YAMAHA

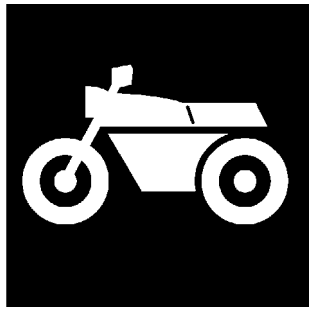

PARTS CATALOGUE
CATALOGO DE REPUESTOS

YZF-R15 (2PB1) ANGOLA
YZF-R15 (2PB1) C SOUTH AMERICA

1M2PB-200S1

( )

YAMAHA
GENUINE
Parts & Accessories

YZF-R15
CATALOGO DE REPUESTOS
©2012 por Yamaha Motor Co., Ltd.
1ª edición, febrero 2012
Todos los derechos reservados.
Toda reproducción o uso no autorizado
sin el consentimiento escrito de
Yamaha Motor Co., Ltd.
quedan expresamente prohibidos
Impreso en Japón.

YZF-R15
PARTS CATALOGUE
©2012 by Yamaha Motor Co., Ltd.
1st edition, February 2012
All rights reserved.
Any reprinting or unauthorized use
without the written permission of
Yamaha Motor Co., Ltd.
is expressly prohibited.
Printed in Japan.

PROLOGO

Este catálogo de repuestos corresponde a las piezas para el o los modelos que figuran en la página de portada. Al formular el pedido de repuestos, se ruega citar este catálogo y especificar correctamente el número y el nombre de las piezas.

1. Las modificaciones y agregados que se hayan realizado después de la edición de este Catálogo de Repuestos, serán anunciados en las Informaciones de Recambios.
   Es recomendable que se hagan las correcciones necesarias en el Catálogo de Repuestos de acuerdo con las Informaciones de Recambios.

2. Abreviaciones
   En este. Catálogo de Repuestos se emplean las siguientes abreviaciones.

   "UR" Usar el número de partes especificado
   "UN" Usar la cantidad necesaria
   "AP" Piezas sustitutivas
   "LM" Fabricación local (Hay que pedir los repuestos en las cercanías)
   "F#" Nº de bastidor (Nº aplicable a la máquina)
   "O/S" Sobredimensionado

3. La cantidad de componentes para el montaje
   - Los componentes, suministrados como conjunto, se describen con un punto (.) que precede al nombre del parte como se indica a continuación.
   - La numeración que aparece a la derecha de cada descripción indica la cantidad de partes por cada unidad de conjunto.

CODIGO Nº	DESCRIPCION	CANT.	OBSERVACIONES
2F5–83310–60	ENSAMBLAJE DE LA LUZ	2	
115–83311–60	.BOMBILLA (6V–18W)	1	

4. Los colores de los componentes se indican como sigue en la columna de "OBSERVACIONES".

CODIGO Nº	DESCRIPCION	CANT.	OBSERVACIONES
2N4–24110–00–X5	COMP. DEL TANQUE	2	MXR
3J1–24240–10	.GRAFICO, DEL TANQUE	1	PARA MXR

5. Debe tenerse en cuenta que las ilustraciones sirven como guia para la búsqueda de los números de partes y no deben usarse para el montaje. Durante el montaje, se recomienda usar el manual de taller correspondiente.

6. EL asterisco (*) antes del número de referencia indica los elementos modificados después de la primera edición.

FOREWORD

This Parts Catalogue is related to the parts for the model(s) on the cover page. When you are ordering replacement parts, please refer to this Parts Catalogue and quote both part numbers and part names correctly.

1. Modifications or additions which have been made after the issue of the Parts Catalogue will be announced in the Parts News.
   It is advisable that you make the necessary corrections to the Parts Catalogue according to the Parts News.

2. Abbreviations
   The following abbreviations are used in this Parts Catalogue.

   “UR” Use specified parts number.
   “UN” Use as many as needed.
   “AP” Alternate Parts
   “LM” Locally Made (Parts need to be ordered locally)
   “F#” Frame No. (Applicable machine No.)
   “O/S” Over Size

3. The number of components for assembly
   - Parts, which are to be supplied in an assembly, are listed with a dot (.) in front of the part name as shown below.
   - The numeral appearing to the right of each component part indicates the quantity of parts for each assembly unit.

PART NO.	DESCRIPTION	Q’TY	REMARKS
2F5–83310–60	FRONT FLASHER LIGHT ASSY	2	
115–83311–60	.BULB (6V–18W)	1	

4. Applicable colours of graphics are represented in the “REMARKS” as shown below.

PART NO.	DESCRIPTION	Q’TY	REMARKS
2N4–24110–00–X5	FUEL TANK COMP.	2	MXR
3J1–24240–10	.GRAPHIC, FUEL TANK	1	FOR MXR

5. Note that the illustrations for reference in finding parts numbers are not to be used for assembling. When assembling, please use the applicable service manual.

6. The asterisk (*) before a reference number indicates modified items after the first edition.

7. Números de serie

Nº de Serie del bastidor

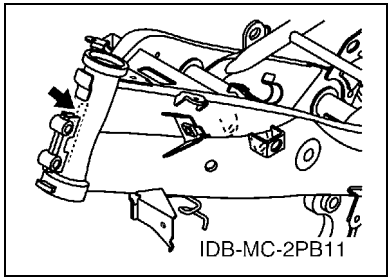

Nº de Serie del motor

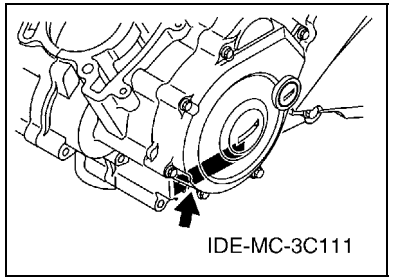

8. Códigos de color aplicables (El símbolo (*) muestra el color de modelo.)

Abreviatura	Nombre de color	Código de color
BWC1	BLUISH WHITE COCKTAIL 1	0390
DBNM8	DARK BLUISH GRAY METALLIC 8	0919
DPBMY(*)	DEEP PURPLISH BLUE METALLIC Y	1115
SMX(*)	BLACK METALLIC X	0903
VRC1(*)	VIVID RED COCKTAIL 1	0121
YB	YAMAHA BLACK	0033

9. Informacion para la columna de cantidades

Columna Nº	Nombre de la columna de cantidades	Destino
1	COL	COL
2	CRI	CRI,GTM,MEX,PER
3	ARG	ARG
4	AGO	AGO

10. Nº de serie inicial aplicable

Nº de Serie del bastidor

Nº de serie	Nombre de la columna de cantidades	Código de Modelo

Nº de Serie del motor

Nº de serie	Nombre de la columna de cantidades	Código de Modelo

7. Applicable Serial No.

Frame Serial No.

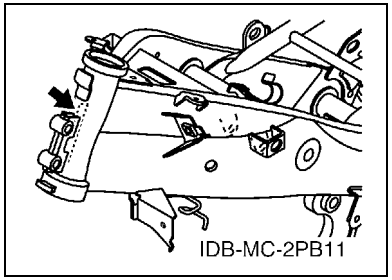

Engine Serial No.

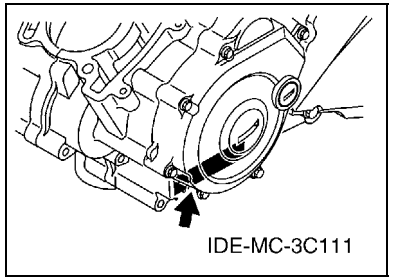

8. Applicable Colour Code (The (*) mark shows Model colour.)

Abbreviation	Colour Name	Colour Code
BWC1	BLUISH WHITE COCKTAIL 1	0390
DBNM8	DARK BLUISH GRAY METALLIC 8	0919
DPBMY(*)	DEEP PURPLISH BLUE METALLIC Y	1115
SMX(*)	BLACK METALLIC X	0903
VRC1(*)	VIVID RED COCKTAIL 1	0121
YB	YAMAHA BLACK	0033

9. Quantity Column Information

Column No.	Name Of Q'ty Column	Destination
1	COL	COL
2	CRI	CRI,GTM,MEX,PER
3	ARG	ARG
4	AGO	AGO

10. Applicable Starting Serial No.

Frame Serial No.

Serial No.	Name Of Q'ty Column	Model Code

Engine Serial No.

Serial No.	Name Of Q'ty Column	Model Code

CONTENIDO

MOTOR

CILINDRO 1
CIGUENAL & PISTON 2
VALVULA 3
ARBOL DE LEVAS & CADENA 4
BOMBA DE AGUA 5
RADIADOR & MANGUERA 6
BOMBA DE ACEITE 7
ADMISION 8
DESCARGA 10
CARTER 11
CUBIERTA DE CARTER 1 12
EMBRAGUE DEL ARRANQUE 13
EMBRAGUE 14
TRANSMISION 15
LEVA DE CAMBIO & HORQUILLA 17
EJE DE CAMBIO & PEDAL 18

SHASIS

CUADRO 19
GUARDABARRO 20
CUBIERTA LATERAL 21
BRAZO TRASERO & SUSPENSION 23
DIRECCION 24
HORQUILLA DELANTERA 25
DEPOSITO DE COMBUSTIBLE 27
ASIENTO 28
RUEDA DELANTERA 29
CALIBRE FRENO DELANTERA 30
RUEDA TRASERA 31
CALIBRE FRENO TRASERA 33
MANILLAR & CABLE 34
CILINDRO MAESTRO DELANTERO 35
SOPORTE & APOYAPIE 36
CILINDRO MAESTRO TRASERO 38
PATA PROTEGIDA 39
PARABRISAS 40
GENERADOR 43
MOTOR DE ARRANQUE 44
LUZ DE DESTELLADOR 45
MEDIDOR 47
FARO DELANTERO 48
LUZ DE COLA 49
INTERRUPTOR DE MANILLAR&PALANC 50
EQUIPO ELECTRICO 1 51
EQUIPO ELECTRICO 2 52

INDICE

INDICE NUMERICO 54

CONTENTS

ENGINE

CYLINDER 1
CRANKSHAFT & PISTON 2
VALVE 3
CAMSHAFT & CHAIN 4
WATER PUMP 5
RADIATOR & HOSE 6
OIL PUMP 7
INTAKE 8
EXHAUST 10
CRANKCASE 11
CRANKCASE COVER 1 12
STARTER CLUTCH 13
CLUTCH 14
TRANSMISSION 15
SHIFT CAM & FORK 17
SHIFT SHAFT 18

CHASSIS

FRAME 19
FENDER 20
SIDE COVER 21
REAR ARM & SUSPENSION 23
STEERING 24
FRONT FORK 25
FUEL TANK 27
SEAT 28
FRONT WHEEL 29
FRONT BRAKE CALIPER 30
REAR WHEEL 31
REAR BRAKE CALIPER 33
STEERING HANDLE & CABLE 34
FRONT MASTER CYLINDER 35
STAND & FOOTREST 36
REAR MASTER CYLINDER 38
LEG SHIELD 39
WINDSHIELD 40
GENERATOR 43
STARTING MOTOR 44
FLASHER LIGHT 45
METER 47
HEADLIGHT 48
TAILLIGHT 49
HANDLE SWITCH & LEVER 50
ELECTRICAL 1 51
ELECTRICAL 2 52

INDEX

NUMERICAL INDEX 54

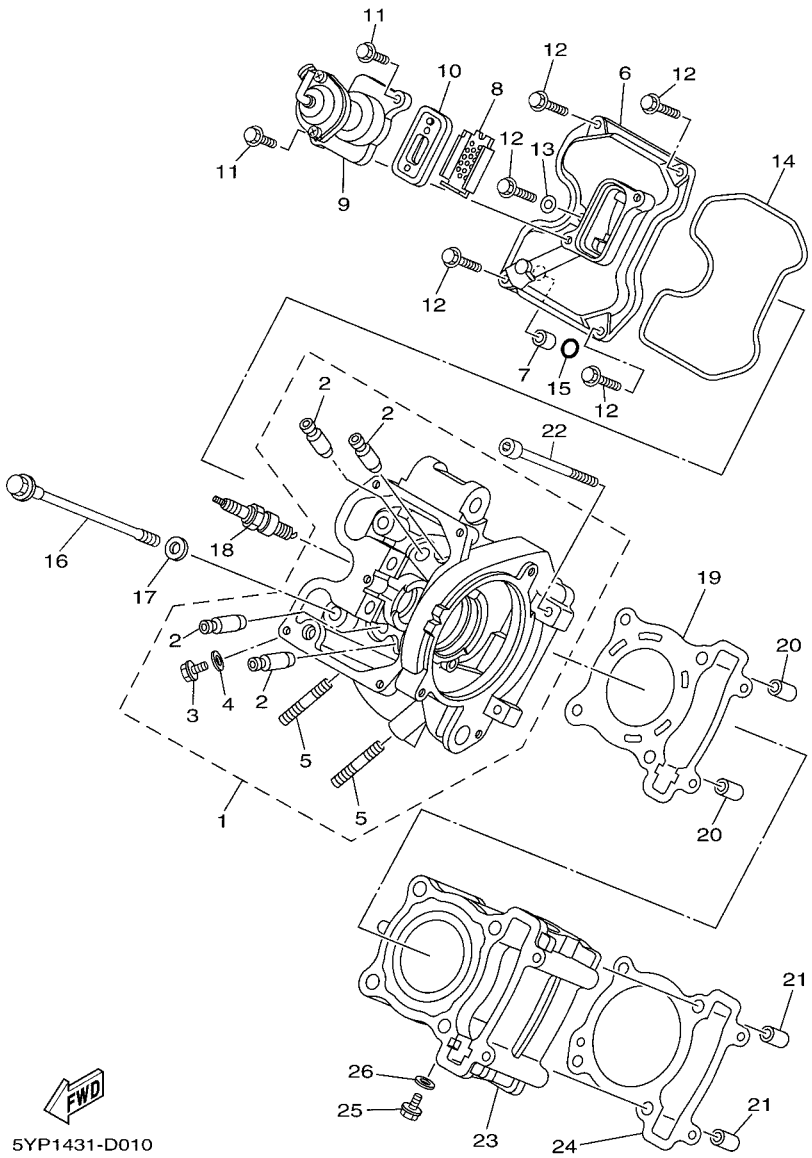

FIG. 1 CILINDRO — CYLINDER

REF. Nº	CODIGO Nº PART NO.	DESCRIPCION DESCRIPTION	COL	CRI	ARG	AGO		OBSERVACIONES REMARKS
1	38B–E1102–00	CULATA DE CILINDRO COMPLETA CYLINDER HEAD ASSY	1	1	1	1		
2	1S7–E1133–10	.GUIA DE VALVULA 1 .GUIDE, VALVE 1	4	4	4	4		
3	90153–06002	.TORNILLO HEXAGONAL .SCREW, HEXAGON	1	1	1	1		
4	90430–06014	.JUNTA .GASKET	1	1	1	1		
5	95617–08620	.PERNO DE PUNTAL .BOLT, STUD	2	2	2	2		
6	38B–E1191–00	TAPA CULATA DE CILINDRO 1 COVER, CYLINDER HEAD 1	1	1	1	1		
7	91811–10005	PASADOR DE CLAVIJA PIN, DOWEL	1	1	1	1		
8	5YP–1482K–00	PLACA PLATE	1	1	1	1		
9	1S7–E4840–00	VALVULA, CORTE DE AIRE AIR CUT VALVE ASSY	1	1	1	1		
10	1S7–E4890–00	VALVULA DE LENGUETA COMPLETA REED VALVE ASSY	1	1	1	1		
11	95027–06014	PERNO, DE BRIDA BOLT, FLANGE	2	2	2	2		
12	95027–06020	PERNO, DE BRIDA BOLT, FLANGE	5	5	5	5		
13	90430–06014	JUNTA GASKET	1	1	1	1		
14	38B–E1193–00	EMPAQUE GASKET, HEAD COVER 1	1	1	1	1		
15	93210–11808	ANILLO O O-RING	1	1	1	1		
16	90105–08850	TORNILLO BOLT, FLANGE	4	4	4	4		
17	90201–08609	ARANDELA PLANA WASHER, PLATE	4	4	4	4		
18	94703–00883	BUJIA (NGK CR8E) PLUG, SPARK (NGK CR8E)	1	1	1	1		
19	1CK–E1181–00	JUNTA, DE CULATA 1 GASKET, CYLINDER HEAD 1	1	1	1	1		
20	91810–14809	PASADOR DE CLAVIJA PIN, DOWEL	2	2	2	2		
21	91810–14809	PASADOR DE CLAVIJA PIN, DOWEL	2	2	2	2		
22	91317–06100	PERNO BOLT	2	2	2	2		
23	3C1–E1311–00	CILINDRO 1 CYLINDER 1	1	1	1	1		
24	38B–E1351–00	JUNTA, DE CILINDRO GASKET, CYLINDER	1	1	1	1		
25	90153–06002	TORNILLO HEXAGONAL SCREW, HEXAGON	1	1	1	1		
26	90430–06014	JUNTA GASKET	1	1	1	1		

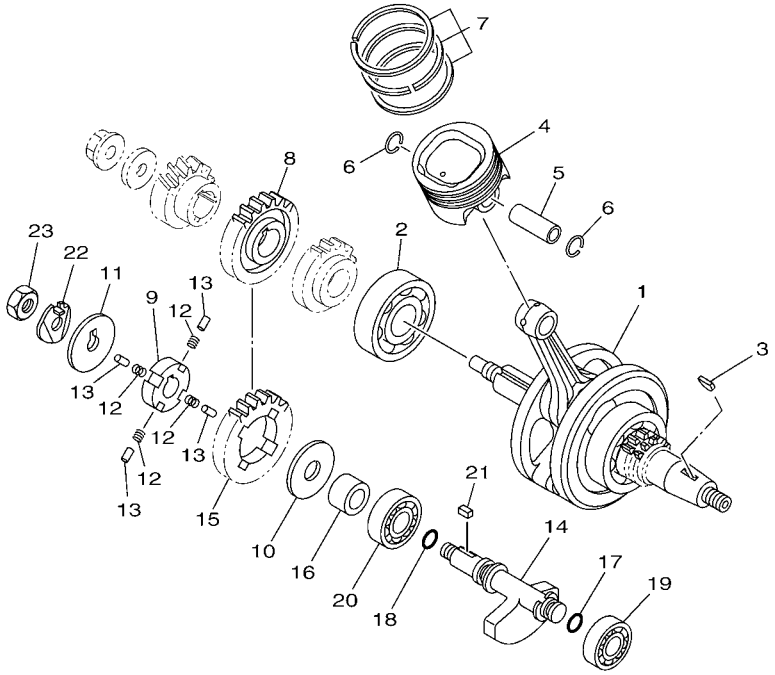

1CK1470-K020

FIG. 2 CIGUENAL & PISTON — CRANKSHAFT & PISTON

REF. Nº	CODIGO Nº PART NO.	DESCRIPCION DESCRIPTION	COL	CRI	ARG	AGO		OBSERVACIONES REMARKS
1	1CK–E1400–09	CIGUENAL COMPLETO CRANKSHAFT ASSY	1	1	1	1		
2	93306–305X7	COJINETE BEARING	1	1	1	1		
3	90280–03017	CUNA WOODRUFF KEY, WOODRUFF	1	1	1	1		
4	3C1–E1631–11	PISTON (NORMA) PISTON (STD)	1	1	1	1		
5	38B–E1633–00	PASADOR, PISTON PIN, PISTON	1	1	1	1		
6	93450–16115	SEGURO CIRCLIP	2	2	2	2		
7	3C1–11603–00	JUEGO DE ANILLOS (NORMA) PISTON RING SET (STD)	1	1	1	1		
8	38B–E1536–10	ENGRANAJE TRACCION GEAR, DRIVE	1	1	1	1		
9	21C–E1496–20	COPA TOPE BOSS, BUFFER	1	1	1	1		
10	90201–15022	ARANDELA PLANA WASHER, PLATE	1	1	1	1		
11	90214–10006	ARANDELA DE POSICION WASHER, CLAW	1	1	1	1		
12	54B–E1476–00	RESORTE SPRING	4	4	4	4		
13	21C–E3362–00	RODILLO ROLLER	4	4	4	4		
14	38B–E1454–00	PESO 1 WEIGHT 1	1	1	1	1		
15	21C–E1531–00	ENGRANAJE CONTRAPESO GEAR, BALANCE WEIGHT	1	1	1	1		
16	90387–15810	ESPACIADOR COLLAR	1	1	1	1		
17	93210–11807	ANILLO O O-RING	1	1	1	1		
18	93210–13804	ANILLO O O-RING	1	1	1	1		
19	93306–202YD	COJINETE BEARING	1	1	1	1		
20	93306–203XS	COJINETE BEARING	1	1	1	1		
21	90282–05031	CHAVETA, RECTA KEY, STRAIGHT	1	1	1	1		
22	90215–10284	ARANDELA DE CIERRE WASHER, LOCK	1	1	1	1		
23	90170–10012	TUERCA NUT	1	1	1	1		

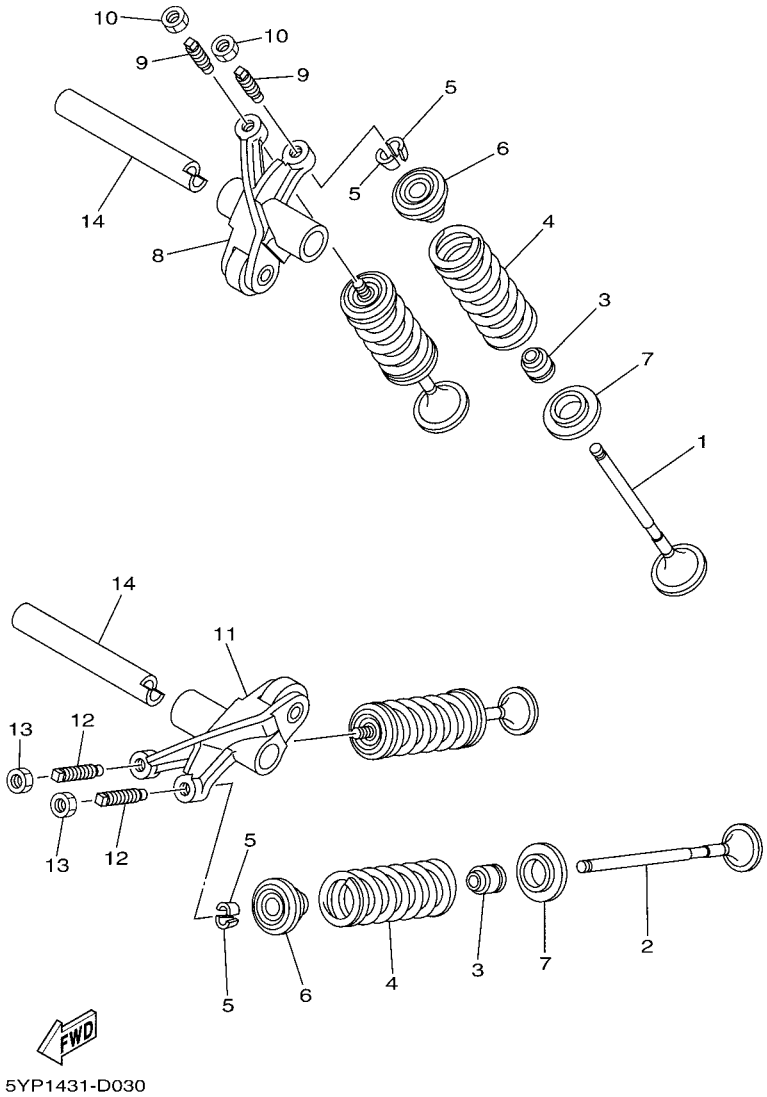

FIG. 3 VALVULA — VALVE

REF. Nº	CODIGO Nº PART NO.	DESCRIPCION DESCRIPTION	COL	CRI	ARG	AGO		OBSERVACIONES REMARKS
1	5YP–E2111–00	VALVULA DE ADMISION VALVE, INTAKE	2	2	2	2		
2	5YP–E2121–00	VALVULA DE ESCAPE VALVE, EXHAUST	2	2	2	2		
3	38B–E2119–00	SELLO DE ACEITE VALVULA SEAL, VALVE STEM	4	4	4	4		
4	38B–E2113–00	RESORTE VALVULA INTERNA SPRING, VALVE INNER	4	4	4	4		
5	1WG–12118–00	SEGURO DE VALVULA COTTER, VALVE	8	8	8	8		
6	5YP–12117–00	RETEN RESORTE DE VALVULA RETAINER, VALVE SPRING	4	4	4	4		
7	38B–E2126–00	ASIENTO RESORTE DE VALVULA2 SEAT, VALVE SPRING 2	4	4	4	4		
8	38B–E2151–00	BRAZO DE BALANCIN DE VALVULA ARM, VALVE ROCKER	1	1	1	1		
9	3C1–12159–01	TORNILLO DE AJUSTE DE VALVULA SCREW, VALVE ADJUSTING	2	2	2	2		
10	90170–05302	TUERCA NUT	2	2	2	2		
11	38B–E2161–00	BRAZO DE BALANCIN DE VALVULA ARM, VALVE ROCKER 2	1	1	1	1		
12	3C1–12159–01	TORNILLO DE AJUSTE DE VALVULA SCREW, VALVE ADJUSTING	2	2	2	2		
13	90170–05302	TUERCA NUT	2	2	2	2		
14	5YP–E2156–00	EJE DE BALANCIN SHAFT, ROCKER 2	2	2	2	2		

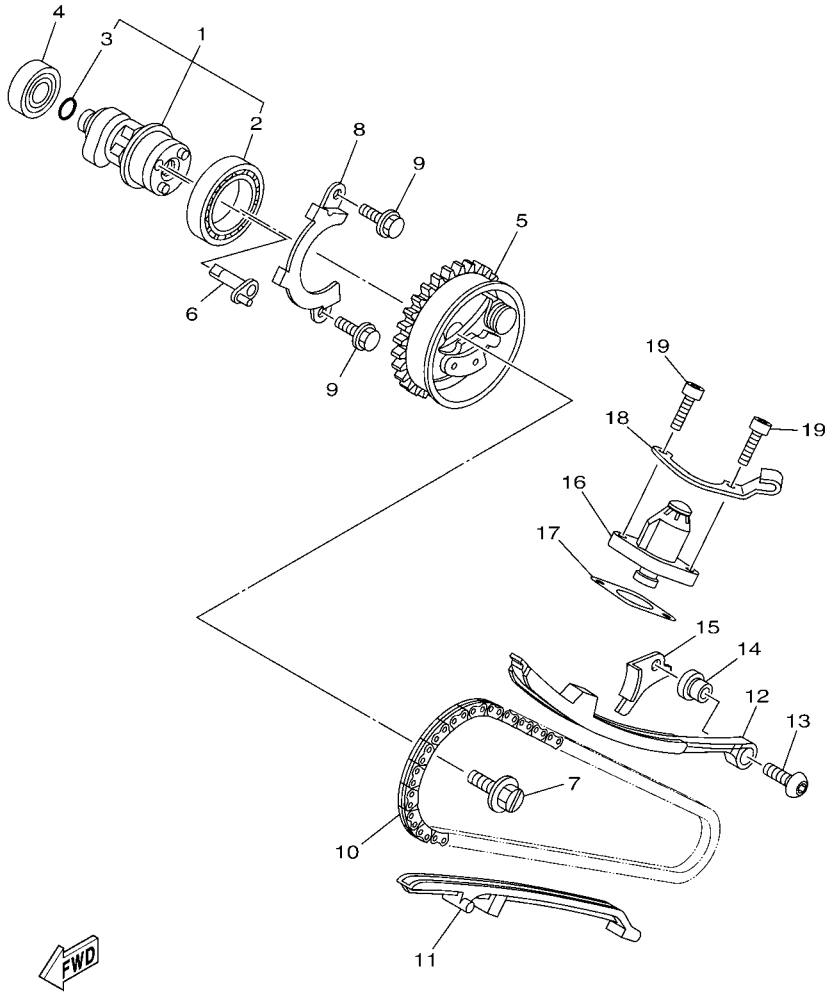

38B1470-H040

FIG. 4 ARBOL DE LEVAS & CADENA CAMSHAFT & CHAIN

REF. Nº	CODIGO Nº PART NO.	DESCRIPCION DESCRIPTION	COL	CRI	ARG	AGO		OBSERVACIONES REMARKS
1	38B–E2170–00	ARBOL DE LEVAS COMPLETO 1 CAMSHAFT ASSY 1	1	1	1	1		
2	93306–906Y0	.COJINETE .BEARING	1	1	1	1		
3	93210–09809	.ANILLO O .O-RING	1	1	1	1		
4	93306–001X7	COJINETE BEARING	1	1	1	1		
5	38B–E2280–10	EQUIPO DE DESCOMPRESION DECOMPRESSION ASSY	1	1	1	1		
6	5YP–E2288–00	LEVA DE DESCOMPRESION CAM, DECOMPRESSION	1	1	1	1		
7	5YP–E2157–00	PERNO BOLT	1	1	1	1		
8	38B–E111F–00	PLACA PLATE	1	1	1	1		
9	95027–06010	PERNO, DE BRIDA BOLT, FLANGE	2	2	2	2		
10	94568–A8096	CADENA CHAIN	1	1	1	1		
11	38B–E2231–00	TOPE DE GUIA 1 GUIDE, STOPPER 1	1	1	1	1		
12	38B–E2241–00	TOPE DE GUIA 2 GUIDE, STOPPER 2	1	1	1	1		
13	90149–06829	TORNILLO DE REGLAJE SCREW	1	1	1	1		
14	38B–E5598–00	COLLAR COLLAR	1	1	1	1		
15	38B–E2256–00	CUBIERTA DE CADENA COVER, CHAIN	1	1	1	1		
16	38B–E2210–00	TENSOR CADENA DE LEVA TENSIONER ASSY, CAM CHAIN	1	1	1	1		
17	1CK–E2213–00	EMPAQUE DE CAJA TENSOR GASKET, TENSIONER CASE	1	1	1	1		
18	38B–E5441–00	SOSTEN DE CABLE DE EMBRAGUE HOLDER, CLUTCH CABLE	1	1	1	1		
19	91317–06020	PERNO BOLT	2	2	2	2		

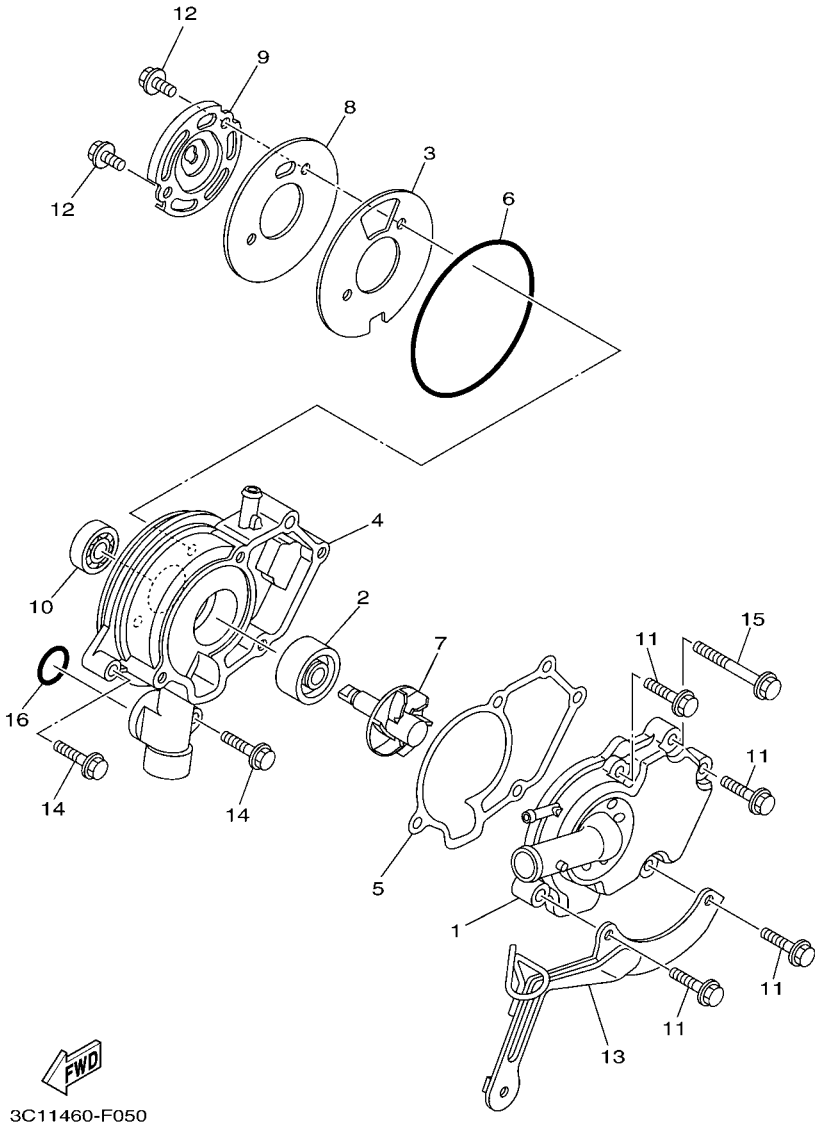

FIG. 5 BOMBA DE AGUA WATER PUMP

REF. Nº	CODIGO Nº PART NO.	DESCRIPCION DESCRIPTION	COL	CRI	ARG	AGO		OBSERVACIONES REMARKS
1	38B–E2422–00	CUBIERTA DE CAJA COVER, HOUSING	1	1	1	1		
2	93103–10804	SELLO ACEITE OIL SEAL	1	1	1	1		
3	38B–E2428–00	JUNTA, DE CBTA.CAJA 2 GASKET, HOUSING COVER 2	1	1	1	1		
4	38B–E1185–00	CUBIERTA CULATA CIL.LAT.3 COVER, CYLINDER HEAD SIDE 3	1	1	1	1		
5	38B–E1196–00	EMPAQUE DE CULATA GASKET, CYLINDER HEAD SIDE	1	1	1	1		
6	93210–84802	ANILLO O O-RING	1	1	1	1		
7	38B–E2450–00	EJE IMPULSOR COMPLETO IMPELLER SHAFT ASSY	1	1	1	1		
8	38B–E1951–00	PLACA PLATE	1	1	1	1		
9	38B–E1952–00	PLACA PLATE	1	1	1	1		
10	93306–000Y5	COJINETE BEARING	1	1	1	1		
11	95027–06025	PERNO, DE BRIDA BOLT, FLANGE	4	4	4	4		
12	95027–06012	PERNO, DE BRIDA BOLT, FLANGE	2	2	2	2		
13	38B–E2443–00	APOYO STAY	1	1	1	1		
14	95027–06025	PERNO, DE BRIDA BOLT, FLANGE	2	2	2	2		
15	95027–06050	PERNO, DE BRIDA BOLT, FLANGE	1	1	1	1		
16	93210–19809	ANILLO O O-RING	1	1	1	1		

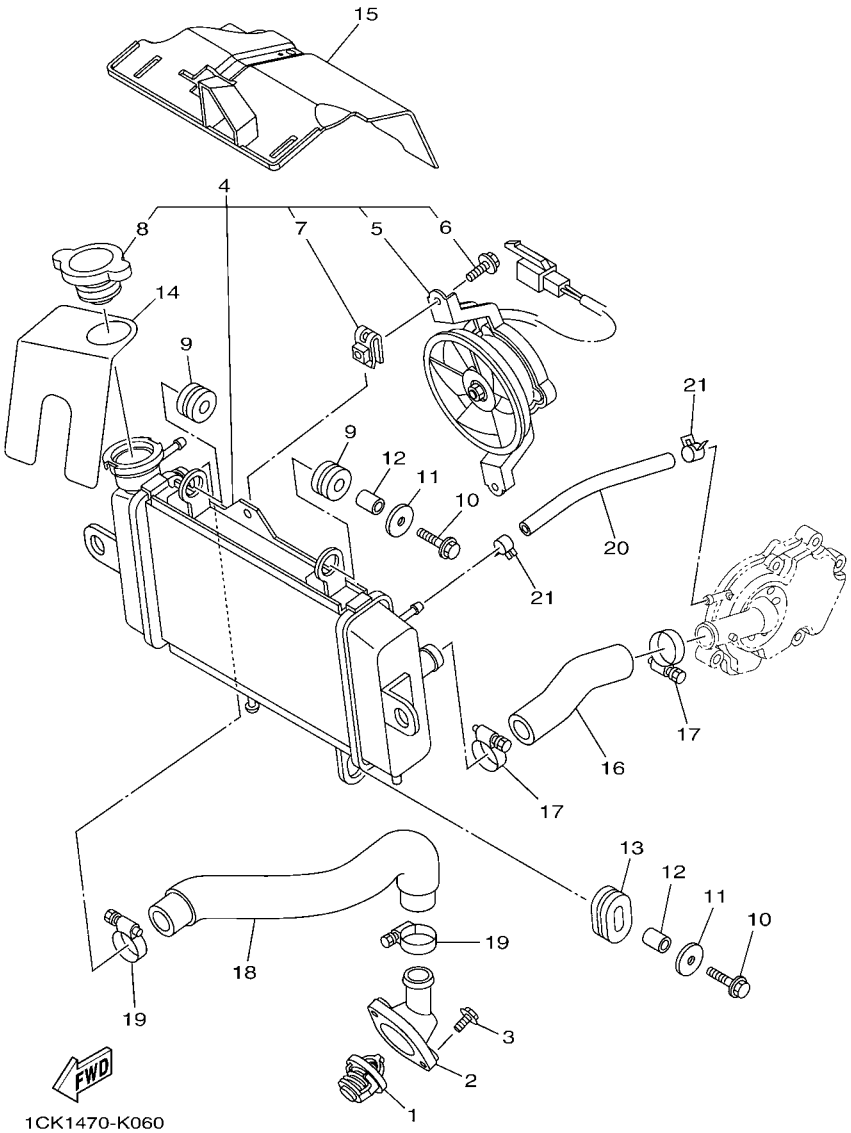

FIG. 6 RADIADOR & MANGUERA RADIATOR & HOSE

REF. Nº	CODIGO Nº PART NO.	DESCRIPCION DESCRIPTION	COL	CRI	ARG	AGO		OBSERVACIONES REMARKS
1	1CK–E2411–00	TERMOSTAT THERMOSTAT	1	1	1	1		
2	38B–E2413–00	CUBIERTA TERMOSTATO COVER, THERMOSTAT	1	1	1	1		
3	95027–06020	PERNO, DE BRIDA BOLT, FLANGE	2	2	2	2		
4	38B–E240A–00	RADIADOR COMPLETO RADIATOR ASSY	1	1	1	1		
5	5YP–E2405–00	.COMPRESOR .BLOWER ASSY	1	1	1	1		
6	5YP–E2675–00	.PERNO, SUJECION VENTILADOR .BOLT, BLOWER HOLDING	2	2	2	2		
7	5YP–E2671–00	.TUERCA 1 .NUT 1	2	2	2	2		
8	5ST–E2590–00	.TAPON, DEL RADIADOR .CAP, RADIATOR	1	1	1	1		
9	90480–15363	TAPON GROMMET	2	2	2	2		
10	95827–06025	TORNILLO BOLT, FLANGE	2	2	2	2		
11	90201–06072	ARANDELA PLANA WASHER, PLATE	2	2	2	2		
12	90387–064W3	ESPACIADOR COLLAR	2	2	2	2		
13	90480–01803	TAPON GROMMET	1	1	1	1		
14	1CK–E246A–00	CUBIERTA 1 COVER 1	1	1	1	1		
15	20P–E2467–01	CUBIERTA DEL RADIADOR COVER, RADIATOR	1	1	1	1		
16	20P–E2481–00	TUBO 1 PIPE 1	1	1	1	1		
17	90450–27803	BRIDA, MANGUERA HOSE CLAMP ASSY	2	2	2	2		
18	20P–E2482–00	TUBO 2 PIPE 2	1	1	1	1		
19	90450–27803	BRIDA, MANGUERA HOSE CLAMP ASSY	2	2	2	2		
20	90445–12804	TUBO HOSE	1	1	1	1		
21	90467–10808	PRESILLA CLIP	2	2	2	2		

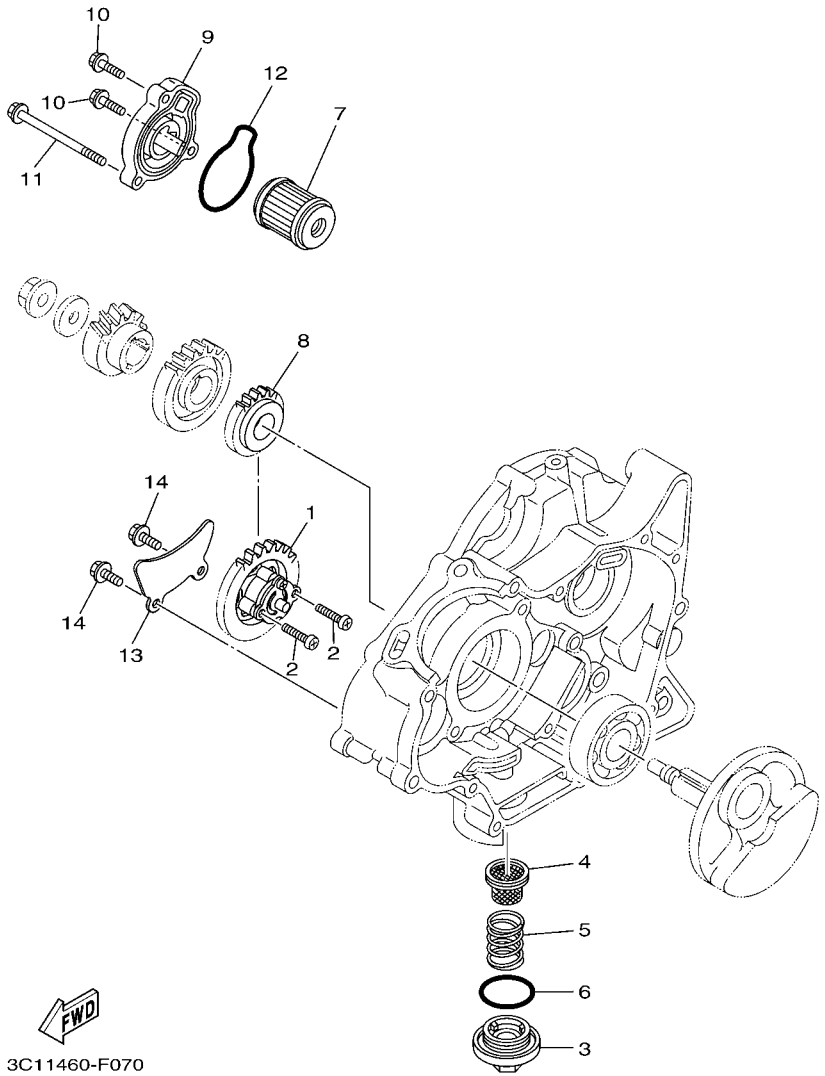

FIG. 7 BOMBA DE ACEITE OIL PUMP

REF. Nº	CODIGO Nº PART NO.	DESCRIPCION DESCRIPTION	COL	CRI	ARG	AGO		OBSERVACIONES REMARKS
1	38B–E3300–00	BOMBA DE ACEITE COMPLETA OIL PUMP ASSY	1	1	1	1		
2	98507–05025	TORNILLO DE CABEZA PLANA SCREW, PAN HEAD	2	2	2	2		
3	38B–E5351–00	TAPON DE DRENAJE PLUG, DRAIN	1	1	1	1		
4	38B–E3411–00	FILTRO DE ACEITE STRAINER, OIL	1	1	1	1		
5	90501–18576	RESORTE DE COMPRESION SPRING, COMPRESSION	1	1	1	1		
6	93210–34805	ANILLO O O-RING	1	1	1	1		
7	38B–E3440–00	ELEMENTO FILTRO DE ACEITE ELEMENT ASSY, OIL CLEANER	1	1	1	1		
8	38B–E3324–00	ENGRANAJE TRACC. DE BOMBA GEAR, PUMP DRIVE	1	1	1	1		
9	38B–E3447–00	TAPA DEL ELEMENTO COVER, OIL ELEMENT	1	1	1	1		
10	95022–06020	PERNO, DE BRIDA BOLT, FLANGE	2	2	2	2		
11	95022–06080	PERNO, DE BRIDA BOLT, FLANGE	1	1	1	1		
12	93210–54806	ANILLO O O-RING	1	1	1	1		
13	38B–E3327–00	CUBIERTA ENGRANAJE DE BOMBA COVER, PUMP GEAR	1	1	1	1		
14	95022–06012	PERNO, DE BRIDA BOLT, FLANGE	2	2	2	2		

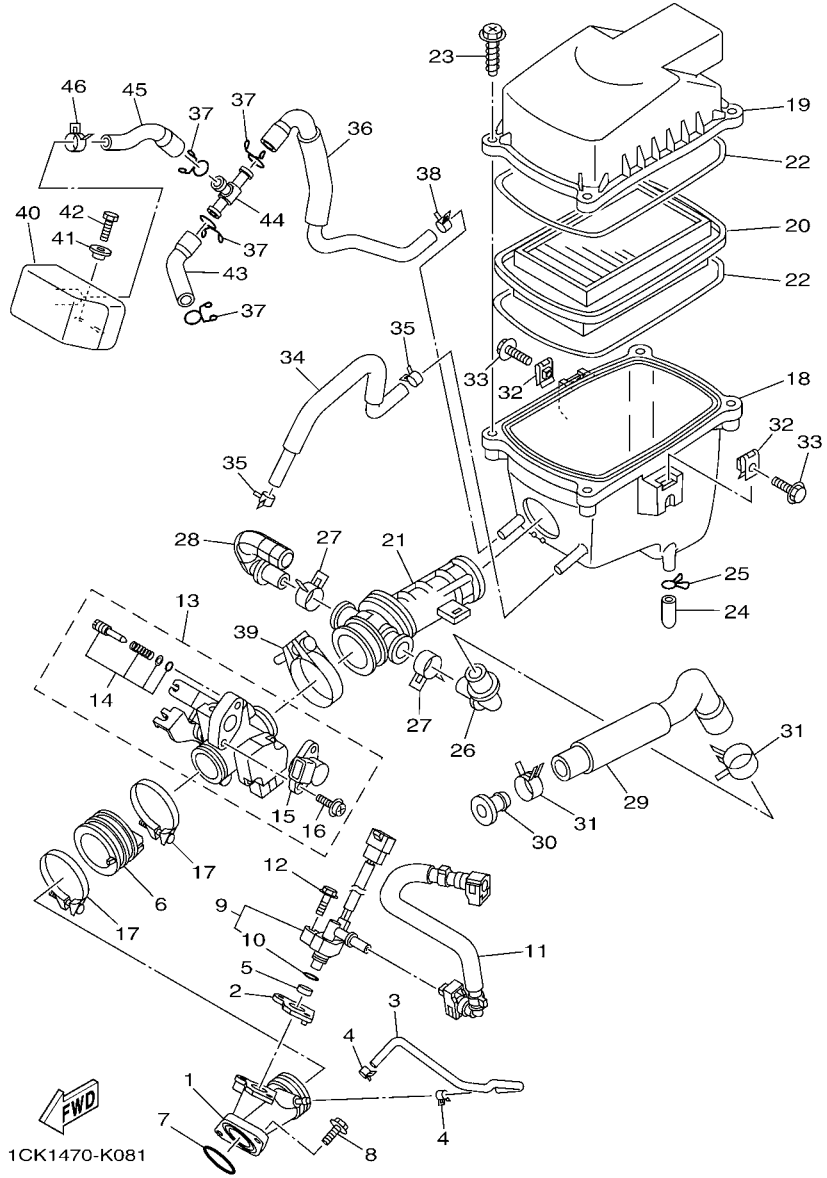

FIG. 8 ADMISION INTAKE

REF. Nº	CODIGO Nº PART NO.	DESCRIPCION DESCRIPTION	COL	CRI	ARG	AGO		OBSERVACIONES REMARKS
1	38B–E3585–00	MULTIPLE MANIFOLD	1	1	1	1		
2	38B–E3556–00	EMPAQUE GASKET, MANIFOLD	1	1	1	1		
3	38B–E3542–00	MANGUERA, DE VACIO 1 HOSE, VACUUM SENSING 1	1	1	1	1		
4	90467–08808	PRESILLA CLIP	2	2	2	2		
5	90430–09803	JUNTA GASKET	1	1	1	1		
6	38B–E3586–00	TOBERA DE CARBURADOR 1 JOINT, CARBURETOR 1	1	1	1	1		
7	93210–32807	ANILLO O O-RING	1	1	1	1		
8	95022–06020	PERNO, DE BRIDA BOLT, FLANGE	2	2	2	2		
9	3C1–13770–10	INYECTOR INJECTOR ASSY	1	1	1	1		
10	5CA–14147–00	.ANILLO O .O-RING	1	1	1	1		
11	3C1–13971–00	ANILLO DE ESPACIADOR PIPE, FUEL 1	1	1	1	1		
12	95817–06030	TORNILLO BOLT, FLANGE	1	1	1	1		
13	1CK–E3750–00	CAJA DE ACELERADOR COMPL. THROTTLE BODY ASSY	1	1	1	1		
14	5JW–14104–00	.CJTO. TORNNILLO DE AIRE .AIR SCREW SET	1	1	1	1		
15	2S5–1410H–00	.SOLENOIDE VALVULA .FUEL CUT SOLENOID VALVE	1	1	1	1		
16	1S4–14216–00	.TORNILLO .SCREW	2	2	2	2		
17	38B–E3575–00	BANDA BAND	2	2	2	2		
18	20P–E4411–00	CAJA FILTRO DEL AIRE 1 CASE, AIR CLEANER 1	1	1	1	1		
19	20P–E4412–00	TAPA CAJA DEL FILTRO 1 CAP, CLEANER CASE 1	1	1	1	1		
20	20P–E4450–00	ELEMENTO COMP.FILTRO DE AIRE ELEMENT ASSY, AIR CLEANER	1	1	1	1		
21	20P–E4453–00	UNION DEL FILTRO DEL AIRE 1 JOINT, AIR CLEANER 1	1	1	1	1		
22	3C1–E4452–00	SELLO SEAL	2	2	2	2		
23	90163–05803	TORNILLO ROSCA HEMBRA SCREW, TAPPING	4	4	4	4		
24	20P–E443E–00	TUBO, DRENAJE PIPE, DRAIN	1	1	1	1		
25	90467–12800	PRESILLA CLIP	1	1	1	1		
26	20P–E4485–00	TUBO DE UNION PIPE, JOINT	1	1	1	1		
27	90467–20050	PRESILLA CLIP	2	2	2	2		

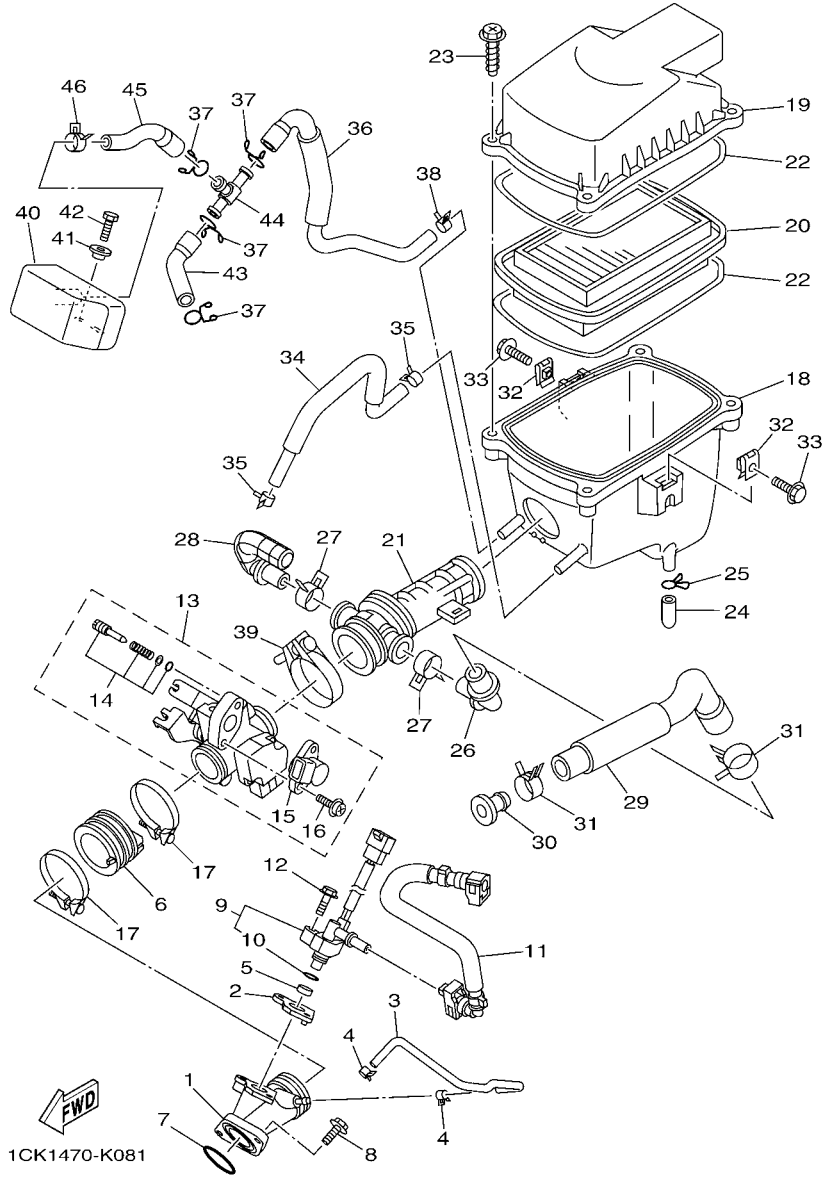

FIG. 8 ADMISION INTAKE

REF. Nº	CODIGO Nº PART NO.	DESCRIPCION DESCRIPTION	COL	CRI	ARG	AGO		OBSERVACIONES REMARKS
28	20P–E4419–00	TUBO PIPE	1	1	1	1		
29	20P–E441J–00	TUBO PIPE, SILENCER	1	1	1	1		
30	90338–16008	TAPON PLUG	1	1	1	1		
31	90467–23059	PRESILLA CLIP	2	2	2	2		
32	90183–06802	TUERCA DE RESORTE NUT, SPRING	2	2	2	2		
33	90119–06051	TORNILLO CON ARANDELA BOLT, WITH WASHER	2	2	2	2		
34	20P–E1166–00	TUBO RESPIRADERO 1 PIPE, BREATHER 1	1	1	1	1		
35	90467–13816	PRESILLA CLIP	2	2	2	2		
36	20P–E4882–00	TUBO 2 HOSE, BEND 2	1	1	1	1		
37	90467–15012	PRESILLA CLIP	4	4	4	4		
38	90467–13802	PRESILLA CLIP	1	1	1	1		
39	90450–39804	BRIDA, MANGUERA HOSE CLAMP ASSY	1	1	1	1		
40	20P–E4877–00	RESONATOR RESONATOR	1	1	1	1		
41	90387–068S1	ESPACIADOR COLLAR	2	2	2	2		
42	97027–06014	PERNO BOLT, HEXAGON	2	2	2	2		
43	20P–E4881–00	TUBO 1 HOSE, BEND 1	1	1	1	1		
44	90413–13800	UNION WAY 3	1	1	1	1		
45	20P–E4883–00	TUBO 3 HOSE, BEND 3	1	1	1	1		
46	90467–16805	PRESILLA CLIP	1	1	1	1		

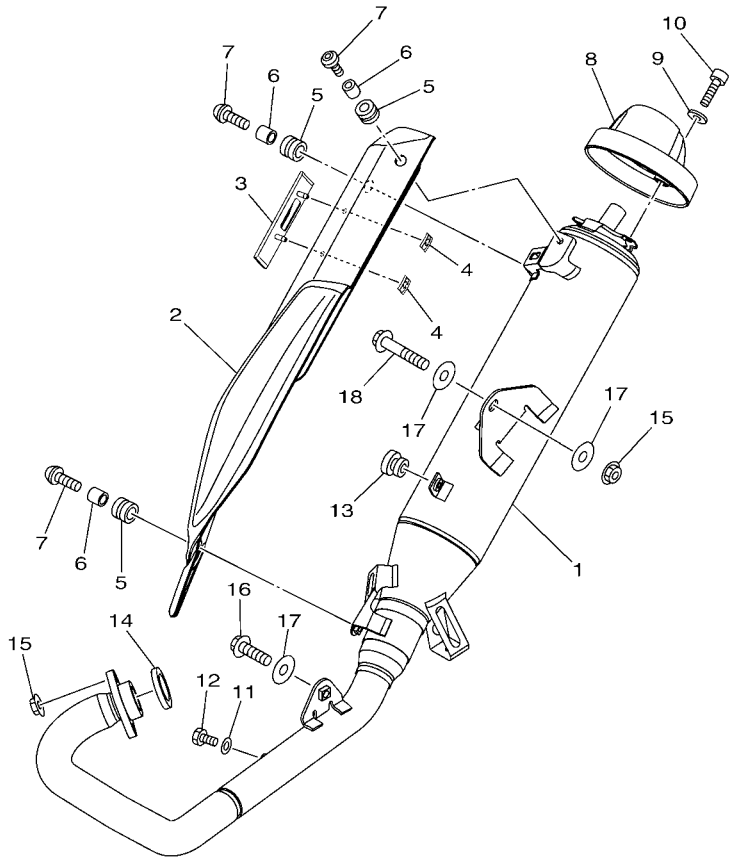

1CK1470-K091

FIG. 9 DESCARGA EXHAUST

REF. Nº	CODIGO Nº PART NO.	DESCRIPCION DESCRIPTION	COL	CRI	ARG	AGO		OBSERVACIONES REMARKS
1	1CK–E4703–00	SILENCIADOR COMPL. 1 MUFFLER COMP. 1	1	1	1	1		
2	1CK–E4718–00	PROTECTOR DE SILENCIADOR 1 PROTECTOR, MUFFLER 1	1	1	1	1		
3	1CK–E4728–00	PROTECTOR DE SILENCIADOR PROTECTOR, MUFFLER 2	1	1	1	1		
4	90183–05M01	TUERCA DE RESORTE NUT, SPRING	2	2	2	2		
5	90480–12581	TAPON GROMMET	3	3	3	3		
6	90387–06023	ESPACIADOR COLLAR	3	3	3	3		
7	90111–06826	TORNILLO BOLT,HEX. SOCKET BUTTON	3	3	3	3		
8	1CK–E4799–00	TAPA CAP	1	1	1	1		
9	92990–06200	ARANDELA PLANA WASHER, PLAIN	3	3	3	3		
10	91380–06016	PERNO BOLT	3	3	3	3		
11	92990–06600	ARANDELA PLANA WASHER, PLATE	1	1	1	1		
12	97080–06008	PERNO BOLT, HEX.	1	1	1	1		
13	90480–10805	TAPON GROMMET	1	1	1	1		
14	21C–E4613–00	JUNTA, TUBO DE ESCAPE GASKET, EXHAUST PIPE	1	1	1	1		
15	95707–08500	TUERCA DE BRIDA NUT, FLANGE	3	3	3	3		
16	95817–08025	TORNILLO BOLT, FLANGE	1	1	1	1		
17	90201–08612	ARANDELA PLANA WASHER, PLATE	3	3	3	3		
18	95817–08040	TORNILLO BOLT, FLANGE	1	1	1	1		

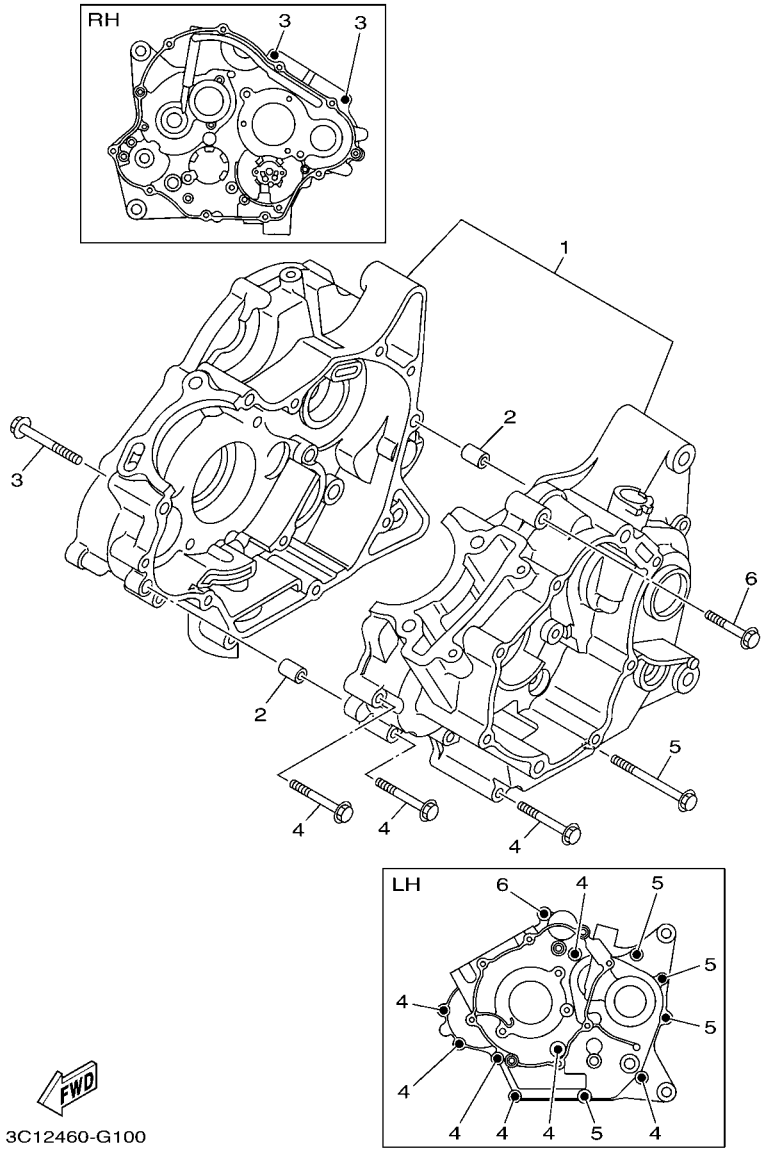

FIG. 10 CARTER — CRANKCASE

REF. Nº	CODIGO Nº PART NO.	DESCRIPCION DESCRIPTION	COL	CRI	ARG	AGO		OBSERVACIONES REMARKS
1	38B–E5150–00	CARTER COMPLETO CRANKCASE ASSY	1	1	1	1		
2	91810–14809	PASADOR DE CLAVIJA PIN, DOWEL	2	2	2	2		
3	95022–06055	PERNO, DE BRIDA BOLT, FLANGE	2	2	2	2		
4	95022–06045	PERNO, DE BRIDA BOLT, FLANGE	7	7	7	7		
5	95022–06070	PERNO, DE BRIDA BOLT, FLANGE	4	4	4	4		
6	95022–06040	PERNO, DE BRIDA BOLT, FLANGE	1	1	1	1		

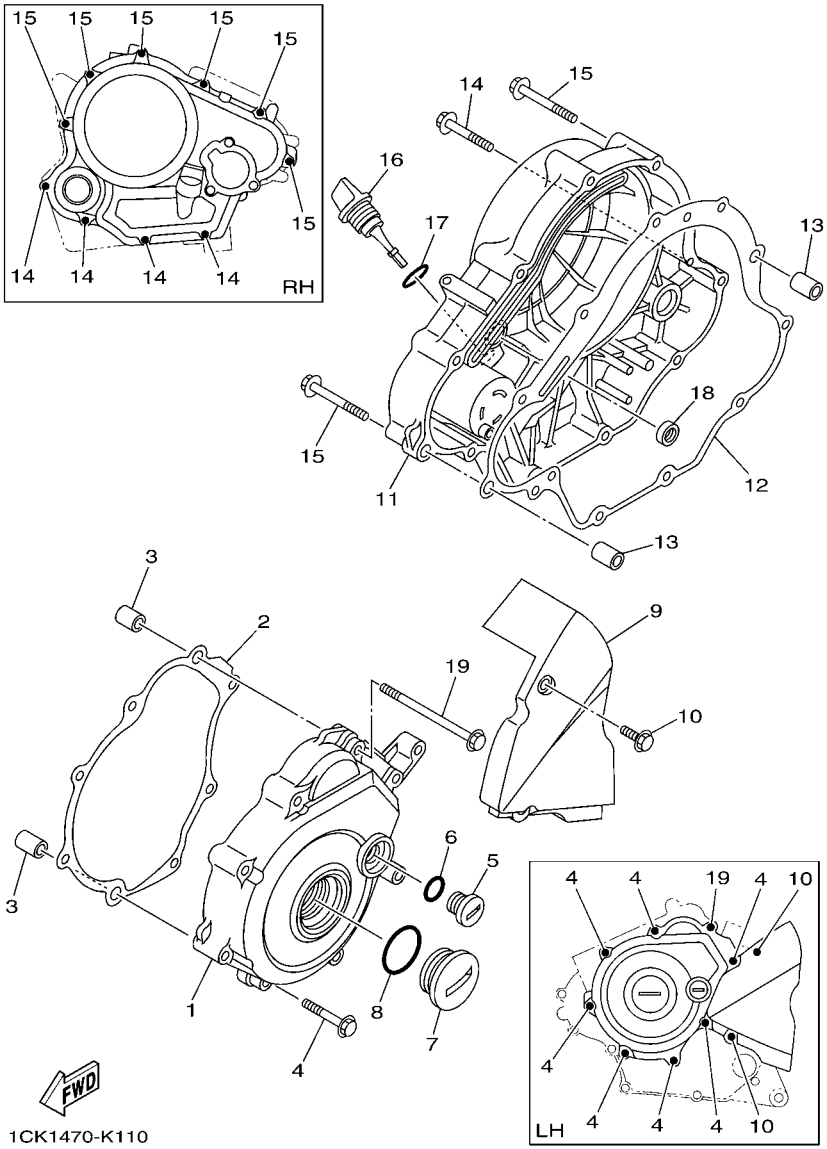

FIG. 11 CUBIERTA DE CARTER 1 CRANKCASE COVER 1

REF. Nº	CODIGO Nº PART NO.	DESCRIPCION DESCRIPTION	COL	CRI	ARG	AGO		OBSERVACIONES REMARKS
1	38B–E5411–00	CUBIERTA DE CARTER 1 COVER, CRANKCASE 1	1	1	1	1		
2	1CK–E5451–00	EMPAQ DE CUBIERTA DE CARTER GASKET, CRANKCASE COVER 1	1	1	1	1		
3	91810–14809	PASADOR DE CLAVIJA PIN, DOWEL	2	2	2	2		
4	95022–06040	PERNO, DE BRIDA BOLT, FLANGE	7	7	7	7		
5	90340–14824	TORNILLO, DE DRENAJE PLUG, STRAIGHT SCREW	1	1	1	1		
6	93210–14812	ANILLO O O-RING	1	1	1	1		
7	90340–32823	TORNILLO, DE DRENAJE PLUG, STRAIGHT SCREW	1	1	1	1		
8	93210–32813	ANILLO O O-RING	1	1	1	1		
9	38B–E5418–00	CUBIERTA CAJA DE CADENA COVER, CHAIN CASE	1	1	1	1		
10	95022–06016	PERNO, DE BRIDA BOLT, FLANGE	2	2	2	2		
11	1CK–E5421–00	TAPA DE CARTER DERECHA COVER, CRANKCASE 2	1	1	1	1		
12	1CK–E5461–00	JUNTA TAPA CARTER DERECHO 2 GASKET, CRANKCASE COVER 2	1	1	1	1		
13	91810–14809	PASADOR DE CLAVIJA PIN, DOWEL	2	2	2	2		
14	95022–06040	PERNO, DE BRIDA BOLT, FLANGE	4	4	4	4		
15	95022–06050	PERNO, DE BRIDA BOLT, FLANGE	6	6	6	6		
16	38B–E5362–00	TAPON DEL NIVEL DE ACEITE PLUG, OIL LEVEL	1	1	1	1		
17	93210–19809	ANILLO O O-RING	1	1	1	1		
18	93101–10805	SELLO ACEITE OIL SEAL	1	1	1	1		
19	95022–06090	PERNO, DE BRIDA BOLT, FLANGE	1	1	1	1		

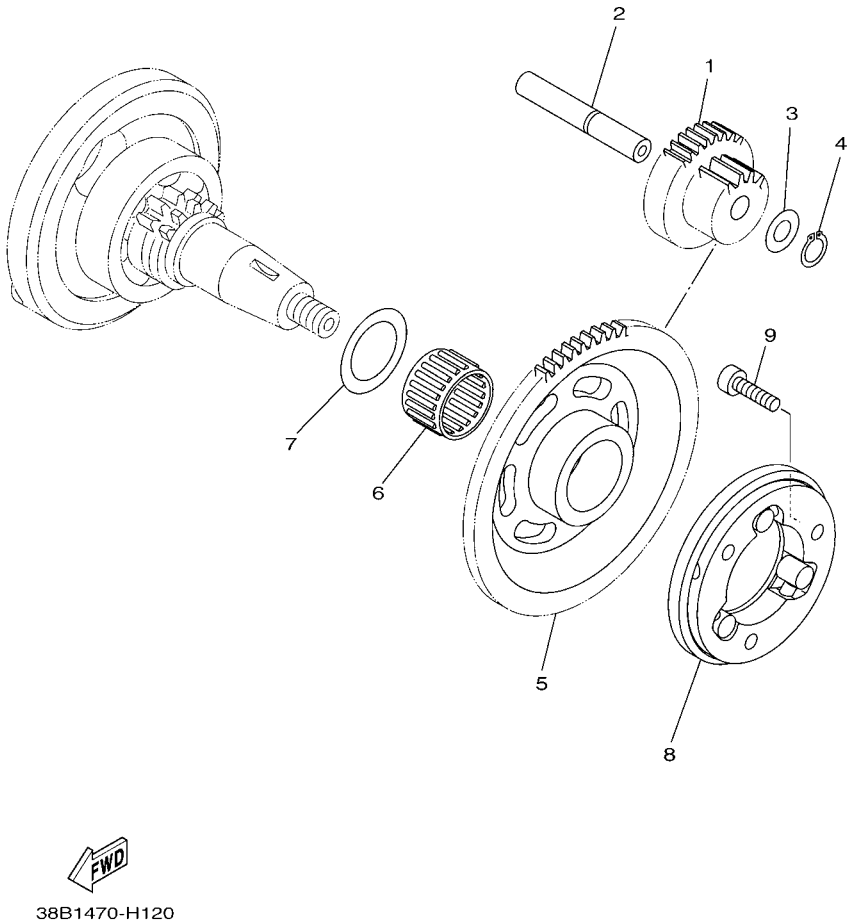

FIG. 12 EMBRAGUE DEL ARRANQUE STARTER CLUTCH

REF. Nº	CODIGO Nº PART NO.	DESCRIPCION DESCRIPTION	COL	CRI	ARG	AGO		OBSERVACIONES REMARKS
1	1CK–E5514–00	ENGRANAJE 2 GEAR 2	1	1	1	1		
2	38B–E5521–00	EJE 1 SHAFT 1	1	1	1	1		
3	90201–105E8	ARANDELA PLANA WASHER, PLATE	1	1	1	1		
4	99009–10400	PRESILLA REDONDA CIRCLIP	1	1	1	1		
5	38B–E5524–10	RUEDA DE ARRANQUE WHEEL, STARTER	1	1	1	1		
6	93310–325X3	COJINETE DE RODILLOS BEARING	1	1	1	1		
7	90201–25290	ARANDELA PLANA WASHER, PLATE	1	1	1	1		
8	54B–E5580–00	ENSAMBLE EXT.EMBRAGUE ARRANQUE STARTER CLUTCH OUTER ASSY	1	1	1	1		
9	91317–06020	PERNO BOLT	3	3	3	3		

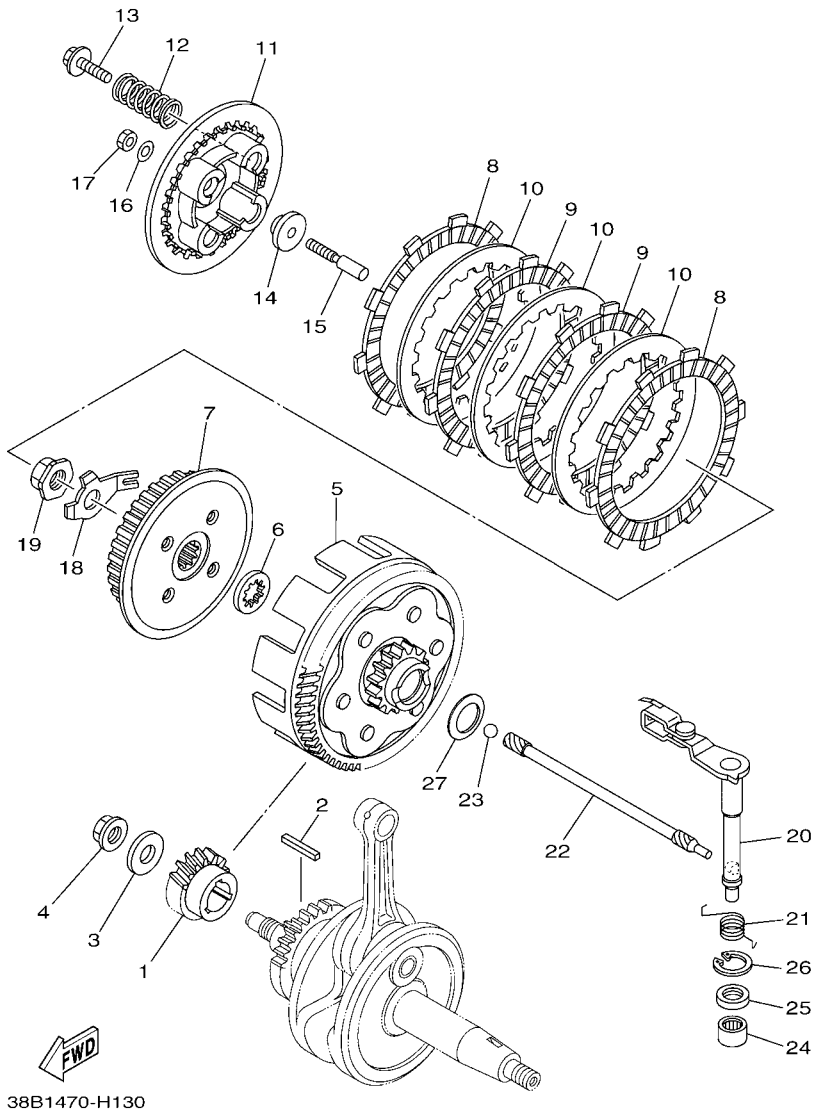

FIG. 13 EMBRAGUE CLUTCH

REF. Nº	CODIGO Nº PART NO.	DESCRIPCION DESCRIPTION	COL	CRI	ARG	AGO		OBSERVACIONES REMARKS
1	38B–E6111–00	ENGRANAJE TRACC.PRIMARIA GEAR, PRIMARY DRIVE	1	1	1	1		
2	38B–E6193–00	CHAVETA DE AGUJA KEY, FEATHER	1	1	1	1		
3	90201–12019	ARANDELA PLANA WASHER, PLATE	1	1	1	1		
4	90179–12802	TUERCA NUT	1	1	1	1		
5	1CK–E6150–00	CAMPANA DE EMBRAGUE PRIMARY DRIVEN GEAR COMP.	1	1	1	1		
6	21C–E6154–00	ARANDELA, DE EMPUJE 1 PLATE, THRUST 1	1	1	1	1		
7	21C–E6371–00	CUBO, DE EMBRAGUE BOSS, CLUTCH	1	1	1	1		
8	54B–E6321–00	PLACA DE FRICCION PLATE, FRICTION	2	2	2	2		
9	21C–E6331–00	DISCO, DE FRICCION 2 PLATE, FRICTION 2	2	2	2	2		
10	21C–E6324–00	PLACA DE EMBRAGUE PLATE, CLUTCH 1	3	3	3	3		
11	54B–E6351–00	PLATO DE PRESION PLATE, PRESSURE 1	1	1	1	1		
12	21C–E6333–00	RESORTE DE EMBRAGUE 1 SPRING, CLUTCH 1	4	4	4	4		
13	21C–E6337–00	TORNILLO DE RESORTE SCREW, SPRING	4	4	4	4		
14	21C–E6358–00	PLACA DE EMPUJE PLATE, PUSH	1	1	1	1		
15	21C–E6356–01	VARILLA DE EMPUJE 1 ROD, PUSH 1	1	1	1	1		
16	54B–E6144–00	ARANDELA WASHER	1	1	1	1		
17	3C1–E6344–00	TUERCA DE AJUSTE NUT, ADJUSTING	1	1	1	1		
18	21C–E6135–10	ARANDELA DE CIERRE WASHER, LOCK	1	1	1	1		
19	90179–14001	TUERCA NUT	1	1	1	1		
20	38B–E6380–01	LEVA DE EMPUJE COMPLETA PUSH LEVER ASSY	1	1	1	1		
21	1CK–E6345–00	RESORTE DE RETORNO SPRING, RETURN	1	1	1	1		
22	38B–E6357–01	VARILLA DE EMPUJE 2 ROD, PUSH 2	1	1	1	1		
23	93505–16844	BOLA BALL	1	1	1	1		
24	93315–112Y9	COJINETE DE RODILLOS BEARING	1	1	1	1		
25	93102–12877	SELLO ACEITE OIL SEAL	1	1	1	1		
26	99009–20500	PRESILLA REDONDA CIRCLIP	1	1	1	1		
27	90208–20003	ARANDELA DE RESORTE CONICO WASHER, CONICAL SPRING	1	1	1	1		

FIG. 14 TRANSMISION TRANSMISSION

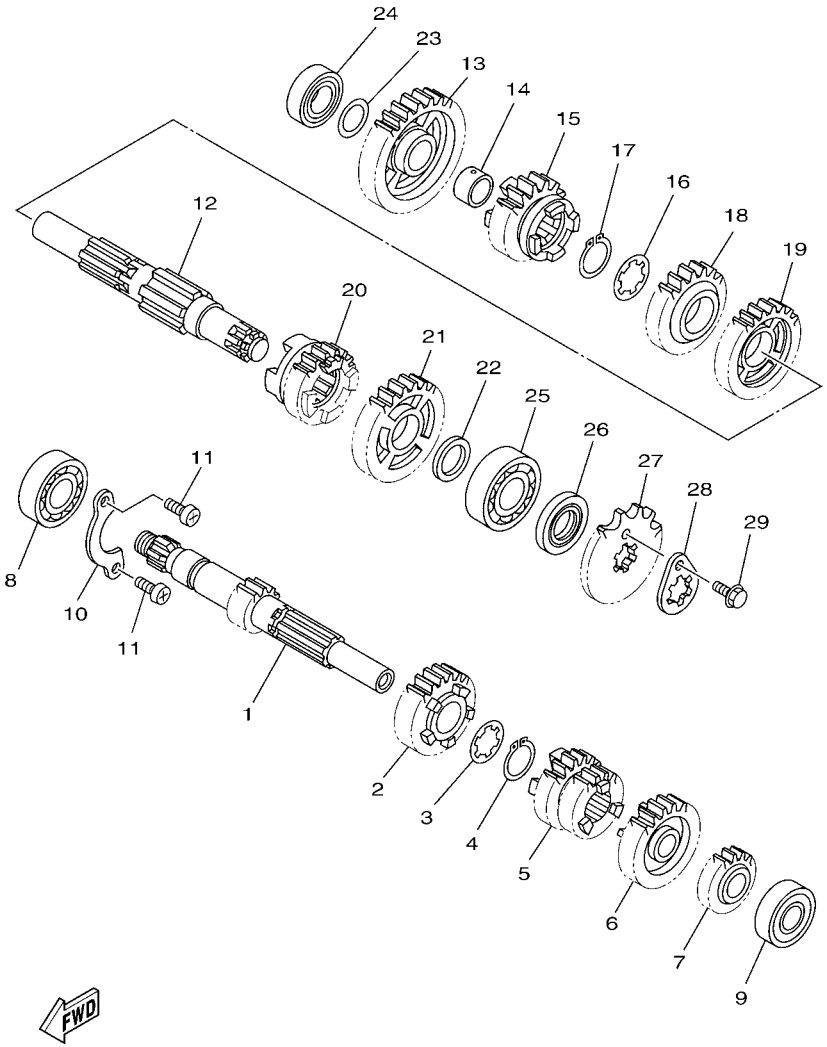

REF. Nº	CODIGO Nº PART NO.	DESCRIPCION DESCRIPTION	COL	CRI	ARG	AGO		OBSERVACIONES REMARKS
1	38B–E7411–01	EJE PRIMARIO (12T) AXLE, MAIN (12T)	1	1	1	1		
2	38B–E7151–00	ENGRANAJE PINON DE 5TA (21T) GEAR, 5TH PINION (21T)	1	1	1	1		
3	90209–17285	ARANDELA DE SEPARACION WASHER	1	1	1	1		
4	93410–20809	SEGURO CIRCLIP	1	1	1	1		
5	38B–E7131–00	ENGRANAJE PINON DE 3RA(22/21T) GEAR, 3RD PINION (22T/21T)	1	1	1	1		
6	38B–E7161–00	ENGRANAJE PINON 6TA (25T) GEAR, 6TH PINION (25T)	1	1	1	1		
7	38B–E7121–00	ENGRANAJE DE PINON DE 2DA(16T) GEAR, 2ND PINION (16T)	1	1	1	1		
8	93306–004XX	COJINETE BEARING	1	1	1	1		
9	93306–202YE	COJINETE BEARING	1	1	1	1		
10	38B–E7471–00	PLACA, DE CUBIERTA PLATE, COVER	1	1	1	1		
11	98517–06012	TORNILLO DE CABEZA CON PLANA SCREW, PAN HEAD	2	2	2	2		
12	1CK–E7402–00	EJE DE TRACCION COMPLETO DRIVE AXLE ASSY	1	1	1	1		
13	38B–E7211–00	ENGRANAJE RUEDA DE 1 RA (34T) GEAR, 1ST WHEEL (34T)	1	1	1	1		
14	38B–E7258–00	COLLAR 1 COLLAR 1	1	1	1	1		
15	38B–E7251–00	ENGRANAJE RUEDA DE 5TA (22T) GEAR, 5TH WHEEL (22T)	1	1	1	1		
16	90209–18208	ARANDELA DE SEPARACION WASHER	1	1	1	1		
17	93410–22039	SEGURO CIRCLIP	1	1	1	1		
18	38B–E7241–00	ENGRANAJE DE RUEDA 4TA (24T) GEAR, 4TH WHEEL (24T)	1	1	1	1		
19	38B–E7231–00	ENGRANAJE RUEDA DE 3RA (30T) GEAR, 3RD WHEEL (30T)	1	1	1	1		
20	38B–E7261–00	ENGRANAJE RUEDA DE 6TA (21T) GEAR, 6TH WHEEL (21T)	1	1	1	1		
21	38B–E7221–00	ENGRANAJE RUEDA DE 2DA (30T) GEAR, 2ND WHEEL (30T)	1	1	1	1		
22	90201–20814	ARANDELA PLANA WASHER, PLATE	1	1	1	1		
23	90201–173F4	ARANDELA PLANA WASHER, PLATE	1	1	1	1		
24	93306–003YN	COJINETE BEARING	1	1	1	1		
25	93306–204Y6	COJINETE BEARING	1	1	1	1		
26	93102–20806	SELLO ACEITE OIL SEAL	1	1	1	1		
27	93822–15808	CORONA (15T) SPROCKET, DRIVE (15T)	1	1	1	1		

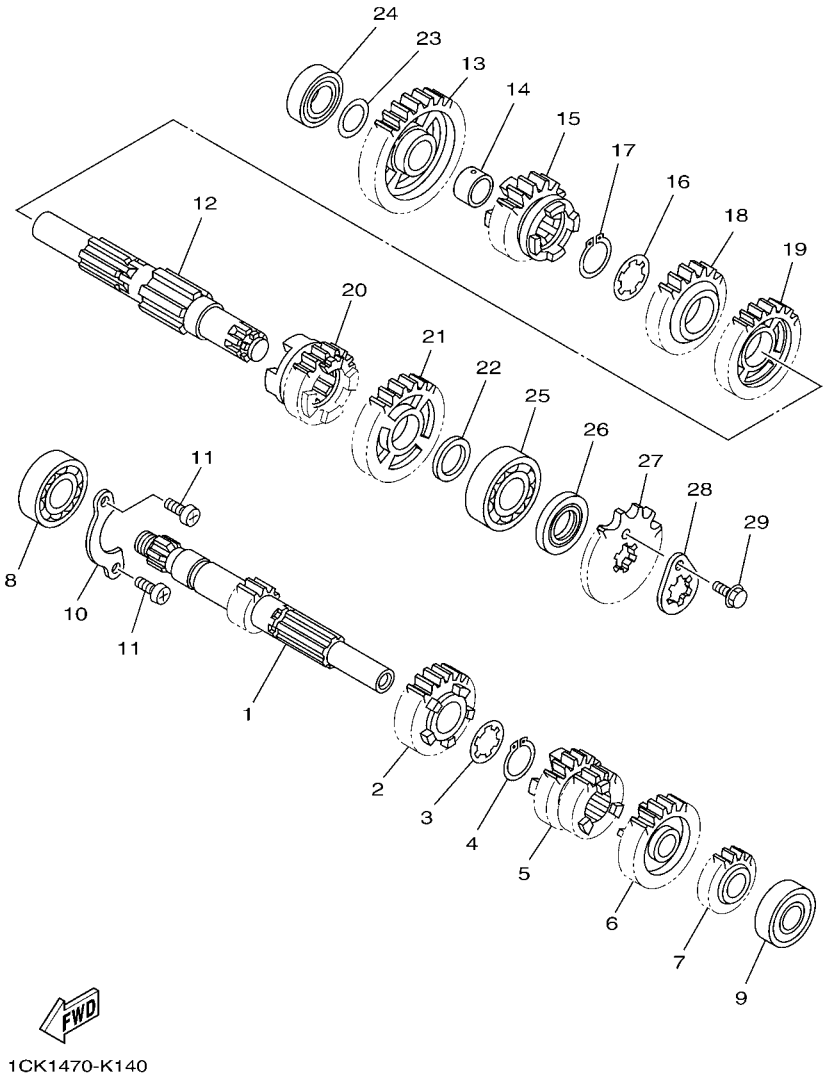

FIG. 14 TRANSMISION — TRANSMISSION

REF. Nº	CODIGO Nº PART NO.	DESCRIPCION DESCRIPTION	COL	CRI	ARG	AGO		OBSERVACIONES REMARKS
28	4LS–E7456–00	SOPORTE DE CORONA HOLDER, SPROCKET	1	1	1	1		
29	95027–06010	PERNO, DE BRIDA BOLT, FLANGE	1	1	1	1		

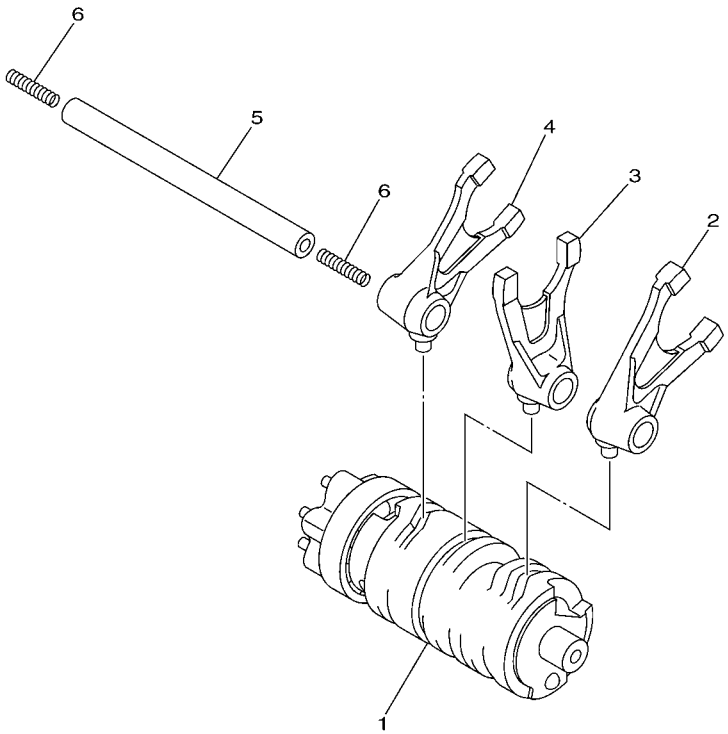

3C11460-F160

FIG. 15 LEVA DE CAMBIO & HORQUILLA SHIFT CAM & FORK

REF. Nº	CODIGO Nº PART NO.	DESCRIPCION DESCRIPTION	COL	CRI	ARG	AGO		OBSERVACIONES REMARKS
1	1CK–E8540–00	LEVA DEL CAMBIO COMPLETA SHIFT CAM ASSY	1	1	1	1		
2	38B–E8511–00	HORQUILLA DEL CAMBIO 1 FORK, SHIFT 1	1	1	1	1		
3	38B–E8512–00	HORQUILLA DEL CAMBIO 2 FORK, SHIFT 2	1	1	1	1		
4	38B–E8513–00	HORQUILLA DEL CAMBIO 3 FORK, SHIFT 3	1	1	1	1		
5	38B–E8531–00	BARRA GUIA HORQ. CAMBIO 1 BAR, SHIFT FORK GUIDE 1	1	1	1	1		
6	90501–06800	RESORTE DE COMPRESION SPRING, COMPRESSION	2	2	2	2		

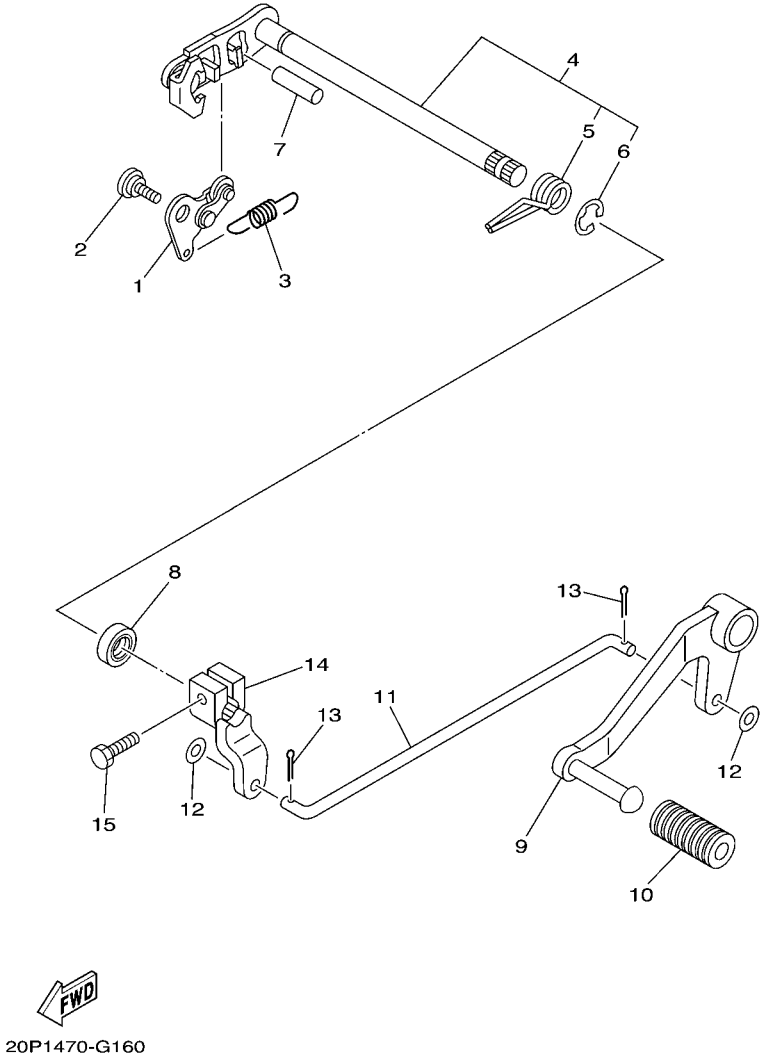

FIG. 16 EJE DE CAMBIO & PEDAL SHIFT SHAFT

REF. Nº	CODIGO Nº PART NO.	DESCRIPCION DESCRIPTION	COL	CRI	ARG	AGO		OBSERVACIONES REMARKS
1	21C–E8140–00	PALANCA DE TOPE COMPLETA STOPPER LEVER ASSY	1	1	1	1		
2	90109–06259	PERNO BOLT	1	1	1	1		
3	38B–E8337–00	RESORTE SPRING	1	1	1	1		
4	38B–E8101–00	EJE SELECTOR COMPLETO SHIFT SHAFT ASSY	1	1	1	1		
5	90508–32837	.RESORTE DE TORSION .SPRING, TORSION	1	1	1	1		
6	99001–10600	.PRESILLA REDONDA .CIRCLIP	1	1	1	1		
7	93608–30839	PASADOR DE CLAVIJA PIN, DOWEL	1	1	1	1		
8	93102–12809	SELLO ACEITE OIL SEAL	1	1	1	1		
9	20P–E8111–01	PEDAL DEL CAMBIO PEDAL, SHIFT	1	1	1	1		
10	20P–E8113–00	FUNDA DEL PEDAL DEL CAMBIO COVER, SHIFT PEDAL	1	1	1	1		
11	20P–E8115–00	VARILLA DEL CAMBIO ROD, SHIFT	1	1	1	1		
12	92907–06200	ARANDELA WASHER	2	2	2	2		
13	91401–20012	CHAVETA PIN, COTTER	2	2	2	2		
14	20P–E8112–01	BRAZO DEL CAMBIO ARM, SHIFT	1	1	1	1		
15	97024–06020	PERNO BOLT	1	1	1	1		

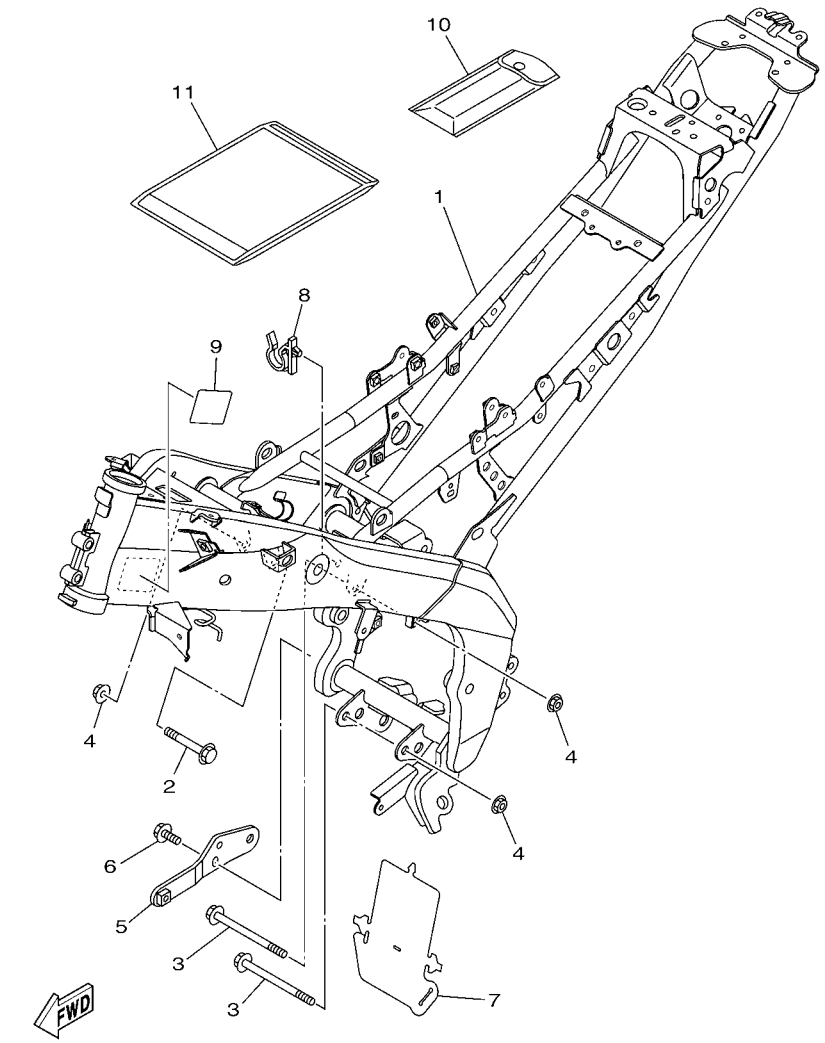

FIG. 17 CUADRO — FRAME

REF. Nº	CODIGO Nº PART NO.	DESCRIPCION DESCRIPTION	COL	CRI	ARG	AGO		OBSERVACIONES REMARKS
1	1CK–F1110–00	ARMAZON COMPLETO FRAME COMP.	1	1	1	1		
2	90105–10323	TORNILLO BOLT, FLANGE	1	1	1	1		
3	90105–10857	TORNILLO BOLT, FLANGE	2	2	2	2		
4	90179–10811	TUERCA NUT	3	3	3	3		
5	20P–F8284–00	MENSULA INFERIOR BRACKET, UNDER	1	1	1	1		
6	95817–08016	TORNILLO BOLT, FLANGE	2	2	2	2		
7	20P–F2327–00	GUARDAFANGO 1 MUD GUARD 1	1	1	1	1		
8	20P–F1338–00	GRAMPA CLAMP	1	1	1	1		
9	1CK–F117G–00	PROTECTOR PROTECTOR	1	1	1	1		
10	1CK–F8100–00	JUEGO DE HERRAMIENTAS TOOL KIT	1	1	1	1		
11	1CK–F8186–00	SACO PLASTICO POUCH	1	1	1	1		

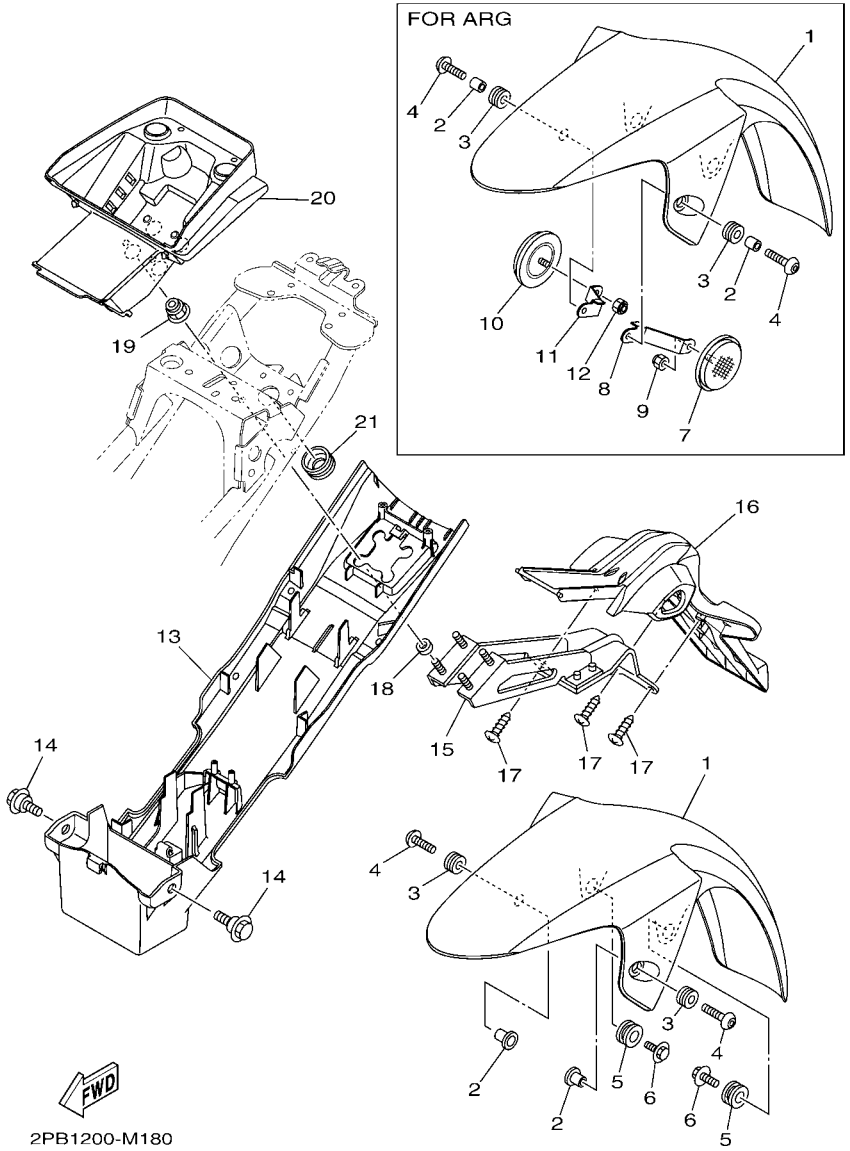

FIG. 18 GUARDABARRO FENDER

REF. Nº	CODIGO Nº PART NO.	DESCRIPCION DESCRIPTION	COL	CRI	ARG	AGO		OBSERVACIONES REMARKS
1	1CK–F1511–00–P0	GUARDABARRO DELANTERO FENDER, FRONT	1	1	1	1		UR PARA DPBMY UR FOR DPBMY
	1CK–F1511–00–P1	GUARDABARRO DELANTERO FENDER, FRONT	1	1	1	1		UR PARA SMX UR FOR SMX
	1CK–F1511–00–P2	GUARDABARRO DELANTERO FENDER, FRONT	1	1	1	1		UR PARA VRC1 UR FOR VRC1
2	90387–068C8	ESPACIADOR COLLAR	2	2		2		
	90387–067V1	ESPACIADOR COLLAR			2			
3	90480–12805	TAPON GROMMET	2	2	2	2		
4	90111–06117	TORNILLO BOLT,HEX. SOCKET BUTTON	2	2	2	2		
5	90480–18859	TAPON GROMMET	2	2	2	2		
6	90119–06233	TORNILLO CON ARANDELA BOLT, WITH WASHER	2	2	2	2		
7	4AG–85111–00	REFLECTOR, 1 REFLECTOR, 1			1			
8	54C–F113J–00	SOPORTE, REFLECTOR 1 BRACKET, REFLECTOR 1			1			
9	95607–06100	TUERCA AUTOBLOCANTE NUT, U			1			
10	4AG–85111–00	REFLECTOR, 1 REFLECTOR, 1			1			
11	54C–F113K–00	SOPORTE, REFLECTOR 2 BRACKET, REFLECTOR 2			1			
12	95607–06100	TUERCA AUTOBLOCANTE NUT, U			1			
13	1CK–F1611–00	GUARDABARRO TRASERO FENDER, REAR	1	1	1	1		
14	90109–06220	PERNO BOLT	2	2	2	2		
15	1CK–F1640–00	SOPORTE TRASERO COMPLETO REAR STAY COMP.	1	1	1	1		
16	1CK–F1629–00	GUARDABARRO INFERIOR GUARD, MUD	1	1	1	1		
17	97702–50016	TORNILLO ROSCA HEMBRA SCREW, TAPPING	3	3	3	3		
18	90387–068G0	ESPACIADOR COLLAR	4	4	4	4		
19	95602–06200	TUERCA DE AUTO-CIERRE NUT, SELF-LOCKING	4	4	4	4		
20	1CK–F160E–00	CAJA BOX	1	1	1	1		
21	90480–25482	TAPON GROMMET	1	1	1	1		

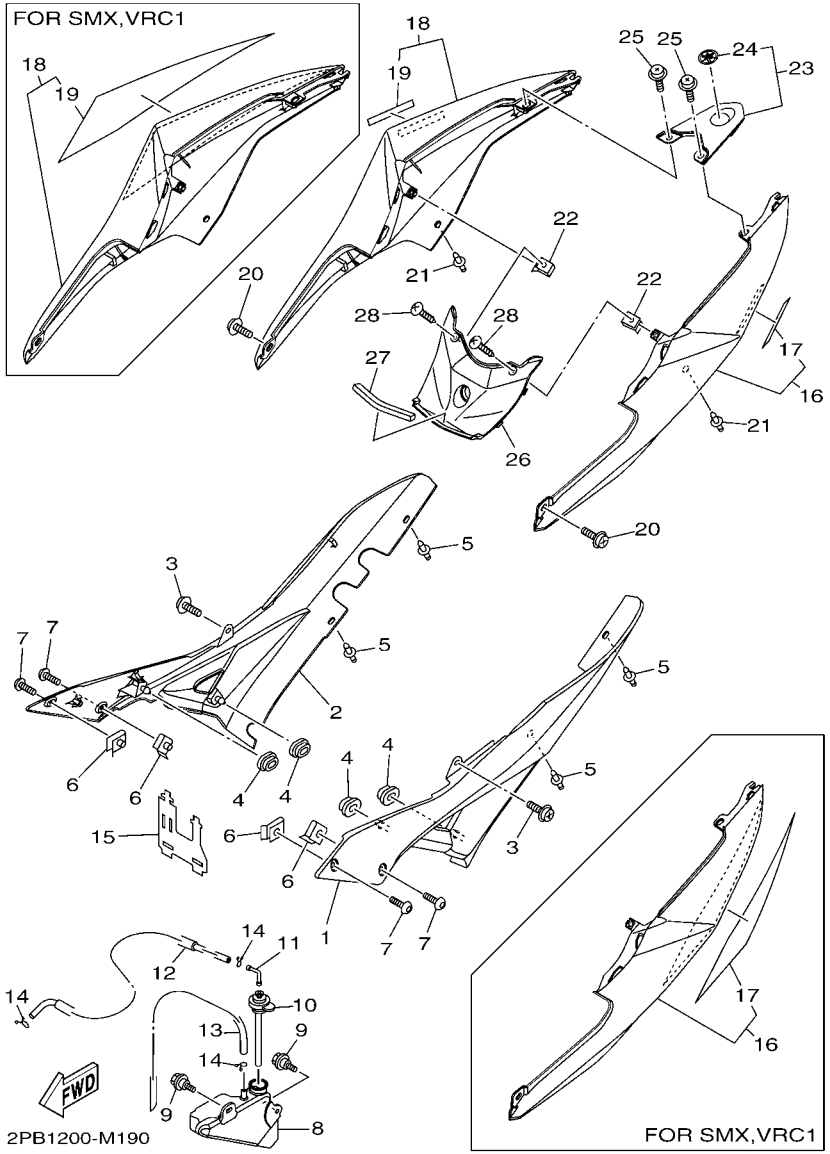

FIG. 19 CUBIERTA LATERAL SIDE COVER

REF. Nº	CODIGO Nº PART NO.	DESCRIPCION DESCRIPTION	COL	CRI	ARG	AGO		OBSERVACIONES REMARKS
1	1CK–F1711–00	CUBIERTA LATERAL 1 COVER, SIDE 1	1	1	1	1		
2	1CK–F1721–00	CUBIERTA LATERAL 2 COVER, SIDE 2	1	1	1	1		
3	90159–06181	TORNILLO CON VALONA SCREW, WITH WASHER	2	2	2	2		
4	90480–01558	TAPON GROMMET	4	4	4	4		
5	90269–06008	REMACHE RIVET	4	4	4	4		
6	90183–05061	TUERCA DE RESORTE NUT, SPRING	4	4	4	4		
7	90111–05003	TORNILLO BOLT,HEX. SOCKET BUTTON	4	4	4	4		
8	20P–F1871–00	TANQUE DE RECUPERACION TANK, RECOVERY	1	1	1	1		
9	90109–06183	PERNO BOLT	2	2	2	2		
10	20P–F1875–00	TAPA CAP	1	1	1	1		
11	20P–F1828–00	CODO ELBOW	1	1	1	1		
12	90445–08831	TUBO HOSE	1	1	1	1		
13	90445–08832	TUBO HOSE	1	1	1	1		
14	90467–08003	PRESILLA CLIP	3	3	3	3		
15	20P–F1823–00	GRAMPA DE MANGUERA CLAMP, HOSE	1	1	1	1		
16	1CK–XF173–00–P0	TAPA LATERAL 3 COVER, SIDE 3	1	1	1	1		UR PARA DPBMY UR FOR DPBMY
	1CK–XF173–10–P1	TAPA LATERAL 3 COVER, SIDE 3	1	1	1	1		UR DBNM8 PARA SMX UR DBNM8 FOR SMX
	1CK–XF173–20–P2	TAPA LATERAL 3 COVER, SIDE 3	1	1	1	1		UR BWC1 PARA VRC1 UR BWC1 FOR VRC1
17	1CK–F174G–00	.GRAFICO 3 .GRAPHIC 3	1	1	1	1		UR PARA DPBMY UR FOR DPBMY
	1CK–F173E–00	.GRAFICO, 1 .GRAPHIC 1	1	1	1	1		UR PARA SMX UR FOR SMX
	1CK–F173E–10	.GRAFICO, 1 .GRAPHIC 1	1	1	1	1		UR PARA VRC1 UR FOR VRC1
18	1CK–XF174–00–P0	CUBIERTA LATERAL 4 COVER, SIDE 4	1	1	1	1		UR PARA DPBMY UR FOR DPBMY
	1CK–XF174–10–P1	CUBIERTA LATERAL 4 COVER, SIDE 4	1	1	1	1		UR DBNM8 PARA SMX UR DBNM8 FOR SMX
	1CK–XF174–20–P2	CUBIERTA LATERAL 4 COVER, SIDE 4	1	1	1	1		UR BWC1 PARA VRC1 UR BWC1 FOR VRC1
19	1CK–F174G–00	.GRAFICO 3 .GRAPHIC 3	1	1	1	1		UR PARA DPBMY UR FOR DPBMY
	1CK–F173F–00	.GRAFICO 2 .GRAPHIC 2	1	1	1	1		UR PARA VRC1 UR FOR SMX
	1CK–F173F–10	.GRAFICO 2 .GRAPHIC 2	1	1	1	1		UR PARA VRC1 UR FOR VRC1

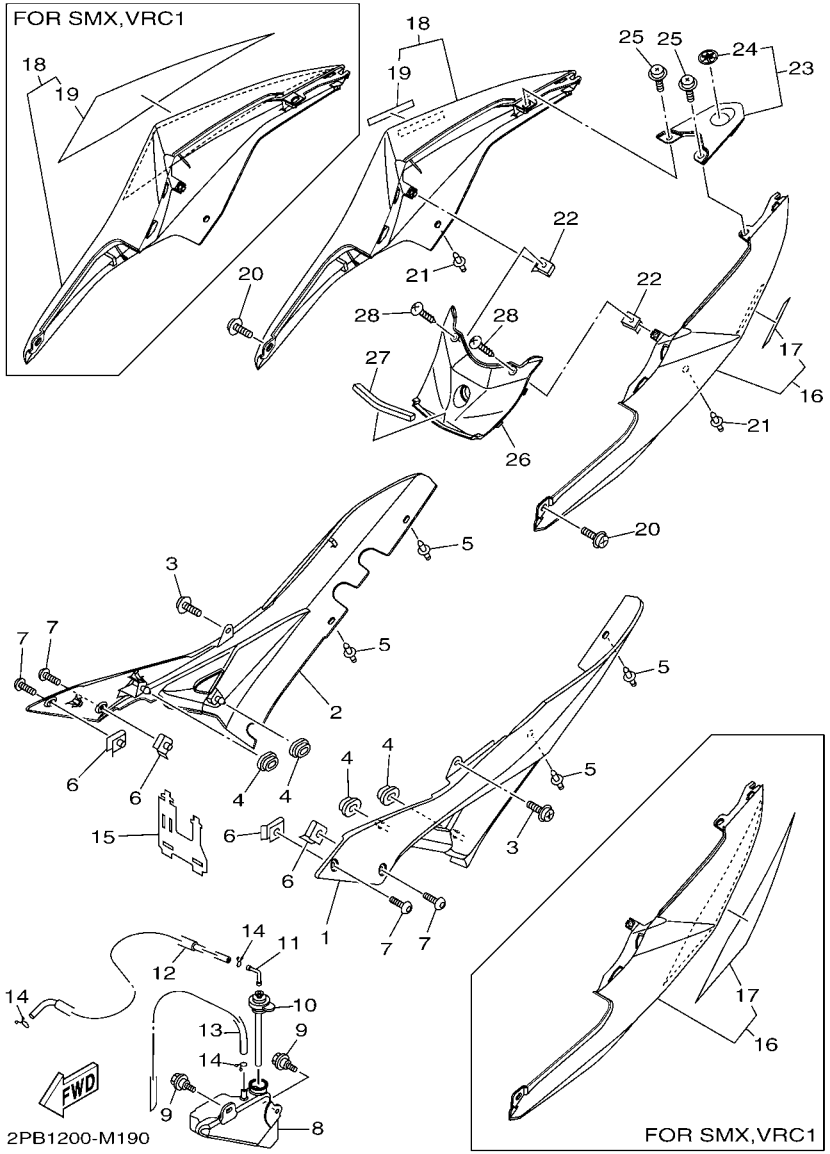

FIG. 19 CUBIERTA LATERAL — SIDE COVER

REF. Nº	CODIGO Nº PART NO.	DESCRIPCION DESCRIPTION	COL	CRI	ARG	AGO		OBSERVACIONES REMARKS
20	90159–06181	TORNILLO CON VALONA SCREW, WITH WASHER	2	2	2	2		
21	90269–06008	REMACHE RIVET	2	2	2	2		
22	90183–05818	TUERCA DE RESORTE NUT, SPRING	2	2	2	2		
23	1CK–XF17C–00–P0	CUBIERTA LATERAL 5 COVER, SIDE 5	1	1	1	1		UR PARA DPBMY UR FOR DPBMY
	1CK–XF17C–10–P1	CUBIERTA LATERAL 5 COVER, SIDE 5	1	1	1	1		UR DBNM8 PARA SMX UR DBNM8 FOR SMX
	1CK–XF17C–20–P2	CUBIERTA LATERAL 5 COVER, SIDE 5	1	1	1	1		UR BWC1 PARA VRC1 UR BWC1 FOR VRC1
24	20P–F836B–00	.MARCA .TUNING FORK MARK	1	1	1	1		
25	90159–06181	TORNILLO CON VALONA SCREW, WITH WASHER	2	2	2	2		
26	1CK–F171X–00–P0	CUBIERTA LATERAL 6 COVER, SIDE 6	1	1	1	1		UR PARA DPBMY UR FOR DPBMY
	1CK–F171X–00–P1	CUBIERTA LATERAL 6 COVER, SIDE 6	1	1	1	1		UR DBNM8 PARA SMX UR DBNM8 FOR SMX
	1CK–F171X–00–P2	CUBIERTA LATERAL 6 COVER, SIDE 6	1	1	1	1		UR BWC1 PARA VRC1 UR BWC1 FOR VRC1
27	90520–08801	EQUILIBRIO, CUBIERTA DAMPER, PLATE	1	1	1	1		
28	97707–50012	TORNILLO SCREW, TRUSS HEAD TAPPING	2	2	2	2		

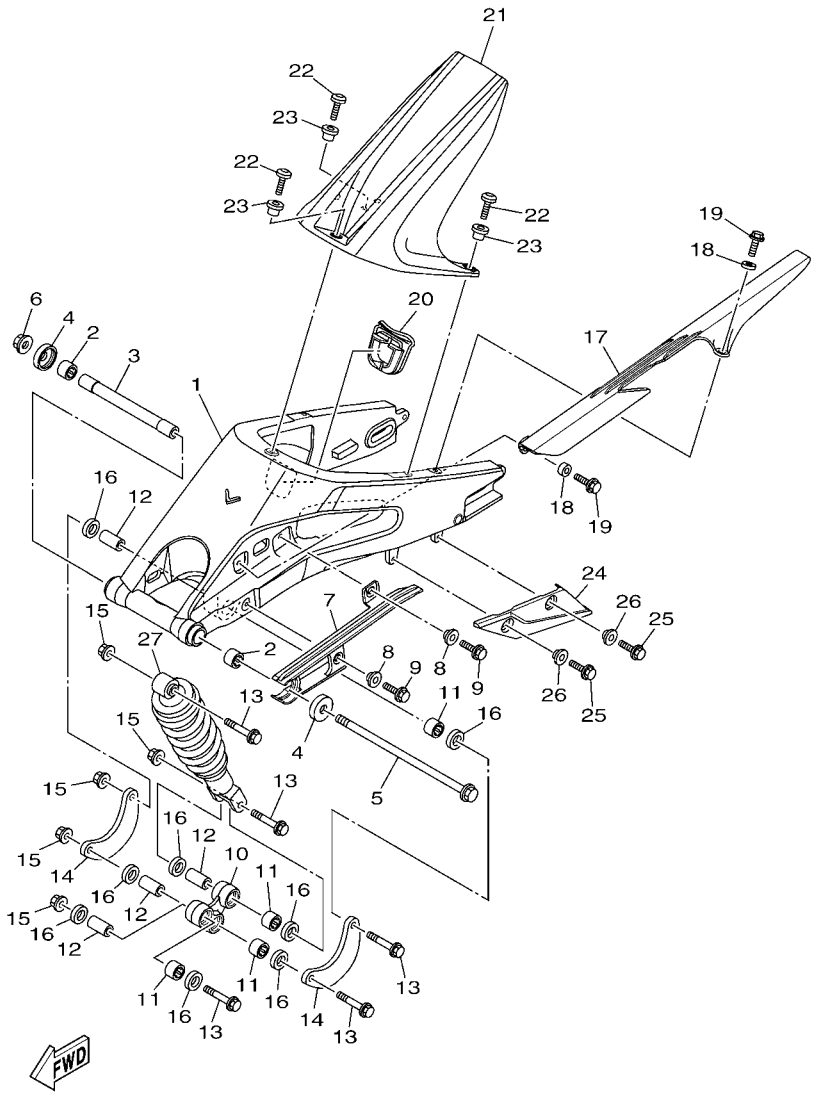

2PB1200-M200

FIG. 20 BRAZO TRASERO & SUSPENSION REAR ARM & SUSPENSION

REF. Nº	CODIGO Nº PART NO.	DESCRIPCION DESCRIPTION	COL	CRI	ARG	AGO		OBSERVACIONES REMARKS
1	1CK–F2110–00	BRAZO TRASERO COMPLETO REAR ARM COMP.	1	1	1	1		
2	93317–318Y5	COJINETE BEARING	2	2	2	2		
3	20P–F2184–00	BUJE BUSH	1	1	1	1		
4	1CK–F2128–00	TAPA DE EMPIJE 1 COVER, THRUST 1	2	2	2	2		
5	20P–F2141–00	EJE DEL BARCULANTE SHAFT, PIVOT	1	1	1	1		
6	95707–12500	TUERCA DE BRIDA NUT, FLANGE	1	1	1	1		
7	1CK–F2151–00	SELLO DE GUARDA SEAL, GUARD	1	1	1	1		
8	90387–07819	ESPACIADOR COLLAR	2	2	2	2		
9	95827–06014	TORNILLO BOLT, FLANGE	2	2	2	2		
10	1CK–F217A–00	BRAZO REEURIO ARM, RELAY	1	1	1	1		
11	93315–31758	COJINETE DE RODILLOS BEARING	4	4	4	4		
12	90387–10814	ESPACIADOR COLLAR	4	4	4	4		
13	90105–10311	TORNILLO BOLT, FLANGE	5	5	5	5		
14	1CK–F217F–00	BIELA COMPLETA 1 ROD, CONNECTING 1	2	2	2	2		
15	90179–10813	TUERCA NUT	5	5	5	5		
16	93106–17802	SELLO ACEITE OIL SEAL	8	8	8	8		
17	1CK–F2311–00	CABRECADENA CASE, CHAIN	1	1	1	1		
18	90387–068G0	ESPACIADOR COLLAR	2	2	2	2		
19	95827–06014	TORNILLO BOLT, FLANGE	2	2	2	2		
20	1CK–F219X–00	CUBIERTA COVER	1	1	1	1		
21	2PB–F1650–00	GUARDABARRO TRANSERO COMP. REAR FENDER COMP.	1	1	1	1		
22	90111–06139	TORNILLO BOLT,HEX. SOCKET BUTTON	3	3	3	3		
23	90387–068H0	ESPACIADOR COLLAR	3	3	3	3		
24	1CK–F2147–00	PROTECTOR DE CADENA PROTECTOR, CHAIN	1	1	1	1		
25	95827–06014	TORNILLO BOLT, FLANGE	2	2	2	2		
26	90387–07819	ESPACIADOR COLLAR	2	2	2	2		
27	1CK–F2210–00	AMORTIGUADOR TRASERO COMPLETO SHOCK ABSORBER ASSY, REAR	1	1	1	1		

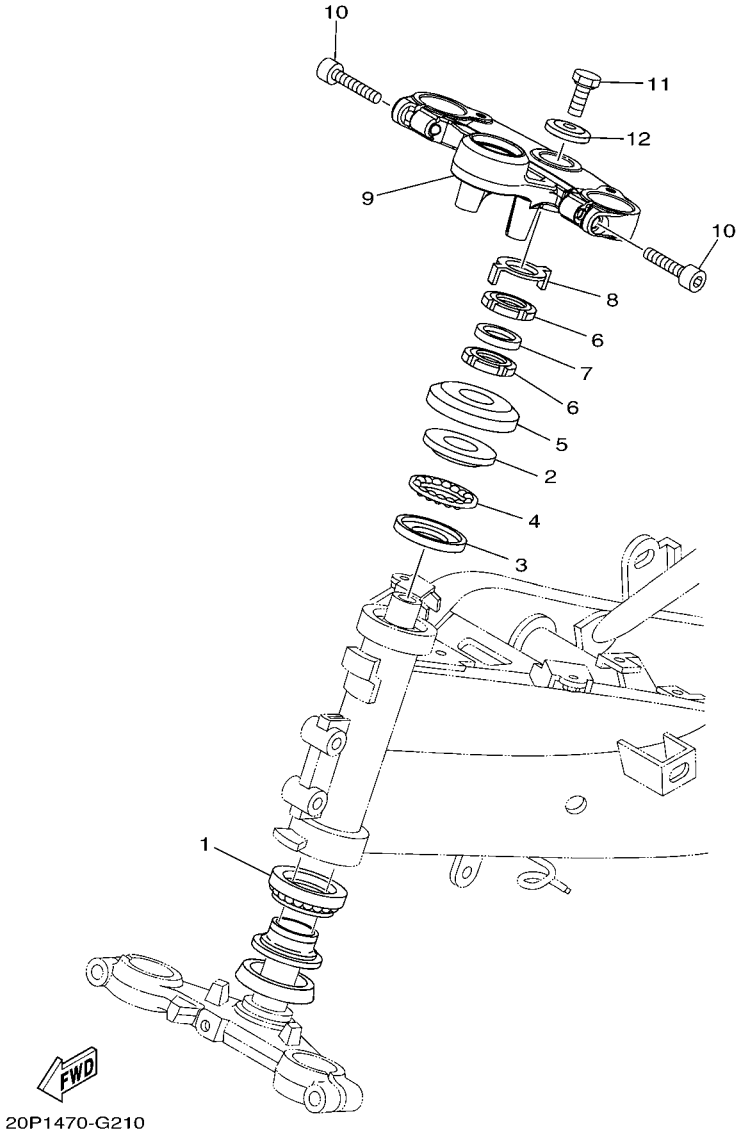

FIG. 21 DIRECCION STEERING

REF. Nº	CODIGO Nº PART NO.	DESCRIPCION DESCRIPTION	COL	CRI	ARG	AGO		OBSERVACIONES REMARKS
1	5BP–F3873–01	COJINETE SUP.DIRECCION BEARING, STEERING UPPER	1	1	1	1		
2	183–23411–00	PISTA DE BOLAS 1 RACE, BALL 1	1	1	1	1		
3	183–23412–00	PISTA DE BOLAS 2 RACE, BALL 2	1	1	1	1		
4	5TL–2341E–00	RETEN DE COJINETE (16) RETAINER, BALL BEARING (16)	1	1	1	1		
5	20P–F3416–00	CUBIERTA DE BASE DE BOLA 2 COVER, BALL RACE 2	1	1	1	1		
6	90179–25615	TUERCA NUT	2	2	2	2		
7	90202–26142	ARANDELA DE PLANA WASHER, PLATE	1	1	1	1		
8	20P–F3418–00	ARANDELA ESPECIAL WASHER, SPECIAL	1	1	1	1		
9	20P–F3435–00	PLATINA SUPERIOR CROWN, HANDLE	1	1	1	1		
10	91317–08030	PERNO BOLT	2	2	2	2		
11	90105–10006	TORNILLO BOLT, FLANGE	1	1	1	1		
12	90209–10020	ARANDELA DE SEPARACION WASHER	1	1	1	1		

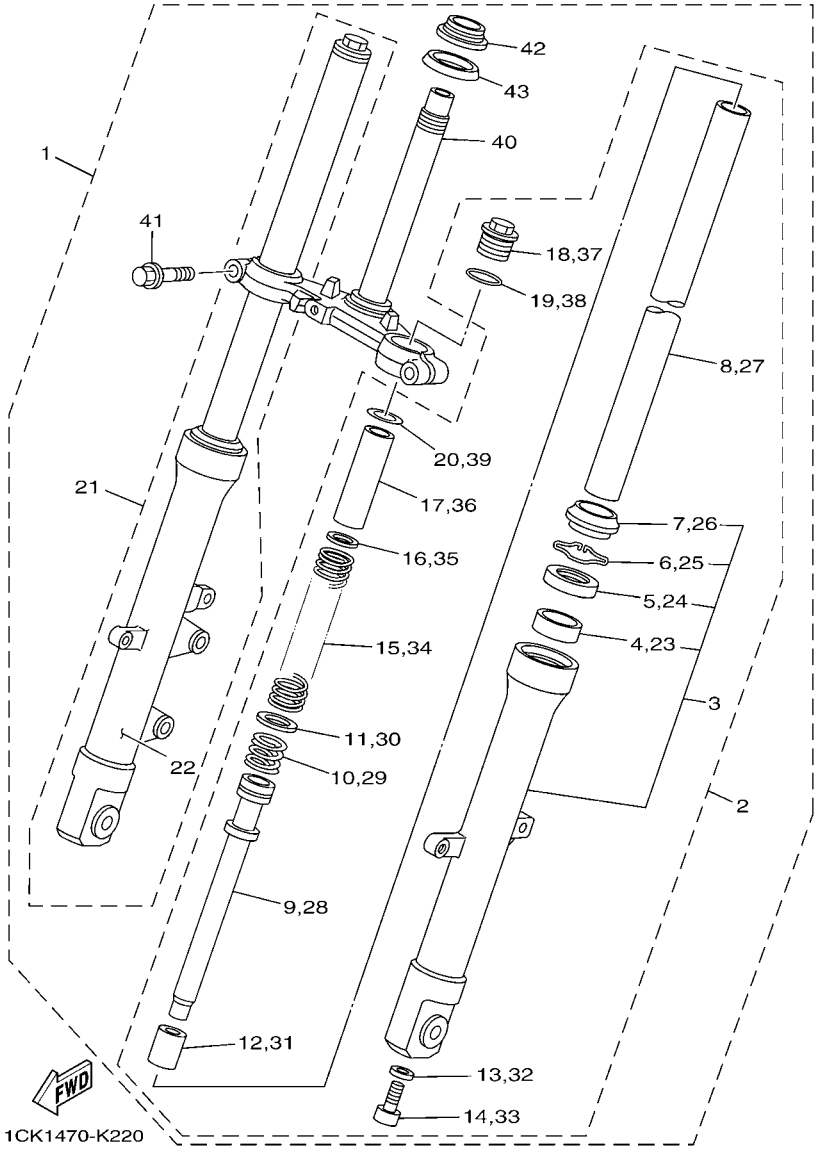

FIG. 22 HORQUILLA DELANTERA FRONT FORK

REF. Nº	CODIGO Nº PART NO.	DESCRIPCION DESCRIPTION	COL	CRI	ARG	AGO		OBSERVACIONES REMARKS
1	1CK–F3100–00	HORQUILLA DELANTERA COMPLETA FRONT FORK ASSY	1	1	1	1		
2	1CK–F3102–00	.HORQUILLA DELANTERA COMPL.(MI) .FRONT FORK ASSY (L.H)	1	1	1	1		
3	1CK–F3126–00	..TUBO EXTERIOR (IZQUIERDO) ..TUBE, OUTER (LEFT)	1	1	1	1		
4	20P–F3125–00	...METAL CORREDIZO 1 ...METAL, SLIDE 1	1	1	1	1		
5	20P–F3145–00	...RETEN DE ACEITE ...OIL SEAL	1	1	1	1		
6	20P–F3156–10	...ANILLO DE ENGANCHE ...RING, SNAP	1	1	1	1		
7	20P–F3144–00	..GUARDAPOLVO ..SEAL, DUST	1	1	1	1		
8	20P–F3110–00	..TUBO INTERIOR COMPLETO 1 ..INNER TUBE COMP.1	1	1	1	1		
9	20P–F3170–00	..CILINDRO COMPL DE HORQ DELANT ..CYLINDER COMP., FRONT FORK	1	1	1	1		
10	20P–F3151–00	..RESORTE DE REBOTE ..SPRING, REBOUND	1	1	1	1		
11	20P–F3157–00	..ANILLO DEL PISTON ..RING, PISTON	1	1	1	1		
12	20P–F3173–00	..VASTAGO AHUSADO ..SPINDLE, TAPER	1	1	1	1		
13	21C–F3158–00	..EMPAQUE ..GASKET	1	1	1	1		
14	21C–F3181–10	.TORNILLO CABEZAHEXAGONAL .BOLT, HEXAGON SOCKET HEAD	1	1	1	1		
15	20P–F3141–00	..RESORTE HORQUILLA DELANT. ..SPRING, FRONT FORK	1	1	1	1		
16	20P–F3149–00	..ARANDELA DE RESORTE SUPERIOR ..WASHER, SPRING UPPER	1	1	1	1		
17	20P–F3118–00	..SEPARADOR ..SPACER	1	1	1	1		
18	20P–F3111–00	..PERNO DE TAPA ..BOLT, CAP	1	1	1	1		
19	20P–F3114–00	..EMPAQUE ..GASKET	1	1	1	1		
20	1CK–F3738–00	..ARANDELA 2 ..WASHER 2	1	1	1	1		
21	1CK–F3103–00	.HORQUILLA DELANTERA COMPL.(MD) .FRONT FORK ASSY (R.H)	1	1	1	1		
22	1CK–F3136–00	..TUBO EXTERIOR (DERECHO) ..TUBE, OUTER (RIGHT)	1	1	1	1		
23	20P–F3125–00	...METAL CORREDIZO 1 ...METAL, SLIDE 1	1	1	1	1		
24	20P–F3145–00	...RETEN DE ACEITE ...OIL SEAL	1	1	1	1		
25	20P–F3156–10	...ANILLO DE ENGANCHE ...RING, SNAP	1	1	1	1		
26	20P–F3144–00	..GUARDAPOLVO ..SEAL, DUST	1	1	1	1		
27	20P–F3110–00	..TUBO INTERIOR COMPLETO 1 ..INNER TUBE COMP.1	1	1	1	1		

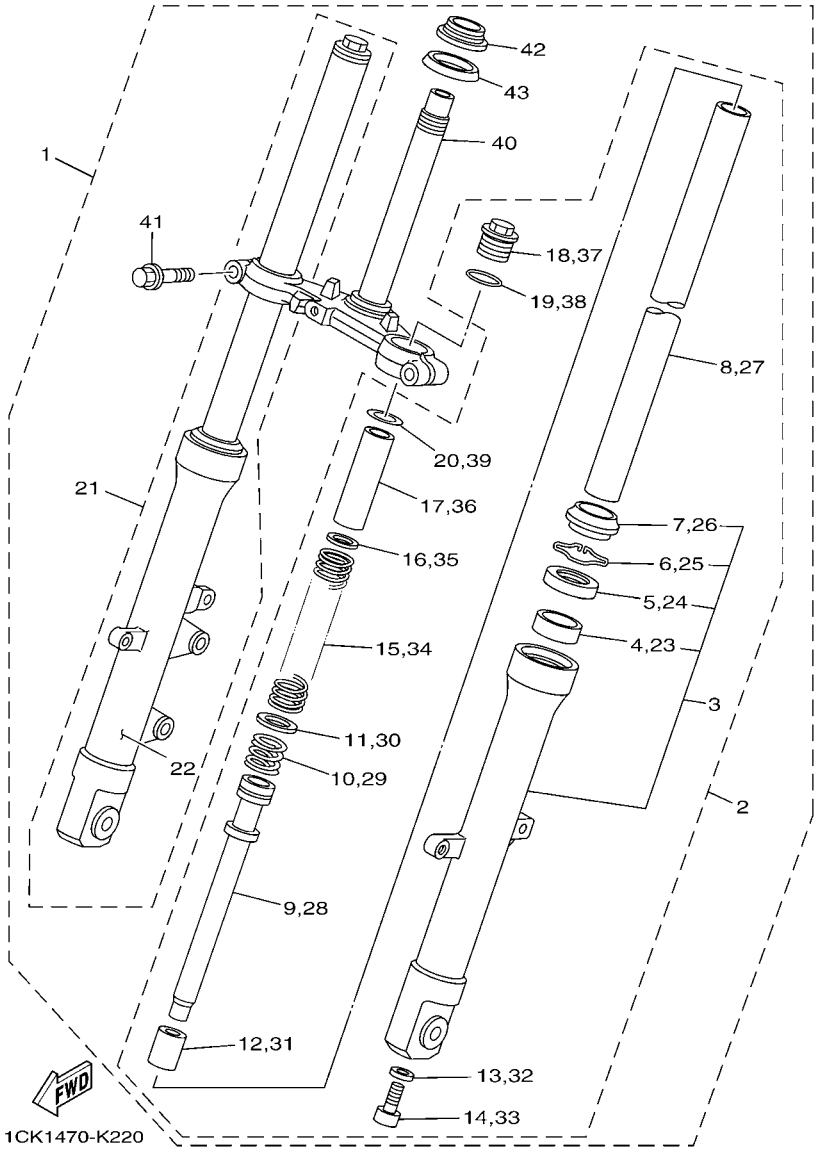

FIG. 22 HORQUILLA DELANTERA FRONT FORK

REF. Nº	CODIGO Nº PART NO.	DESCRIPCION DESCRIPTION	COL	CRI	ARG	AGO		OBSERVACIONES REMARKS
28	20P–F3170–00	..CILINDRO COMPL DE HORQ DELANT ..CYLINDER COMP., FRONT FORK	1	1	1	1		
29	20P–F3151–00	..RESORTE DE REBOTE ..SPRING, REBOUND	1	1	1	1		
30	20P–F3157–00	..ANILLO DEL PISTON ..RING, PISTON	1	1	1	1		
31	20P–F3173–00	..VASTAGO AHUSADO ..SPINDLE, TAPER	1	1	1	1		
32	21C–F3158–00	..EMPAQUE ..GASKET	1	1	1	1		
33	21C–F3181–10	.TORNILLO CABEZAHEXAGONAL .BOLT, HEXAGON SOCKET HEAD	1	1	1	1		
34	20P–F3141–00	..RESORTE HORQUILLA DELANT. ..SPRING, FRONT FORK	1	1	1	1		
35	20P–F3149–00	..ARANDELA DE RESORTE SUPERIOR ..WASHER, SPRING UPPER	1	1	1	1		
36	20P–F3118–00	..SEPARADOR ..SPACER	1	1	1	1		
37	20P–F3111–00	..PERNO DE TAPA ..BOLT, CAP	1	1	1	1		
38	20P–F3114–00	..EMPAQUE ..GASKET	1	1	1	1		
39	1CK–F3738–00	..ARANDELA 2 ..WASHER 2	1	1	1	1		
40	20P–F3340–00	.PLATINA INFERIOR COMPLETA .UNDER BRACKET COMP.	1	1	1	1		
41	20P–F3346–00	.PERNO 1 .BOLT 1	2	2	2	2		
42	5BP–F3875–00	.COJINETE .BEARING, STEERING LOWER	1	1	1	1		
43	5YY–F3462–00	.SELLO PARA POLVO .SEAL, DUST	1	1	1	1		

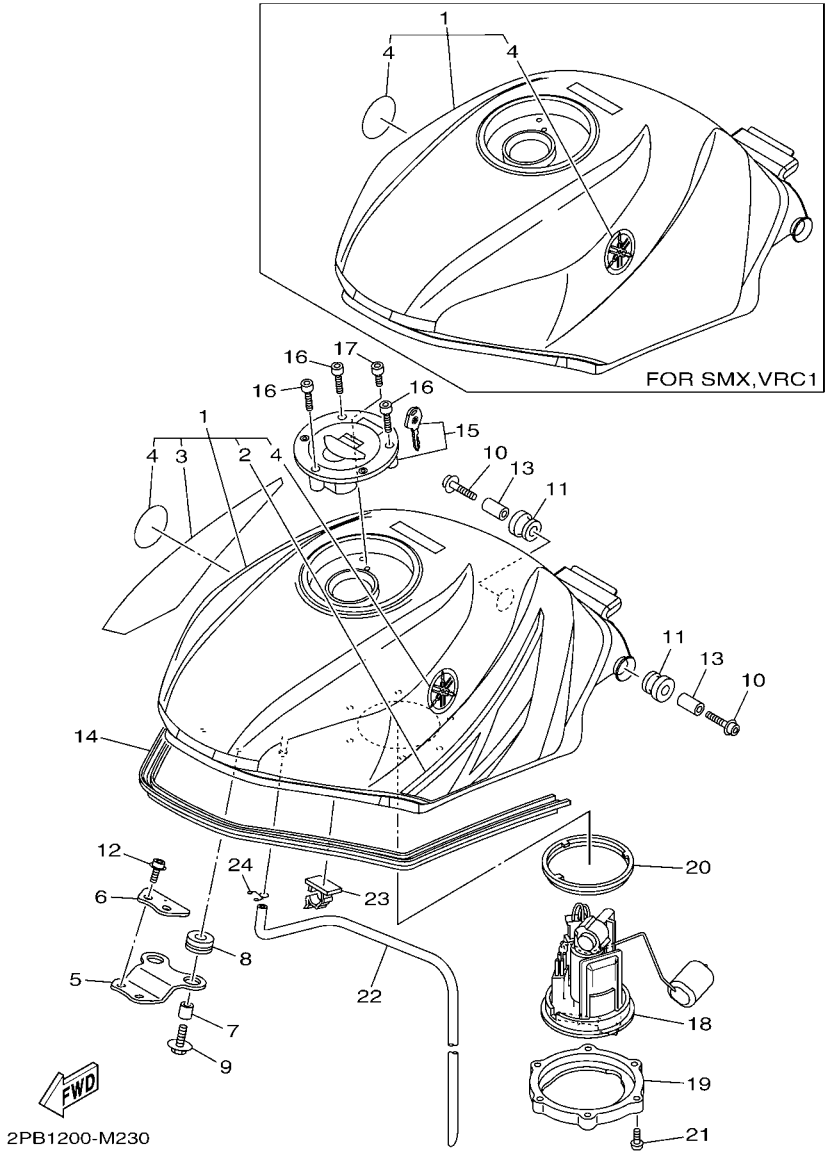

FIG. 23 DEPOSITO DE COMBUSTIBLE FUEL TANK

REF. Nº	CODIGO Nº PART NO.	DESCRIPCION DESCRIPTION	COL	CRI	ARG	AGO		OBSERVACIONES REMARKS
1	1CK–XF41A–00–P0	DEPOSITO DE COMBUSTIBLE COMP. FUEL TANK COMP.	1	1	1	1		UR PARA DPBMY UR FOR DPBMY
	1CK–XF41A–10–P1	DEPOSITO DE COMBUSTIBLE COMP. FUEL TANK COMP.	1	1	1	1		UR PARA SMX UR FOR SMX
	1CK–XF41A–20–P4	DEPOSITO DE COMBUSTIBLE COMP. FUEL TANK COMP.	1	1	1	1		UR PARA VRC1 UR FOR VRC1
2	1CK–F4245–00	.CALCOMANIA DEPOSITO COMBUST.2 .GRAPHIC, FUEL TANK 2	1	1	1	1		PARA DPBMY FOR DPBMY
3	1CK–F4246–00	.CALCOMANIA 3 .GRAPHIC 3	1	1	1	1		PARA DPBMY FOR DPBMY
4	5YY–F413B–00	.EMBLEMA .EMBLEM	2	2	2	2		
5	20P–F4191–00	SOPORTE DEPOSITO DE COMBUST.1 BRACKET, FUEL TANK 1	1	1	1	1		
6	20P–F411F–00	PLACA, ADITAMENTO PLATE, FITTING	1	1	1	1		
7	90387–06892	ESPACIADOR COLLAR	2	2	2	2		
8	90480–15483	TAPON GROMMET	2	2	2	2		
9	90119–06234	TORNILLO CON ARANDELA BOLT, WITH WASHER	2	2	2	2		
10	90110–06287	TORNILLO ALLEN BOLT, HEXAGON SOCKET HEAD	2	2	2	2		
11	90480–18549	TAPON GROMMET	2	2	2	2		
12	90110–06215	TORNILLO ALLEN BOLT, HEXAGON SOCKET HEAD	2	2	2	2		
13	90387–06890	ESPACIADOR COLLAR	2	2	2	2		
14	20P–F4188–00	MOLDURA DEPOSITO COMBUST. MOLD, FUEL TANK	1	1	1	1		
15	54D–WF461–00	TAPA DE DEPOSITO COMPLETO CAP ASSY WITH LOCK	1	1	1	1		
16	90110–05806	TORNILLO ALLEN BOLT, HEXAGON SOCKET HEAD	3	3	3	3		
17	91317–05010	PERNO BOLT	1	1	1	1		
18	3C1–E3907–10	BOMBA DE COMBUSTIBLE COMPLETA FUEL PUMP COMP.	1	1	1	1		
19	38B–F4491–00	SOPORTE BOMBA COMBUSTIBLE BRACKET, FUEL PUMP	1	1	1	1		
20	20P–F4486–00	ANILLO O O-RING	1	1	1	1		
21	92012–05016	PERNO BOLT, BUTTON HEAD	6	6	6	6		
22	20P–F4312–00	TUBO 2 PIPE 2	1	1	1	1		
23	90464–25160	BRIDA CLAMP	1	1	1	1		
24	90467–09006	PRESILLA CLIP	1	1	1	1		

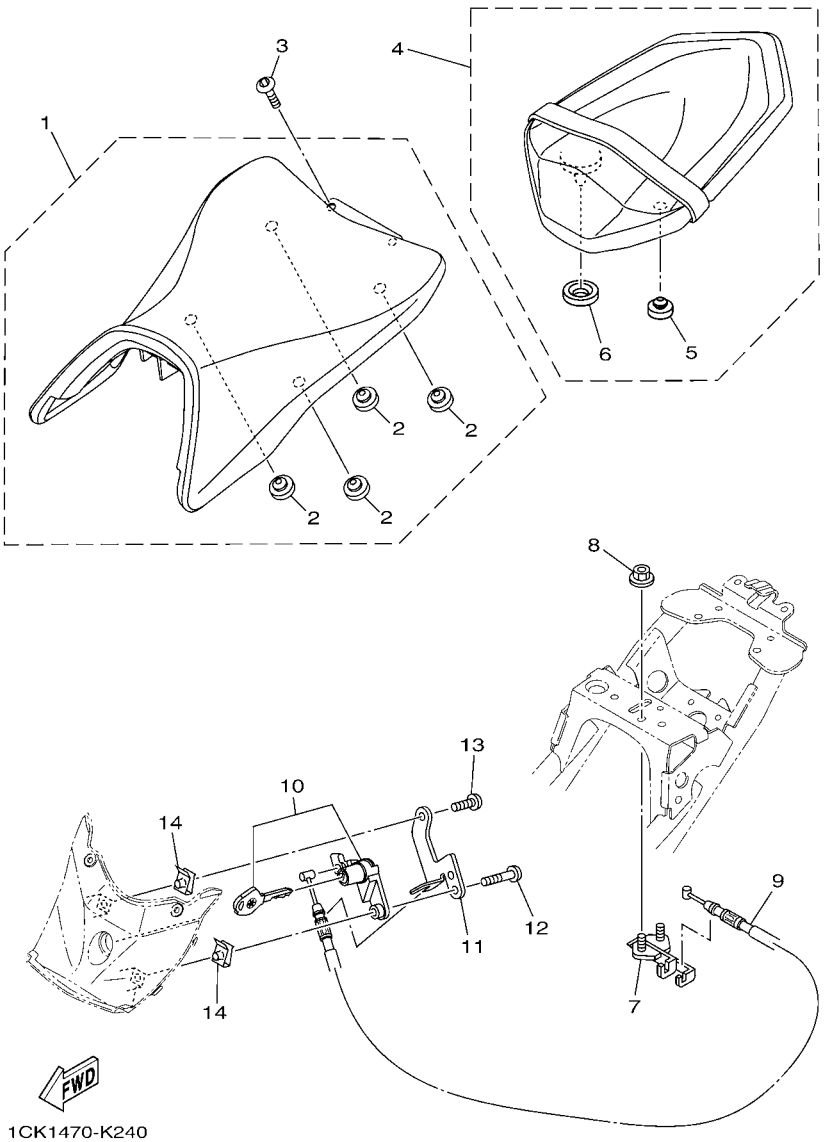

FIG. 24 ASIENTO SEAT

REF. Nº	CODIGO Nº PART NO.	DESCRIPCION DESCRIPTION	COL	CRI	ARG	AGO		OBSERVACIONES REMARKS
1	1CK–F4710–00	ASIENTO SIMPLE COMPLETO SINGLE SEAT ASSY	1	1	1	1		
2	20P–F4741–00	.COJIN DE ASIENTO .PAD, SEAT	4	4	4	4		
3	92012–08012	PERNO BOLT, BUTTON HEAD	2	2	2	2		
4	1CK–F4750–00	ASIENTO TANDEM COMPLETO TANDEM SEAT ASSY	1	1	1	1		
5	4LS–F4741–00	.COJIN DE ASIENTO .PAD, SEAT	1	1	1	1		
6	21C–F4763–00	.COJIN DE ASIENTO 2 .PAD, SEAT 2	1	1	1	1		
7	20P–F4780–00	CERRADURA SILLIN COMPLETO SEAT LOCK ASSY	1	1	1	1		
8	95707–06500	TUERCA DE BRIDA NUT, FLANGE	2	2	2	2		
9	1CK–F478E–00	CABLE CABLE, SEAT LOCK	1	1	1	1		
10	1CK–WF47E–00	ASIENTO DE CIERRE COMPLETO SEAT LOCK ASSY	1	1	1	1		
11	1CK–F117K–00	SOPORTE DE CERRADURA STAY, LOCK	1	1	1	1		
12	98507–05020	TORNILLO DE CABEZA PLANA SCREW, PAN HEAD	1	1	1	1		
13	98507–05012	TORNILLO DE CABEZA PLANA SCREW, PAN HEAD	1	1	1	1		
14	90183–05076	TUERCA DE RESORTE NUT,SPRING	2	2	2	2		

FIG. 25 RUEDA DELANTERA FRONT WHEEL

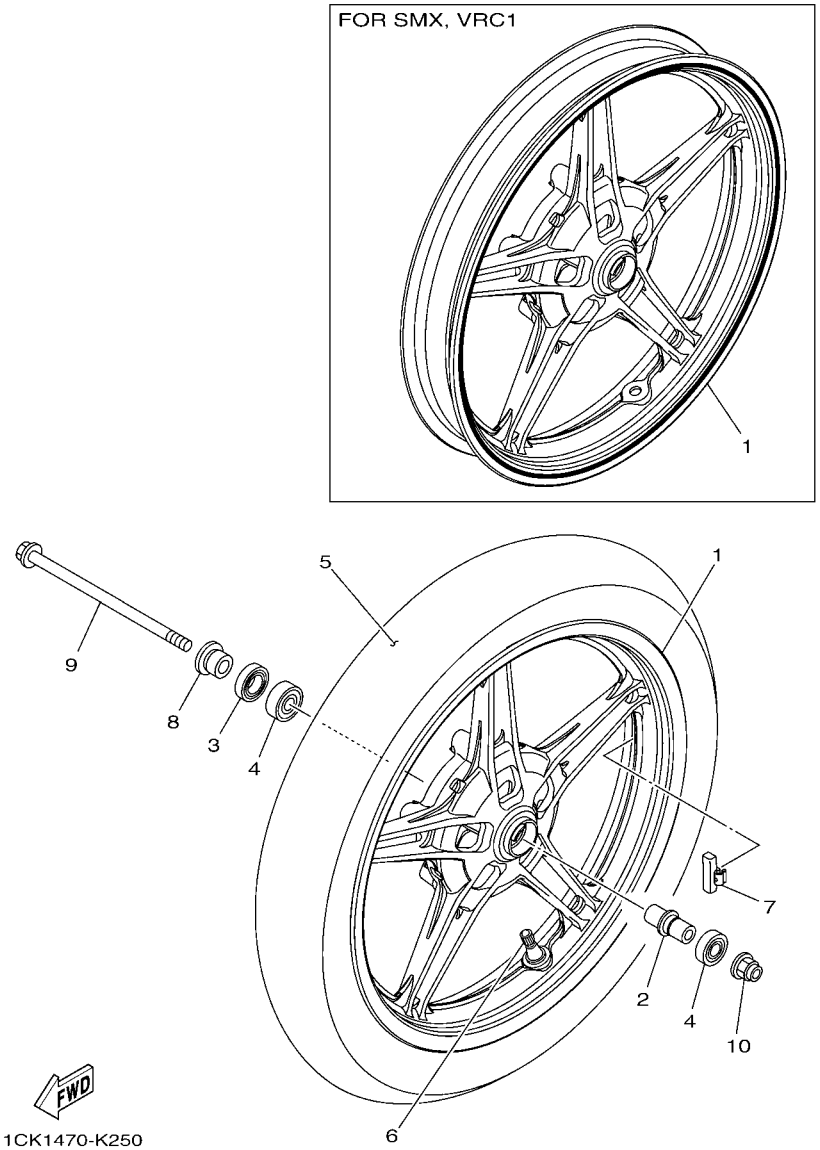

REF. Nº	CODIGO Nº PART NO.	DESCRIPCION DESCRIPTION	COL	CRI	ARG	AGO		OBSERVACIONES REMARKS
1	1CK–F5168–00	RUEDA FUNDIDA DELANTERA CAST WHEEL, FRONT	1	1	1	1		UR PARA DPBMY UR FOR DPBMY
	1CK–XF516–00	RUEDA FUNDIDA DELANTERA CAST WHEEL, FRONT	1	1	1	1		UR PARA SMX UR FOR SMX
	1CK–XF516–10	RUEDA FUNDIDA DELANTERA CAST WHEEL, FRONT	1	1	1	1		UR PARA VRC1 UR FOR VRC1
2	1CK–F510C–00	COLLAR COLLAR ASSY.	1	1	1	1		
3	93106–22808	SELLO ACEITE OIL SEAL	1	1	1	1		
4	93306–252YH	COJINETE BEARING	2	2	2	2		
5	94109–17803	NEUMATICO (90/80-17 M/C 46P) TIRE (90/80-17 M/C 46P)	1	1	1	1		MRF MRF
6	93900–00824	VALVULA VALVE, RIM	1	1	1	1		
7	5MT–25398–00	BALANCEADOR DE RUEDA (10G) BALANCER, WHEEL (10G)	1	1	1	1		UN UN
	5MT–25398–10	BALANCEADOR DE RUEDA (20G) BALANCER, WHEEL (20G)	1	1	1	1		UN UN
	5MT–25398–20	BALANCEADOR DE RUEDA (30G) BALANCER, WHEEL (30G)	1	1	1	1		UN UN
8	1CK–F5186–00	COLLAR DE RUEDA COLLAR, WHEEL	1	1	1	1		
9	1CK–F5181–00	EJE DE LA RUEDA AXLE, WHEEL	1	1	1	1		
10	95602–14200	TUERCA DE AUTO-CIERRE NUT, SELF-LOCKING	1	1	1	1		

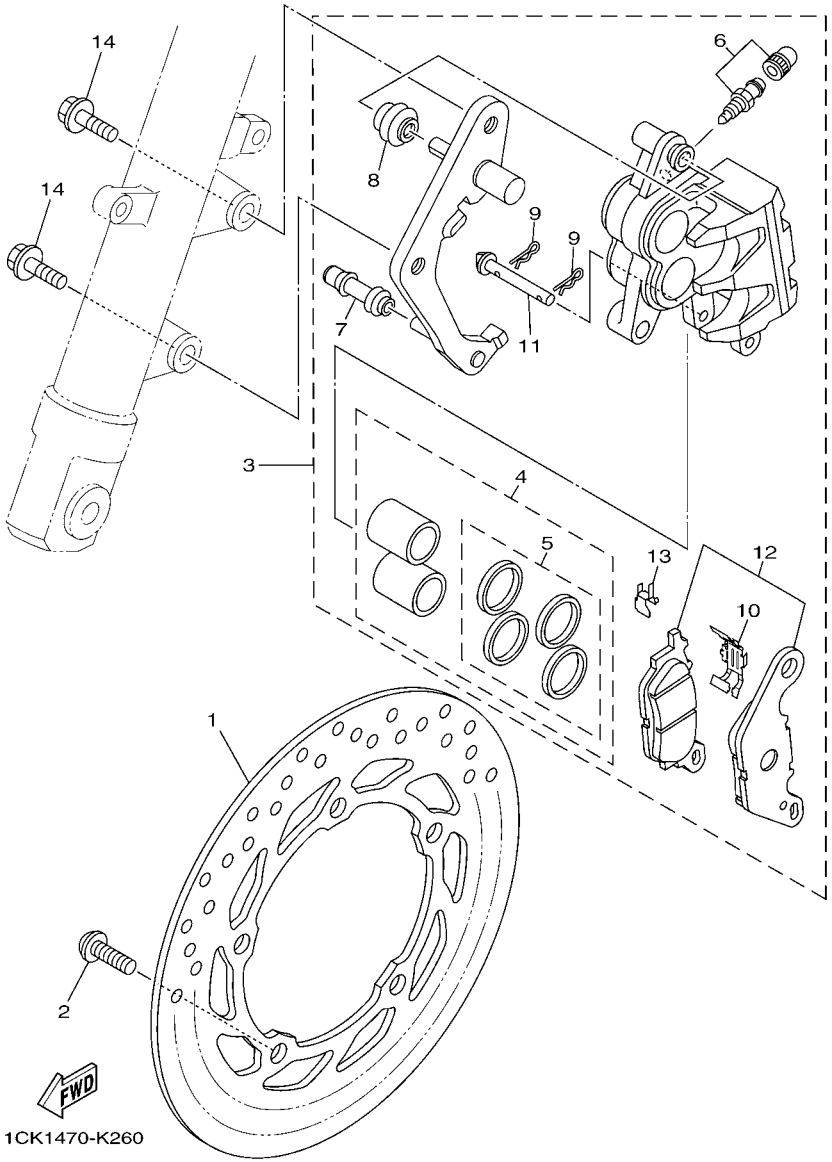

FIG. 26 CALIBRE FRENO DELANTERA FRONT BRAKE CALIPER

REF. Nº	CODIGO Nº PART NO.	DESCRIPCION DESCRIPTION	COL	CRI	ARG	AGO		OBSERVACIONES REMARKS
1	1CK–F582U–00	DISCO DE FRENO (DERECHO) DISK, BRAKE (RIGHT)	1	1	1	1		
2	90111–08847	TORNILLO BOLT,HEX. SOCKET BUTTON	5	5	5	5		
3	1CK–F580U–00	CALIBRE COMPLETO (DERECHO) CALIPER ASSY (RIGHT)	1	1	1	1		
4	3C1–W0057–00	.PISTON COMPLETO PINZA .PISTON ASSY, CALIPER	1	1	1	1		
5	3C1–W0047–00	..JUEGO DE RETENES DE PINZA ..CALIPER SEAL KIT	1	1	1	1		
6	4C9–W0048–00	.CJTO TORNILLO DE PURGA .BLEED SCREW KIT	1	1	1	1		
7	5YP–F5937–00	.FUNDA .BOOT 2	1	1	1	1		
8	5YP–F5917–00	.FUNDA DE CALIBRE .BOOT, CALIPER	1	1	1	1		
9	5YP–F5925–01	.PRESILLA .CLIP	1	1	1	1		
10	5P0–F5919–00	.SOPORTE DE PASTILLAS .SUPPORT, PAD	1	1	1	1		
11	5YP–F5924–00	.PASADOR .PIN, PAD	1	1	1	1		
12	3C1–W0045–10	.JUEGO DE COJIN DE FRENO .BRAKE PAD KIT	1	1	1	1		
13	5YP–F5939–00	.PRESILLA .CLIP, PAD	1	1	1	1		
14	90105–10082	TORNILLO BOLT, FLANGE	2	2	2	2		

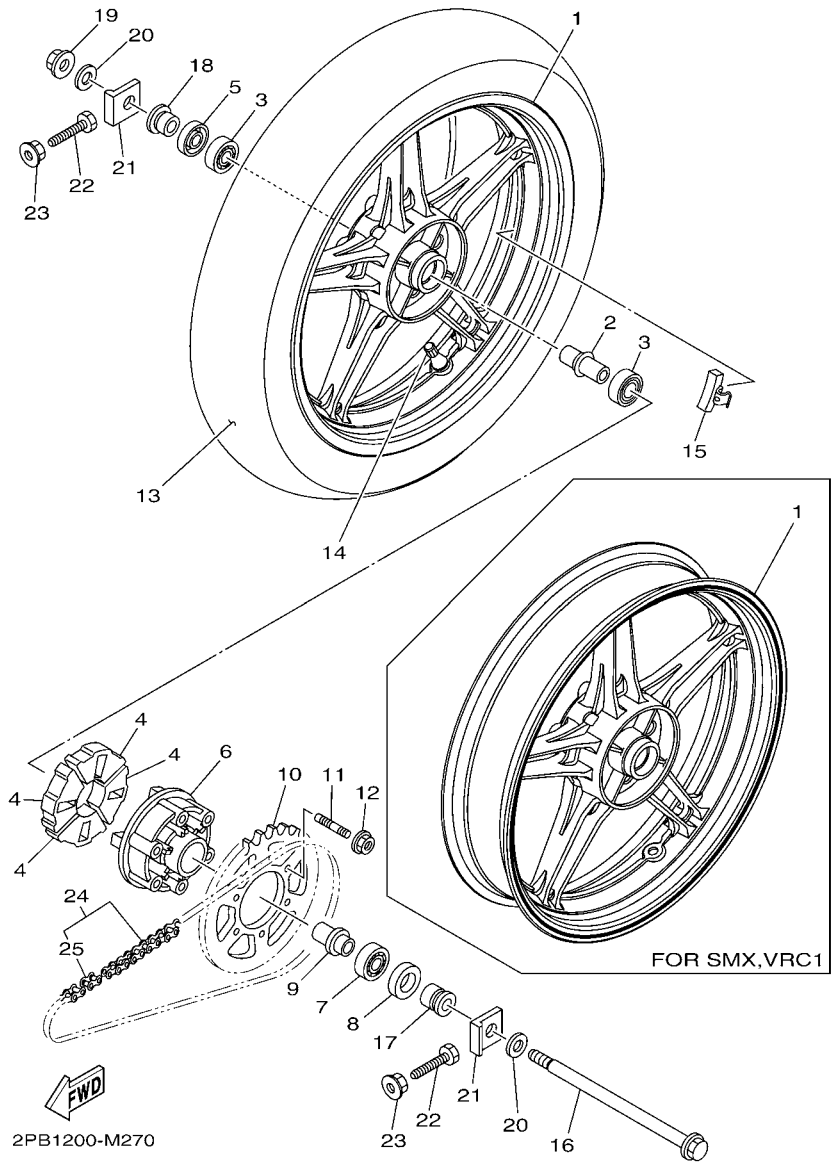

FIG. 27 RUEDA TRASERA REAR WHEEL

REF. Nº	CODIGO Nº PART NO.	DESCRIPCION DESCRIPTION	COL	CRI	ARG	AGO		OBSERVACIONES REMARKS
1	1CK–F5338–00	RUEDA FUNDIDA TRASERA CAST WHEEL, REAR	1	1	1	1		UR PARA DPBMY UR FOR DPBMY
	1CK–XF533–00	RUEDA FUNDIDA TRASERA CAST WHEEL, REAR	1	1	1	1		UR PARA SMX UR FOR SMX
	1CK–XF533–10	RUEDA FUNDIDA TRASERA CAST WHEEL, REAR	1	1	1	1		UR PARA VRC1 UR FOR VRC1
2	1CK–F530S–00	ASAMBLEA DE COLLAR COLLAR ASSY	1	1	1	1		
3	93306–252YH	COJINETE BEARING	2	2	2	2		
4	54B–F5364–00	AMORTIGUADOR DAMPER	4	4	4	4		
5	93106–22808	SELLO ACEITE OIL SEAL	1	1	1	1		
6	20P–F5366–00–33	EMBRAGUE DE MASA CLUTCH, HUB	1	1	1	1		YB YB
7	93306–054Y5	COJINETE BEARING	1	1	1	1		
8	93106–26801	SELLO ACEITE OIL SEAL	1	1	1	1		
9	1CK–F5377–00	COLLAR DE RUEDA COLLAR, WHEEL	1	1	1	1		
10	1CK–F5447–00	CORONA (47T) SPROCKET, DRIVEN (47T)	1	1	1	1		
11	90116–08834	ESPARRAGO BOLT, STUD	6	6	6	6		
12	95602–08200	TUERCA DE AUTO-CIERRE NUT, SELF-LOCKING	6	6	6	6		
13	94113–17806	NEUMATICO (130/70R17 M/C 62P) TIRE (130/70R17 M/C 62P)	1	1	1	1		MRF MRF
14	93900–00824	VALVULA VALVE, RIM	1	1	1	1		
15	5MT–25398–00	BALANCEADOR DE RUEDA (10G) BALANCER, WHEEL (10G)	1	1	1	1		UN UN
	5MT–25398–10	BALANCEADOR DE RUEDA (20G) BALANCER, WHEEL (20G)	1	1	1	1		UN UN
	5MT–25398–20	BALANCEADOR DE RUEDA (30G) BALANCER, WHEEL (30G)	1	1	1	1		UN UN
16	1CK–F5381–00	EJE DE RUEDA AXLE, WHEEL	1	1	1	1		
17	1CK–F5386–00	COLLAR EJE DE RUEDA DENTADA COLLAR, SPROCKET AXLE	1	1	1	1		
18	1CK–F5383–00	COLLAR DE RUEDA COLLAR, WHEEL	1	1	1	1		
19	95602–14200	TUERCA DE AUTO-CIERRE NUT, SELF-LOCKING	1	1	1	1		
20	90201–15837	ARANDELA PLANA WASHER, PLATE	2	2	2	2		
21	1CK–F5388–00	TIRADOR DE CADENA 1 PULLER, CHAIN 1	2	2	2	2		
22	90101–08006	TORNILLO BOLT	2	2	2	2		
23	95702–08500	TUERCA DE BRIDA NUT, FLANGE	2	2	2	2		

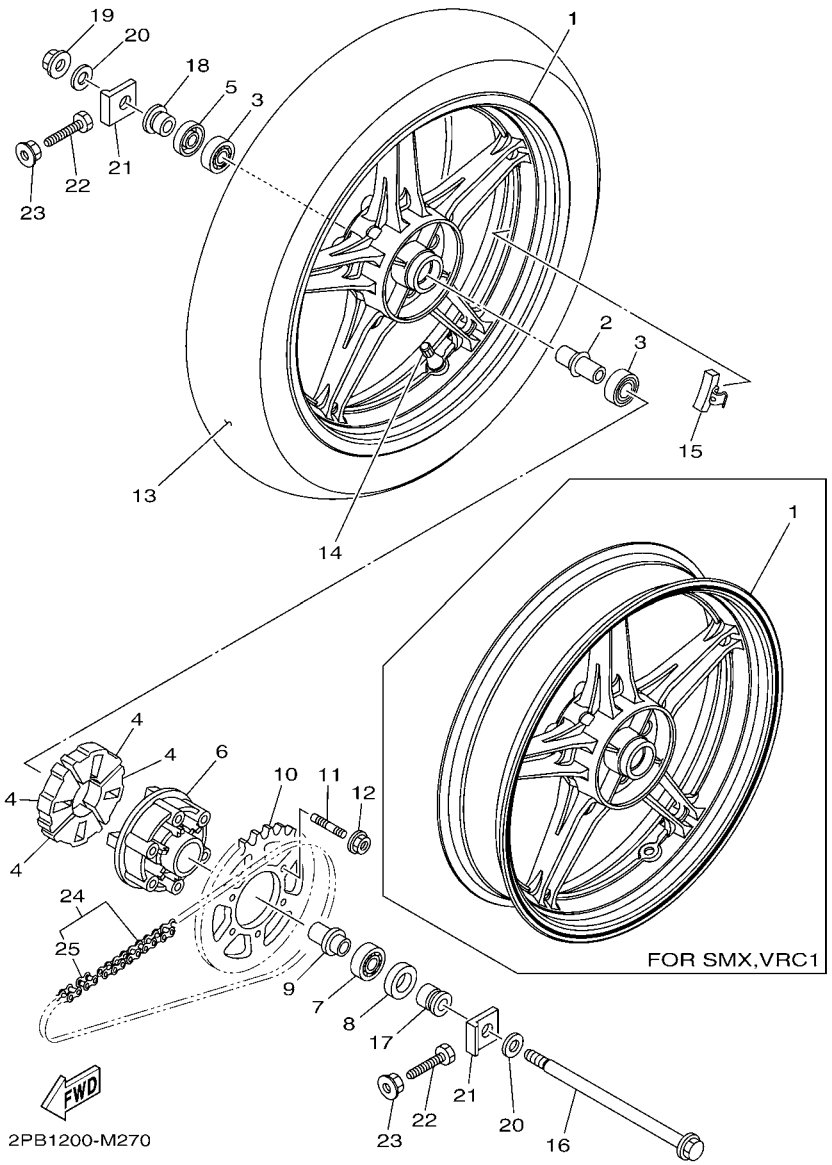

FIG. 27 RUEDA TRASERA REAR WHEEL

REF. Nº	CODIGO Nº PART NO.	DESCRIPCION DESCRIPTION	COL	CRI	ARG	AGO		OBSERVACIONES REMARKS
24	94568–E5132	CADENA (DID 428VIX 132LL) CHAIN (DID 428VIX 132LL)	1	1	1	1		
25	94668–E5021	.CONECTOR DE CADENA(DID 428VIX) .JOINT, CHAIN (DID 428VIX)	1	1	1	1		

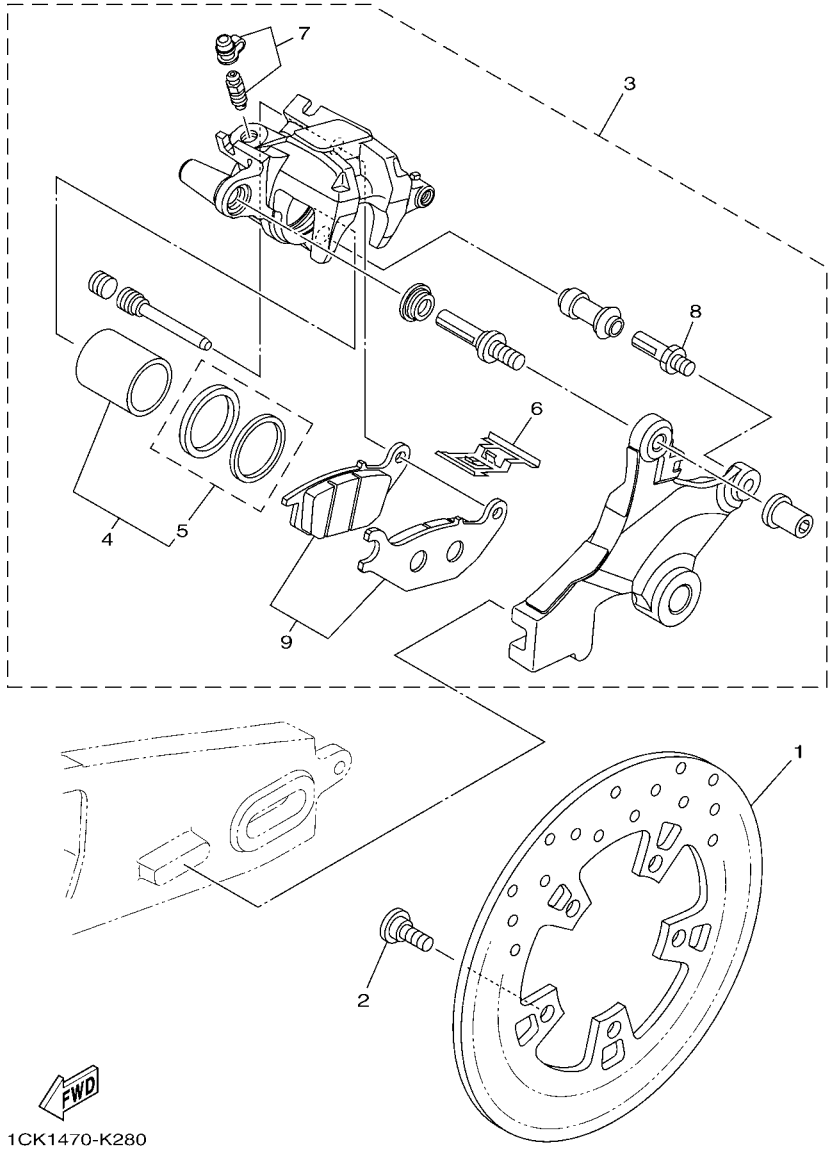

FIG. 28 CALIBRE FRENO TRASERA REAR BRAKE CALIPER

REF. Nº	CODIGO Nº PART NO.	DESCRIPCION DESCRIPTION	COL	CRI	ARG	AGO		OBSERVACIONES REMARKS
1	1CK–F582W–00	DISCO DE FRENO TRASEROS 2 DISK, REAR BRAKE 2	1	1	1	1		
2	90109–08015	PERNO BOLT	5	5	5	5		
3	2PB–F580W–00	CALIBRE COMPLETO TRASEROS 2 CALIPER ASSY, REAR 2	1	1	1	1		UR UR
	1CK–F580W–00	CALIBRE COMPLETO TRASEROS 2 CALIPER ASSY, REAR 2		1	1	1		UR UR
4	4S3–W0057–00	.PISTON COMPLETO PINZA .PISTON ASSY, CALIPER	1	1	1	1		
5	3GD–W0047–00	..JUEGO DE RETENES DE PINZA ..CALIPER SEAL KIT	1	1	1	1		
6	4S3–F5919–00	.SOPORTE DE PASTILLAS .SUPPORT, PAD	1	1	1	1		
7	4S3–W0048–00	.CJTO TORNILLO DE PURGA .BLEED SCREW KIT	1	1	1	1		
8	3SP–F5914–51	.PASADOR .PIN, SLIDE	1	1	1	1		
9	4S3–W0045–00	.JUEGO DE COJIN DE FRENO .BRAKE PAD KIT	1	1	1	1		UR UR
	20P–W0046–00	.JUEGO DE PASTILLAS DE FRENO 2 .BRAKE PAD KIT 2		1	1	1		UR UR

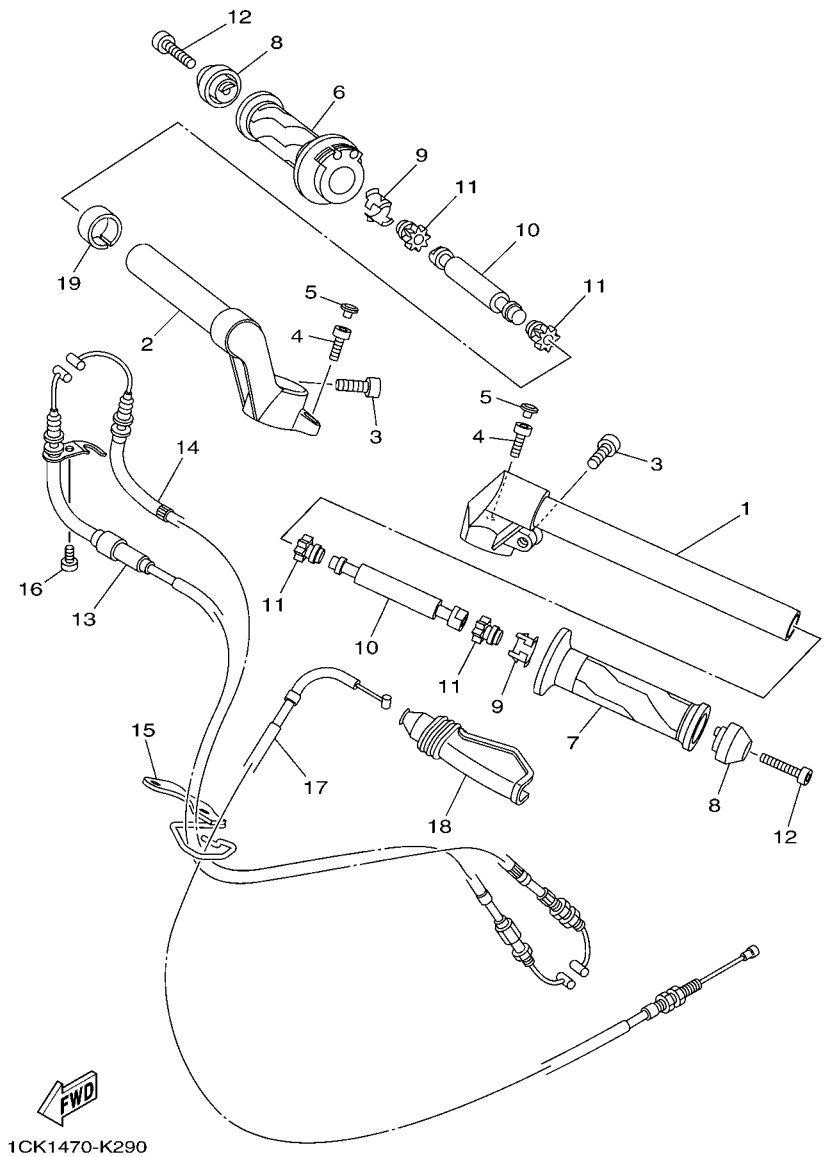

FIG. 29 MANILLAR & CABLE — STEERING HANDLE & CABLE

REF. Nº	CODIGO Nº PART NO.	DESCRIPCION DESCRIPTION	COL	CRI	ARG	AGO		OBSERVACIONES REMARKS
1	20P–F6121–00	MANUBRIO (MI) HANDLEBAR (LEFT)	1	1	1	1		
2	20P–F6122–00	MANUBRIO (MD) HANDLEBAR (RIGHT)	1	1	1	1		
3	91317–08025	PERNO BOLT	2	2	2	2		
4	91317–06020	PERNO BOLT	2	2	2	2		
5	20P–F3469–00	TAPA DE PERNO CAP, BOLT	2	2	2	2		
6	1CK–F6240–00	EMPUNADURA COMPLETA GRIP ASSY	1	1	1	1		
7	20P–F6241–00	EMPUNADURA GRIP	1	1	1	1		
8	20P–F6246–00	EXTREMO DE EMPUNADURA END, GRIP	2	2	2	2		
9	20P–F6257–00	TOPE STOPPER	2	2	2	2		
10	20P–F622H–00	CONTRAPESO WEIGHT	2	2	2	2		
11	20P–F622F–00	AMORTIGUADOR, DE UBICACION 1 DAMPER, LOCATING 1	4	4	4	4		
12	91317–06030	PERNO BOLT	2	2	2	2		
13	1CK–F6311–00	CABLE DE ACELERADOR 1 CABLE, THROTTLE 1	1	1	1	1		
14	1CK–F6312–00	CABLE DE ACELERADOR 2 CABLE, THROTTLE 2	1	1	1	1		
15	20P–F6315–00	GUIA DE CABLE GUIDE, WIRE	1	1	1	1		
16	98507–05012	TORNILLO DE CABEZA PLANA SCREW, PAN HEAD	1	1	1	1		
17	20P–F6335–00	CABLE DE EMBRAGUE CABLE, CLUTCH	1	1	1	1		
18	20P–F6372–00	CUBIERTA DE PALANCA DE MANUB 1 COVER, HANDLE LEVER 1	1	1	1	1		
19	90387–22591	ESPACIADOR COLLAR	1	1	1	1		

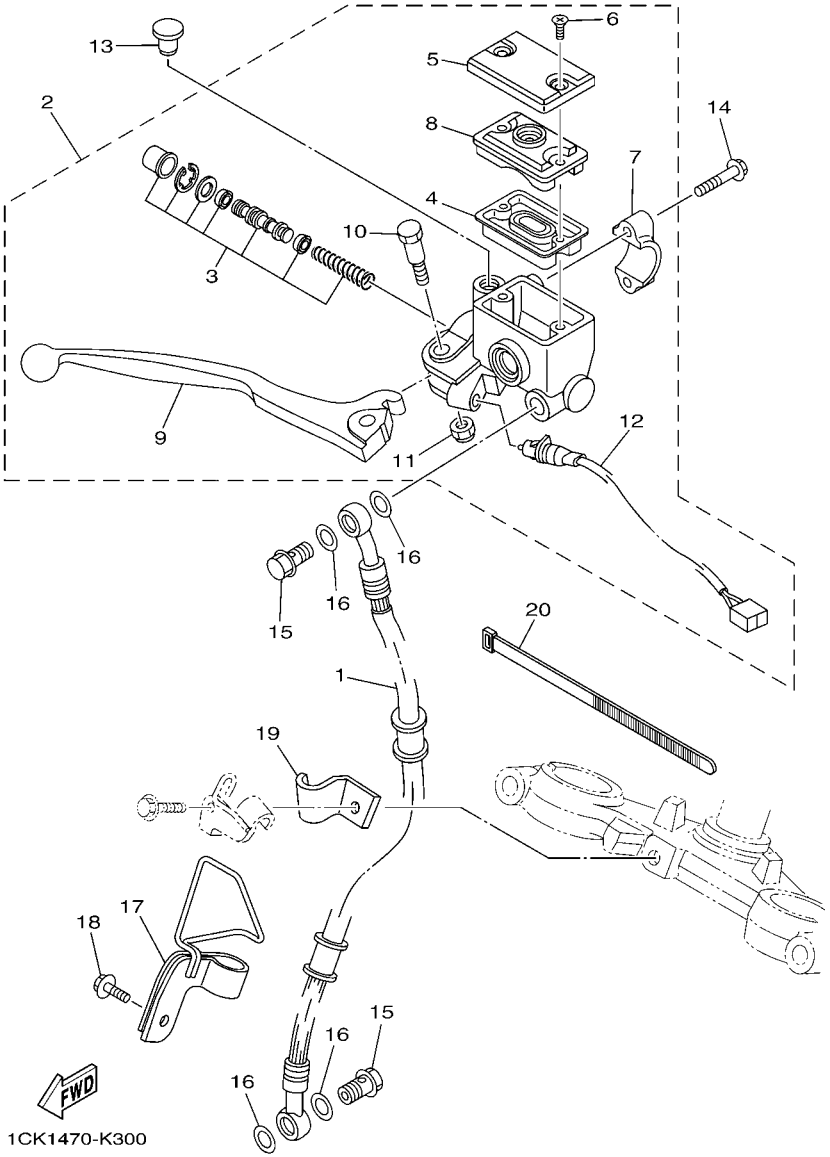

FIG. 30 CILINDRO MAESTRO DELANTERO FRONT MASTER CYLINDER

REF. Nº	CODIGO Nº PART NO.	DESCRIPCION DESCRIPTION	COL	CRI	ARG	AGO		OBSERVACIONES REMARKS
1	20P–F5872–00	MANGUERA DE FRENO 1 HOSE, BRAKE 1	1	1	1	1		
2	1CK–F583T–00	CILINDRO MAESTRO COMPLETO MASTER CYLINDER ASSY	1	1	1	1		
3	5P0–W0041–10	.JUEGO DE CILINDRO MAESTRO .CYLINDER KIT, MASTER	1	1	1	1		
4	3RW–F5854–00	.EMPAQUE,DIAFRAGMA .DIAPHRAGM, RESERVOIR	1	1	1	1		
5	3C1–F5852–00	.TAPA DE TANQUE DE RESERVA .CAP, RESERVOIR	1	1	1	1		
6	36Y–2589H–00	.TORNILLO .SCREW	2	2	2	2		
7	3RW–F5867–00	.SOPORTE DE CILINDRO MAESTRO .BRACKET, MASTER CYLINDER	1	1	1	1		
8	3C1–F5855–00	.BUJE DE DIAFRAGMA .BUSH,DIAPHRAGM	1	1	1	1		
9	38B–H3922–00	.PALANCA 2 .LEVER 2	1	1	1	1		
10	90109–06577	.PERNO .BOLT	1	1	1	1		
11	95602–06100	.TUERCA U .NUT, U	1	1	1	1		
12	1CK–H3980–00	.INTERRUP. DE PARADA DELANTERO .FRONT STOP SWITCH ASSY	1	1	1	1		
13	90338–09802	TAPON PLUG	1	1	1	1		
14	95027–06025	PERNO, DE BRIDA BOLT, FLANGE	2	2	2	2		
15	90401–10820	PERNO DE UNION BOLT, UNION	2	2	2	2		
16	90201–10118	ARANDELA PLANA WASHER, PLATE	4	4	4	4		
17	1CK–F5886–00	SOPORTE DE MANGUERA FRENO HOLDER, BRAKE HOSE	1	1	1	1		
18	95027–06014	PERNO, DE BRIDA BOLT, FLANGE	1	1	1	1		
19	20P–F5876–00	SOPORTE DE MANGUERA FRENO 2 HOLDER, BRAKE HOSE 2	1	1	1	1		
20	437–83936–11	BANDA DE CABLE DE INTERRUPTOR BAND, SWITCH CORD	1	1	1	1		

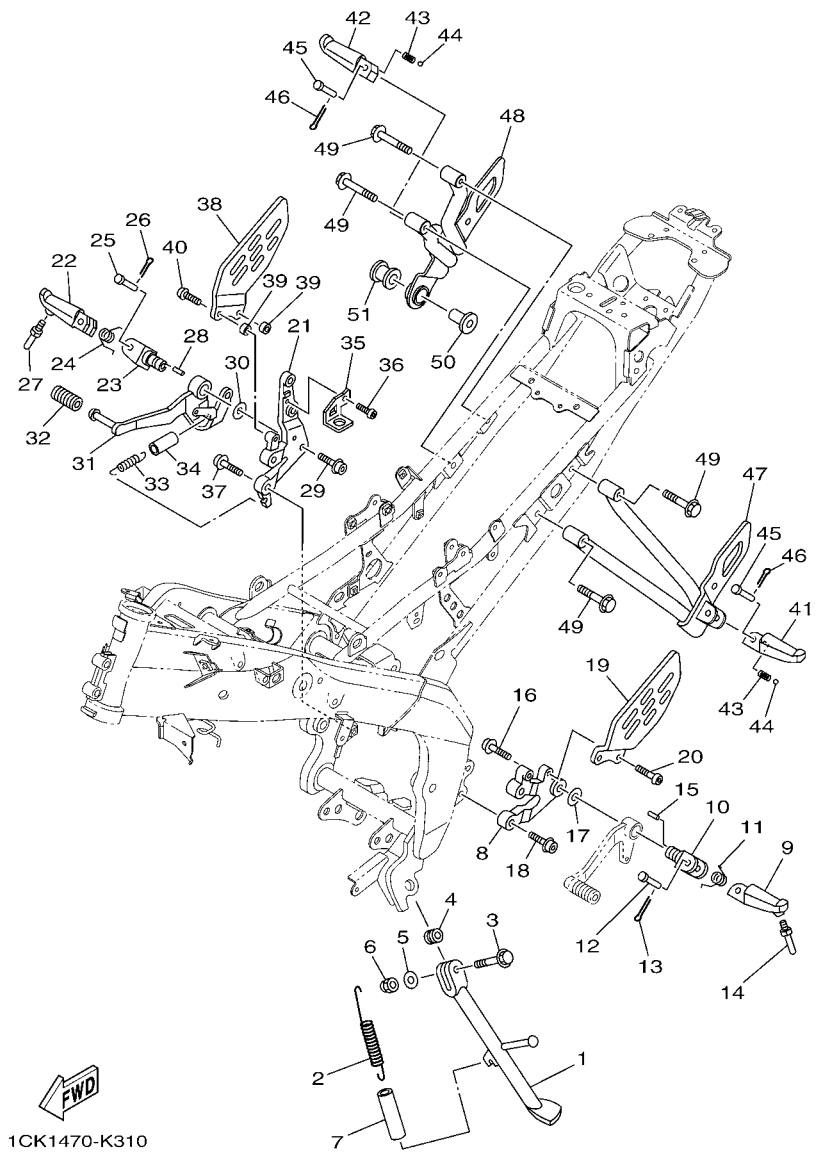

FIG. 31 SOPORTE & APOYAPIE STAND & FOOTREST

REF. Nº	CODIGO Nº PART NO.	DESCRIPCION DESCRIPTION	COL	CRI	ARG	AGO		OBSERVACIONES REMARKS
1	20P–F7311–00	PUNTAL LATERAL STAND, SIDE	1	1	1	1		
2	90506–28800	RESORTE DE TENSION SPRING, TENSION	1	1	1	1		
3	90105–106A7	TORNILLO BOLT, FLANGE	1	1	1	1		
4	90387–10003	ESPACIADOR COLLAR	1	1	1	1		
5	92907–10600	ARANDELA WASHER, PLATE	1	1	1	1		
6	95617–10100	PERNO DE PUNTAL NUT, U	1	1	1	1		
7	90445–21848	TUBO (L70) HOSE (L70)	1	1	1	1		
8	20P–F7442–00	SOPORTE 2 BRACKET 2	1	1	1	1		
9	20P–F7451–00	APOYAPIE FOOTREST	1	1	1	1		
10	20P–F7411–00	APOYAPIE 1 FOOTREST 1	1	1	1	1		
11	90508–183B9	RESORTE DE TORSION SPRING, TORSION	1	1	1	1		
12	90240–08800	PASADOR CON HOYO PIN, CLEVIS	1	1	1	1		
13	91401–20012	CHAVETA PIN, COTTER	1	1	1	1		
14	20P–F7435–00	PERNO BOLT	1	1	1	1		
15	90249–02002	PASADOR PIN	1	1	1	1		
16	90110–10012	TORNILLO ALLEN BOLT, HEXAGON SOCKET HEAD	1	1	1	1		
17	90201–10066	ARANDELA PLANA WASHER, PLATE	1	1	1	1		
18	90110–08814	TORNILLO ALLEN BOLT, HEXAGON SOCKET HEAD	2	2	2	2		
19	20P–F7445–00	PLACE 1 PLATE 1	1	1	1	1		
20	92012–06016	PERNO BOLT, BUTTON HEAD	2	2	2	2		
21	20P–F7443–00	SOPORTE 3 BRACKET 3	1	1	1	1		
22	20P–F7461–00	APOYAPIE FOOTREST	1	1	1	1		
23	20P–F7411–00	APOYAPIE 1 FOOTREST 1	1	1	1	1		
24	90508–184B0	RESORTE DE TORSION SPRING, TORSION	1	1	1	1		
25	90240–08800	PASADOR CON HOYO PIN, CLEVIS	1	1	1	1		
26	91401–20012	CHAVETA PIN, COTTER	1	1	1	1		
27	20P–F7435–00	PERNO BOLT	1	1	1	1		

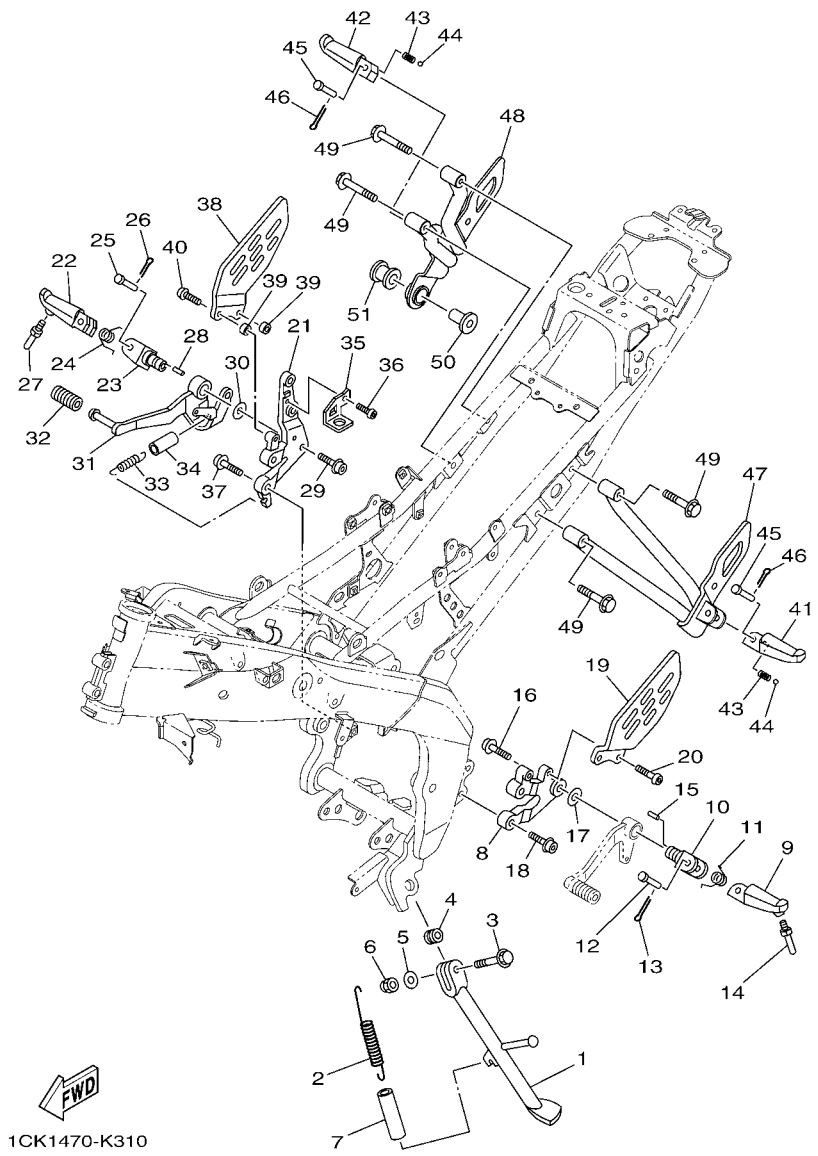

FIG. 31 SOPORTE & APOYAPIE — STAND & FOOTREST

REF. Nº	CODIGO Nº PART NO.	DESCRIPCION DESCRIPTION	COL	CRI	ARG	AGO		OBSERVACIONES REMARKS
28	90249–02002	PASADOR PIN	1	1	1	1		
29	90110–10012	TORNILLO ALLEN BOLT, HEXAGON SOCKET HEAD	1	1	1	1		
30	90201–10066	ARANDELA PLANA WASHER, PLATE	1	1	1	1		
31	1CK–F7211–00	PEDAL DE FRENO PEDAL, BRAKE	1	1	1	1		
32	20P–E8113–00	FUNDA DEL PEDAL DEL CAMBIO COVER, SHIFT PEDAL	1	1	1	1		
33	90506–20193	RESORTE DE TENSION SPRING, TENSION	1	1	1	1		
34	90445–16807	TUBO HOSE	1	1	1	1		
35	1CK–F144G–00	SOPORTE DE INTERRUPTOR STAY, STOP SWITCH	1	1	1	1		
36	92012–06010	PERNO BOLT, BUTTON HEAD	1	1	1	1		
37	90110–08814	TORNILLO ALLEN BOLT, HEXAGON SOCKET HEAD	2	2	2	2		
38	20P–F7446–01	PLACE 2 PLATE 2	1	1	1	1		
39	90387–068H8	ESPACIADOR COLLAR	2	2	2	2		
40	92012–06020	PERNO BOLT, BUTTON HEAD	2	2	2	2		
41	20P–F7431–00	APOYAPIE POSTERIOR 1 FOOTREST, REAR 1	1	1	1	1		
42	20P–F7441–00	APOYAPIE POSTERIOR 2 FOOTREST, REAR 2	1	1	1	1		
43	90501–12743	RESORTE DE COMPRESION SPRING, COMPRESSION	2	2	2	2		
44	93501–04805	BOLA BALL	2	2	2	2		
45	90240–08800	PASADOR CON HOYO PIN, CLEVIS	2	2	2	2		
46	91401–20012	CHAVETA PIN, COTTER	2	2	2	2		
47	1CK–F741L–00	MENSULA 4 BRACKET 4	1	1	1	1		
48	1CK–F742L–00	MENSULA 5 BRACKET 5	1	1	1	1		
49	95817–08012	TORNILLO BOLT, FLANGE	4	4	4	4		
50	90387–08812	ESPACIADOR COLLAR	1	1	1	1		
51	20P–E4747–00	AMORTIGUADOR DE SILENCIADOR DAMPER, MUFFLER	1	1	1	1		

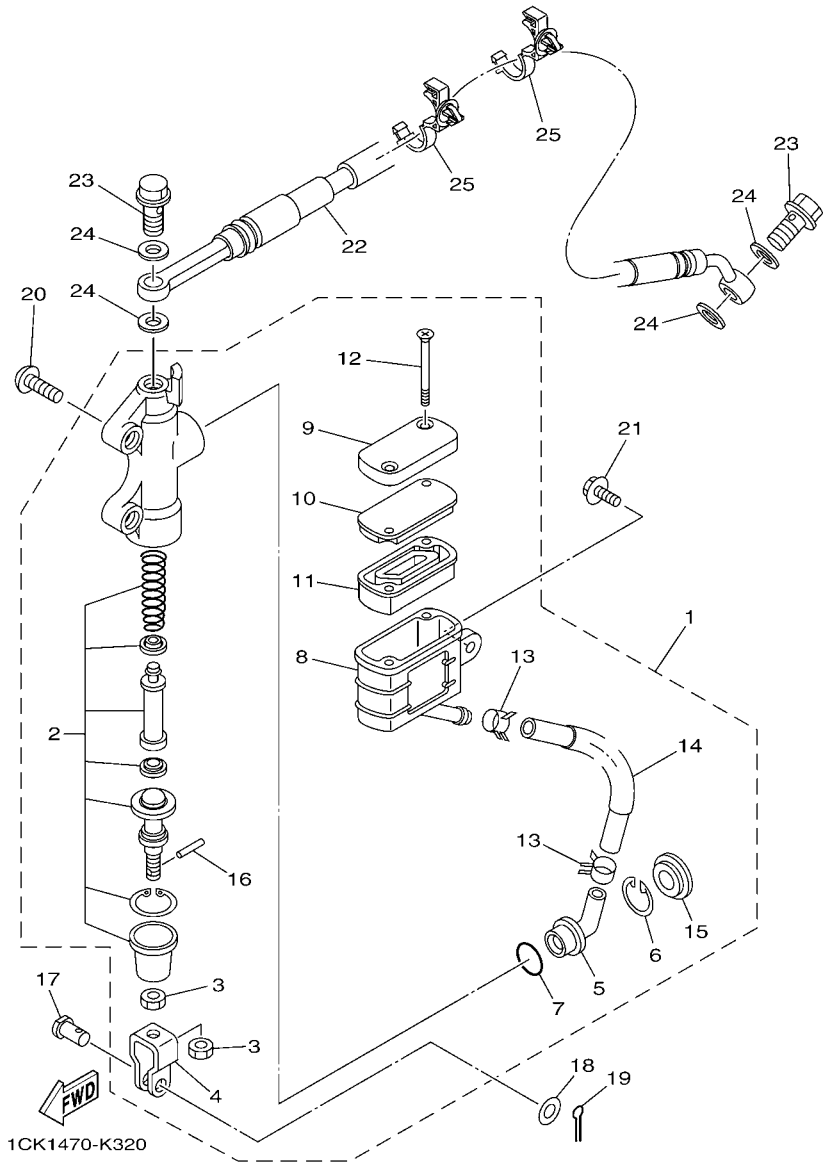

FIG. 32 CILINDRO MAESTRO TRASERO REAR MASTER CYLINDER

REF. Nº	CODIGO Nº PART NO.	DESCRIPCION DESCRIPTION	COL	CRI	ARG	AGO		OBSERVACIONES REMARKS
1	1CK–F583V–00	CILINDRO, MAESTRO TRASERO RR. MASTER CYLINDER ASSY.	1	1	1	1		
2	20P–W0042–00	.JUEGO DE CILINDRO MAESTRO .CYLINDER KIT, MASTER	1	1	1	1		
3	95301–08700	.TUERCA HEXAGONAL .NUT	2	2	2	2		
4	2YK–F7222–00	.UNION .JOINT	1	1	1	1		
5	4ML–F582A–50	.CONECTOR .JOINT	1	1	1	1		
6	2VN–F5866–00	.PRESILLA REDONDA .CIRCLIP	1	1	1	1		
7	93210–15620	.ANILLO O .O-RING	1	1	1	1		
8	20P–F5894–00	.TANQUE DE RESERVA .TANK, RESERVOIR	1	1	1	1		
9	54C–F5852–00	.TAPA DE TANQUE DE RESERVA .CAP, RESERVOIR	1	1	1	1		
10	20P–F585B–00	.PLACA, DIAFRAGMA .PLATE, DIAPHRAGM	1	1	1	1		
11	20P–F5854–00	.EMPAQUE,DIAFRAGMA .DIAPHRAGM, RESERVOIR	1	1	1	1		
12	98707–04045	.TORNILLO DE CABEZA PLANA .SCREW, FLAT HEAD	2	2	2	2		
13	90467–12085	.PRESILLA .CLIP	2	2	2	2		
14	1CK–F5895–00	.MANGUERA DE TANQUE DE RESERVA .HOSE, RESERVOIR	1	1	1	1		
15	3FV–F589A–00	.CUBIERTA PARA POLVO .COVER, DUST	1	1	1	1		
16	4TT–F7238–00	.PASADOR .PIN	1	1	1	1		
17	90240–08124	PASADOR CON HOYO PIN, CLEVIS	1	1	1	1		
18	90201–08083	ARANDELA PLANA WASHER, PLATE	1	1	1	1		
19	91401–20012	CHAVETA PIN, COTTER	1	1	1	1		
20	92012–08020	PERNO BOLT, BUTTON HEAD	2	2	2	2		
21	90119–06044	TORNILLO CON ARANDELA BOLT, WITH WASHER	1	1	1	1		
22	1CK–25873–00	MANGUERA DE FRENO 2 HOSE, BRAKE 2	1	1	1	1		
23	90401–10820	PERNO DE UNION BOLT, UNION	2	2	2	2		
24	90201–10118	ARANDELA PLANA WASHER, PLATE	4	4	4	4		
25	90464–17003	BRIDA CLAMP	2	2	2	2		

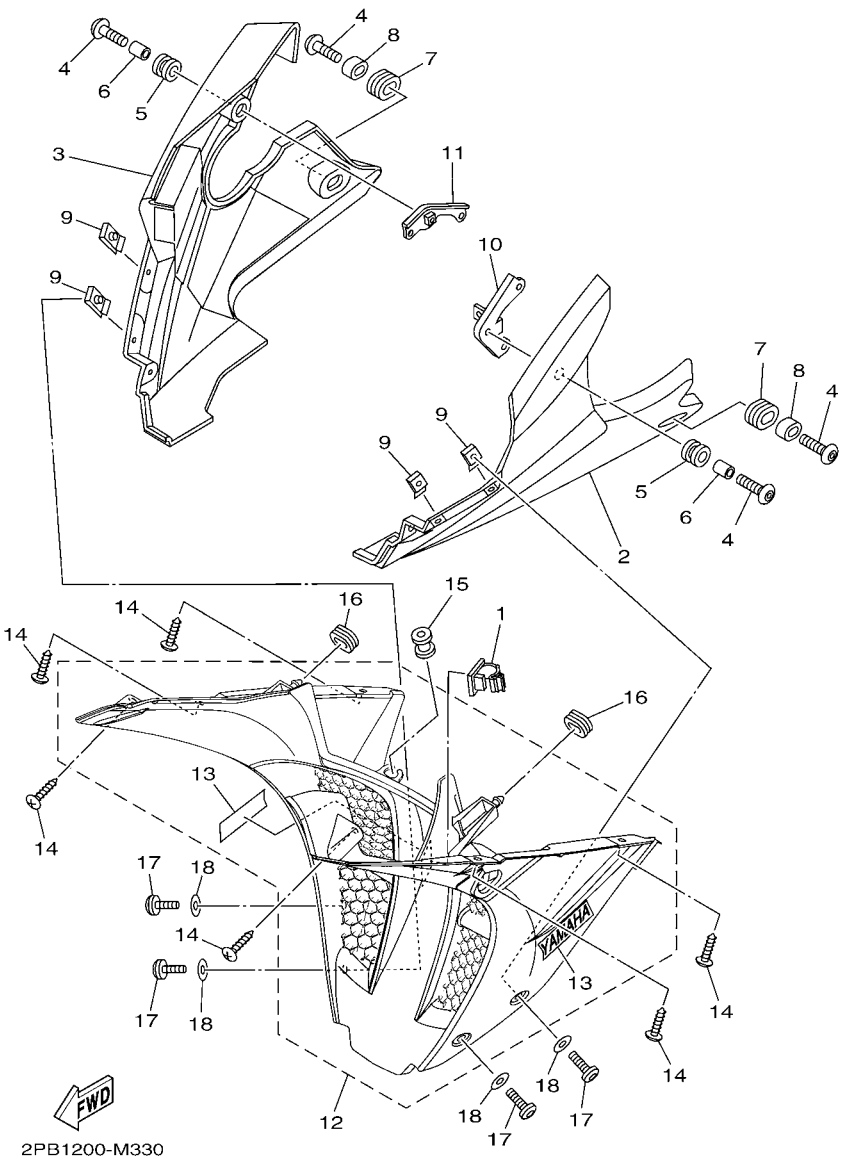

FIG. 33 PATA PROTEGIDA LEG SHIELD

REF. Nº	CODIGO Nº PART NO.	DESCRIPCION DESCRIPTION	COL	CRI	ARG	AGO		OBSERVACIONES REMARKS
1	90464–54086	BRIDA CLAMP	1	1	1	1		
2	20P–F8385–10–P0	CUBIERTA INFERIOR COVER, UNDER	1	1	1	1		UR SMX PARA DPBMY UR SMX FOR DPBMY
	20P–F8385–10–P2	CUBIERTA INFERIOR COVER, UNDER	1	1	1	1		UR DBNM8 PARA SMX UR DBNM8 FOR SMX
	20P–F8385–10–P3	CUBIERTA INFERIOR COVER, UNDER	1	1	1	1		UR BWC1 PARA VRC1 UR BWC1 FOR VRC1
3	20P–F8395–11–P0	CUBIERTA INFERIOR COVER, UNDER 2	1	1	1	1		UR SMX PARA DPBMY UR SMX FOR DPBMY
	20P–F8395–11–P2	CUBIERTA INFERIOR COVER, UNDER 2	1	1	1	1		UR DBNM8 PARA SMX UR DBNM8 FOR SMX
	20P–F8395–11–P3	CUBIERTA INFERIOR COVER, UNDER 2	1	1	1	1		UR BWC1 PARA VRC1 UR BWC1 FOR VRC1
4	90111–06117	TORNILLO BOLT,HEX. SOCKET BUTTON	4	4	4	4		
5	90480–14003	TAPON GROMMET	2	2	2	2		
6	90387–068C2	ESPACIADOR COLLAR	2	2	2	2		
7	90480–01811	TAPON GROMMET	2	2	2	2		
8	20P–F1749–00	COLLAR COLLAR	2	2	2	2		
9	90183–05061	TUERCA DE RESORTE NUT, SPRING	4	4	4	4		
10	54C–F831U–00	APOYO 1 STAY, SIDE 1	1	1	1	1		
11	20P–F832U–00	APOYO 1 STAY, SIDE 1	1	1	1	1		
12	1CK–XF83D–00	PANEL 3 PANEL, INNER 3	1	1	1	1		UR PARA DPBMY UR FOR DPBMY
	1CK–XF83D–10–P0	PANEL 3 PANEL, INNER 3	1	1	1	1		UR DBNM8 PARA SMX UR DBNM8 FOR SMX
	1CK–XF83D–20–P1	PANEL 3 PANEL, INNER 3	1	1	1	1		UR BWC1 PARA VRC1 UR BWC1 FOR VRC1
13	99241–00140	.EMBLEMA, YAMAHA .EMBLEM, YAMAHA	2	2	2	2		UR PARA DPBMY UR FOR DPBMY
	99246–00140	.EMBLEMA, YAMAHA .EMBLEM, YAMAHA	2	2	2	2		UR PARA SMX UR FOR SMX
	99244–00140	.EMBLEMA, YAMAHA .EMBLEM, YAMAHA	2	2	2	2		UR PARA VRC1 UR FOR VRC1
14	97707–50012	TORNILLO SCREW, TRUSS HEAD TAPPING	6	6	6	6		
15	20P–F1773–00	ANILLO PROTECTOR GROMMET	1	1	1	1		
16	90480–01559	TAPON GROMMET	2	2	2	2		
17	90111–05003	TORNILLO BOLT,HEX. SOCKET BUTTON	4	4	4	4		
18	90202–05180	ARANDELA DE PLANA WASHER, PLATE	4	4	4	4		

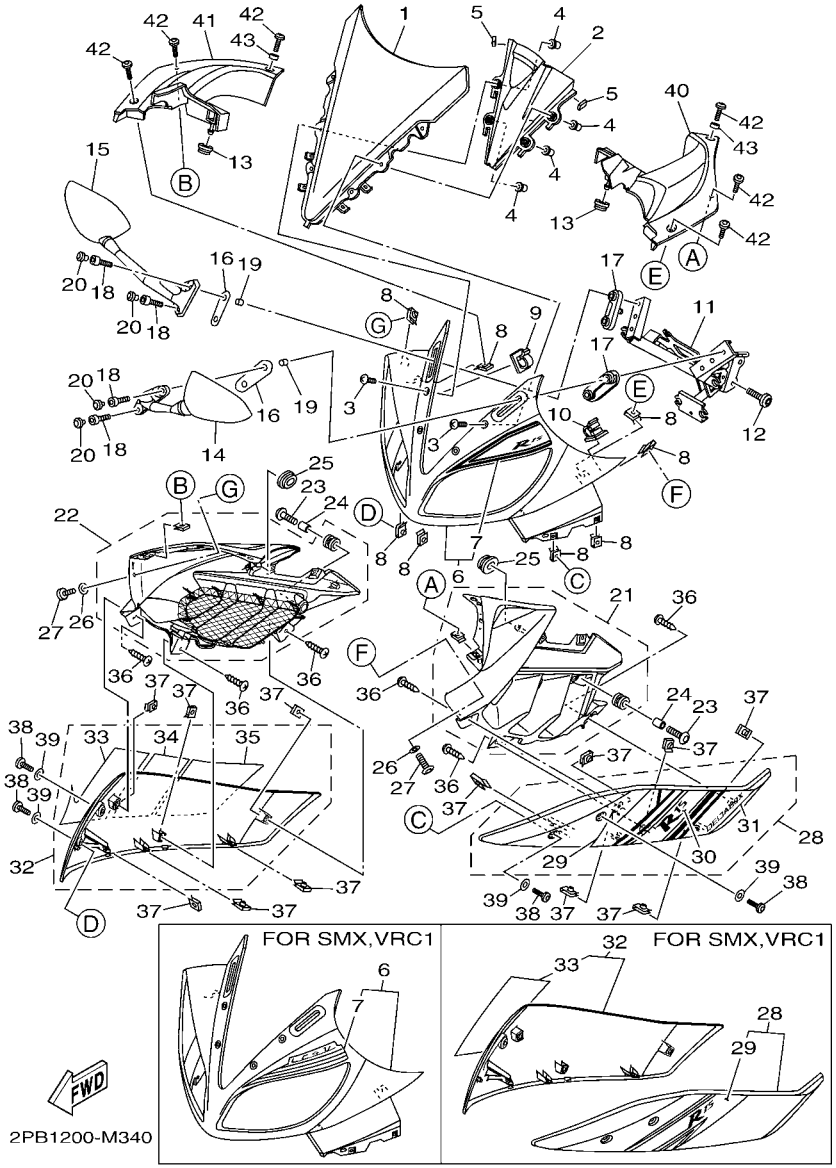

FIG. 34 PARABRISAS WINDSHIELD

REF. Nº	CODIGO Nº PART NO.	DESCRIPCION DESCRIPTION	COL	CRI	ARG	AGO		OBSERVACIONES REMARKS
1	1CK–F8381–00	PARABRISA WINDSHIELD	1	1	1	1		
2	20P–F836R–00	PANEL 5 PANEL, INNER 5	1	1	1	1		
3	90150–05024	TORNILLO CABEZA REDONDA SCREW, ROUND HEAD	4	4	4	4		
4	90179–05523	TUERCA NUT	4	4	4	4		
5	90520–02810	EQUILIBRIO, CUBIERTA DAMPER, PLATE	2	2	2	2		
6	1CK–XF835–00–P0	REFLECTOR PANEL ASSY	1	1	1	1		UR PARA DPBMY UR FOR DPBMY
	1CK–XF835–10–P1	REFLECTOR PANEL ASSY	1	1	1	1		UR PARA SMX UR FOR SMX
	1CK–XF835–20–P4	REFLECTOR PANEL ASSY	1	1	1	1		UR PARA VRC1 UR FOR VRC1
7	1CK–F842G–00	.EMBLEMA 2 .GRAPHIC, 2	1	1	1	1		UR PARA DPBMY UR FOR DPBMY
	1CK–F841G–00	.CALCOMANIA DE BOVEDA 1 .GRAPHIC, 1	1	1	1	1		UR PARA SMX UR FOR SMX
	1CK–F841G–10	.CALCOMANIA DE BOVEDA 1 .GRAPHIC, 1	1	1	1	1		UR PARA VRC1 UR FOR VRC1
8	90183–05061	TUERCA DE RESORTE NUT, SPRING	8	8	8	8		
9	90464–20021	BRIDA CLAMP	1	1	1	1		
10	90464–54086	BRIDA CLAMP	1	1	1	1		
11	20P–F8356–01	SOPORTE 1 STAY 1	1	1	1	1		
12	90111–08836	TORNILLO BOLT,HEX. SOCKET BUTTON	2	2	2	2		
13	90480–01558	TAPON GROMMET	2	2	2	2		
14	2PB–F6280–00	ESPEJO COMPLETO (IZQUIERDO) REAR VIEW MIRROR ASSY (LEFT)	1	1	1	1		
15	2PB–F6290–00	ESPEJO COMPLETO (DERECHO) REAR VIEW MIRROR ASSY (RIGHT)	1	1	1	1		
16	20P–F8483–00	PLACA 1 PLATE, RUBBER 1	2	2	2	2		
17	20P–F8484–00	PLACA 2 PLATE, RUBBER 2	2	2	2	2		
18	91317–06025	PERNO BOLT	4	4	4	4		
19	90387–068C2	ESPACIADOR COLLAR	4	4	4	4		
20	20P–F3469–00	TAPA DE PERNO CAP, BOLT	4	4	4	4		
21	1CK–XF11E–00–P0	CUBIERTA 7 COVER 7	1	1	1	1		UR PARA DPBMY UR FOR DPBMY
	1CK–XF11E–10–P1	CUBIERTA 7 COVER 7	1	1	1	1		UR PARA SMX UR FOR SMX
	1CK–XF11E–20–P2	CUBIERTA 7 COVER 7	1	1	1	1		UR PARA VRC1 UR FOR VRC1

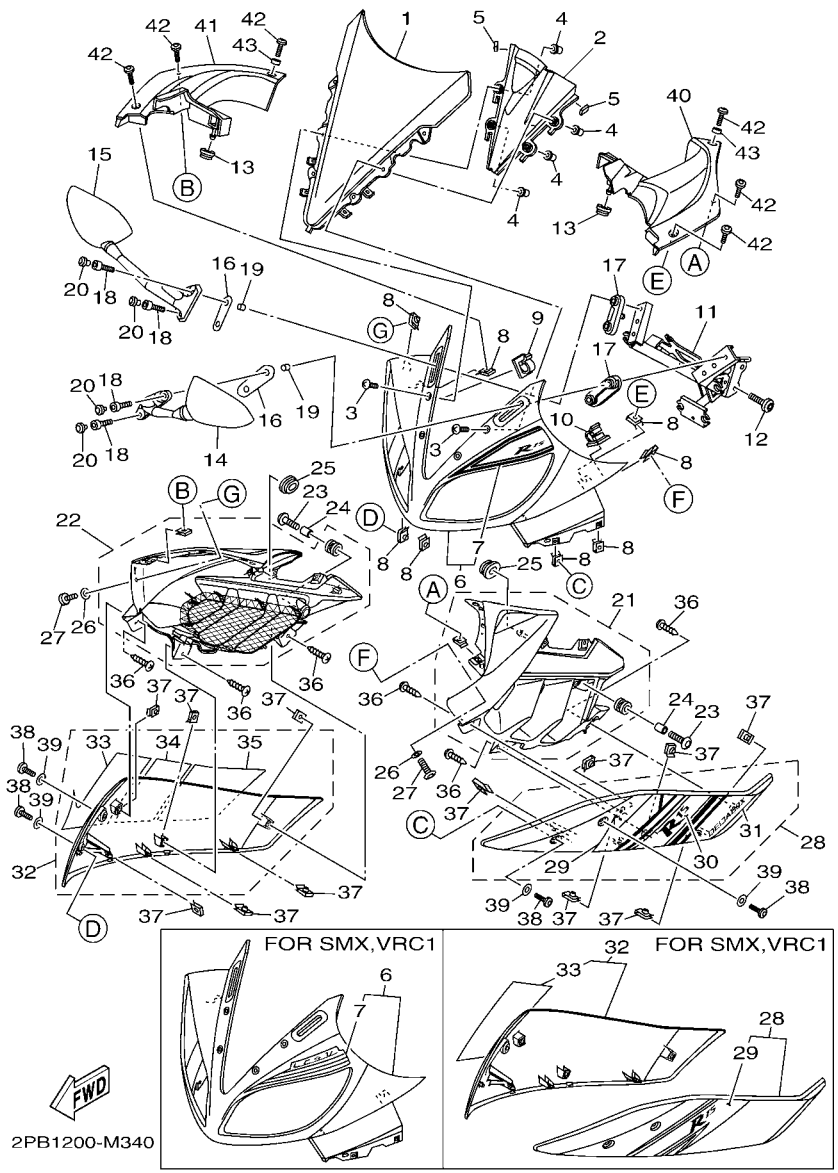

FIG. 34 PARABRISAS WINDSHIELD

REF. Nº	CODIGO Nº PART NO.	DESCRIPCION DESCRIPTION	COL	CRI	ARG	AGO		OBSERVACIONES REMARKS
22	1CK–XF11F–00–P0	CUBIERTA 8 COVER 8	1	1	1	1		UR PARA DPBMY UR FOR DPBMY
	1CK–XF11F–10–P1	CUBIERTA 8 COVER 8	1	1	1	1		UR PARA SMX UR FOR SMX
	1CK–XF11F–20–P2	CUBIERTA 8 COVER 8	1	1	1	1		UR PARA VRC1 UR FOR VRC1
23	90111–06117	TORNILLO BOLT,HEX. SOCKET BUTTON	2	2	2	2		
24	90387–068C2	ESPACIADOR COLLAR	2	2	2	2		
25	90480–01558	TAPON GROMMET	2	2	2	2		
26	90202–05180	ARANDELA DE PLANA WASHER, PLATE	2	2	2	2		
27	90111–05003	TORNILLO BOLT,HEX. SOCKET BUTTON	2	2	2	2		
28	1CK–XF836–00–P0	PANEL COMPLETO 1 PANEL COMP 1	1	1	1	1		UR PARA DPBMY UR FOR DPBMY
	1CK–XF836–10–P1	PANEL COMPLETO 1 PANEL COMP 1	1	1	1	1		UR PARA SMX UR FOR SMX
	1CK–XF836–20–P2	PANEL COMPLETO 1 PANEL COMP 1	1	1	1	1		UR PARA VRC1 UR FOR VRC1
29	1CK–F8391–00	.CALCOMANIA 1 .GRAPHIC 1	1	1	1	1		UR PARA DPBMY UR FOR DPBMY
	1CK–F839A–00	.CALCOMANIA, DE BOVEDA 7 .GRAPHIC 7	1	1	1	1		UR PARA SMX UR FOR SMX
	1CK–F839A–10	.CALCOMANIA, DE BOVEDA 7 .GRAPHIC 7	1	1	1	1		UR PARA VRC1 UR FOR VRC1
30	1CK–F8393–00	.CALCOMANIA 3 .GRAPHIC 3	1	1	1	1		PARA DPBMY FOR DPBMY
31	1CK–F8398–00	.GRAFICO 5 .GRAPHIC 5	1	1	1	1		PARA DPBMY FOR DPBMY
32	1CK–XF83G–00–P0	PANEL COMPLETO 2 PANEL COMP 2	1	1	1	1		UR PARA DPBMY UR FOR DPBMY
	1CK–XF83G–10–P1	PANEL COMPLETO 2 PANEL COMP 2	1	1	1	1		UR PARA SMX UR FOR SMX
	1CK–XF83G–20–P2	PANEL COMPLETO 2 PANEL COMP 2	1	1	1	1		UR PARA VRC1 UR FOR VRC1
33	1CK–F8392–00	.CALCOMANIA 2 .GRAPHIC 2	1	1	1	1		UR PARA DPBMY UR FOR DPBMY
	1CK–F839E–00	.CALCOMANIA .GRAPHIC 8	1	1	1	1		UR PARA SMX UR FOR SMX
	1CK–F839E–10	.CALCOMANIA .GRAPHIC 8	1	1	1	1		UR PARA VRC1 UR FOR VRC1
34	1CK–F8394–00	.CALCOMANIA 4 .GRAPHIC 4	1	1	1	1		PARA DPBMY FOR DPBMY
35	1CK–F8399–00	.CALCOMANIA 6 .GRAPHIC 6	1	1	1	1		PARA DPBMY FOR DPBMY
36	97707–50012	TORNILLO SCREW, TRUSS HEAD TAPPING	6	6	6	6		
37	90183–05818	TUERCA DE RESORTE NUT, SPRING	12	12	12	12		
38	90111–05003	TORNILLO BOLT,HEX. SOCKET BUTTON	4	4	4	4		

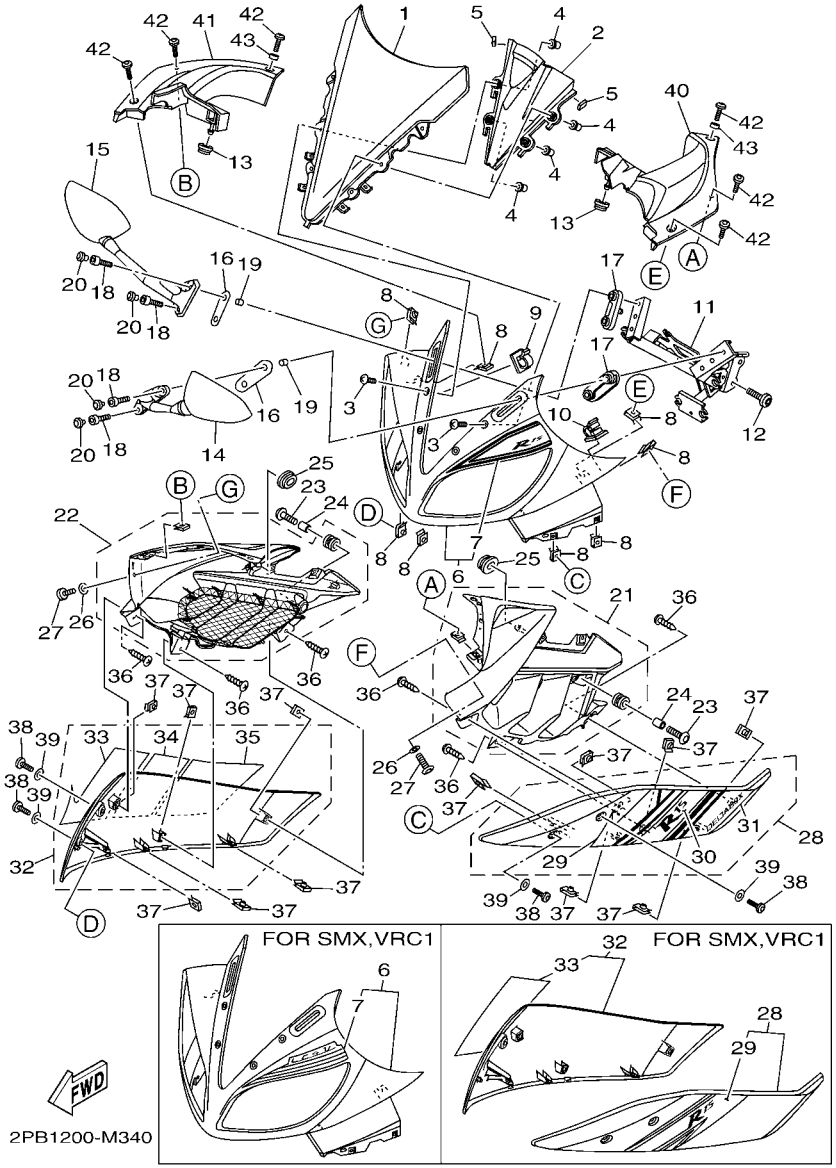

FIG. 34 PARABRISAS WINDSHIELD

REF. Nº	CODIGO Nº PART NO.	DESCRIPCION DESCRIPTION	COL	CRI	ARG	AGO		OBSERVACIONES REMARKS
39	90202–05180	ARANDELA DE PLANA WASHER, PLATE	4	4	4	4		
40	20P–F837L–00	PANEL DE CONSOLA PANEL, CONSOLE 1	1	1	1	1		
41	20P–F837M–00	PANEL, DE CONSOLA 2 PANEL, CONSOLE 2	1	1	1	1		
42	90111–05002	TORNILLO BOLT,HEX. SOCKET BUTTON	6	6	6	6		
43	90387–068C4	ESPACIADOR COLLAR	2	2	2	2		

FIG. 35 GENERADOR GENERATOR

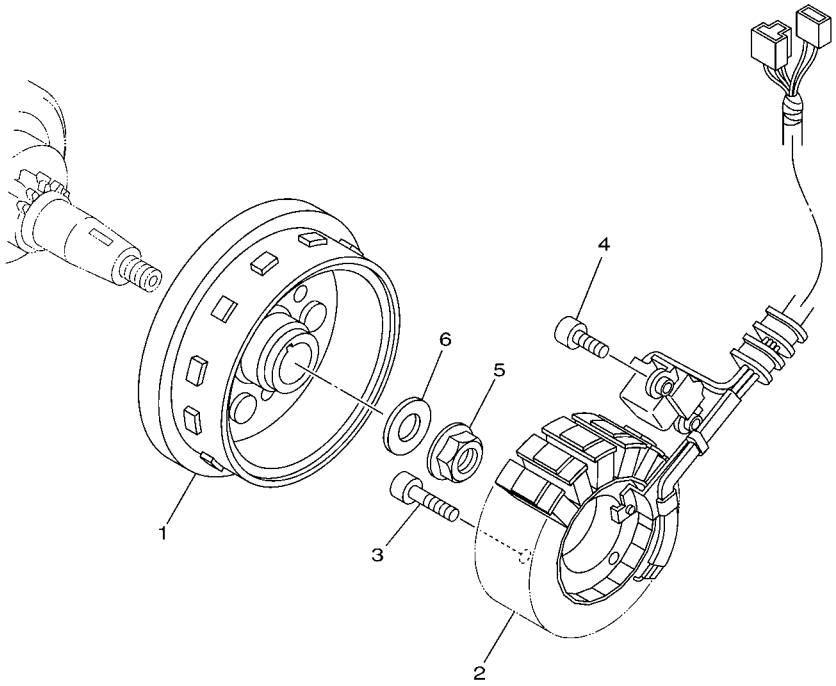

3C11460-F320

REF. Nº	CODIGO Nº PART NO.	DESCRIPCION DESCRIPTION	COL	CRI	ARG	AGO		OBSERVACIONES REMARKS
1	3C1–H1450–10	ROTOR COMPLETO ROTOR ASSY	1	1	1	1		
2	3C1–H1410–11	ESTATOR COMPLETO STATOR ASSY	1	1	1	1		
3	91317–06025	PERNO BOLT	3	3	3	3		
4	91317–06016	PERNO BOLT	2	2	2	2		
5	95707–12500	TUERCA DE BRIDA NUT, FLANGE	1	1	1	1		
6	90201–12019	ARANDELA PLANA WASHER, PLATE	1	1	1	1		

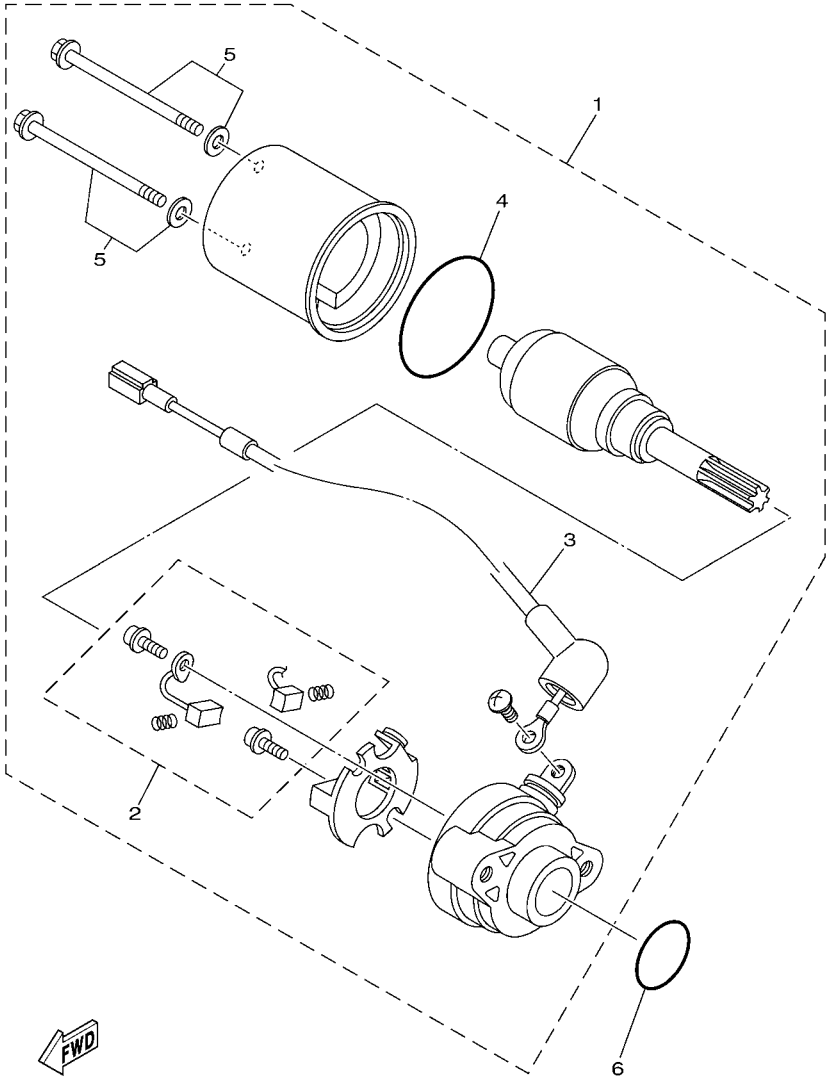

FIG. 36 MOTOR DE ARRANQUE STARTING MOTOR

REF. Nº	CODIGO Nº PART NO.	DESCRIPCION DESCRIPTION	COL	CRI	ARG	AGO		OBSERVACIONES REMARKS
1	38B–H1800–01	MOTOR DE ARRANQUE COMPLETO STARTING MOTOR ASSY	1	1	1	1		
2	3AY–H1801–00	.JUEGO DE ESCOBILLA .BRUSH SET	1	1	1	1		
3	5D7–8183G–00	.CABLE DEL MOTOR COMPL. .CORD COMP.	1	1	1	1		
4	1S7–H1861–00	.EMPAQUETADURA .GASKET	1	1	1	1		
5	3AY–H1828–00	.TORNILLO DE EMPUJE 2 .SCREW 2	2	2	2	2		
6	93210–26810	ANILLO O O-RING	1	1	1	1		

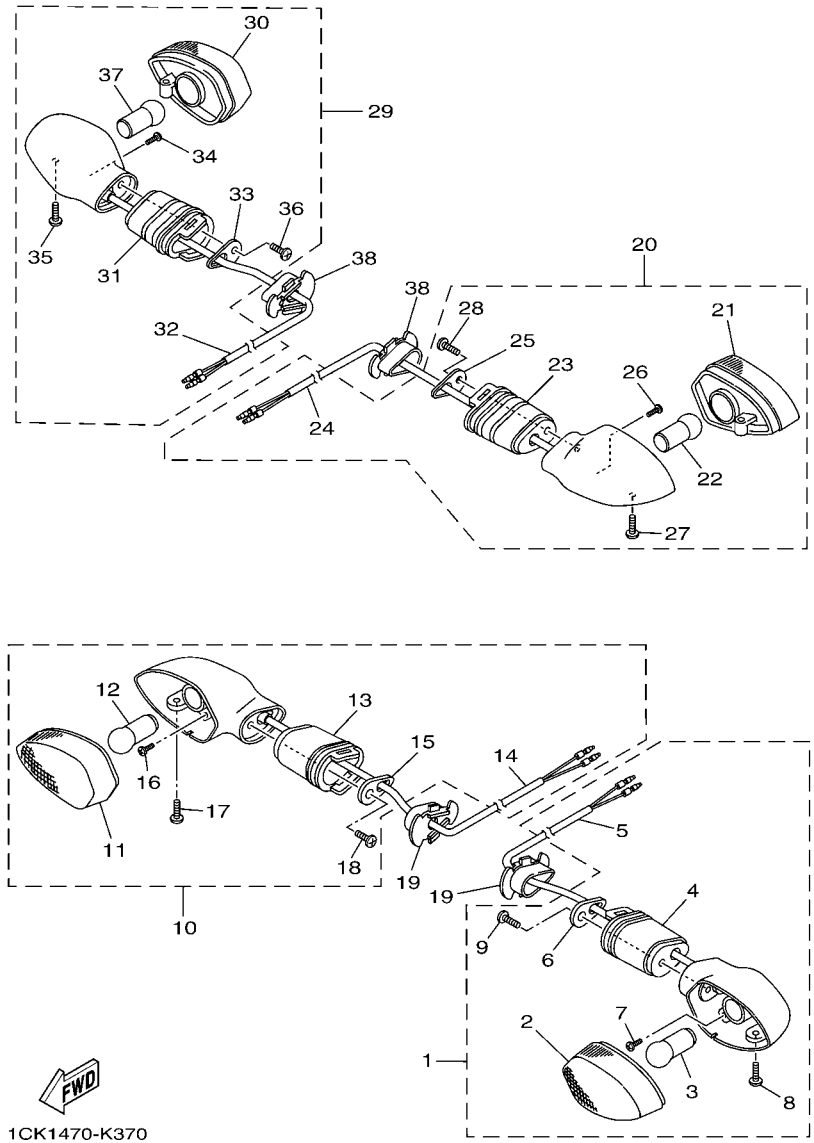

FIG. 37 LUZ DE DESTELLADOR FLASHER LIGHT

REF. Nº	CODIGO Nº PART NO.	DESCRIPCION DESCRIPTION	COL	CRI	ARG	AGO		OBSERVACIONES REMARKS
1	1CK–H3310–00	DESTELLADOR DE LUZ DELANT. FRONT FLASHER LIGHT ASSY 1	1	1	1	1		
2	54B–H331A–00	.LENTES COMPLETO 1 .LENS COMP 1	1	1	1	1		
3	20P–H3311–10	.BOMBILLA (12V-10W) .BULB, FLASHER (12V-10W)	1	1	1	1		
4	20P–H3318–00	.SOPORTE DE DESTELLADOR 1 .STAY, FLASHER 1	1	1	1	1		
5	1CK–H331E–00	.CORDON COMPLETO .CORD ASSY	1	1	1	1		
6	20P–H3618–00	.PLACA .PLATE	1	1	1	1		
7	20P–H213A–00	.TORNILLO ACCESORIO .SCREW, FITTING	1	1	1	1		
8	20P–H3333–00	.TORNILLO ACCESORIO DE LENTE .SCREW, LENS FITTING	1	1	1	1		
9	20P–H2133–00	.TORNILLO ACCESORIO .SCREW, FITTING	1	1	1	1		
10	1CK–H3320–00	DESTELLADOR DE LUZ DELANT. FRONT FLASHER LIGHT ASSY 2	1	1	1	1		
11	54B–H332A–00	.LENTES COMPLETO 2 .LENS COMP 2	1	1	1	1		
12	20P–H3311–10	.BOMBILLA (12V-10W) .BULB, FLASHER (12V-10W)	1	1	1	1		
13	20P–H3318–00	.SOPORTE DE DESTELLADOR 1 .STAY, FLASHER 1	1	1	1	1		
14	1CK–H332E–00	.CABLE COMPL. .CORD ASSY	1	1	1	1		
15	20P–H3618–00	.PLACA .PLATE	1	1	1	1		
16	20P–H213A–00	.TORNILLO ACCESORIO .SCREW, FITTING	1	1	1	1		
17	20P–H3333–00	.TORNILLO ACCESORIO DE LENTE .SCREW, LENS FITTING	1	1	1	1		
18	20P–H2133–00	.TORNILLO ACCESORIO .SCREW, FITTING	1	1	1	1		
19	5YY–H3318–10	SOPORTE DE DESTELLADOR 1 STAY, FLASHER 1	2	2	2	2		
20	1CK–H3330–00	DESTELLADOR DE LUZ TRAS.COMPL. REAR FLASHER LIGHT ASSY 1	1	1	1	1		
21	54B–H334A–00	.LENTES COMPLETO 2 .LENS COMP 2	1	1	1	1		
22	20P–H3311–10	.BOMBILLA (12V-10W) .BULB, FLASHER (12V-10W)	1	1	1	1		
23	20P–H3318–10	.SOPORTE DE DESTELLADOR 1 .STAY, FLASHER 1	1	1	1	1		
24	1CK–H333E–00	.CABLE COMPLETA .CORD ASS'Y	1	1	1	1		
25	20P–H3618–00	.PLACA .PLATE	1	1	1	1		
26	20P–H213A–00	.TORNILLO ACCESORIO .SCREW, FITTING	1	1	1	1		
27	20P–H3333–00	.TORNILLO ACCESORIO DE LENTE .SCREW, LENS FITTING	1	1	1	1		

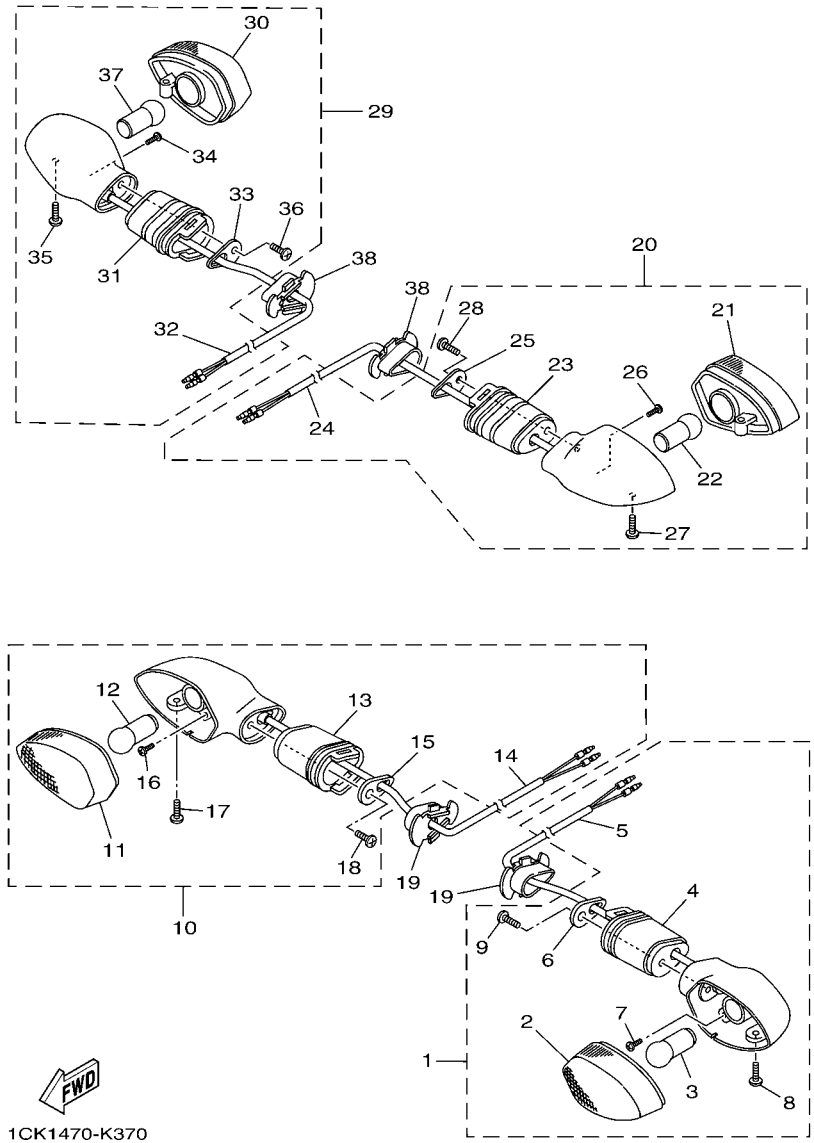

FIG. 37 LUZ DE DESTELLADOR FLASHER LIGHT

REF. Nº	CODIGO Nº PART NO.	DESCRIPCION DESCRIPTION	COL	CRI	ARG	AGO		OBSERVACIONES REMARKS
28	20P–H2133–00	.TORNILLO ACCESORIO .SCREW, FITTING	1	1	1	1		
29	1CK–H3340–00	DESTELLADOR DE LUZ TRAS.COMPL. REAR FLASHER LIGHT ASSY 2	1	1	1	1		
30	54B–H333A–00	.LENTES COMPLETO 1 .LENS COMP 1	1	1	1	1		
31	20P–H3318–10	.SOPORTE DE DESTELLADOR 1 .STAY, FLASHER 1	1	1	1	1		
32	1CK–H334E–00	.CABLE COMPLETA .CORD ASS'Y	1	1	1	1		
33	20P–H3618–00	.PLACA .PLATE	1	1	1	1		
34	20P–H213A–00	.TORNILLO ACCESORIO .SCREW, FITTING	1	1	1	1		
35	20P–H3333–00	.TORNILLO ACCESORIO DE LENTE .SCREW, LENS FITTING	1	1	1	1		
36	20P–H2133–00	.TORNILLO ACCESORIO .SCREW, FITTING	1	1	1	1		
37	20P–H3311–10	.BOMBILLA (12V-10W) .BULB, FLASHER (12V-10W)	1	1	1	1		
38	5YY–H3318–10	SOPORTE DE DESTELLADOR 1 STAY, FLASHER 1	2	2	2	2		

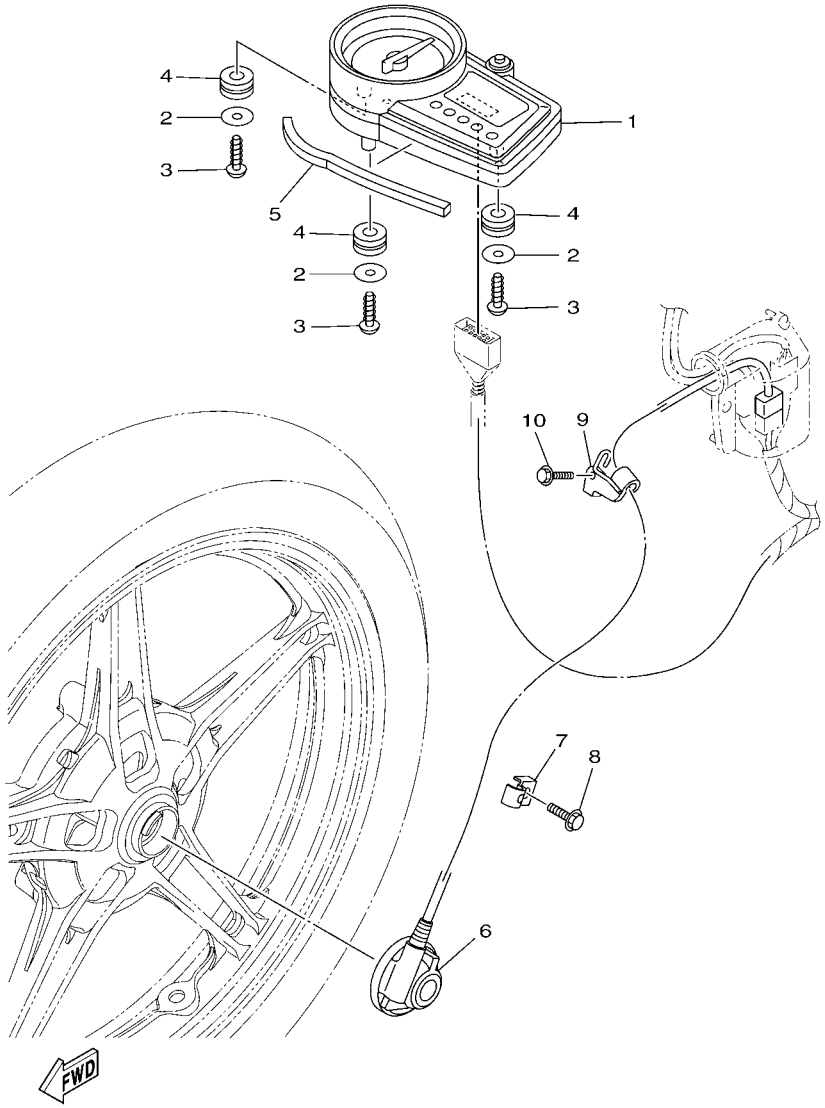

FIG. 38 MEDIDOR METER

REF. Nº	CODIGO Nº PART NO.	DESCRIPCION DESCRIPTION	COL	CRI	ARG	AGO		OBSERVACIONES REMARKS
1	1CK–H3500–00	METRO COMPLETO METER ASSY	1	1	1	1		
2	90201–05036	ARANDELA PLANA WASHER, PLATE	3	3	3	3		
3	97707–50016	TORNILLO SCREW, TRUSS HEAD TAPPING	3	3	3	3		
4	90480–14816	TAPON GROMMET	3	3	3	3		
5	20P–H3592–00	AMORTIGUADOR DAMPER	1	1	1	1		
6	1CK–H3755–01	SENSOR DE VELOCIDAD SENSOR, SPEED	1	1	1	1		
7	1CK–H3595–00	GRAMPA CLAMP	1	1	1	1		
8	95027–06012	PERNO, DE BRIDA BOLT, FLANGE	1	1	1	1		
9	1CK–H3596–00	GRAMPA CLAMP	1	1	1	1		
10	95027–06014	PERNO, DE BRIDA BOLT, FLANGE	1	1	1	1		

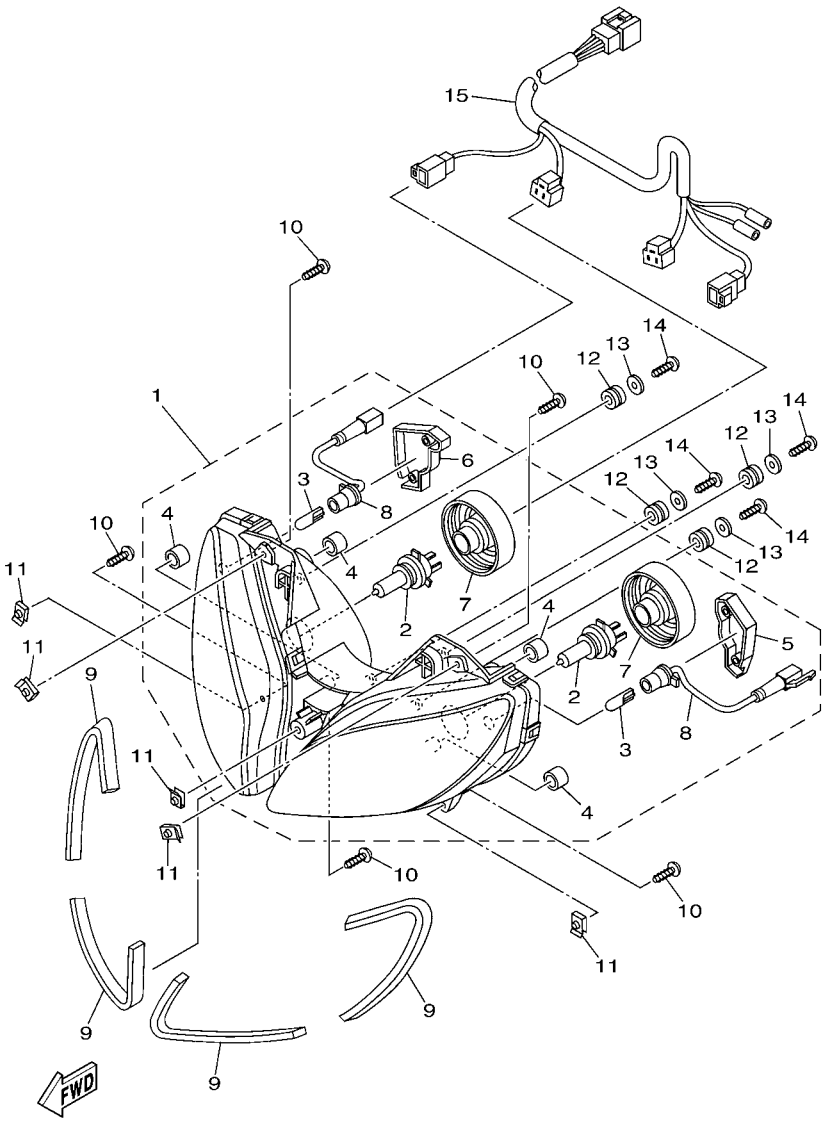

1CK1470-K390

FIG. 39 FARO DELANTERO HEADLIGHT

REF. Nº	CODIGO Nº PART NO.	DESCRIPCION DESCRIPTION	COL	CRI	ARG	AGO		OBSERVACIONES REMARKS
1	54C–H4300–01	FARO DELANTERO COMPLETO HEADLIGHT ASSY	1	1	1	1		
2	20P–H4314–00	.AMPOLLETA (12V-35/35W) .BULB (12V-35/35W)	2	2	2	2		
3	20P–H4347–10	.AMPOLLETA (12V-5W) .BULB (12V-5W)	2	2	2	2		
4	20P–H4378–00	.TAPA .CAP	4	4	4	4		
5	20P–H4544–11	.CUBIERTA .COVER	1	1	1	1		
6	20P–H4544–01	.CUBIERTA .COVER	1	1	1	1		
7	20P–H4397–00	.CUBIERTA DE ENCASTRE .COVER, SOCKET	2	2	2	2		
8	20P–H4312–01	.CABLE COMPLETA .CORD ASSY	2	2	2	2		
9	20P–H4345–00	AMORT DE FARO DELANTERO DAMPER, HEADLIGHT	4	4	4	4		
10	97707–50016	TORNILLO SCREW, TRUSS HEAD TAPPING	5	5	5	5		
11	90183–05818	TUERCA DE RESORTE NUT, SPRING	5	5	5	5		
12	90480–14229	TAPON GROMMET	4	4	4	4		
13	90201–05036	ARANDELA PLANA WASHER, PLATE	4	4	4	4		
14	97707–50016	TORNILLO SCREW, TRUSS HEAD TAPPING	4	4	4	4		
15	2PB–H4359–00	CABLE DE FARO DELANTERO CORD, HEADLIGHT	1	1	1	1		

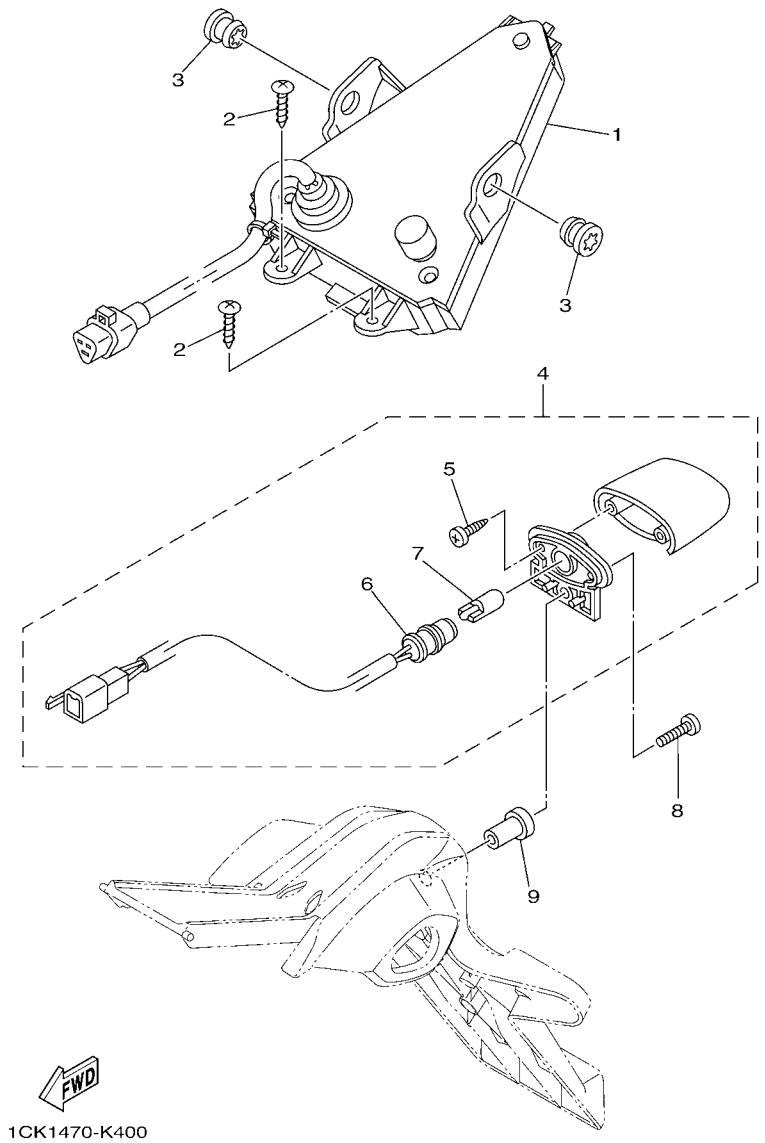

FIG. 40 LUZ DE COLA TAILLIGHT

REF. Nº	CODIGO Nº PART NO.	DESCRIPCION DESCRIPTION	COL	CRI	ARG	AGO		OBSERVACIONES REMARKS
1	1CK–H4710–00	UNIDAD FARO TRASERO COMPL. TAILLIGHT UNIT ASSY	1	1	1	1		
2	97707–50014	TORNILLO SCREW, TRUSS HEAD TAPPING	2	2	2	2		
3	90480–13818	TAPON GROMMET	2	2	2	2		
4	1CK–H4740–00	LUZ DE LICENCIA COMPLETA LICENCE LIGHT ASSY	1	1	1	1		
5	1CK–H4726–00	.TORNILLO .SCREW	2	2	2	2		
6	1CK–H4547–00	.CABLE DE LUZ DE LICENCIA .CORD, LICENCE LIGHT	1	1	1	1		
7	1CK–H4744–00	.BOMBILLA (12V-5W) .BULB (12V-5W)	1	1	1	1		
8	98907–04020	TORNILLO DE LIGAR SCREW, BIND	1	1	1	1		
9	90179–04003	TUERCA NUT	1	1	1	1		

FIG. 41 INTERRUPTOR DE MANILLAR&PALANC HANDLE SWITCH & LEVER

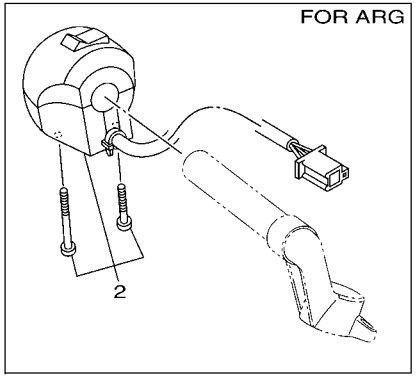

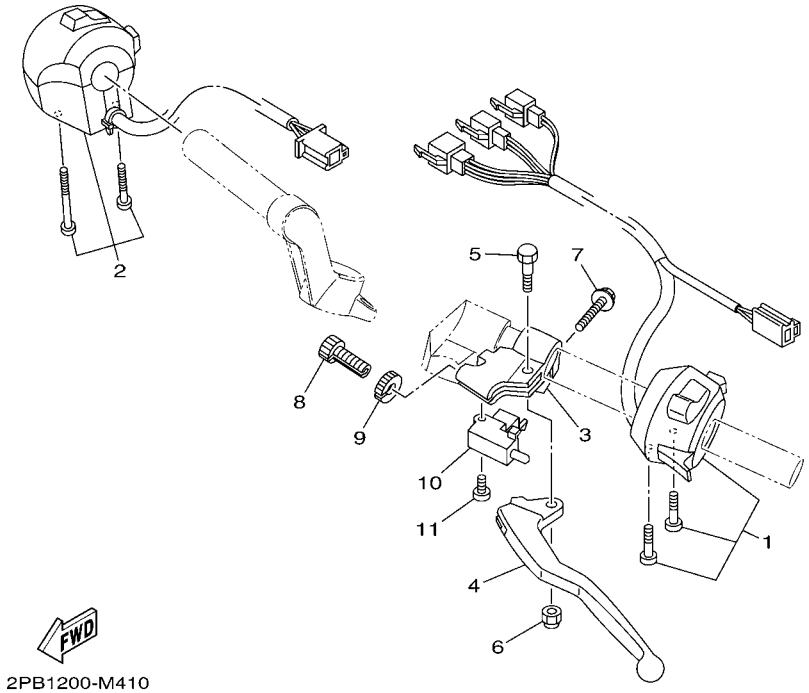

2PB1200-M410

REF. Nº	CODIGO Nº PART NO.	DESCRIPCION DESCRIPTION	COL	CRI	ARG	AGO		OBSERVACIONES REMARKS
1	20P–H3972–01	INTERRUPTOR DE MANIJA 4 SWITCH, HANDLE 4	1	1	1	1		
2	1CK–H3963–00	INTERRUPTOR DE MANIJA 3 SWITCH, HANDLE 3	1	1		1		
	2PB–H3975–00	INTERRUPTOR DE MANIJA 2 SWITCH, HANDLE 2			1			
3	20P–H2911–00	SOPORTE DE LEVA 1 HOLDER, LEVER 1	1	1	1	1		
4	20P–H3912–00	PALANCA 1 LEVER 1	1	1	1	1		
5	20P–H3945–00	PERNO DE PALANCA BOLT, LEVER	1	1	1	1		
6	20P–H331B–00	TUERCA DE RESORTE NUT, SPRING	1	1	1	1		
7	20P–H3546–00	PERNO BOLT	1	1	1	1		
8	20P–H3951–00	PERNO DE CABLE DE AJUSTE BOLT, CABLE ADJUSTING	1	1	1	1		
9	20P–H3927–00	TUERCA DE AJUSTE NUT, ADJUSTING	1	1	1	1		
10	3YX–82917–01	INTERRUPTOR SWITCH	1	1	1	1		
11	98707–03020	TORNILLO DE CABEZA PLANA SCREW, FLAT HEAD	1	1	1	1		

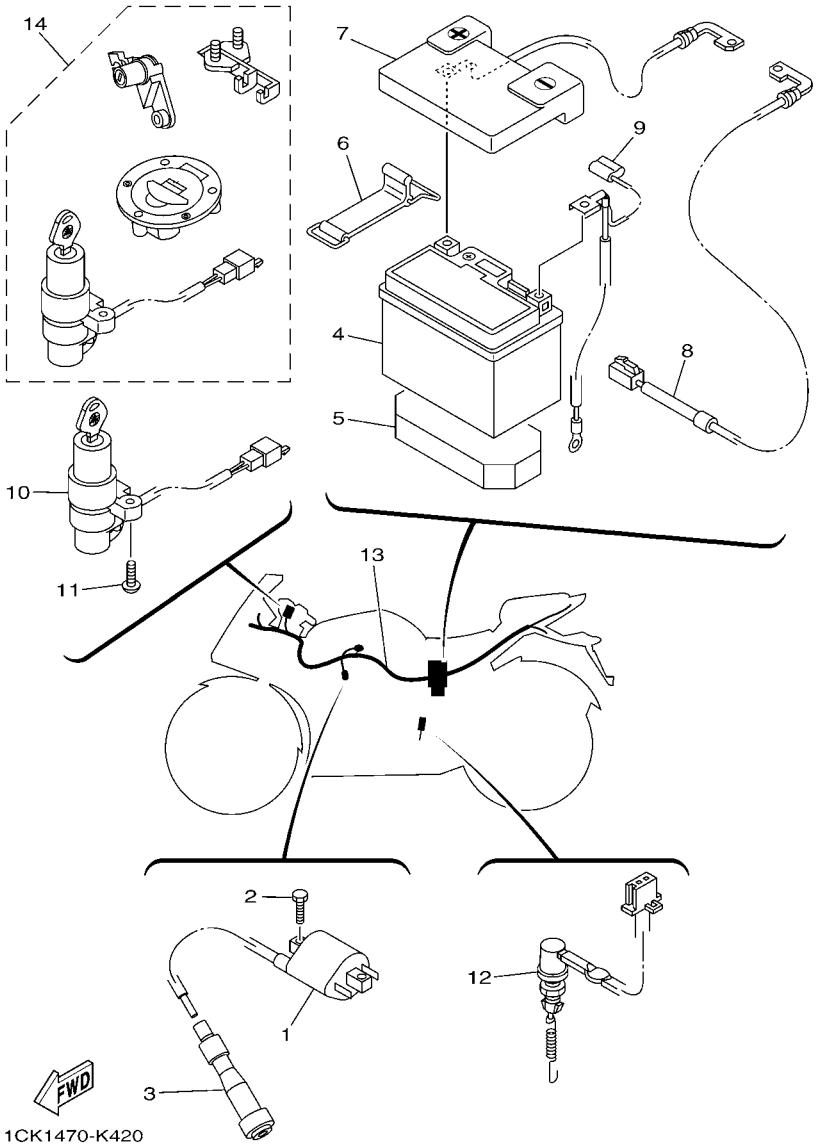

FIG. 42 EQUIPO ELECTRICO 1 ELECTRICAL 1

REF. Nº	CODIGO Nº PART NO.	DESCRIPCION DESCRIPTION	COL	CRI	ARG	AGO		OBSERVACIONES REMARKS
1	1P5–H2310–00	BOBINA DE ENCENDIDO COMPLETA IGNITION COIL ASSY	1	1	1	1		
2	97007–06016	PERNO BOLT	2	2	2	2		
3	20P–H2370–01	TAPON DE BUJIA COMPLT PLUG CAP ASSY	1	1	1	1		
4	20P–H2100–00	BATERIA COMPLETA(GS YTZ5S MF) BATTERY ASSY (GS YTZ 5S MF)	1	1	1	1		
5	1CK–H2121–00	BASE DE BATERIA PAD, BATTERY	1	1	1	1		
6	20P–F811G–00	CINTA BAND	1	1	1	1		
7	1CK–H2115–00	CABLE CONDUCTOR POSITIVO WIRE, PLUS LEAD	1	1	1	1		
8	1CK–H2509–00	CABLE SUBCONDUCTOR WIRE, SUB LEAD	1	1	1	1		
9	1CK–H2116–00	CABLE CONDUCTOR NEGATIVO WIRE, MINUS LEAD	1	1	1	1		
10	54C–H2501–00	LLAVE DE IGNICION COMPLT MAIN SWITCH STEERING LOCK	1	1	1	1		
11	90149–06843	TORNILLO DE REGLAJE SCREW	2	2	2	2		
12	1CK–H2530–00	INTERRUPTOR DE PARADA COMPLETO STOP SWITCH ASSY	1	1	1	1		
13	1CK–H2590–00	CONJUNTO DE CABLES WIRE HARNESS ASSY	1	1	1	1		
14	20P–XH250–10	LLAVE DE IGNICION COMPLT MAIN SW. STRG. LOCK SUB ASSY	1	1	1	1		AP AP

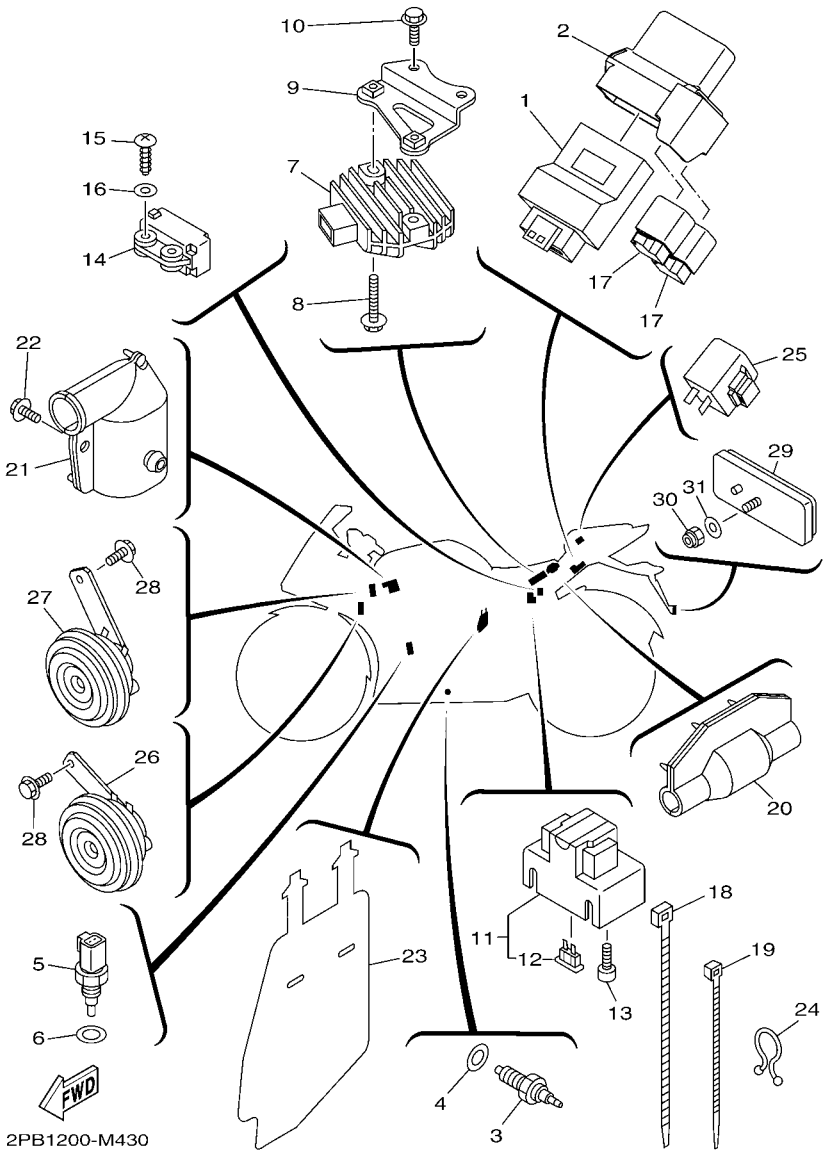

FIG. 43 EQUIPO ELECTRICO 2 ELECTRICAL 2

REF. Nº	CODIGO Nº PART NO.	DESCRIPCION DESCRIPTION	COL	CRI	ARG	AGO		OBSERVACIONES REMARKS
1	1CK–H591A–00	UNIDAD CONTROL ENGINE CONTROL UNIT ASSY	1	1	1	1		
2	1CK–H5546–00	BANDA BAND	1	1	1	1		
3	21C–H2540–00	INTERRUPTOR NEUTRAL COMPL NEUTRAL SWITCH ASSY	1	1	1	1		
4	90430–10148	JUNTA GASKET	1	1	1	1		
5	38B–H5790–00	TERMICA SENSORIO THERMOSENSOR ASSY	1	1	1	1		
6	90430–12801	JUNTA GASKET	1	1	1	1		
7	2S5–H1960–00	RECTIFICADOR Y REGULADOR RECTIFIER & REGULATOR ASSY	1	1	1	1		
8	95807–06020	TORNILLO BOLT, FLANGE	2	2	2	2		
9	1CK–H1975–00	PLACA ACCESORIA RECTIF. PLATE, RECTIFIER FITTING	1	1	1	1		
10	95827–06010	TORNILLO BOLT, FLANGE	2	2	2	2		
11	1CK–H1940–00	CONJUNTO ARRANCADOR RELEVO STARTER RELAY ASSY	1	1	1	1		
12	20P–H2151–00	.FUSIBLE (20A) .FUSE (20A)	1	1	1	1		
13	91317–05008	PERNO BOLT	2	2	2	2		
14	10B–82576–00	SENSOR ANGULO DE INCLINATION SENSOR, LEAN ANGLE	1	1	1	1		
15	97707–40012	TORNILLO ROSCA HEMBRA SCREW, TAPPING	2	2	2	2		
16	90201–047A2	ARANDELA PLANA WASHER, PLATE	2	2	2	2		
17	1CK–H1950–00	RELE COMPLETO RELAY ASSY	2	2	2	2		
18	90464–50800	BRIDA CLAMP	4	4	4	4		
19	90464–36800	BRIDA CLAMP	8	8	8	8		
20	1CK–H2599–00	CUBIERTA DE CONECTOR COVER, CONNECTER	1	1	1	1		
21	20P–H246B–00	CUBIERTA 1 COVER 1	1	1	1	1		
22	90119–06054	TORNILLO CON ARANDELA BOLT, WITH WASHER	1	1	1	1		
23	1CK–H2589–00	PROTECTOR DE ARNES DE CABLE PROTECTER, WIRE HARNESS	1	1	1	1		
24	341–82594–00	GRAMPA CLAMP	2	2	2	2		
25	5TS–H3350–01	RELE DE DESTELLADOR COMPL. FLASHER RELAY ASSY	1	1	1	1		
26	1CK–H3371–10	BOCINA HORN	1	1	1	1		
27	1CK–H3371–00	BOCINA HORN	1	1	1	1		

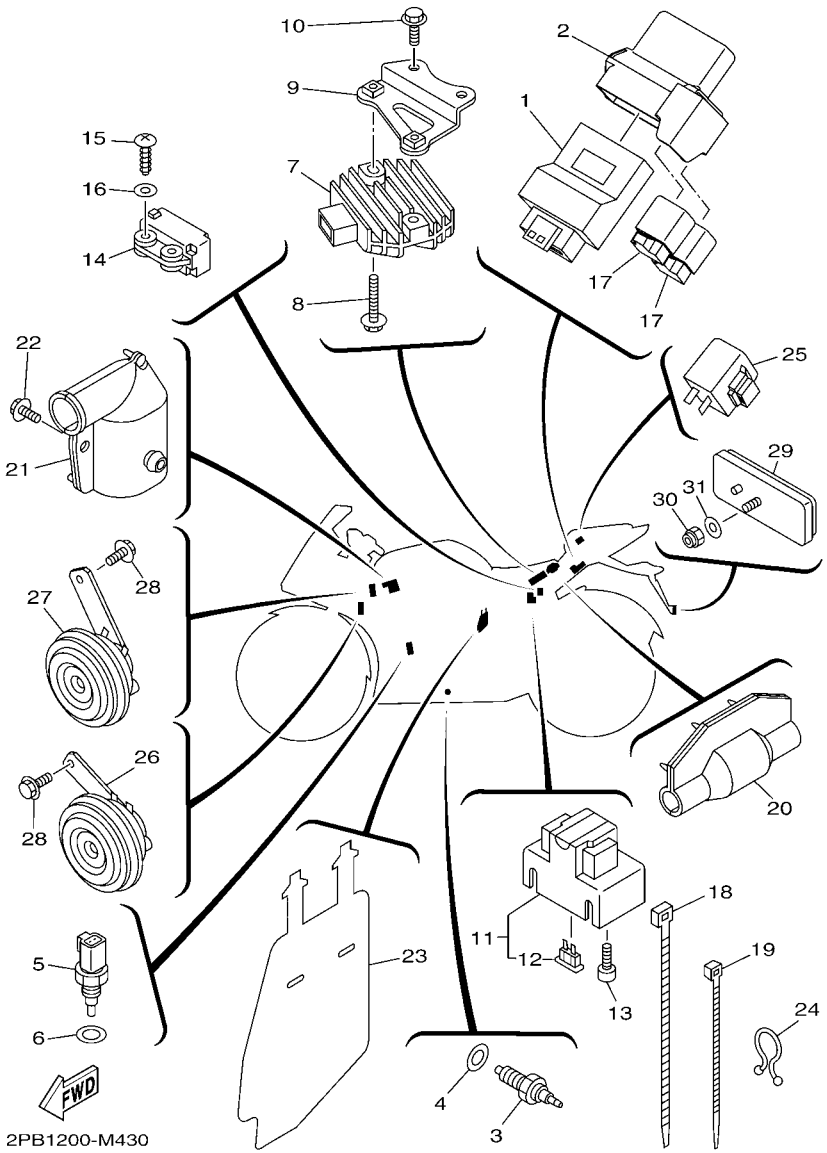

FIG. 43 EQUIPO ELECTRICO 2 ELECTRICAL 2

REF. Nº	CODIGO Nº PART NO.	DESCRIPCION DESCRIPTION	COL	CRI	ARG	AGO		OBSERVACIONES REMARKS
28	95827–06012	TORNILLO BOLT, FLANGE	2	2	2	2		
29	5US–H5110–00	REFLECTOR COMPLETO REFLECTOR ASSY	1	1	1	1		
30	95607–05100	TUERCA AUTOBLOCANTE NUT, U	1	1	1	1		
31	90201–05725	ARANDELA PLANA WASHER, PLATE	1	1	1	1		

INDICE NUMERICO
NUMERICAL INDEX

CODIGO Nº PART NO.	REF. Nº
3C1–11603–00	2 – 7
5YP–12117–00	3 – 6
1WG–12118–00	3 – 5
3C1–12159–01	3 – 9
	3 – 12
3C1–13770–10	8 – 9
3C1–13971–00	8 – 11
5JW–14104–00	8 – 14
2S5–1410H–00	8 – 15
5CA–14147–00	8 – 10
1S4–14216–00	8 – 16
5YP–1482K–00	1 – 8
183–23411–00	21 – 2
183–23412–00	21 – 3
5TL–2341E–00	21 – 4
5MT–25398–00	25 – 7
	27 – 15
5MT–25398–10	25 – 7
	27 – 15
5MT–25398–20	25 – 7
	27 – 15
1CK–25873–00	32 – 22
36Y–2589H–00	30 – 6
5D7–8183G–00	36 – 3
10B–82576–00	43 – 14
341–82594–00	43 – 24
3YX–82917–01	41 – 10
437–83936–11	30 – 20
4AG–85111–00	18 – 7
	18 – 10
38B–E1102–00	1 – 1
38B–E111F–00	4 – 8
1S7–E1133–10	1 – 2
20P–E1166–00	8 – 34
1CK–E1181–00	1 – 19
38B–E1185–00	5 – 4
38B–E1191–00	1 – 6
38B–E1193–00	1 – 14
38B–E1196–00	5 – 5
3C1–E1311–00	1 – 23
38B–E1351–00	1 – 24
1CK–E1400–09	2 – 1
38B–E1454–00	2 – 14
54B–E1476–00	2 – 12
21C–E1496–20	2 – 9
21C–E1531–00	2 – 15
38B–E1536–10	2 – 8
3C1–E1631–11	2 – 4

CODIGO Nº PART NO.	REF. Nº
38B–E1633–00	2 – 5
38B–E1951–00	5 – 8
38B–E1952–00	5 – 9
5YP–E2111–00	3 – 1
38B–E2113–00	3 – 4
38B–E2119–00	3 – 3
5YP–E2121–00	3 – 2
38B–E2126–00	3 – 7
38B–E2151–00	3 – 8
5YP–E2156–00	3 – 14
5YP–E2157–00	4 – 7
38B–E2161–00	3 – 11
38B–E2170–00	4 – 1
38B–E2210–00	4 – 16
1CK–E2213–00	4 – 17
38B–E2231–00	4 – 11
38B–E2241–00	4 – 12
38B–E2256–00	4 – 15
38B–E2280–10	4 – 5
5YP–E2288–00	4 – 6
5YP–E2405–00	6 – 5
38B–E240A–00	6 – 4
1CK–E2411–00	6 – 1
38B–E2413–00	6 – 2
38B–E2422–00	5 – 1
38B–E2428–00	5 – 3
38B–E2443–00	5 – 13
38B–E2450–00	5 – 7
20P–E2467–01	6 – 15
1CK–E246A–00	6 – 14
20P–E2481–00	6 – 16
20P–E2482–00	6 – 18
5ST–E2590–00	6 – 8
5YP–E2671–00	6 – 7
5YP–E2675–00	6 – 6
38B–E3300–00	7 – 1
38B–E3324–00	7 – 8
38B–E3327–00	7 – 13
21C–E3362–00	2 – 13
38B–E3411–00	7 – 4
38B–E3440–00	7 – 7
38B–E3447–00	7 – 9
38B–E3542–00	8 – 3
38B–E3556–00	8 – 2
38B–E3575–00	8 – 17
38B–E3585–00	8 – 1
38B–E3586–00	8 – 6
1CK–E3750–00	8 – 13

CODIGO Nº PART NO.	REF. Nº
3C1–E3907–10	23 – 18
20P–E4411–00	8 – 18
20P–E4412–00	8 – 19
20P–E4419–00	8 – 28
20P–E441J–00	8 – 29
20P–E443E–00	8 – 24
20P–E4450–00	8 – 20
3C1–E4452–00	8 – 22
20P–E4453–00	8 – 21
20P–E4485–00	8 – 26
21C–E4613–00	9 – 14
1CK–E4703–00	9 – 1
1CK–E4718–00	9 – 2
1CK–E4728–00	9 – 3
20P–E4747–00	31 – 51
1CK–E4799–00	9 – 8
1S7–E4840–00	1 – 9
20P–E4877–00	8 – 40
20P–E4881–00	8 – 43
20P–E4882–00	8 – 36
20P–E4883–00	8 – 45
1S7–E4890–00	1 – 10
38B–E5150–00	10 – 1
38B–E5351–00	7 – 3
38B–E5362–00	11 – 16
38B–E5411–00	11 – 1
38B–E5418–00	11 – 9
1CK–E5421–00	11 – 11
38B–E5441–00	4 – 18
1CK–E5451–00	11 – 2
1CK–E5461–00	11 – 12
1CK–E5514–00	12 – 1
38B–E5521–00	12 – 2
38B–E5524–10	12 – 5
54B–E5580–00	12 – 8
38B–E5598–00	4 – 14
38B–E6111–00	13 – 1
21C–E6135–10	13 – 18
54B–E6144–00	13 – 16
1CK–E6150–00	13 – 5
21C–E6154–00	13 – 6
38B–E6193–00	13 – 2
54B–E6321–00	13 – 8
21C–E6324–00	13 – 10
21C–E6331–00	13 – 9
21C–E6333–00	13 – 12
21C–E6337–00	13 – 13
3C1–E6344–00	13 – 17

CODIGO Nº PART NO.	REF. Nº
1CK–E6345–00	13 – 21
54B–E6351–00	13 – 11
21C–E6356–01	13 – 15
38B–E6357–01	13 – 22
21C–E6358–00	13 – 14
21C–E6371–00	13 – 7
38B–E6380–01	13 – 20
38B–E7121–00	14 – 7
38B–E7131–00	14 – 5
38B–E7151–00	14 – 2
38B–E7161–00	14 – 6
38B–E7211–00	14 – 13
38B–E7221–00	14 – 21
38B–E7231–00	14 – 19
38B–E7241–00	14 – 18
38B–E7251–00	14 – 15
38B–E7258–00	14 – 14
38B–E7261–00	14 – 20
1CK–E7402–00	14 – 12
38B–E7411–01	14 – 1
4LS–E7456–00	14 – 28
38B–E7471–00	14 – 10
38B–E8101–00	16 – 4
20P–E8111–01	16 – 9
20P–E8112–01	16 – 14
20P–E8113–00	16 – 10
	31 – 32
20P–E8115–00	16 – 11
21C–E8140–00	16 – 1
38B–E8337–00	16 – 3
38B–E8511–00	15 – 2
38B–E8512–00	15 – 3
38B–E8513–00	15 – 4
38B–E8531–00	15 – 5
1CK–E8540–00	15 – 1
1CK–F1110–00	17 – 1
54C–F113J–00	18 – 8
54C–F113K–00	18 – 11
1CK–F117G–00	17 – 9
1CK–F117K–00	24 – 11
20P–F1338–00	17 – 8
1CK–F144G–00	31 – 35
1CK–F1511–00–P0	18 – 1
1CK–F1511–00–P1	18 – 1
1CK–F1511–00–P2	18 – 1
1CK–F160E–00	18 – 20
1CK–F1611–00	18 – 13
1CK–F1629–00	18 – 16

CODIGO Nº PART NO.	REF. Nº
1CK–F1640–00	18 – 15
2PB–F1650–00	20 – 21
1CK–F1711–00	19 – 1
1CK–F171X–00–P0	19 – 26
1CK–F171X–00–P1	19 – 26
1CK–F171X–00–P2	19 – 26
1CK–F1721–00	19 – 2
1CK–F173E–00	19 – 17
1CK–F173E–10	19 – 17
1CK–F173F–00	19 – 19
1CK–F173F–10	19 – 19
20P–F1749–00	33 – 8
1CK–F174G–00	19 – 17
	19 – 19
20P–F1773–00	33 – 15
20P–F1823–00	19 – 15
20P–F1828–00	19 – 11
20P–F1871–00	19 – 8
20P–F1875–00	19 – 10
1CK–F2110–00	20 – 1
1CK–F2128–00	20 – 4
20P–F2141–00	20 – 5
1CK–F2147–00	20 – 24
1CK–F2151–00	20 – 7
1CK–F217A–00	20 – 10
1CK–F217F–00	20 – 14
20P–F2184–00	20 – 3
1CK–F219X–00	20 – 20
1CK–F2210–00	20 – 27
1CK–F2311–00	20 – 17
20P–F2327–00	17 – 7
1CK–F3100–00	22 – 1
1CK–F3102–00	22 – 2
1CK–F3103–00	22 – 21
20P–F3110–00	22 – 8
	22 – 27
20P–F3111–00	22 – 18
	22 – 37
20P–F3114–00	22 – 19
	22 – 38
20P–F3118–00	22 – 17
	22 – 36
20P–F3125–00	22 – 4
	22 – 23
1CK–F3126–00	22 – 3
1CK–F3136–00	22 – 22
20P–F3141–00	22 – 15
	22 – 34

CODIGO Nº PART NO.	REF. Nº
20P–F3144–00	22 – 7
	22 – 26
20P–F3145–00	22 – 5
	22 – 24
20P–F3149–00	22 – 16
	22 – 35
20P–F3151–00	22 – 10
	22 – 29
20P–F3156–10	22 – 6
	22 – 25
20P–F3157–00	22 – 11
	22 – 30
21C–F3158–00	22 – 13
	22 – 32
20P–F3170–00	22 – 9
	22 – 28
20P–F3173–00	22 – 12
	22 – 31
21C–F3181–10	22 – 14
	22 – 33
20P–F3340–00	22 – 40
20P–F3346–00	22 – 41
20P–F3416–00	21 – 5
20P–F3418–00	21 – 8
20P–F3435–00	21 – 9
5YY–F3462–00	22 – 43
20P–F3469–00	29 – 5
	34 – 20
1CK–F3738–00	22 – 20
	22 – 39
5BP–F3873–01	21 – 1
5BP–F3875–00	22 – 42
20P–F411F–00	23 – 6
5YY–F413B–00	23 – 4
20P–F4188–00	23 – 14
20P–F4191–00	23 – 5
1CK–F4245–00	23 – 2
1CK–F4246–00	23 – 3
20P–F4312–00	23 – 22
20P–F4486–00	23 – 20
38B–F4491–00	23 – 19
1CK–F4710–00	24 – 1
20P–F4741–00	24 – 2
4LS–F4741–00	24 – 5
1CK–F4750–00	24 – 4
21C–F4763–00	24 – 6
20P–F4780–00	24 – 7
1CK–F478E–00	24 – 9

INDICE NUMERICO
NUMERICAL INDEX

CODIGO Nº PART NO.	REF. Nº
1CK–F510C–00	25 – 2
1CK–F5168–00	25 – 1
1CK–F5181–00	25 – 9
1CK–F5186–00	25 – 8
1CK–F530S–00	27 – 2
1CK–F5338–00	27 – 1
54B–F5364–00	27 – 4
20P–F5366–00–33	27 – 6
1CK–F5377–00	27 – 9
1CK–F5381–00	27 – 16
1CK–F5383–00	27 – 18
1CK–F5386–00	27 – 17
1CK–F5388–00	27 – 21
1CK–F5447–00	27 – 10
1CK–F580U–00	26 – 3
1CK–F580W–00	28 – 3
2PB–F580W–00	28 – 3
4ML–F582A–50	32 – 5
1CK–F582U–00	26 – 1
1CK–F582W–00	28 – 1
1CK–F583T–00	30 – 2
1CK–F583V–00	32 – 1
3C1–F5852–00	30 – 5
54C–F5852–00	32 – 9
20P–F5854–00	32 – 11
3RW–F5854–00	30 – 4
3C1–F5855–00	30 – 8
20P–F585B–00	32 – 10
2VN–F5866–00	32 – 6
3RW–F5867–00	30 – 7
20P–F5872–00	30 – 1
20P–F5876–00	30 – 19
1CK–F5886–00	30 – 17
20P–F5894–00	32 – 8
1CK–F5895–00	32 – 14
3FV–F589A–00	32 – 15
3SP–F5914–51	28 – 8
5YP–F5917–00	26 – 8
4S3–F5919–00	28 – 6
5P0–F5919–00	26 – 10
5YP–F5924–00	26 – 11
5YP–F5925–01	26 – 9
5YP–F5937–00	26 – 7
5YP–F5939–00	26 – 13
20P–F6121–00	29 – 1
20P–F6122–00	29 – 2
20P–F622F–00	29 – 11
20P–F622H–00	29 – 10

CODIGO Nº PART NO.	REF. Nº
1CK–F6240–00	29 – 6
20P–F6241–00	29 – 7
20P–F6246–00	29 – 8
20P–F6257–00	29 – 9
2PB–F6280–00	34 – 14
2PB–F6290–00	34 – 15
1CK–F6311–00	29 – 13
1CK–F6312–00	29 – 14
20P–F6315–00	29 – 15
20P–F6335–00	29 – 17
20P–F6372–00	29 – 18
1CK–F7211–00	31 – 31
2YK–F7222–00	32 – 4
4TT–F7238–00	32 – 16
20P–F7311–00	31 – 1
20P–F7411–00	31 – 10
	31 – 23
1CK–F741L–00	31 – 47
1CK–F742L–00	31 – 48
20P–F7431–00	31 – 41
20P–F7435–00	31 – 14
	31 – 27
20P–F7441–00	31 – 42
20P–F7442–00	31 – 8
20P–F7443–00	31 – 21
20P–F7445–00	31 – 19
20P–F7446–01	31 – 38
20P–F7451–00	31 – 9
20P–F7461–00	31 – 22
1CK–F8100–00	17 – 10
20P–F811G–00	42 – 6
1CK–F8186–00	17 – 11
20P–F8284–00	17 – 5
54C–F831U–00	33 – 10
20P–F832U–00	33 – 11
20P–F8356–01	34 – 11
20P–F836B–00	19 – 24
20P–F836R–00	34 – 2
20P–F837L–00	34 – 40
20P–F837M–00	34 – 41
1CK–F8381–00	34 – 1
20P–F8385–10–P0	33 – 2
20P–F8385–10–P2	33 – 2
20P–F8385–10–P3	33 – 2
1CK–F8391–00	34 – 29
1CK–F8392–00	34 – 33
1CK–F8393–00	34 – 30
1CK–F8394–00	34 – 34

CODIGO Nº PART NO.	REF. Nº
20P–F8395–11–P0	33 – 3
20P–F8395–11–P2	33 – 3
20P–F8395–11–P3	33 – 3
1CK–F8398–00	34 – 31
1CK–F8399–00	34 – 35
1CK–F839A–00	34 – 29
1CK–F839A–10	34 – 29
1CK–F839E–00	34 – 33
1CK–F839E–10	34 – 33
1CK–F841G–00	34 – 7
1CK–F841G–10	34 – 7
1CK–F842G–00	34 – 7
20P–F8483–00	34 – 16
20P–F8484–00	34 – 17
3C1–H1410–11	35 – 2
3C1–H1450–10	35 – 1
38B–H1800–01	36 – 1
3AY–H1801–00	36 – 2
3AY–H1828–00	36 – 5
1S7–H1861–00	36 – 4
1CK–H1940–00	43 – 11
1CK–H1950–00	43 – 17
2S5–H1960–00	43 – 7
1CK–H1975–00	43 – 9
20P–H2100–00	42 – 4
1CK–H2115–00	42 – 7
1CK–H2116–00	42 – 9
1CK–H2121–00	42 – 5
20P–H2133–00	37 – 9
	37 – 18
	37 – 28
	37 – 36
20P–H213A–00	37 – 7
	37 – 16
	37 – 26
	37 – 34
20P–H2151–00	43 – 12
1P5–H2310–00	42 – 1
20P–H2370–01	42 – 3
20P–H246B–00	43 – 21
54C–H2501–00	42 – 10
1CK–H2509–00	42 – 8
1CK–H2530–00	42 – 12
21C–H2540–00	43 – 3
1CK–H2589–00	43 – 23
1CK–H2590–00	42 – 13
1CK–H2599–00	43 – 20
20P–H2911–00	41 – 3

CODIGO Nº PART NO.	REF. Nº
1CK–H3310–00	37 – 1
20P–H3311–10	37 – 3
	37 – 12
	37 – 22
	37 – 37
20P–H3318–00	37 – 4
	37 – 13
20P–H3318–10	37 – 23
	37 – 31
5YY–H3318–10	37 – 19
	37 – 38
54B–H331A–00	37 – 2
20P–H331B–00	41 – 6
1CK–H331E–00	37 – 5
1CK–H3320–00	37 – 10
54B–H332A–00	37 – 11
1CK–H332E–00	37 – 14
1CK–H3330–00	37 – 20
20P–H3333–00	37 – 8
	37 – 17
	37 – 27
	37 – 35
54B–H333A–00	37 – 30
1CK–H333E–00	37 – 24
1CK–H3340–00	37 – 29
54B–H334A–00	37 – 21
1CK–H334E–00	37 – 32
5TS–H3350–01	43 – 25
1CK–H3371–00	43 – 27
1CK–H3371–10	43 – 26
1CK–H3500–00	38 – 1
20P–H3546–00	41 – 7
20P–H3592–00	38 – 5
1CK–H3595–00	38 – 7
1CK–H3596–00	38 – 9
20P–H3618–00	37 – 6
	37 – 15
	37 – 25
	37 – 33
1CK–H3755–01	38 – 6
20P–H3912–00	41 – 4
38B–H3922–00	30 – 9
20P–H3927–00	41 – 9
20P–H3945–00	41 – 5
20P–H3951–00	41 – 8
1CK–H3963–00	41 – 2
20P–H3972–01	41 – 1
2PB–H3975–00	41 – 2

CODIGO Nº PART NO.	REF. Nº
1CK–H3980–00	30 – 12
54C–H4300–01	39 – 1
20P–H4312–01	39 – 8
20P–H4314–00	39 – 2
20P–H4345–00	39 – 9
20P–H4347–10	39 – 3
2PB–H4359–00	39 – 15
20P–H4378–00	39 – 4
20P–H4397–00	39 – 7
20P–H4544–01	39 – 6
20P–H4544–11	39 – 5
1CK–H4547–00	40 – 6
1CK–H4710–00	40 – 1
1CK–H4726–00	40 – 5
1CK–H4740–00	40 – 4
1CK–H4744–00	40 – 7
5US–H5110–00	43 – 29
1CK–H5546–00	43 – 2
38B–H5790–00	43 – 5
1CK–H591A–00	43 – 1
5P0–W0041–10	30 – 3
20P–W0042–00	32 – 2
4S3–W0045–00	28 – 9
3C1–W0045–10	26 – 12
20P–W0046–00	28 – 9
3C1–W0047–00	26 – 5
3GD–W0047–00	28 – 5
4C9–W0048–00	26 – 6
4S3–W0048–00	28 – 7
3C1–W0057–00	26 – 4
4S3–W0057–00	28 – 4
54D–WF461–00	23 – 15
1CK–WF47E–00	24 – 10
1CK–XF11E–00–P0	34 – 21
1CK–XF11E–10–P1	34 – 21
1CK–XF11E–20–P2	34 – 21
1CK–XF11F–00–P0	34 – 22
1CK–XF11F–10–P1	34 – 22
1CK–XF11F–20–P2	34 – 22
1CK–XF173–00–P0	19 – 16
1CK–XF173–10–P1	19 – 16
1CK–XF173–20–P2	19 – 16
1CK–XF174–00–P0	19 – 18
1CK–XF174–10–P1	19 – 18
1CK–XF174–20–P2	19 – 18
1CK–XF17C–00–P0	19 – 23
1CK–XF17C–10–P1	19 – 23
1CK–XF17C–20–P2	19 – 23

CODIGO Nº PART NO.	REF. Nº
1CK–XF41A–00–P0	23 – 1
1CK–XF41A–10–P1	23 – 1
1CK–XF41A–20–P4	23 – 1
1CK–XF516–00	25 – 1
1CK–XF516–10	25 – 1
1CK–XF533–00	27 – 1
1CK–XF533–10	27 – 1
1CK–XF835–00–P0	34 – 6
1CK–XF835–10–P1	34 – 6
1CK–XF835–20–P4	34 – 6
1CK–XF836–00–P0	34 – 28
1CK–XF836–10–P1	34 – 28
1CK–XF836–20–P2	34 – 28
1CK–XF83D–00	33 – 12
1CK–XF83D–10–P0	33 – 12
1CK–XF83D–20–P1	33 – 12
1CK–XF83G–00–P0	34 – 32
1CK–XF83G–10–P1	34 – 32
1CK–XF83G–20–P2	34 – 32
20P–XH250–10	42 – 14
90101–08006	27 – 22
90105–08850	1 – 16
90105–10006	21 – 11
90105–10082	26 – 14
90105–10311	20 – 13
90105–10323	17 – 2
90105–106A7	31 – 3
90105–10857	17 – 3
90109–06183	19 – 9
90109–06220	18 – 14
90109–06259	16 – 2
90109–06577	30 – 10
90109–08015	28 – 2
90110–05806	23 – 16
90110–06215	23 – 12
90110–06287	23 – 10
90110–08814	31 – 18
	31 – 37
90110–10012	31 – 16
	31 – 29
90111–05002	34 – 42
90111–05003	19 – 7
	33 – 17
	34 – 27
	34 – 38
90111–06117	18 – 4
	33 – 4
	34 – 23

INDICE NUMERICO
NUMERICAL INDEX

CODIGO Nº PART NO.	REF. Nº
90111–06139	20 – 22
90111–06826	9 – 7
90111–08836	34 – 12
90111–08847	26 – 2
90116–08834	27 – 11
90119–06044	32 – 21
90119–06051	8 – 33
90119–06054	43 – 22
90119–06233	18 – 6
90119–06234	23 – 9
90149–06829	4 – 13
90149–06843	42 – 11
90150–05024	34 – 3
90153–06002	1 – 3
	1 – 25
90159–06181	19 – 3
	19 – 20
	19 – 25
90163–05803	8 – 23
90170–05302	3 – 10
	3 – 13
90170–10012	2 – 23
90179–04003	40 – 9
90179–05523	34 – 4
90179–10811	17 – 4
90179–10813	20 – 15
90179–12802	13 – 4
90179–14001	13 – 19
90179–25615	21 – 6
90183–05061	19 – 6
	33 – 9
	34 – 8
90183–05076	24 – 14
90183–05818	19 – 22
	34 – 37
	39 – 11
90183–05M01	9 – 4
90183–06802	8 – 32
90201–047A2	43 – 16
90201–05036	38 – 2
	39 – 13
90201–05725	43 – 31
90201–06072	6 – 11
90201–08083	32 – 18
90201–08609	1 – 17
90201–08612	9 – 17
90201–10066	31 – 17
	31 – 30

CODIGO Nº PART NO.	REF. Nº
90201–10118	30 – 16
	32 – 24
90201–105E8	12 – 3
90201–12019	13 – 3
	35 – 6
90201–15022	2 – 10
90201–15837	27 – 20
90201–173F4	14 – 23
90201–20814	14 – 22
90201–25290	12 – 7
90202–05180	33 – 18
	34 – 26
	34 – 39
90202–26142	21 – 7
90208–20003	13 – 27
90209–10020	21 – 12
90209–17285	14 – 3
90209–18208	14 – 16
90214–10006	2 – 11
90215–10284	2 – 22
90240–08124	32 – 17
90240–08800	31 – 12
	31 – 25
	31 – 45
90249–02002	31 – 15
	31 – 28
90269–06008	19 – 5
	19 – 21
90280–03017	2 – 3
90282–05031	2 – 21
90338–09802	30 – 13
90338–16008	8 – 30
90340–14824	11 – 5
90340–32823	11 – 7
90387–06023	9 – 6
90387–064W3	6 – 12
90387–067V1	18 – 2
90387–06890	23 – 13
90387–06892	23 – 7
90387–068C2	33 – 6
	34 – 19
	34 – 24
90387–068C4	34 – 43
90387–068C8	18 – 2
90387–068G0	18 – 18
	20 – 18
90387–068H0	20 – 23
90387–068H8	31 – 39

CODIGO Nº PART NO.	REF. Nº
90387–068S1	8 – 41
90387–07819	20 – 8
	20 – 26
90387–08812	31 – 50
90387–10003	31 – 4
90387–10814	20 – 12
90387–15810	2 – 16
90387–22591	29 – 19
90401–10820	30 – 15
	32 – 23
90413–13800	8 – 44
90430–06014	1 – 4
	1 – 13
	1 – 26
90430–09803	8 – 5
90430–10148	43 – 4
90430–12801	43 – 6
90445–08831	19 – 12
90445–08832	19 – 13
90445–12804	6 – 20
90445–16807	31 – 34
90445–21848	31 – 7
90450–27803	6 – 17
	6 – 19
90450–39804	8 – 39
90464–17003	32 – 25
90464–20021	34 – 9
90464–25160	23 – 23
90464–36800	43 – 19
90464–50800	43 – 18
90464–54086	33 – 1
	34 – 10
90467–08003	19 – 14
90467–08808	8 – 4
90467–09006	23 – 24
90467–10808	6 – 21
90467–12085	32 – 13
90467–12800	8 – 25
90467–13802	8 – 38
90467–13816	8 – 35
90467–15012	8 – 37
90467–16805	8 – 46
90467–20050	8 – 27
90467–23059	8 – 31
90480–01558	19 – 4
	34 – 13
	34 – 25
90480–01559	33 – 16

CODIGO Nº PART NO.	REF. Nº
90480–01803	6 – 13
90480–01811	33 – 7
90480–10805	9 – 13
90480–12581	9 – 5
90480–12805	18 – 3
90480–13818	40 – 3
90480–14003	33 – 5
90480–14229	39 – 12
90480–14816	38 – 4
90480–15363	6 – 9
90480–15483	23 – 8
90480–18549	23 – 11
90480–18859	18 – 5
90480–25482	18 – 21
90501–06800	15 – 6
90501–12743	31 – 43
90501–18576	7 – 5
90506–20193	31 – 33
90506–28800	31 – 2
90508–183B9	31 – 11
90508–184B0	31 – 24
90508–32837	16 – 5
90520–02810	34 – 5
90520–08801	19 – 27
91317–05008	43 – 13
91317–05010	23 – 17
91317–06016	35 – 4
91317–06020	4 – 19
	12 – 9
	29 – 4
91317–06025	34 – 18
	35 – 3
91317–06030	29 – 12
91317–06100	1 – 22
91317–08025	29 – 3
91317–08030	21 – 10
91380–06016	9 – 10
91401–20012	16 – 13
	31 – 13
	31 – 26
	31 – 46
	32 – 19
91810–14809	1 – 20
	1 – 21
	10 – 2
	11 – 3
	11 – 13
91811–10005	1 – 7

CODIGO Nº PART NO.	REF. Nº
92012–05016	23 – 21
92012–06010	31 – 36
92012–06016	31 – 20
92012–06020	31 – 40
92012–08012	24 – 3
92012–08020	32 – 20
92907–06200	16 – 12
92907–10600	31 – 5
92990–06200	9 – 9
92990–06600	9 – 11
93101–10805	11 – 18
93102–12809	16 – 8
93102–12877	13 – 25
93102–20806	14 – 26
93103–10804	5 – 2
93106–17802	20 – 16
93106–22808	25 – 3
	27 – 5
93106–26801	27 – 8
93210–09809	4 – 3
93210–11807	2 – 17
93210–11808	1 – 15
93210–13804	2 – 18
93210–14812	11 – 6
93210–15620	32 – 7
93210–19809	5 – 16
	11 – 17
93210–26810	36 – 6
93210–32807	8 – 7
93210–32813	11 – 8
93210–34805	7 – 6
93210–54806	7 – 12
93210–84802	5 – 6
93306–000Y5	5 – 10
93306–001X7	4 – 4
93306–003YN	14 – 24
93306–004XX	14 – 8
93306–054Y5	27 – 7
93306–202YD	2 – 19
93306–202YE	14 – 9
93306–203XS	2 – 20
93306–204Y6	14 – 25
93306–252YH	25 – 4
	27 – 3
93306–305X7	2 – 2
93306–906Y0	4 – 2
93310–325X3	12 – 6
93315–112Y9	13 – 24

CODIGO Nº PART NO.	REF. Nº
93315–31758	20 – 11
93317–318Y5	20 – 2
93410–20809	14 – 4
93410–22039	14 – 17
93450–16115	2 – 6
93501–04805	31 – 44
93505–16844	13 – 23
93608–30839	16 – 7
93822–15808	14 – 27
93900–00824	25 – 6
	27 – 14
94109–17803	25 – 5
94113–17806	27 – 13
94568–A8096	4 – 10
94568–E5132	27 – 24
94668–E5021	27 – 25
94703–00883	1 – 18
95022–06012	7 – 14
95022–06016	11 – 10
95022–06020	7 – 10
	8 – 8
95022–06040	10 – 6
	11 – 4
	11 – 14
95022–06045	10 – 4
95022–06050	11 – 15
95022–06055	10 – 3
95022–06070	10 – 5
95022–06080	7 – 11
95022–06090	11 – 19
95027–06010	4 – 9
	14 – 29
95027–06012	5 – 12
	38 – 8
95027–06014	1 – 11
	30 – 18
	38 – 10
95027–06020	1 – 12
	6 – 3
95027–06025	5 – 11
	5 – 14
	30 – 14
95027–06050	5 – 15
95301–08700	32 – 3
95602–06100	30 – 11
95602–06200	18 – 19
95602–08200	27 – 12
95602–14200	25 – 10

INDICE NUMERICO
NUMERICAL INDEX

CODIGO Nº PART NO.	REF. Nº	CODIGO Nº PART NO.	REF. Nº	CODIGO Nº PART NO.	REF. Nº	CODIGO Nº PART NO.	REF. Nº	CODIGO Nº PART NO.	REF. Nº	CODIGO Nº PART NO.	REF. Nº
95602–14200	27 – 19	99244–00140	33 – 13								
95607–05100	43 – 30	99246–00140	33 – 13								
95607–06100	18 – 9										
	18 – 12										
95617–08620	1 – 5										
95617–10100	31 – 6										
95702–08500	27 – 23										
95707–06500	24 – 8										
95707–08500	9 – 15										
95707–12500	20 – 6										
	35 – 5										
95807–06020	43 – 8										
95817–06030	8 – 12										
95817–08012	31 – 49										
95817–08016	17 – 6										
95817–08025	9 – 16										
95817–08040	9 – 18										
95827–06010	43 – 10										
95827–06012	43 – 28										
95827–06014	20 – 9										
	20 – 19										
	20 – 25										
95827–06025	6 – 10										
97007–06016	42 – 2										
97024–06020	16 – 15										
97027–06014	8 – 42										
97080–06008	9 – 12										
97702–50016	18 – 17										
97707–40012	43 – 15										
97707–50012	19 – 28										
	33 – 14										
	34 – 36										
97707–50014	40 – 2										
97707–50016	38 – 3										
	39 – 10										
	39 – 14										
98507–05012	24 – 13										
	29 – 16										
98507–05020	24 – 12										
98507–05025	7 – 2										
98517–06012	14 – 11										
98707–03020	41 – 11										
98707–04045	32 – 12										
98907–04020	40 – 8										
99001–10600	16 – 6										
99009–10400	12 – 4										
99009–20500	13 – 26										
99241–00140	33 – 13										