YAMAHA

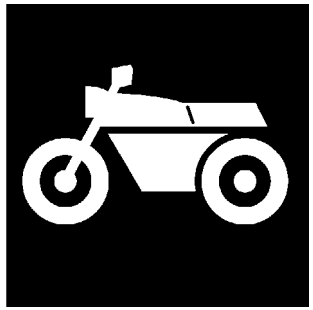

PARTS CATALOGUE
CATALOGO DE REPUESTOS

YZF-R15 (54C1) COLOMBIA

1H54C-261S1

( )

YAMAHA
GENUINE
Parts & Accessories

YZF-R15
CATALOGO DE REPUESTOS
©2009 por Yamaha Motor Co., Ltd.
1ª edición, enero 2009
Todos los derechos reservados.
Toda reproducción o uso no autorizado
sin el consentimiento escrito de
Yamaha Motor Co., Ltd.
quedan expresamente prohibidos
Impreso en Japón.

YZF-R15
PARTS CATALOGUE
©2009 by Yamaha Motor Co., Ltd.
1st edition, January 2009
All rights reserved.
Any reprinting or unauthorized use
without the written permission of
Yamaha Motor Co., Ltd.
is expressly prohibited.
Printed in Japan.

PROLOGO

Este catálogo de repuestos corresponde a las piezas para el o los modelos que figuran en la página de portada. Al formular el pedido de repuestos, se ruega citar este catálogo y especificar correctamente el número y el nombre de las piezas.

1. Las modificaciones y agregados que se hayan realizado después de la edición de este Catálogo de Repuestos, serán anunciados en las Informaciones de Recambios.
   Es recomendable que se hagan las correcciones necesarias en el Catálogo de Repuestos de acuerdo con las Informaciones de Recambios.

2. Abreviaciones
   En este. Catálogo de Repuestos se emplean las siguientes abreviaciones.

   "UR" Usar el número de partes especificado
   "UN" Usar la cantidad necesaria
   "AP" Piezas sustitutivas
   "LM" Fabricación local (Hay que pedir los repuestos en las cercanías)
   "F#" Nº de bastidor (Nº aplicable a la máquina)
   "O/S" Sobredimensionado

3. La cantidad de componentes para el montaje
   - Los componentes, suministrados como conjunto, se describen con un punto (.) que precede al nombre del parte como se indica a continuación.
   - La numeración que aparece a la derecha de cada descripción indica la cantidad de partes por cada unidad de conjunto.

CODIGO Nº	DESCRIPCION	CANT.	OBSERVACIONES
2F5–83310–60	ENSAMBLAJE DE LA LUZ	2	
115–83311–60	.BOMBILLA (6V–18W)	1	

4. Los colores de los componentes se indican como sigue en la columna de "OBSERVACIONES".

CODIGO Nº	DESCRIPCION	CANT.	OBSERVACIONES
2N4–24110–00–X5	COMP. DEL TANQUE	2	MXR
3J1–24240–10	.GRAFICO, DEL TANQUE	1	PARA MXR

5. Debe tenerse en cuenta que las ilustraciones sirven como guia para la búsqueda de los números de partes y no deben usarse para el montaje. Durante el montaje, se recomienda usar el manual de taller correspondiente.

6. EL asterisco (*) antes del número de referencia indica los elementos modificados después de la primera edición.

FOREWORD

This Parts Catalogue is related to the parts for the model(s) on the cover page. When you are ordering replacement parts, please refer to this Parts Catalogue and quote both part numbers and part names correctly.

1. Modifications or additions which have been made after the issue of the Parts Catalogue will be announced in the Parts News.
   It is advisable that you make the necessary corrections to the Parts Catalogue according to the Parts News.

2. Abbreviations
   The following abbreviations are used in this Parts Catalogue.

   “UR” Use specified parts number.
   “UN” Use as many as needed.
   “AP” Alternate Parts
   “LM” Locally Made (Parts need to be ordered locally)
   “F#” Frame No. (Applicable machine No.)
   “O/S” Over Size

3. The number of components for assembly
   - Parts, which are to be supplied in an assembly, are listed with a dot (.) in front of the part name as shown below.
   - The numeral appearing to the right of each component part indicates the quantity of parts for each assembly unit.

PART NO.	DESCRIPTION	Q’TY	REMARKS
2F5–83310–60	FRONT FLASHER LIGHT ASSY	2	
115–83311–60	.BULB (6V–18W)	1	

4. Applicable colours of graphics are represented in the “REMARKS” as shown below.

PART NO.	DESCRIPTION	Q’TY	REMARKS
2N4–24110–00–X5	FUEL TANK COMP.	2	MXR
3J1–24240–10	.GRAPHIC, FUEL TANK	1	FOR MXR

5. Note that the illustrations for reference in finding parts numbers are not to be used for assembling. When assembling, please use the applicable service manual.

6. The asterisk (*) before a reference number indicates modified items after the first edition.

7. Números de serie

Nº de Serie del bastidor

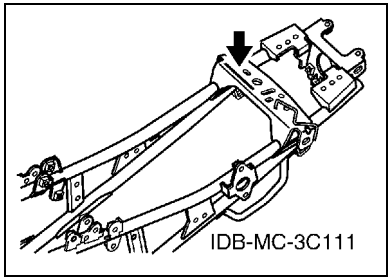

Nº de Serie del motor

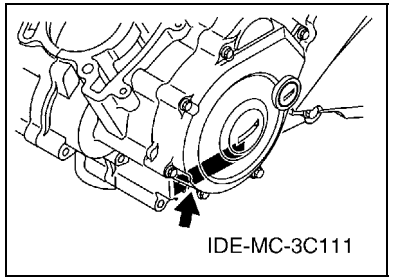

8. Códigos de color aplicables (El símbolo (*) muestra el color de modelo.)

Abreviatura	Nombre de color	Código de color
DPBMY(*)	DEEP PURPLISH BLUE METALLIC Y	1115
DRMK(*)	DEEP RED METALLIC K	0918
MBL2	MAT BLACK 2	0582
SMX(*)	BLACK METALLIC X	0903
YB	YAMAHA BLACK	0033

9. Nº de serie inicial aplicable

Nº de Serie del bastidor

Nº de serie	Nombre de la columna de cantidades	Código de Modelo

Nº de Serie del motor

Nº de serie	Nombre de la columna de cantidades	Código de Modelo

7. Applicable Serial No.

Frame Serial No.

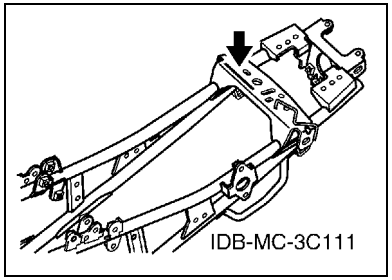

Engine Serial No.

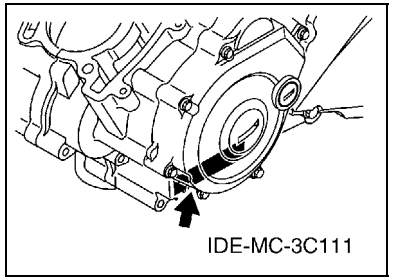

8. Applicable Colour Code (The (*) mark shows Model colour.)

Abbreviation	Colour Name	Colour Code
DPBMY(*)	DEEP PURPLISH BLUE METALLIC Y	1115
DRMK(*)	DEEP RED METALLIC K	0918
MBL2	MAT BLACK 2	0582
SMX(*)	BLACK METALLIC X	0903
YB	YAMAHA BLACK	0033

9. Applicable Starting Serial No.

Frame Serial No.

Serial No.	Name Of Q'ty Column	Model Code

Engine Serial No.

Serial No.	Name Of Q'ty Column	Model Code

CONTENIDO

MOTOR

CILINDRO 1
CIGUENAL & PISTON 2
VALVULA 4
ARBOL DE LEVAS & CADENA 5
BOMBA DE AGUA 6
RADIADOR & MANGUERA 7
BOMBA DE ACEITE 8
ADMISION 9
DESCARGA 11
CARTER 12
CUBIERTA DE CARTER 1 13
EMBRAGUE DEL ARRANQUE 14
EMBRAGUE 15
TRANSMISION 17
LEVA DE CAMBIO & HORQUILLA 19
EJE DE CAMBIO & PEDAL 20

SHASIS

CUADRO 21
GUARDABARRO 22
CUBIERTA LATERAL 23
BRAZO TRASERO & SUSPENSION 25
DIRECCION 26
HORQUILLA DELANTERA 27
DEPOSITO DE COMBUSTIBLE 28
ASIENTO 29
RUEDA DELANTERA 30
CALIBRE FRENO DELANTERA 31
RUEDA TRASERA 32
CALIBRE FRENO TRASERA 33
MANILLAR & CABLE 34
CILINDRO MAESTRO DELANTERO 35
SOPORTE & APOYAPIE 36
CILINDRO MAESTRO TRASERO 38
PATA PROTEGIDA 39
PARABRISAS 41
GENERADOR 44
MOTOR DE ARRANQUE 45
LUZ DE DESTELLADOR 46
MEDIDOR 48
FARO DELANTERO 49
LUZ DE COLA 50
INTERRUPTOR DE MANILLAR&PALANC 51
EQUIPO ELECTRICO 1 52
EQUIPO ELECTRICO 2 53

INDICE

INDICE NUMERICO 54

CONTENTS

ENGINE

CYLINDER 1
CRANKSHAFT & PISTON 2
VALVE 4
CAMSHAFT & CHAIN 5
WATER PUMP 6
RADIATOR & HOSE 7
OIL PUMP 8
INTAKE 9
EXHAUST 11
CRANKCASE 12
CRANKCASE COVER 1 13
STARTER CLUTCH 14
CLUTCH 15
TRANSMISSION 17
SHIFT CAM & FORK 19
SHIFT SHAFT 20

CHASSIS

FRAME 21
FENDER 22
SIDE COVER 23
REAR ARM & SUSPENSION 25
STEERING 26
FRONT FORK 27
FUEL TANK 28
SEAT 29
FRONT WHEEL 30
FRONT BRAKE CALIPER 31
REAR WHEEL 32
REAR BRAKE CALIPER 33
STEERING HANDLE & CABLE 34
FRONT MASTER CYLINDER 35
STAND & FOOTREST 36
REAR MASTER CYLINDER 38
LEG SHIELD 39
WINDSHIELD 41
GENERATOR 44
STARTING MOTOR 45
FLASHER LIGHT 46
METER 48
HEADLIGHT 49
TAILLIGHT 50
HANDLE SWITCH & LEVER 51
ELECTRICAL 1 52
ELECTRICAL 2 53

INDEX

NUMERICAL INDEX 54

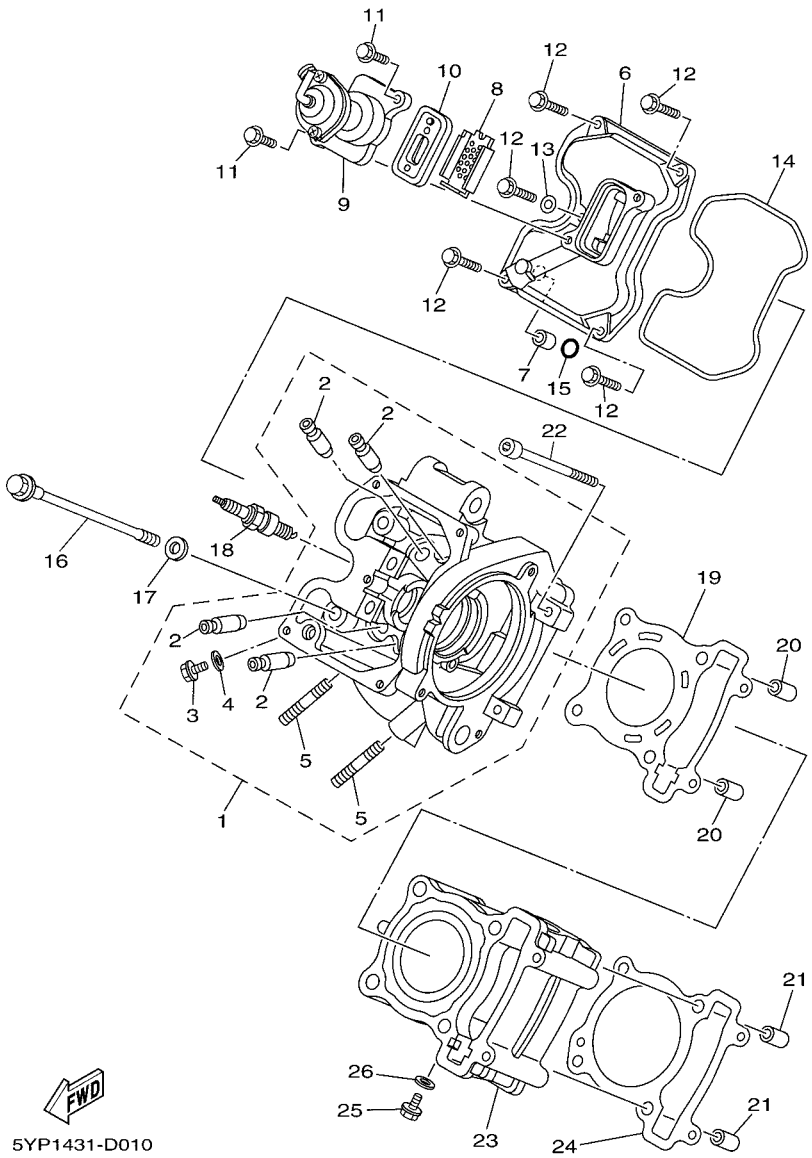

FIG. 1 CILINDRO — CYLINDER

REF. Nº	CODIGO Nº PART NO.	DESCRIPCION DESCRIPTION	54C1					OBSERVACIONES REMARKS
1	1S7–E1102–00	CULATA DE CILINDRO COMPLETA CYLINDER HEAD ASSY	1					
2	1S7–E1133–10	.GUIA DE VALVULA 1 .GUIDE, VALVE 1	4					
3	90153–06803	.TORNILLO HEXAGONAL .SCREW, HEXAGON	1					
4	90430–06014	.JUNTA .GASKET	1					
5	95617–08620	.PERNO DE PUNTAL .BOLT, STUD	2					
6	1S7–E1191–00	TAPA CULATA DE CILINDRO 1 COVER, CYLINDER HEAD 1	1					
7	91811–10005	PASADOR DE CLAVIJA PIN, DOWEL	1					
8	1S7–E482K–00	PLACA PLATE	1					
9	1S7–E4840–00	VALVULA, CORTE DE AIRE AIR CUT VALVE ASSY	1					
10	1S7–E4890–00	VALVULA DE LENGUETA COMPLETA REED VALVE ASSY	1					
11	95027–06014	PERNO, DE BRIDA BOLT, FLANGE	2					
12	95027–06020	PERNO, DE BRIDA BOLT, FLANGE	5					
13	90430–06014	JUNTA GASKET	1					
14	1S7–E1193–00	EMPAQUE GASKET, HEAD COVER 1	1					
15	93210–11803	ANILLO O O-RING	1					
16	90105–08850	TORNILLO BOLT, FLANGE	4					
17	90201–08609	ARANDELA PLANA WASHER, PLATE	4					
18	94700–00872	BUJIA (NGK CR8E) PLUG, SPARK (NGK CR8E)	1					UR UR
	94700–00873	BUJIA (U24ESR-N) PLUG, SPARK (U24ESR-N)	1					UR UR
19	3C1–E1181–01	JUNTA, DE CULATA 1 GASKET, CYLINDER HEAD 1	1					
20	91810–14809	PASADOR DE CLAVIJA PIN, DOWEL	2					
21	91810–14809	PASADOR DE CLAVIJA PIN, DOWEL	2					
22	91317–06100	PERNO BOLT	2					
23	3C1–E1311–00	CILINDRO 1 CYLINDER 1	1					
24	1S7–E1351–00	JUNTA, DE CILINDRO GASKET, CYLINDER	1					
25	90153–06803	TORNILLO HEXAGONAL SCREW, HEXAGON	1					
26	90430–06014	JUNTA GASKET	1					

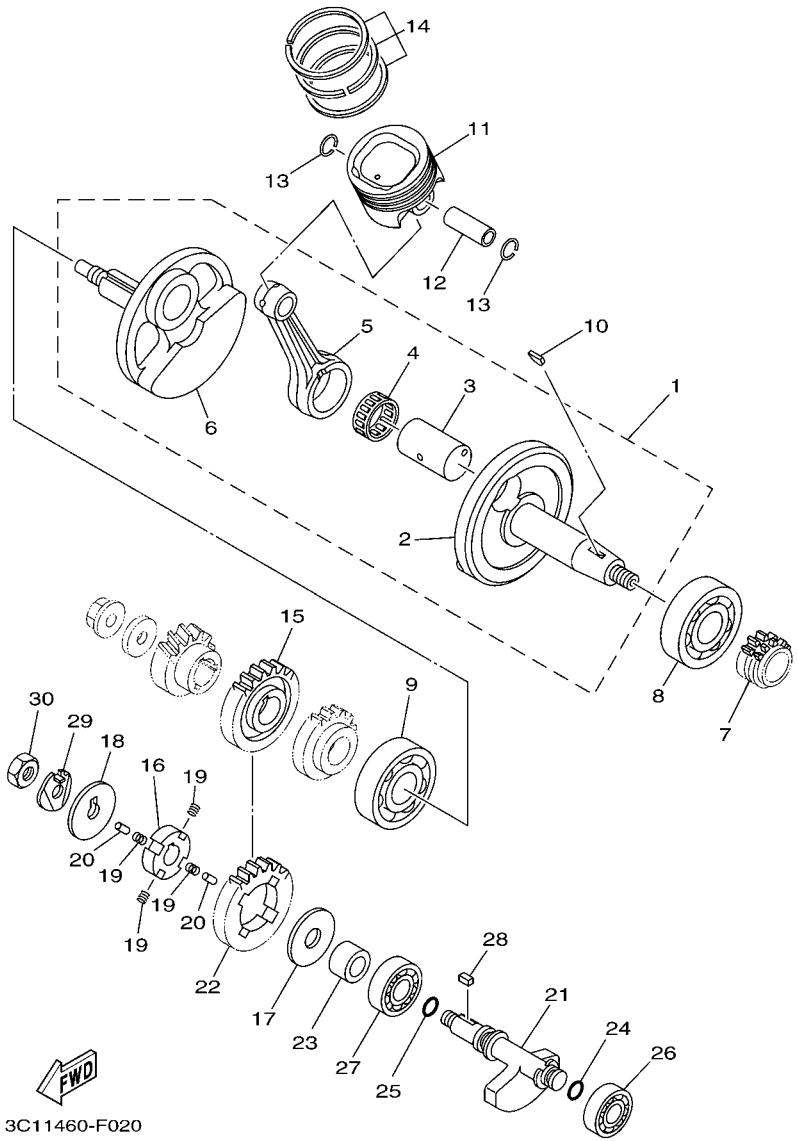

FIG. 2 CIGUENAL & PISTON — CRANKSHAFT & PISTON

REF. Nº	CODIGO Nº PART NO.	DESCRIPCION DESCRIPTION	54C1					OBSERVACIONES REMARKS
1	3C1–E1400–00	CIGUENAL COMPLETO CRANKSHAFT ASSY	1					
2	3C1–E1412–00	.MANIVELA 1 .CRANK 1	1					
3	3C1–11681–00	.PASADOR MANIVELA 1 .PIN, CRANK 1	1					
4	93310–528YB	.COJINETE DE RODILLOS .BEARING	1					
5	3C1–E1651–10	.BIELA .ROD, CONNECTING	1					
6	3C1–E1422–00	.MANIVELA 2 .CRANK 2	1					
7	3C1–E1549–00	CATALINA CADENA DE LEVA SPROCKET, CAM CHAIN	1					
8	93306–305YF	COJINETE BEARING	1					
9	93306–305X7	COJINETE BEARING	1					
10	90280–03017	CUNA WOODRUFF KEY, WOODRUFF	1					
11	3C1–E1631–00	PISTON (NORMA) PISTON (STD)	1					
12	3C1–E1633–00	PASADOR, PISTON PIN, PISTON	1					
13	93450–16115	SEGURO CIRCLIP	2					
14	3C1–11603–00	JUEGO DE ANILLOS (NORMA) PISTON RING SET (STD)	1					
15	3C1–11536–00	ENGRANAJE TRACCION GEAR, DRIVE	1					
16	3C1–E1496–00	COPA TOPE BOSS, BUFFER	1					
17	90201–15821	ARANDELA PLANA WASHER, PLATE	1					
18	90214–10800	ARANDELA DE POSICION WASHER, CLAW	1					
19	90501–16800	RESORTE DE COMPRESION SPRING, COMPRESSION	4					
20	93604–08800	PASADOR DE CLAVIJA PIN, DOWEL	2					
21	3C1–11454–00	PESO 1 WEIGHT 1	1					
22	3C1–11531–00	ENGRANAJE CONTRAPESO GEAR, BALANCE WEIGHT	1					
23	90387–15810	ESPACIADOR COLLAR	1					
24	93210–11805	ANILLO O O-RING	1					
25	93210–13803	ANILLO O O-RING	1					
26	93306–252Y9	COJINETE BEARING	1					
27	93306–203XK	COJINETE BEARING	1					

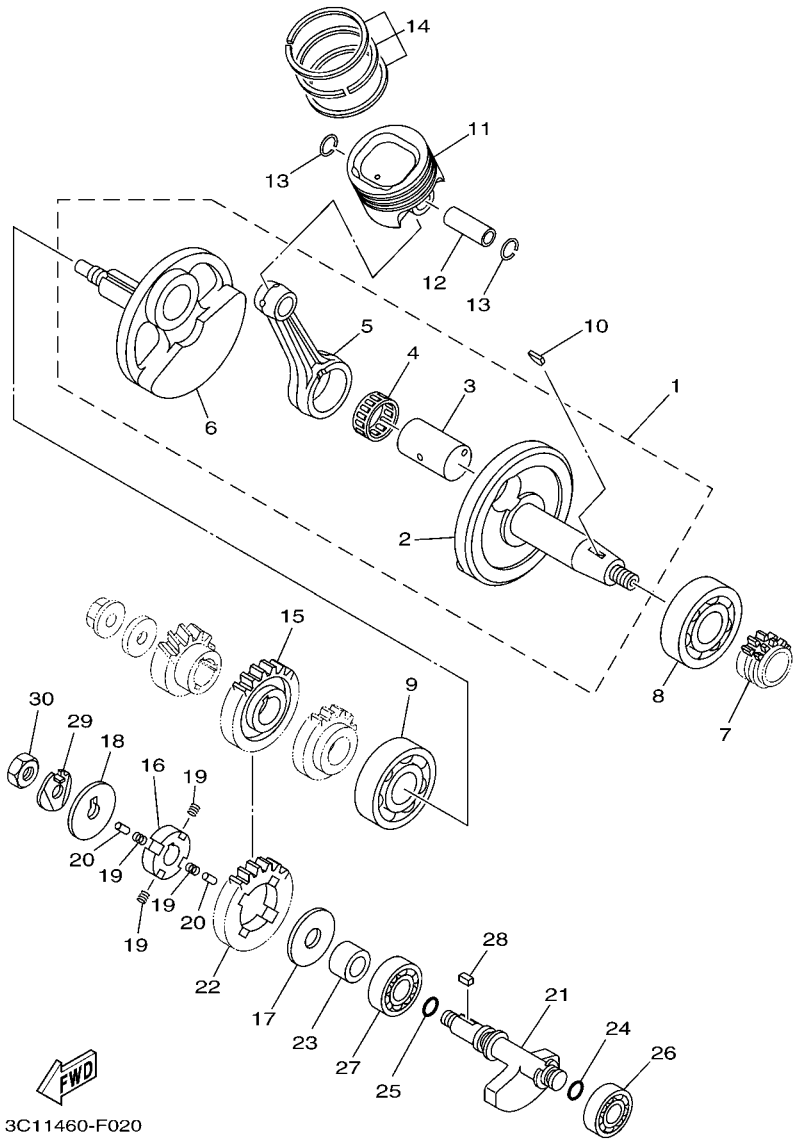

FIG. 2 CIGUENAL & PISTON — CRANKSHAFT & PISTON

REF. Nº	CODIGO Nº PART NO.	DESCRIPCION DESCRIPTION	54C1					OBSERVACIONES REMARKS
28	90282–05031	CHAVETA, RECTA KEY, STRAIGHT	1					
29	90215–10284	ARANDELA DE CIERRE WASHER, LOCK	1					
30	90170–10405	TUERCA NUT	1					

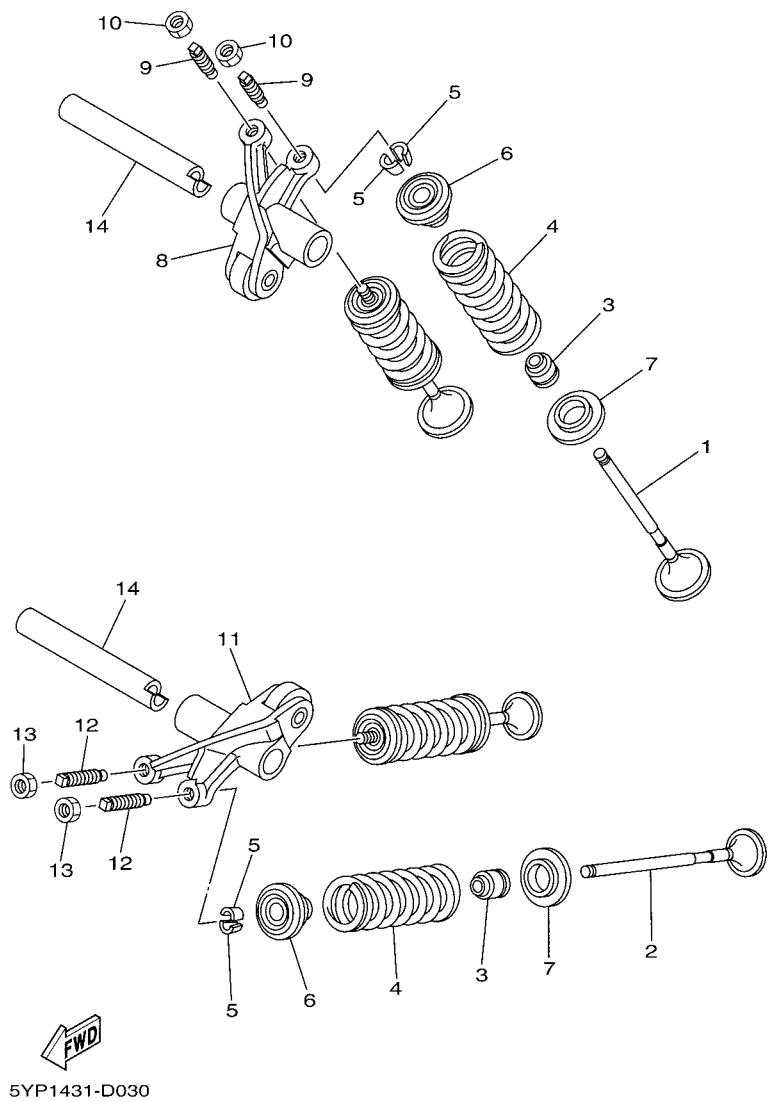

FIG. 3 VALVULA VALVE

REF. Nº	CODIGO Nº PART NO.	DESCRIPCION DESCRIPTION	54C1					OBSERVACIONES REMARKS
1	1S7–E2111–00	VALVULA DE ADMISION VALVE, INTAKE	2					
2	1S7–E2121–00	VALVULA DE ESCAPE VALVE, EXHAUST	2					
3	2S6–E2119–00	SELLO DE ACEITE VALVULA SEAL, VALVE STEM	4					
4	3C1–E2113–00	RESORTE VALVULA INTERNA SPRING, VALVE INNER	4					
5	3S0–E2118–00	SEGURO DE VALVULA COTTER, VALVE	8					
6	5YP–12117–00	RETEN RESORTE DE VALVULA RETAINER, VALVE SPRING	4					
7	5YP–E2126–00	ASIENTO RESORTE DE VALVULA2 SEAT, VALVE SPRING 2	4					
8	1S7–E2151–00	BRAZO DE BALANCIN DE VALVULA ARM, VALVE ROCKER	1					
9	3C1–12159–00	TORNILLO DE AJUSTE DE VALVULA SCREW, VALVE ADJUSTING	2					
10	90170–05302	TUERCA NUT	2					
11	1S7–E2161–00	BRAZO DE BALANCIN DE VALVULA ARM, VALVE ROCKER 2	1					
12	3C1–12159–00	TORNILLO DE AJUSTE DE VALVULA SCREW, VALVE ADJUSTING	2					
13	90170–05302	TUERCA NUT	2					
14	1S7–E2156–00	EJE DE BALANCIN SHAFT, ROCKER 2	2					

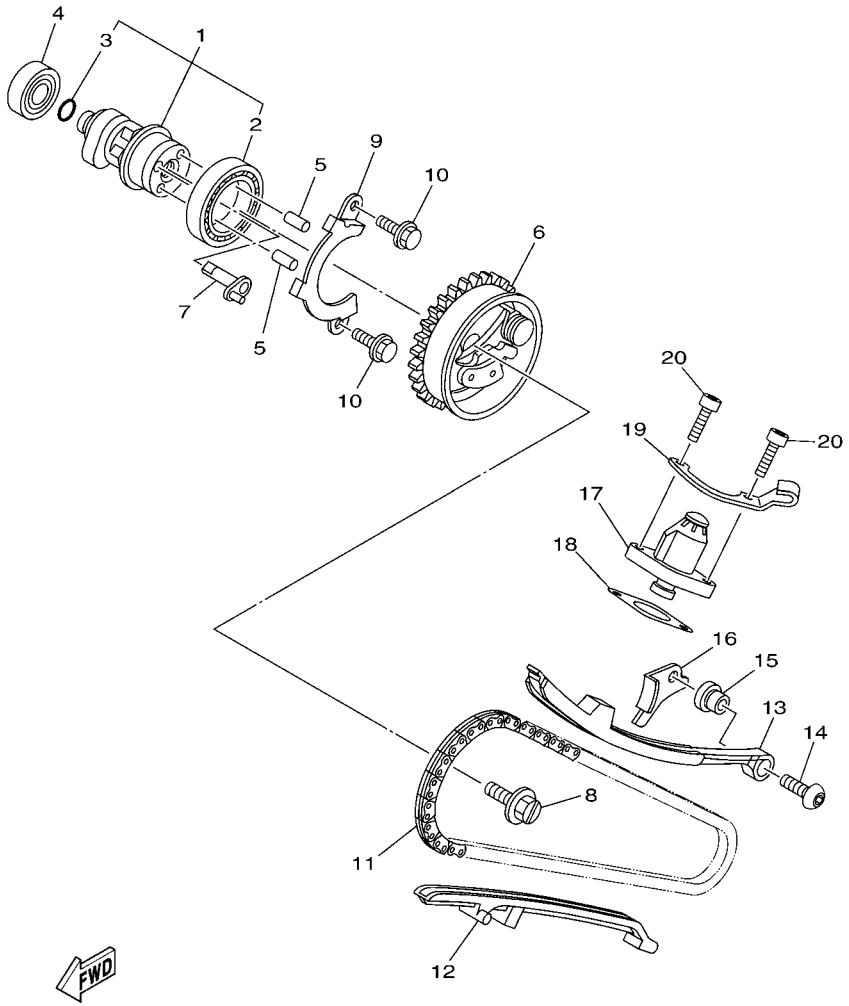

3C11460-F040

FIG. 4 ARBOL DE LEVAS & CADENA CAMSHAFT & CHAIN

REF. Nº	CODIGO Nº PART NO.	DESCRIPCION DESCRIPTION	54C1					OBSERVACIONES REMARKS
1	3C1–E2170–00	ARBOL DE LEVAS COMPLETO 1 CAMSHAFT ASSY 1	1					
2	93306–906Y0	.COJINETE .BEARING	1					
3	93210–09806	.ANILLO O .O-RING	1					
4	93306–001X6	COJINETE BEARING	1					
5	93605–06800	PASADOR DE CLAVIJA PIN, DOWEL	2					
6	3C1–E2280–00	EQUIPO DE DESCOMPRESION DECOMPRESSION ASSY	1					
7	1S7–E2288–00	LEVA DE DESCOMPRESION CAM, DECOMPRESSION	1					
8	5YP–E2157–00	PERNO BOLT	1					
9	1S7–E111F–00	PLACA PLATE	1					
10	95027–06010	PERNO, DE BRIDA BOLT, FLANGE	2					
11	94568–A8096	CADENA CHAIN	1					
12	5YP–E2231–00	TOPE DE GUIA 1 GUIDE, STOPPER 1	1					
13	3C1–E2241–00	TOPE DE GUIA 2 GUIDE, STOPPER 2	1					
14	90149–06829	TORNILLO DE REGLAJE SCREW	1					
15	3C1–E5598–00	COLLAR COLLAR	1					
16	3C1–E2256–00	CUBIERTA DE CADENA COVER, CHAIN	1					
17	2P2–E2210–00	TENSOR CADENA DE LEVA TENSIONER ASSY, CAM CHAIN	1					
18	5MX–E2213–00	EMPAQUE DE CAJA TENSOR GASKET, TENSIONER CASE	1					
19	3C1–E5441–00	SOSTEN DE CABLE DE EMBRAGUE HOLDER, CLUTCH CABLE	1					
20	91317–06020	PERNO BOLT	2					

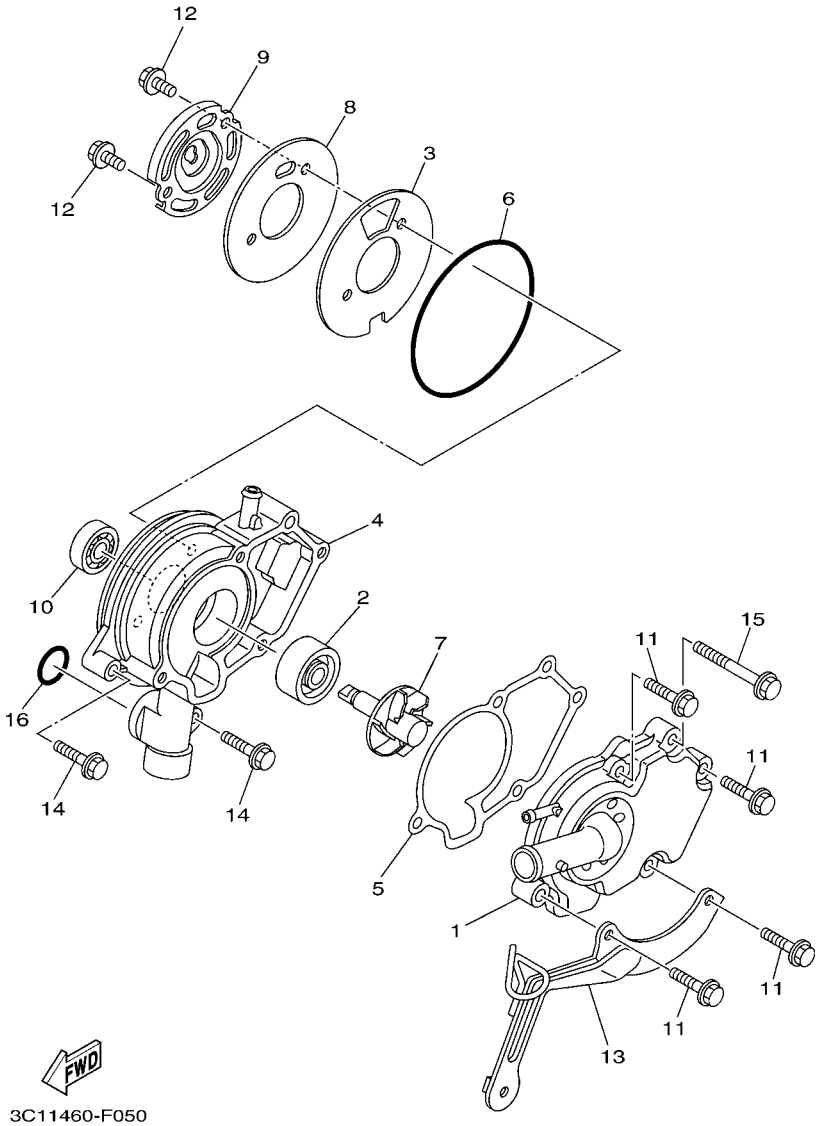

FIG. 5 BOMBA DE AGUA WATER PUMP

REF. Nº	CODIGO Nº PART NO.	DESCRIPCION DESCRIPTION	54C1					OBSERVACIONES REMARKS
1	3C1–E2422–00	CUBIERTA DE CAJA COVER, HOUSING	1					
2	93103–10801	SELLO ACEITE OIL SEAL	1					
3	1S7–E2428–00	JUNTA, DE CBTA.CAJA 2 GASKET, HOUSING COVER 2	1					
4	1S7–E1185–01	CUBIERTA CULATA CIL.LAT.3 COVER, CYLINDER HEAD SIDE 3	1					
5	1S7–E1196–00	EMPAQUE DE CULATA GASKET, CYLINDER HEAD SIDE	1					
6	93210–84801	ANILLO O O-RING	1					
7	1S7–E2450–00	EJE IMPULSOR COMPLETO IMPELLER SHAFT ASSY	1					
8	1S7–E1951–00	PLACA PLATE	1					
9	1S7–E1952–01	PLACA PLATE	1					
10	93306–000Y3	COJINETE BEARING	1					
11	95027–06025	PERNO, DE BRIDA BOLT, FLANGE	4					
12	95027–06012	PERNO, DE BRIDA BOLT, FLANGE	2					
13	3C1–E2443–00	APOYO STAY	1					
14	95027–06025	PERNO, DE BRIDA BOLT, FLANGE	2					
15	95027–06050	PERNO, DE BRIDA BOLT, FLANGE	1					
16	93210–19809	ANILLO O O-RING	1					

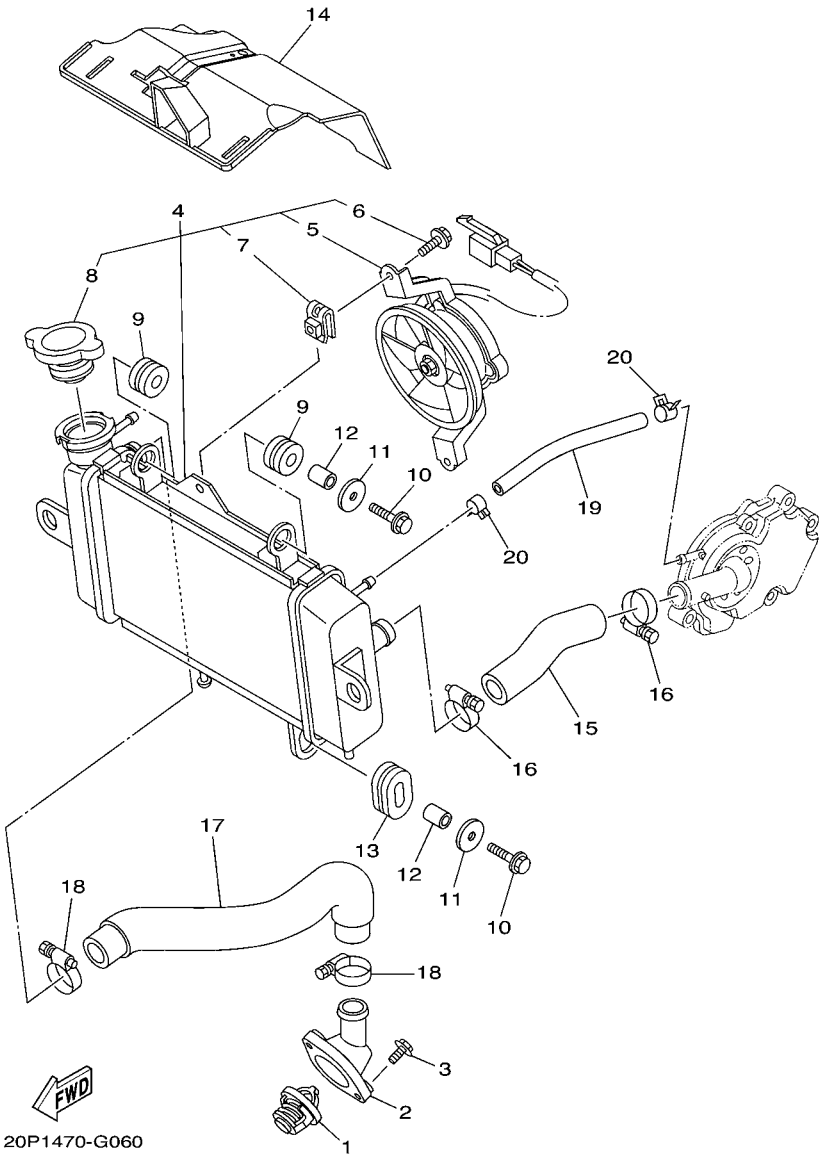

FIG. 6 RADIADOR & MANGUERA RADIATOR & HOSE

REF. Nº	CODIGO Nº PART NO.	DESCRIPCION DESCRIPTION	54C1					OBSERVACIONES REMARKS
1	5YP–12411–00	TERMOSTAT THERMOSTAT	1					
2	1S7–E2413–00	CUBIERTA TERMOSTATO COVER, THERMOSTAT	1					
3	95027–06020	PERNO, DE BRIDA BOLT, FLANGE	2					
4	20P–E240A–00	RADIADOR COMPLETO RADIATOR ASSY	1					
5	5YP–E2405–00	.COMPRESOR .BLOWER ASSY	1					
6	5YP–E2675–00	.PERNO, SUJECION VENTILADOR .BOLT, BLOWER HOLDING	2					
7	5YP–E2671–00	.TUERCA 1 .NUT 1	2					
8	5ST–E2590–00	.TAPON, DEL RADIADOR .CAP, RADIATOR	1					
9	90480–15363	TAPON GROMMET	2					
10	95827–06025	TORNILLO BOLT, FLANGE	2					
11	90201–06072	ARANDELA PLANA WASHER, PLATE	2					
12	90387–064W3	ESPACIADOR COLLAR	2					
13	90480–01803	TAPON GROMMET	1					
14	20P–E2467–00	CUBIERTA DEL RADIADOR COVER, RADIATOR	1					
15	20P–E2481–00	TUBO 1 PIPE 1	1					
16	90450–28801	BRIDA, MANGUERA HOSE CLAMP ASSY	2					
17	20P–E2482–00	TUBO 2 PIPE 2	1					
18	90450–28801	BRIDA, MANGUERA HOSE CLAMP ASSY	2					
19	90445–12804	TUBO HOSE	1					
20	90467–10808	PRESILLA CLIP	2					

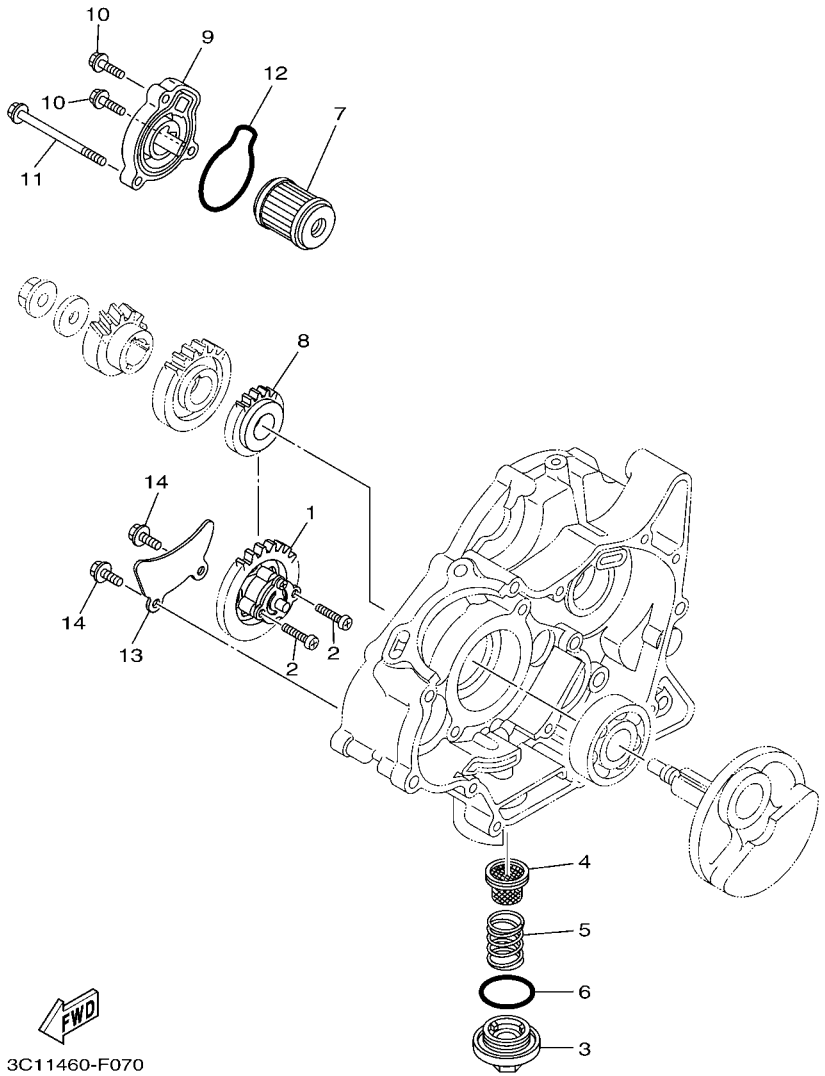

FIG. 7 BOMBA DE ACEITE OIL PUMP

REF. Nº	CODIGO Nº PART NO.	DESCRIPCION DESCRIPTION	54C1					OBSERVACIONES REMARKS
1	3C1–E3300–00	BOMBA DE ACEITE COMPLETA OIL PUMP ASSY	1					
2	98507–05025	TORNILLO DE CABEZA PLANA SCREW, PAN HEAD	2					
3	1S7–E5351–00	TAPON DE DRENAJE PLUG, DRAIN	1					
4	1S7–E3411–00	FILTRO DE ACEITE STRAINER, OIL	1					
5	90501–18576	RESORTE DE COMPRESION SPRING, COMPRESSION	1					
6	93210–34802	ANILLO O O-RING	1					
7	1S7–E3440–00	ELEMENTO FILTRO DE ACEITE ELEMENT ASSY, OIL CLEANER	1					
8	3C1–E3324–00	ENGRANAJE TRACC. DE BOMBA GEAR, PUMP DRIVE	1					
9	3C1–E3447–00	TAPA DEL ELEMENTO COVER, OIL ELEMENT	1					
10	9502L–06020	PERNO, DE BRIDA BOLT, FLANGE	2					
11	9502L–06080	PERNO, DE BRIDA BOLT, FLANGE	1					
12	93210–54805	ANILLO O O-RING	1					
13	3C1–E3327–00	CUBIERTA ENGRANAJE DE BOMBA COVER, PUMP GEAR	1					
14	9502L–06012	PERNO, DE BRIDA BOLT, FLANGE	2					

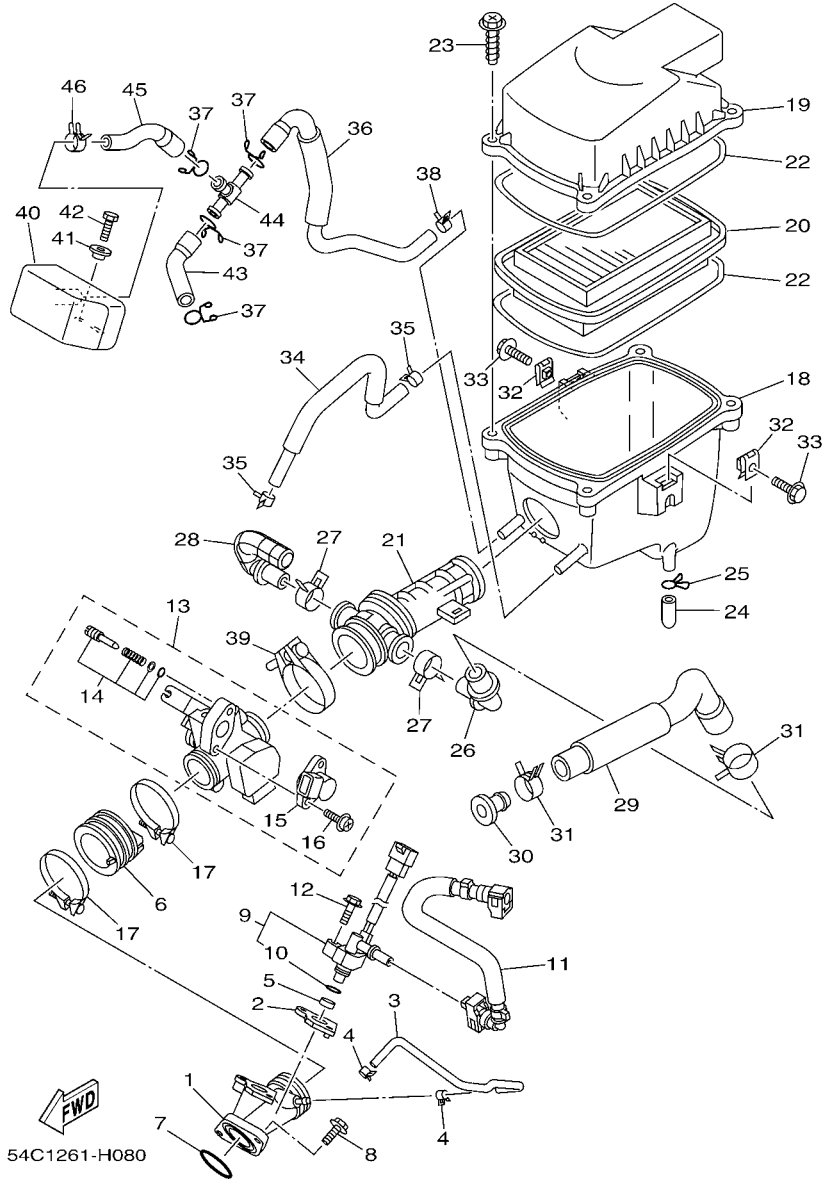

FIG. 8 ADMISION INTAKE

REF. Nº	CODIGO Nº PART NO.	DESCRIPCION DESCRIPTION	54C1					OBSERVACIONES REMARKS
1	3C1–E3585–00	MULTIPLE MANIFOLD	1					
2	3C1–E3556–00	EMPAQUE GASKET, MANIFOLD	1					
3	3C1–E3542–00	MANGUERA, DE VACIO 1 HOSE, VACUUM SENSING 1	1					
4	90467–08092	PRESILLA CLIP	2					
5	90430–09800	JUNTA GASKET	1					
6	3C1–E3586–00	TOBERA DE CARBURADOR 1 JOINT, CARBURETOR 1	1					
7	93210–32807	ANILLO O O-RING	1					
8	9502N–06020	PERNO, DE BRIDA BOLT, FLANGE	2					
9	3C1–13770–10	INYECTOR INJECTOR ASSY	1					
10	5CA–14147–00	.ANILLO O .O-RING	1					
11	3C1–13971–00	ANILLO DE ESPACIADOR PIPE, FUEL 1	1					
12	95817–06030	TORNILLO BOLT, FLANGE	1					
13	3C1–E3750–00	CAJA DE ACELERADOR COMPL. THROTTLE BODY ASSY	1					
14	5JW–14104–00	.CJTO. TORNNILLO DE AIRE .AIR SCREW SET	1					
15	2S5–1410H–00	.SOLENOIDE VALVULA .FUEL CUT SOLENOID VALVE	1					
16	1S4–14216–00	.TORNILLO .SCREW	1					
17	5MX–E3575–01	BANDA BAND	2					
18	20P–E4411–00	CAJA FILTRO DEL AIRE 1 CASE, AIR CLEANER 1	1					
19	20P–E4412–00	TAPA CAJA DEL FILTRO 1 CAP, CLEANER CASE 1	1					
20	20P–E4450–00	ELEMENTO COMP.FILTRO DE AIRE ELEMENT ASSY, AIR CLEANER	1					
21	20P–E4453–00	UNION DEL FILTRO DEL AIRE 1 JOINT, AIR CLEANER 1	1					
22	3C1–E4452–00	SELLO SEAL	2					
23	90163–05803	TORNILLO ROSCA HEMBRA SCREW, TAPPING	4					
24	20P–E443E–00	TUBO, DRENAJE PIPE, DRAIN	1					
25	90467–12800	PRESILLA CLIP	1					
26	20P–E4485–00	TUBO DE UNION PIPE, JOINT	1					
27	90467–20050	PRESILLA CLIP	2					

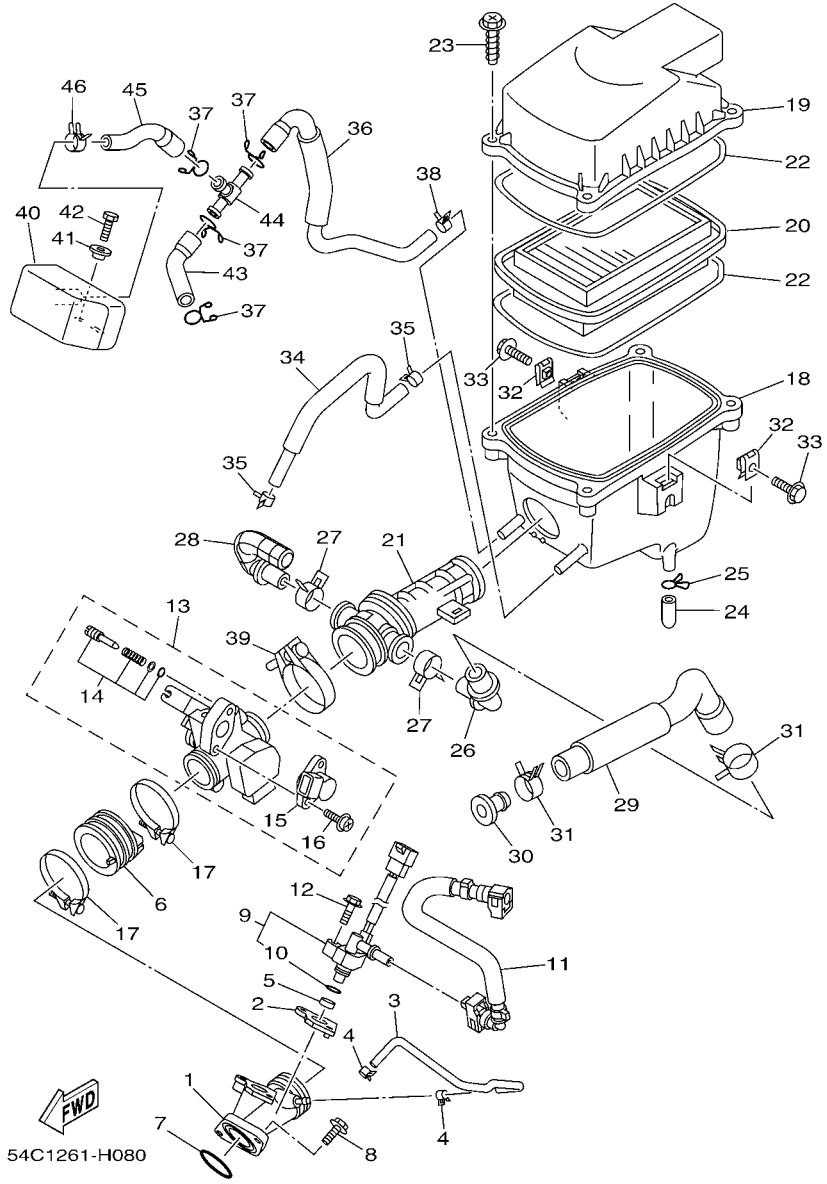

FIG. 8 ADMISION INTAKE

REF. Nº	CODIGO Nº PART NO.	DESCRIPCION DESCRIPTION	54C1					OBSERVACIONES REMARKS
28	20P–E4419–00	TUBO PIPE	1					
29	20P–E441J–00	TUBO PIPE, SILENCER	1					
30	90338–16008	TAPON PLUG	1					
31	90467–23059	PRESILLA CLIP	2					
32	90183–06023	TUERCA DE RESORTE NUT, SPRING	2					
33	90119–06051	TORNILLO CON ARANDELA BOLT, WITH WASHER	2					
34	20P–E1166–00	TUBO RESPIRADERO 1 PIPE, BREATHER 1	1					
35	90467–13816	PRESILLA CLIP	2					
36	20P–E4882–00	TUBO 2 HOSE, BEND 2	1					
37	90467–15012	PRESILLA CLIP	4					
38	90467–13802	PRESILLA CLIP	1					
39	90450–39804	BRIDA, MANGUERA HOSE CLAMP ASSY	1					
40	20P–E4877–00	RESONATOR RESONATOR	1					
41	90387–068S1	ESPACIADOR COLLAR	2					
42	97027–06014	PERNO BOLT, HEXAGON	2					
43	20P–E4881–00	TUBO 1 HOSE, BEND 1	1					
44	90413–13800	UNION WAY 3	1					
45	20P–E4883–00	TUBO 3 HOSE, BEND 3	1					
46	90467–16805	PRESILLA CLIP	1					

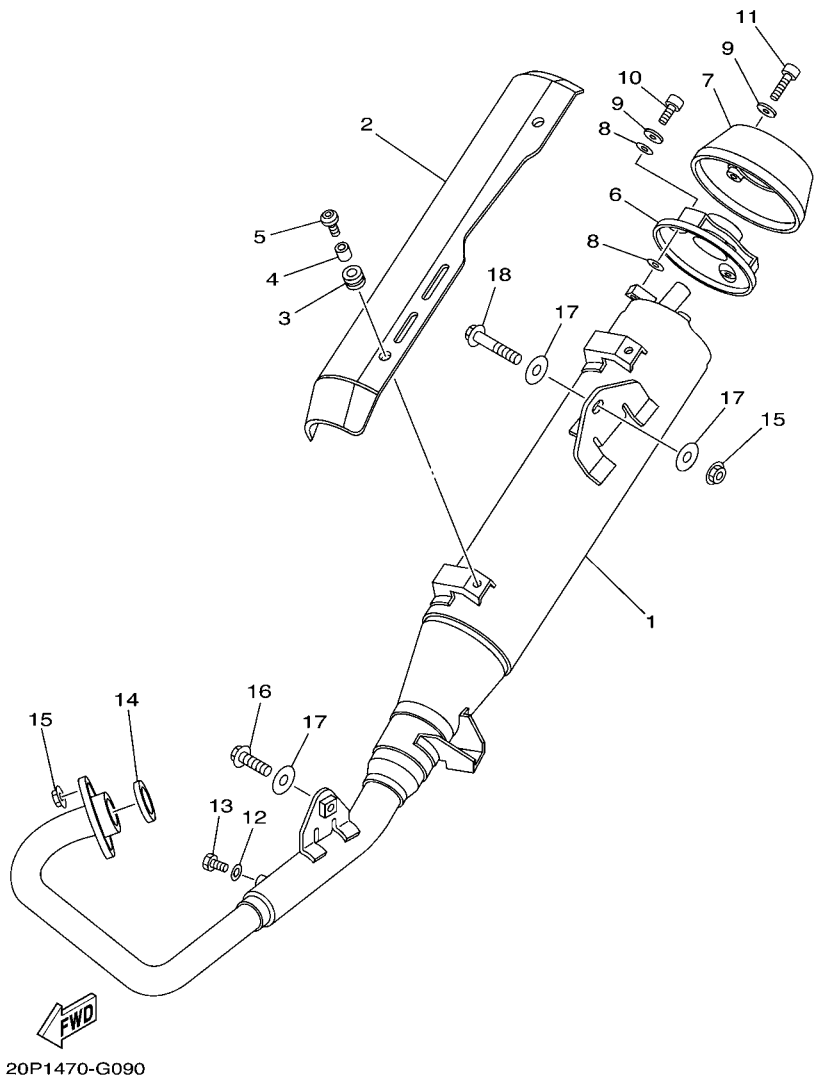

FIG. 9 DESCARGA EXHAUST

REF. Nº	CODIGO Nº PART NO.	DESCRIPCION DESCRIPTION	54C1					OBSERVACIONES REMARKS
1	20P–E4703–00	SILENCIADOR COMPL. 1 MUFFLER COMP. 1	1					
2	20P–E4728–00	PROTECTOR DE SILENCIADOR PROTECTOR, MUFFLER 2	1					
3	90480–12581	TAPON GROMMET	4					
4	90387–06023	ESPACIADOR COLLAR	4					
5	90149–06264	TORNILLO DE REGLAJE SCREW	4					
6	20P–E4629–00	SOPORTE DE PROTECTOR STAY, PROTECTOR	1					
7	20P–E4799–00	TAPA CAP	1					
8	5GM–14766–00	ARANDELA DE PROTECTOR WASHER, PROTECTOR	6					
9	92990–06200	ARANDELA PLANA WASHER, PLAIN	6					
10	91380–06012	PERNO BOLT	3					
11	91380–06016	PERNO BOLT	3					
12	92990–06600	ARANDELA PLANA WASHER, PLATE	1					
13	97080–06008	PERNO BOLT	1					
14	21C–E4613–00	JUNTA, TUBO DE ESCAPE GASKET, EXHAUST PIPE	1					
15	95707–08500	TUERCA DE BRIDA NUT, FLANGE	3					
16	95817–08025	TORNILLO BOLT, FLANGE	1					
17	90201–08612	ARANDELA PLANA WASHER, PLATE	3					
18	95817–08040	TORNILLO BOLT, FLANGE	1					

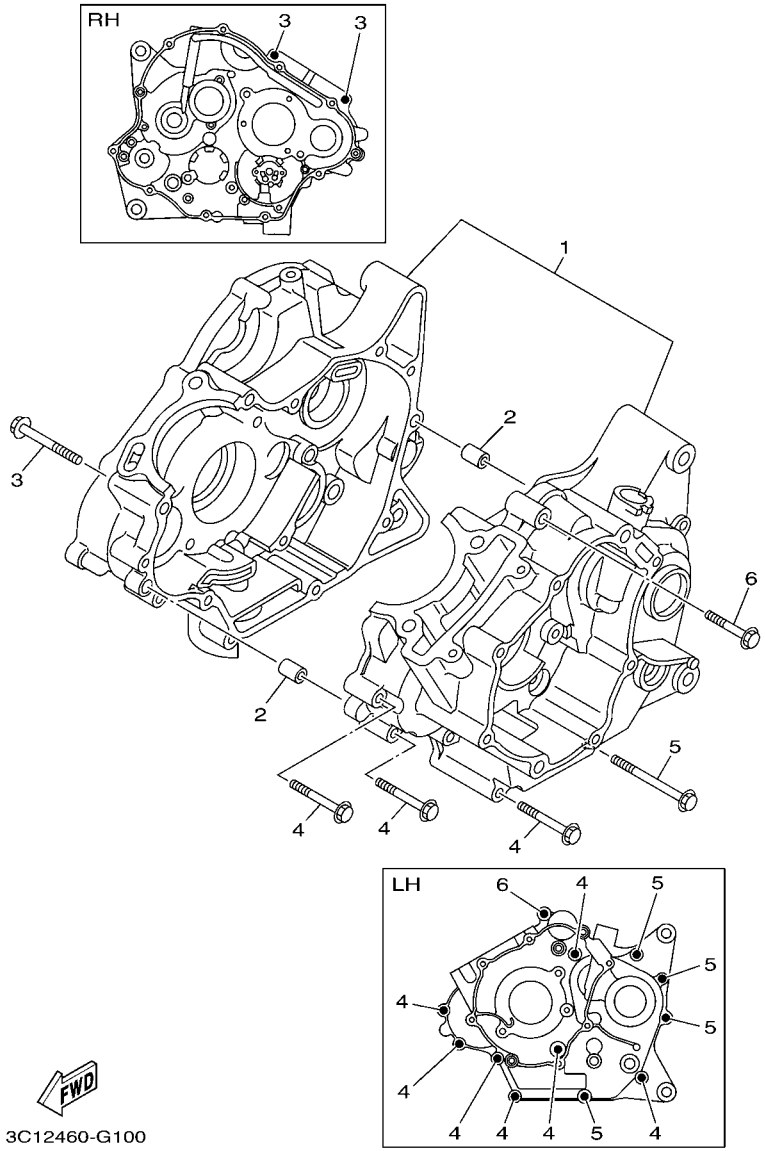

FIG. 10 CARTER — CRANKCASE

REF. Nº	CODIGO Nº PART NO.	DESCRIPCION DESCRIPTION	54C1					OBSERVACIONES REMARKS
1	3C1–E5150–01	CARTER COMPLETO CRANKCASE ASSY	1					
2	91810–14809	PASADOR DE CLAVIJA PIN, DOWEL	2					
3	9502L–06055	PERNO, DE BRIDA BOLT, FLANGE	2					
4	9502L–06045	PERNO, DE BRIDA BOLT, FLANGE	7					
5	9502L–06070	PERNO, DE BRIDA BOLT, FLANGE	4					
6	9502L–06040	PERNO, DE BRIDA BOLT, FLANGE	1					

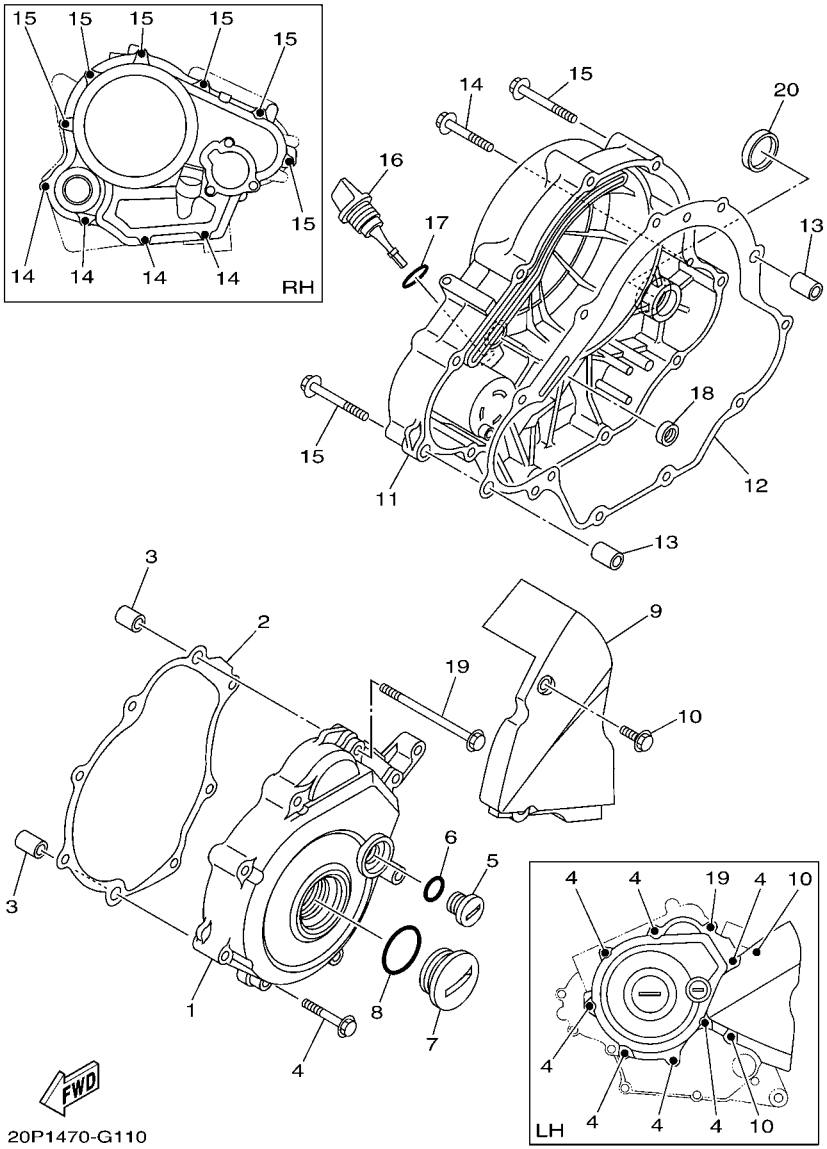

FIG. 11 CUBIERTA DE CARTER 1 CRANKCASE COVER 1

REF. Nº	CODIGO Nº PART NO.	DESCRIPCION DESCRIPTION	54C1					OBSERVACIONES REMARKS
1	3C1–E5411–00	CUBIERTA DE CARTER 1 COVER, CRANKCASE 1	1					
2	3C1–E5451–00	EMPAQ DE CUBIERTA DE CARTER GASKET, CRANKCASE COVER 1	1					
3	91810–14809	PASADOR DE CLAVIJA PIN, DOWEL	2					
4	9502L–06040	PERNO, DE BRIDA BOLT, FLANGE	7					
5	90340–14805	TORNILLO, DE DRENAJE PLUG, STRAIGHT SCREW	1					
6	93210–148F8	ANILLO O O-RING	1					
7	90340–32810	TORNILLO, DE DRENAJE PLUG, STRAIGHT SCREW	1					
8	93210–328G3	ANILLO O O-RING	1					
9	20P–E5418–00	CUBIERTA CAJA DE CADENA COVER, CHAIN CASE	1					
10	95022–06016	PERNO, DE BRIDA BOLT, FLANGE	2					
11	3C1–E5421–00	TAPA DE CARTER DERECHA COVER, CRANKCASE 2	1					
12	3C1–E5461–00	JUNTA TAPA CARTER DERECHO 2 GASKET, CRANKCASE COVER 2	1					
13	91810–14809	PASADOR DE CLAVIJA PIN, DOWEL	2					
14	9502L–06040	PERNO, DE BRIDA BOLT, FLANGE	4					
15	9502L–06050	PERNO, DE BRIDA BOLT, FLANGE	6					
16	3C1–E5362–00	TAPON DEL NIVEL DE ACEITE PLUG, OIL LEVEL	1					
17	93210–198F9	ANILLO O O-RING	1					
18	93101–10843	SELLO ACEITE OIL SEAL	1					
19	9502L–06090	PERNO, DE BRIDA BOLT, FLANGE	1					
20	90338–30802	TAPON PLUG	1					

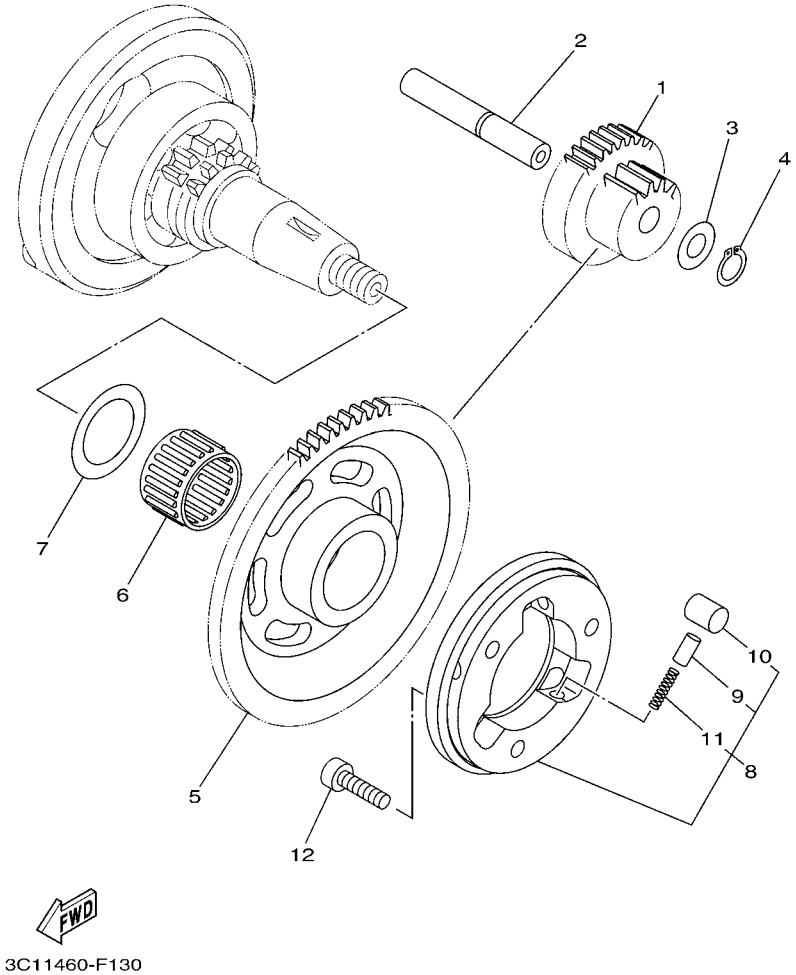

FIG. 12 EMBRAGUE DEL ARRANQUE STARTER CLUTCH

REF. Nº	CODIGO Nº PART NO.	DESCRIPCION DESCRIPTION	54C1					OBSERVACIONES REMARKS
1	3C1–E5514–00	ENGRANAJE 2 GEAR 2	1					
2	3C1–E5521–00	EJE 1 SHAFT 1	1					
3	90201–105E8	ARANDELA PLANA WASHER, PLATE	1					
4	99009–10400	PRESILLA REDONDA CIRCLIP	1					
5	3C1–E5524–00	RUEDA DE ARRANQUE WHEEL, STARTER	1					
6	93310–325X1	COJINETE DE RODILLOS BEARING	1					
7	90201–25290	ARANDELA PLANA WASHER, PLATE	1					
8	5YP–E5580–00	ENSAMBLE EXT.EMBRAGUE ARRANQUE STARTER CLUTCH OUTER ASSY	1					
9	5HV–E5583–00	.TAPA RESORTE EMBRAG.ARRANQ. .CAP, STARTER CLUTCH SPRING	3					
10	5YP–E5614–00	.PASADOR DE CLAVIJA .PIN, DOWEL	3					
11	90501–030A0	.RESORTE DE COMPRESION .SPRING, COMPRESSION	3					
12	91317–06020	PERNO BOLT	3					

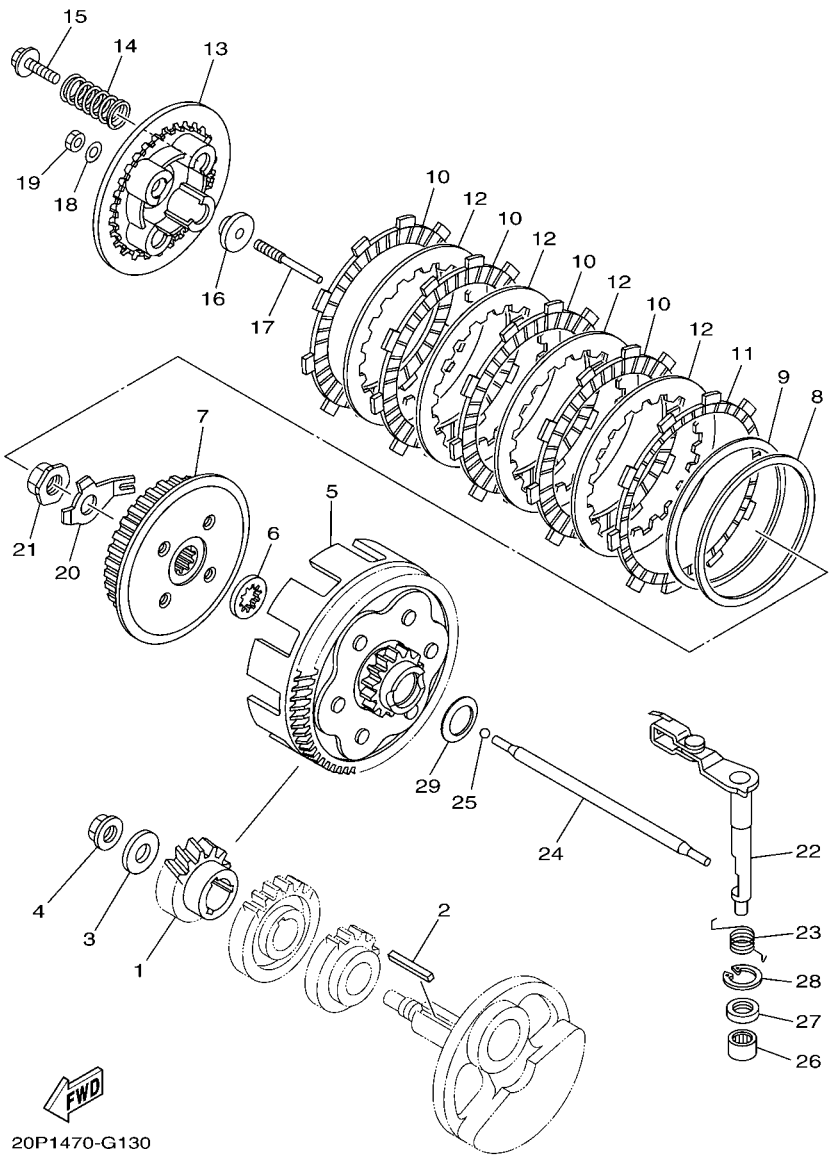

FIG. 13 EMBRAGUE CLUTCH

REF. Nº	CODIGO Nº PART NO.	DESCRIPCION DESCRIPTION	54C1					OBSERVACIONES REMARKS
1	3C1–E6111–00	ENGRANAJE TRACC.PRIMARIA GEAR, PRIMARY DRIVE	1					
2	3C1–16193–00	CHAVETA DE AGUJA KEY, FEATHER	1					
3	90201–12019	ARANDELA PLANA WASHER, PLATE	1					
4	90179–12802	TUERCA NUT	1					
5	3C1–E6150–00	CAMPANA DE EMBRAGUE PRIMARY DRIVEN GEAR COMP.	1					
6	3C1–E6154–00	ARANDELA, DE EMPUJE 1 PLATE, THRUST 1	1					
7	3C1–E6371–00	CUBO, DE EMBRAGUE BOSS, CLUTCH	1					
8	3C1–E6384–00	PLACA DE ASIENTO PLATE, SEAT	1					
9	3C1–E6383–00	RESORTE DE COPA DE EMBRAGUE SPRING, CLUTCH BOSS	1					
10	3C1–E6307–00	PLACA DE FRICCION 3 PLATE, FRICTION 3	4					
11	20P–E6331–00	DISCO, DE FRICCION PLATE, FRICTION 2	1					
12	3C1–E6324–00	PLACA DE EMBRAGUE PLATE, CLUTCH 1	4					
13	3C1–E6351–00	PLATO DE PRESION PLATE, PRESSURE 1	1					
14	20P–E6333–00	RESORTE DE EMBRAGUE 1 SPRING, CLUTCH 1	4					
15	3C1–E6337–00	TORNILLO DE RESORTE SCREW, SPRING	4					
16	3C1–E6358–00	PLACA DE EMPUJE PLATE, PUSH	1					
17	20P–E6356–00	VARILLA DE EMPUJE 1 ROD, PUSH 1	1					
18	3C1–E6144–00	ARANDELA WASHER	1					
19	3C1–E6344–00	TUERCA DE AJUSTE NUT, ADJUSTING	1					
20	3C1–E6135–00	ARANDELA DE CIERRE WASHER, LOCK	1					
21	90179–14001	TUERCA NUT	1					
22	3C1–16380–01	LEVA DE EMPUJE COMPLETA PUSH LEVER ASSY	1					
23	3C1–E6345–00	RESORTE DE RETORNO SPRING, RETURN	1					
24	3C1–16357–02	VARILLA DE EMPUJE 2 ROD, PUSH 2	1					
25	93503–16048	ESFERA BALL	1					
26	93315–112Y8	COJINETE DE RODILLOS BEARING	1					
27	93102–12862	SELLO ACEITE OIL SEAL	1					

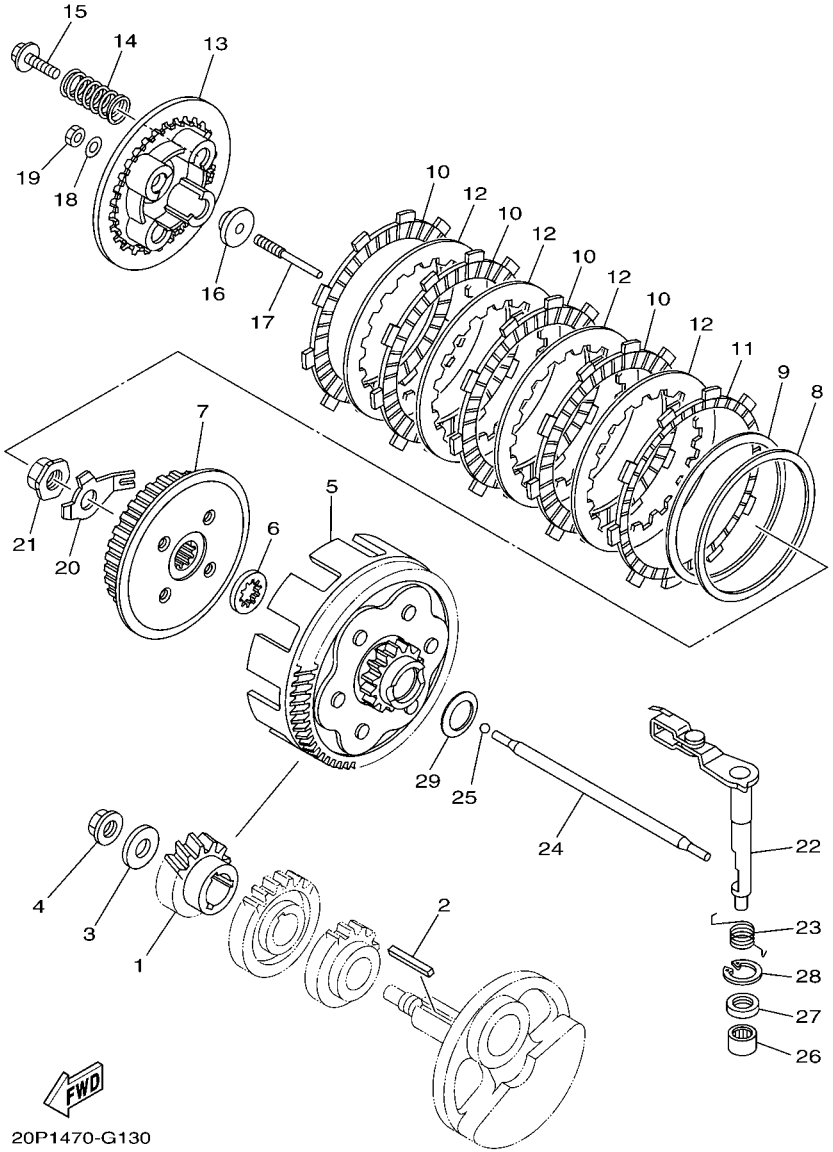

FIG. 13 EMBRAGUE CLUTCH

REF. Nº	CODIGO Nº PART NO.	DESCRIPCION DESCRIPTION	54C1					OBSERVACIONES REMARKS
28	99009–20500	PRESILLA REDONDA CIRCLIP	1					
29	90208–20003	ARANDELA DE RESORTE CONICO WASHER, CONICAL SPRING	1					

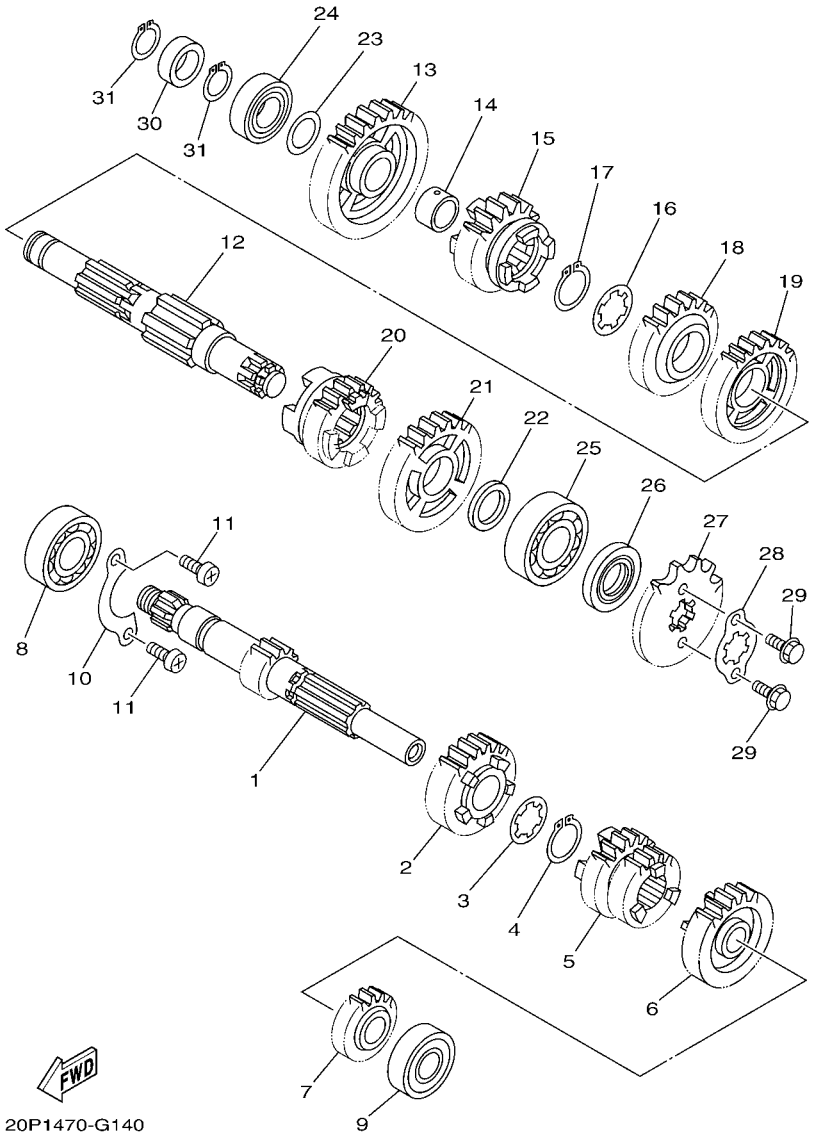

FIG. 14 TRANSMISION — TRANSMISSION

REF. Nº	CODIGO Nº PART NO.	DESCRIPCION DESCRIPTION	54C1					OBSERVACIONES REMARKS
1	5D7–E7411–00	EJE PRIMARIO (12T) AXLE, MAIN (12T)	1					
2	3C1–E7151–00	ENGRANAJE PINON DE 5TA (23T) GEAR, 5TH PINION (23T)	1					
3	90209–17285	ARANDELA DE SEPARACION WASHER	1					
4	93410–20038	SEGURO CIRCLIP	1					
5	5D7–E7131–00	ENGRANAJE PINON DE 3RA(22/21T) GEAR, 3RD PINION (22T/21T)	1					
6	5D7–E7161–00	ENGRANAJE PINON 6TA (25T) GEAR, 6TH PINION (25T)	1					
7	3C1–E7121–00	ENGRANAJE DE PINON DE 2DA(16T) GEAR, 2ND PINION (16T)	1					
8	93306–004XR	COJINETE BEARING	1					
9	93306–252YL	COJINETE BEARING	1					
10	3C1–E7471–00	PLACA, DE CUBIERTA PLATE, COVER	1					
11	98517–06012	TORNILLO DE CABEZA CON PLANA SCREW, PAN HEAD	2					
12	3C1–E7402–00	EJE DE TRACCION COMPLETO DRIVE AXLE ASSY	1					
13	3C1–E7211–00	ENGRANAJE RUEDA DE 1 RA (34T) GEAR, 1ST WHEEL (34T)	1					
14	90387–17804	ESPACIADOR COLLAR	1					
15	3C1–E7251–00	ENGRANAJE RUEDA DE 5TA (22T) GEAR, 5TH WHEEL (22T)	1					
16	90209–18208	ARANDELA DE SEPARACION WASHER	1					
17	93410–22039	SEGURO CIRCLIP	1					
18	3C1–E7241–00	ENGRANAJE DE RUEDA 4TA (24T) GEAR, 4TH WHEEL (24T)	1					
19	3C1–E7231–00	ENGRANAJE RUEDA DE 3RA (30T) GEAR, 3RD WHEEL (30T)	1					
20	5D7–E7261–00	ENGRANAJE RUEDA DE 6TA (25T) GEAR, 6TH WHEEL (25T)	1					
21	3C1–E7221–00	ENGRANAJE RUEDA DE 2DA (30T) GEAR, 2ND WHEEL (30T)	1					
22	90201–20814	ARANDELA PLANA WASHER, PLATE	1					
23	90201–173F4	ARANDELA PLANA WASHER, PLATE	1					
24	93306–003Y7	COJINETE BEARING	1					
25	93306–204YL	COJINETE BEARING	1					
26	93102–20892	SELLO ACEITE OIL SEAL	1					
27	93822–14815	CORONA (14T) SPROCKET, DRIVE (14T)	1					

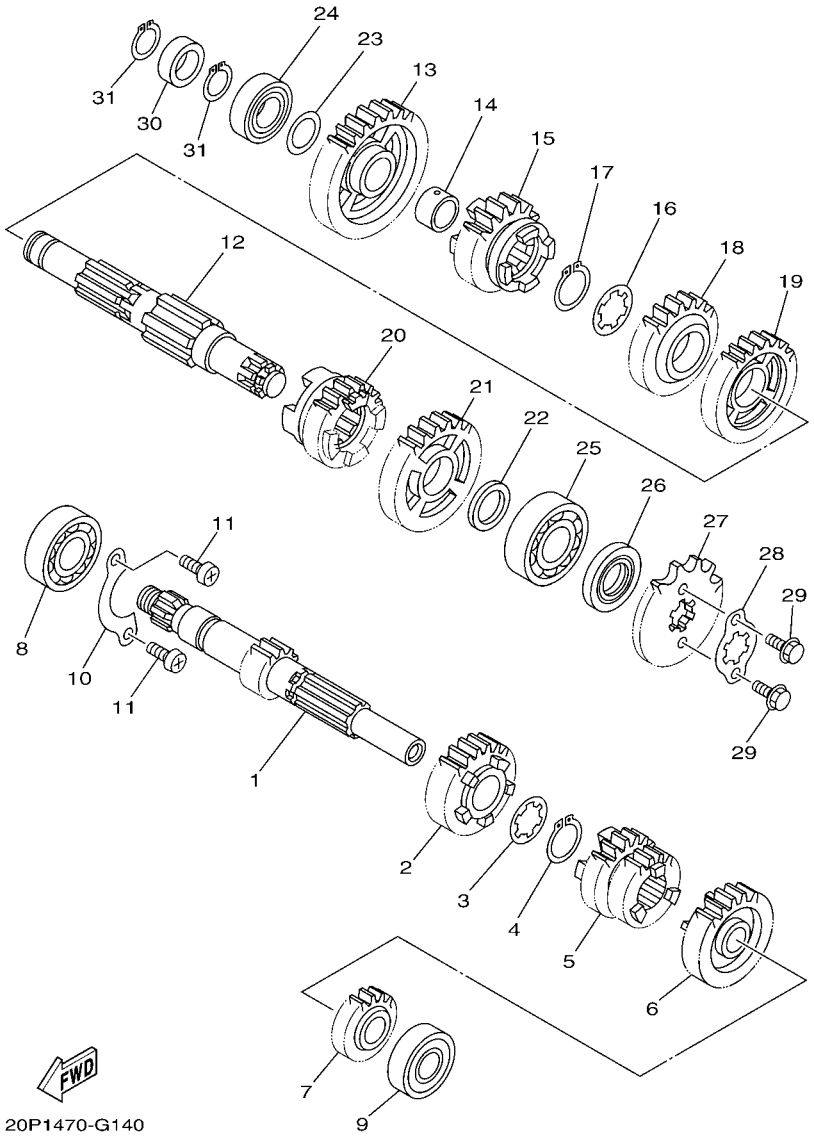

FIG. 14 TRANSMISION — TRANSMISSION

REF. Nº	CODIGO Nº PART NO.	DESCRIPCION DESCRIPTION	54C1					OBSERVACIONES REMARKS
28	3C1–E7456–00	SOPORTE DE CORONA HOLDER, SPROCKET	1					
29	95027–06010	PERNO, DE BRIDA BOLT, FLANGE	2					
30	20P–E5666–00	SEPARADOR SPACER	1					
31	99009–17400	PRESILLA REDONDA CIRCLIP	2					

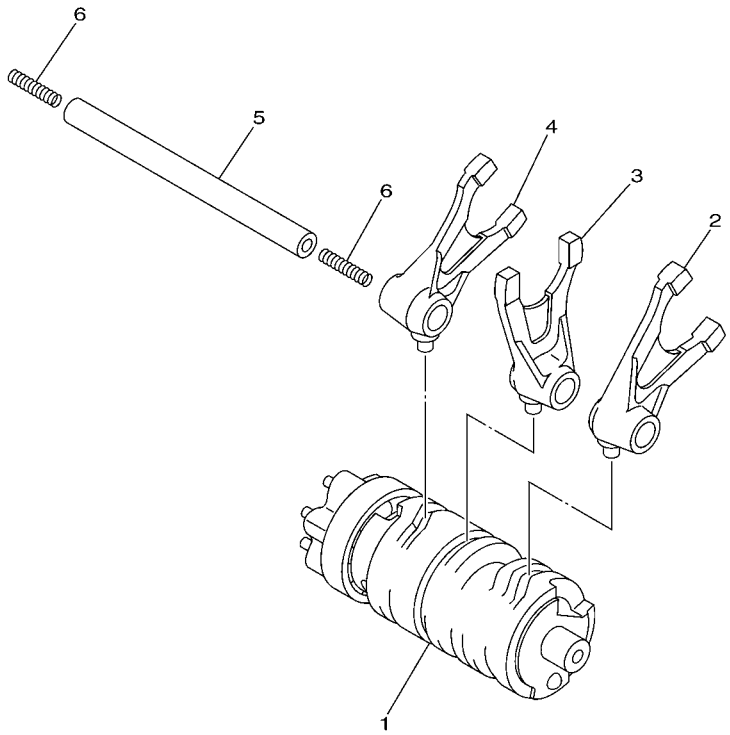

3C11460-F160

FIG. 15 LEVA DE CAMBIO & HORQUILLA SHIFT CAM & FORK

REF. Nº	CODIGO Nº PART NO.	DESCRIPCION DESCRIPTION	54C1					OBSERVACIONES REMARKS
1	5D7–E8540–00	LEVA DEL CAMBIO COMPLETA SHIFT CAM ASSY	1					
2	3C1–E8511–00	HORQUILLA DEL CAMBIO 1 FORK, SHIFT 1	1					
3	3C1–E8512–00	HORQUILLA DEL CAMBIO 2 FORK, SHIFT 2	1					
4	3C1–E8513–00	HORQUILLA DEL CAMBIO 3 FORK, SHIFT 3	1					
5	3C1–E8531–00	BARRA GUIA HORQ. CAMBIO 1 BAR, SHIFT FORK GUIDE 1	1					
6	90501–06800	RESORTE DE COMPRESION SPRING, COMPRESSION	2					

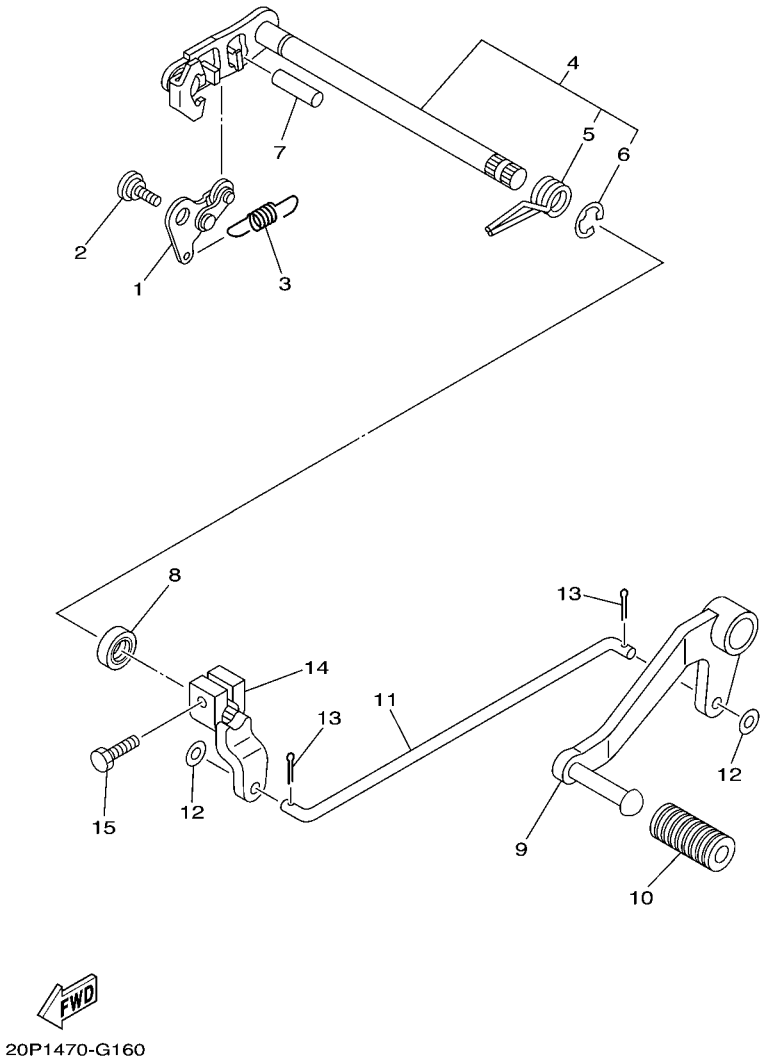

FIG. 16 EJE DE CAMBIO & PEDAL SHIFT SHAFT

REF. Nº	CODIGO Nº PART NO.	DESCRIPCION DESCRIPTION	54C1					OBSERVACIONES REMARKS
1	3C1–E8140–00	PALANCA DE TOPE COMPLETA STOPPER LEVER ASSY	1					
2	3C1–E8119–00	PERNO BOLT, SHIFT	1					
3	3C1–E8337–00	RESORTE SPRING	1					
4	3C1–E8101–00	EJE SELECTOR COMPLETO SHIFT SHAFT ASSY	1					
5	90508–32837	.RESORTE DE TORSION .SPRING, TORSION	1					
6	99001–10600	.PRESILLA REDONDA .CIRCLIP	1					
7	93608–30839	PASADOR DE CLAVIJA PIN, DOWEL	1					
8	93102–12891	SELLO ACEITE OIL SEAL	1					
9	20P–E8111–00	PEDAL DEL CAMBIO PEDAL, SHIFT	1					
10	20P–E8113–00	FUNDA DEL PEDAL DEL CAMBIO COVER, SHIFT PEDAL	1					
11	20P–E8115–00	VARILLA DEL CAMBIO ROD, SHIFT	1					
12	92907–06200	ARANDELA WASHER	2					
13	91401–20012	CHAVETA PIN, COTTER	2					
14	20P–E8112–00	BRAZO DEL CAMBIO ARM, SHIFT	1					
15	97024–06020	PERNO BOLT	1					

FIG. 17 CUADRO FRAME

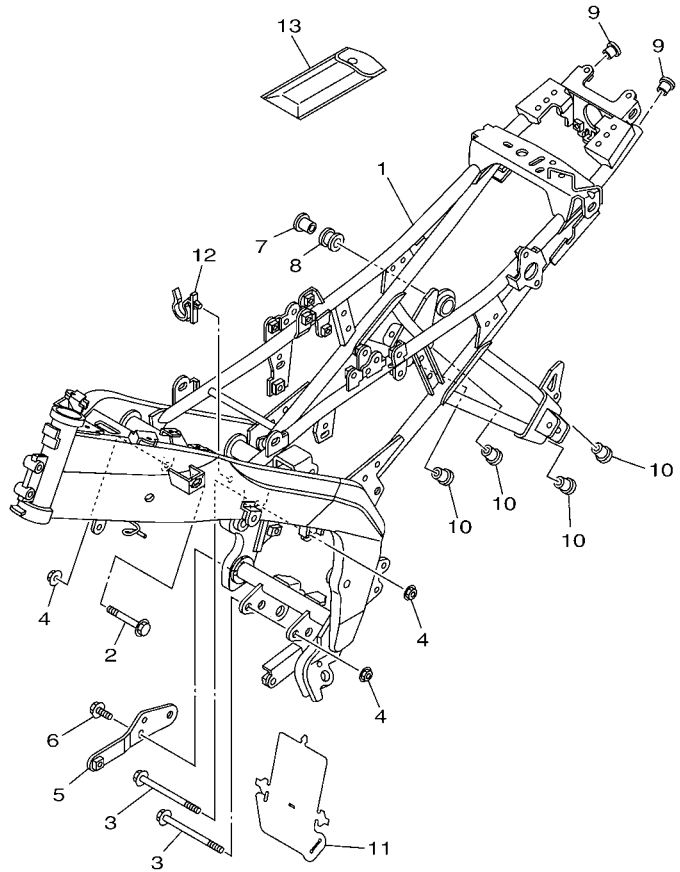

54C1261-H170

REF. Nº	CODIGO Nº PART NO.	DESCRIPCION DESCRIPTION	54C1					OBSERVACIONES REMARKS
1	20P–F1110–00	ARMAZON COMPLETO FRAME COMP.	1					
2	90105–10323	TORNILLO BOLT, FLANGE	1					
3	90105–10123	TORNILLO BOLT, FLANGE	2					
4	90179–10247	TUERCA NUT	3					
5	20P–F8284–00	MENSULA INFERIOR BRACKET, UNDER	1					
6	95817–08016	TORNILLO BOLT, FLANGE	2					
7	90387–08812	ESPACIADOR COLLAR	1					
8	20P–E4747–00	AMORTIGUADOR DE SILENCIADOR DAMPER, MUFFLER	1					
9	90338–18122	TAPON PLUG	2					
10	90338–16148	TAPON PLUG	4					
11	20P–F2327–00	GUARDAFANGO 1 MUD GUARD 1	1					
12	20P–F1338–00	GRAMPA CLAMP	1					
13	20P–F8100–00	JUEGO DE HERRAMIENTAS TOOL KIT	1					

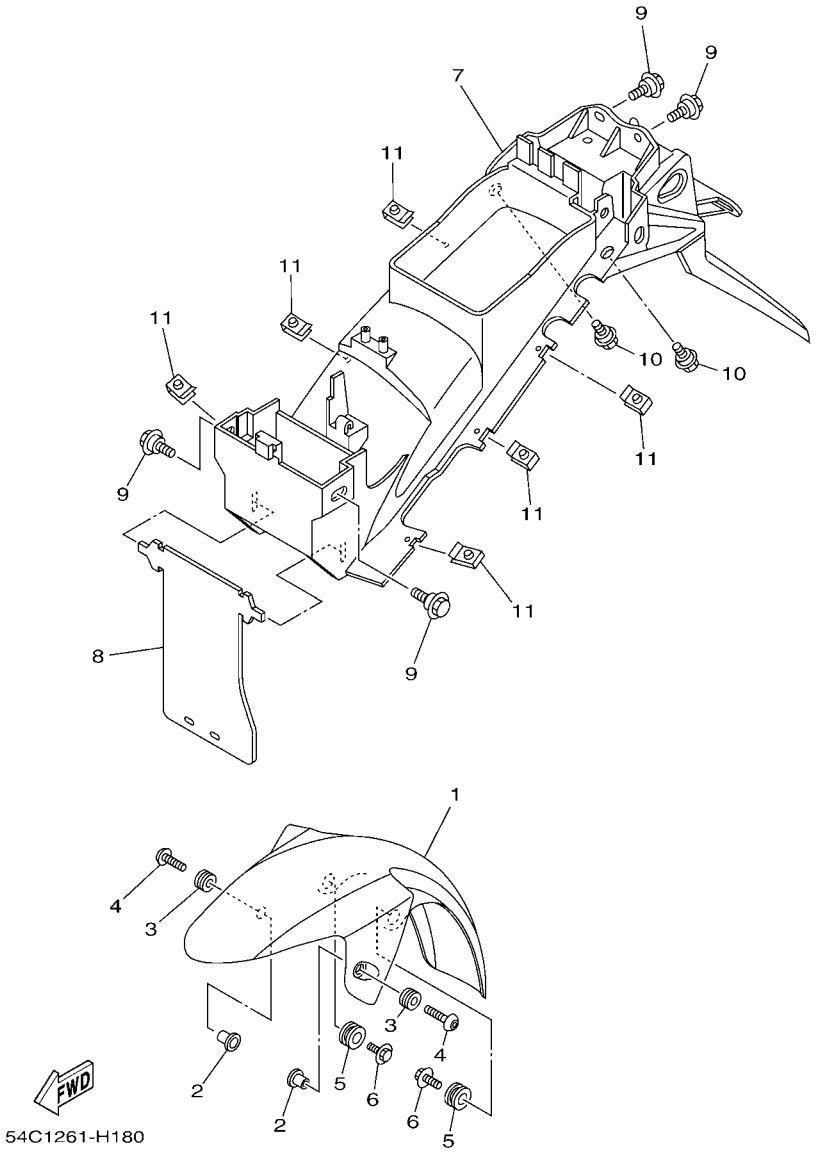

FIG. 18 GUARDABARRO FENDER

REF. Nº	CODIGO Nº PART NO.	DESCRIPCION DESCRIPTION	54C1					OBSERVACIONES REMARKS
1	20P–F1511–00–P0	GUARDABARRO DELANTERO FENDER, FRONT	1					UR PARA DPBMY UR FOR DPBMY
	20P–F1511–00–P1	GUARDABARRO DELANTERO FENDER, FRONT	1					UR PARA SMX UR FOR SMX
	20P–F1511–00–P2	GUARDABARRO DELANTERO FENDER, FRONT	1					UR PARA DRMK UR FOR DRMK
2	90387–068C8	ESPACIADOR COLLAR	2					
3	90480–12805	TAPON GROMMET	2					
4	90111–06117	TORNILLO BOLT,HEX. SOCKET BUTTON	2					
5	90480–18859	TAPON GROMMET	2					
6	90119–06233	TORNILLO CON ARANDELA BOLT, WITH WASHER	2					
7	20P–F1611–00	GUARDABARRO TRASERO FENDER, REAR	1					
8	20P–F1621–00	CHARNELA FLAP	1					
9	90109–063F1	PERNO BOLT	4					
10	90109–06183	PERNO BOLT	2					
11	90183–05042	TUERCA DE RESORTE NUT, SPRING	6					

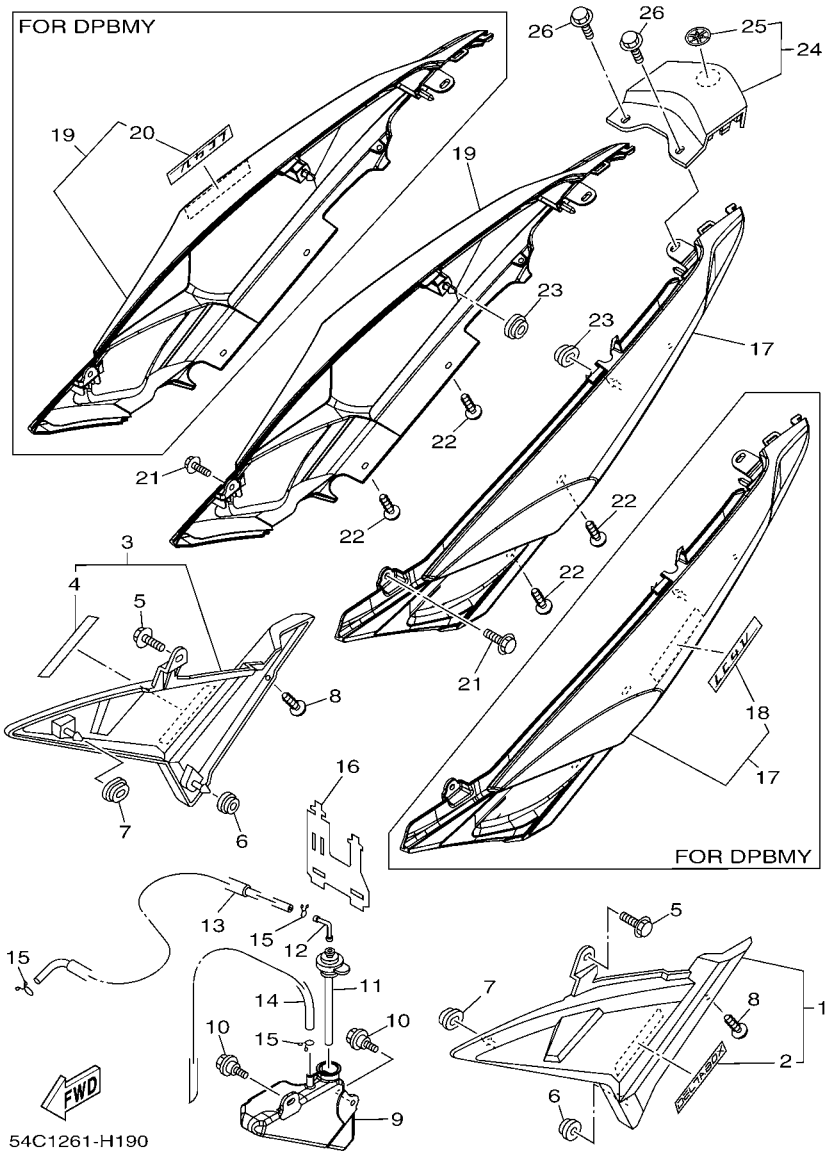

FIG. 19 CUBIERTA LATERAL SIDE COVER

REF. Nº	CODIGO Nº PART NO.	DESCRIPCION DESCRIPTION	54C1					OBSERVACIONES REMARKS
1	20P–XF171–00	JUEGO DE GRAFICOS 1 COVER, SIDE 1	1					UR PARA DPBMY UR FOR DPBMY
	20P–XF171–10	JUEGO DE GRAFICOS 1 COVER, SIDE 1	1					UR PARA SMX UR FOR SMX
	20P–XF171–20	JUEGO DE GRAFICOS 1 COVER, SIDE 1	1					UR PARA DRMK UR FOR DRMK
2	20P–F173E–00	.GRAFICO 1 .GRAPHIC, 1	1					UR PARA DPBMY UR FOR DPBMY
	20P–F173E–10	.GRAFICO 1 .GRAPHIC, 1	1					UR PARA SMX UR FOR SMX
	20P–F173E–20	.GRAFICO 1 .GRAPHIC, 1	1					UR PARA DRMK UR FOR DRMK
3	20P–XF172–00	TAPA LTERAL 2 COVER, SIDE 2	1					UR PARA DPBMY UR FOR DPBMY
	20P–XF172–10	TAPA LTERAL 2 COVER, SIDE 2	1					UR PARA SMX UR FOR SMX
	20P–XF172–20	TAPA LTERAL 2 COVER, SIDE 2	1					UR PARA DRMK UR FOR DRMK
4	20P–F173E–00	.GRAFICO 1 .GRAPHIC, 1	1					UR PARA DPBMY UR FOR DPBMY
	20P–F173E–10	.GRAFICO 1 .GRAPHIC, 1	1					UR PARA SMX UR FOR SMX
	20P–F173E–20	.GRAFICO 1 .GRAPHIC, 1	1					UR PARA DRMK UR FOR DRMK
5	90119–06044	TORNILLO CON ARANDELA BOLT, WITH WASHER	2					
6	90480–13567	TAPON GROMMET	2					
7	90480–01558	TAPON GROMMET	2					
8	97707–50014	TORNILLO SCREW, TRUSS HEAD TAPPING	2					
9	20P–F1871–00	TANQUE DE RECUPERACION TANK, RECOVERY	1					
10	90109–06183	PERNO BOLT	2					
11	20P–F1875–00	TAPA CAP	1					
12	20P–F1828–00	CODO ELBOW	1					
13	90445–08831	TUBO HOSE	1					
14	90445–08832	TUBO HOSE	1					
15	90467–08003	PRESILLA CLIP	3					
16	20P–F1823–00	GRAMPA DE MANGUERA CLAMP, HOSE	1					
17	20P–XF173–00–P0	TAPA LATERAL 3 COVER, SIDE 3	1					UR PARA DPBMY UR FOR DPBMY
	20P–F1731–00–P1	TAPA LATERAL 3 COVER, SIDE 3	1					UR PARA SMX UR FOR SMX
	20P–F1731–00–P2	TAPA LATERAL 3 COVER, SIDE 3	1					UR PARA DRMK UR FOR DRMK

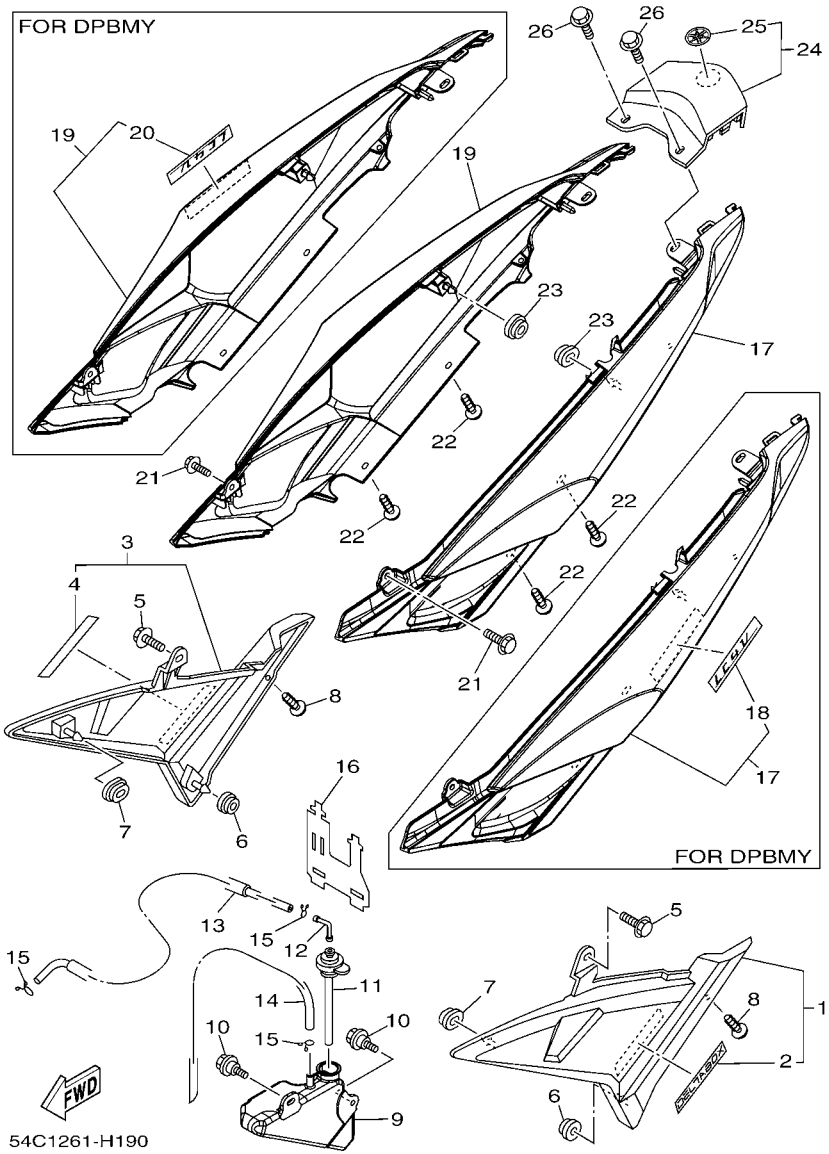

FIG. 19 CUBIERTA LATERAL SIDE COVER

REF. Nº	CODIGO Nº PART NO.	DESCRIPCION DESCRIPTION	54C1					OBSERVACIONES REMARKS
18	20P–F174G–00	.GRAFICO 3 .GRAPHIC, 3	1					PARA DPBMY FOR DPBMY
19	20P–XF174–00–P0	CUBIERTA LATERAL 4 COVER, SIDE 4	1					UR PARA DPBMY UR FOR DPBMY
	20P–F1741–00–P1	CUBIERTA LATERAL 4 COVER, SIDE 4	1					UR PARA SMX UR FOR SMX
	20P–F1741–00–P2	CUBIERTA LATERAL 4 COVER, SIDE 4	1					UR PARA DRMK UR FOR DRMK
20	20P–F174G–00	.GRAFICO 3 .GRAPHIC, 3	1					PARA DPBMY FOR DPBMY
21	90119–06044	TORNILLO CON ARANDELA BOLT, WITH WASHER	2					
22	97707–50014	TORNILLO SCREW, TRUSS HEAD TAPPING	4					
23	90480–01558	TAPON GROMMET	2					
24	20P–XF171–00–P0	CUBIERTA LATERAL 5 COVER, SIDE 5	1					UR PARA DPBMY UR FOR DPBMY
	20P–XF171–00–P1	CUBIERTA LATERAL 5 COVER, SIDE 5	1					UR PARA SMX UR FOR SMX
	20P–XF171–20–P2	CUBIERTA LATERAL 5 COVER, SIDE 5	1					UR PARA DRMK UR FOR DRMK
25	20P–F836B–00	.MARCA .TUNING FORK MARK	1					
26	90119–06044	TORNILLO CON ARANDELA BOLT, WITH WASHER	2					

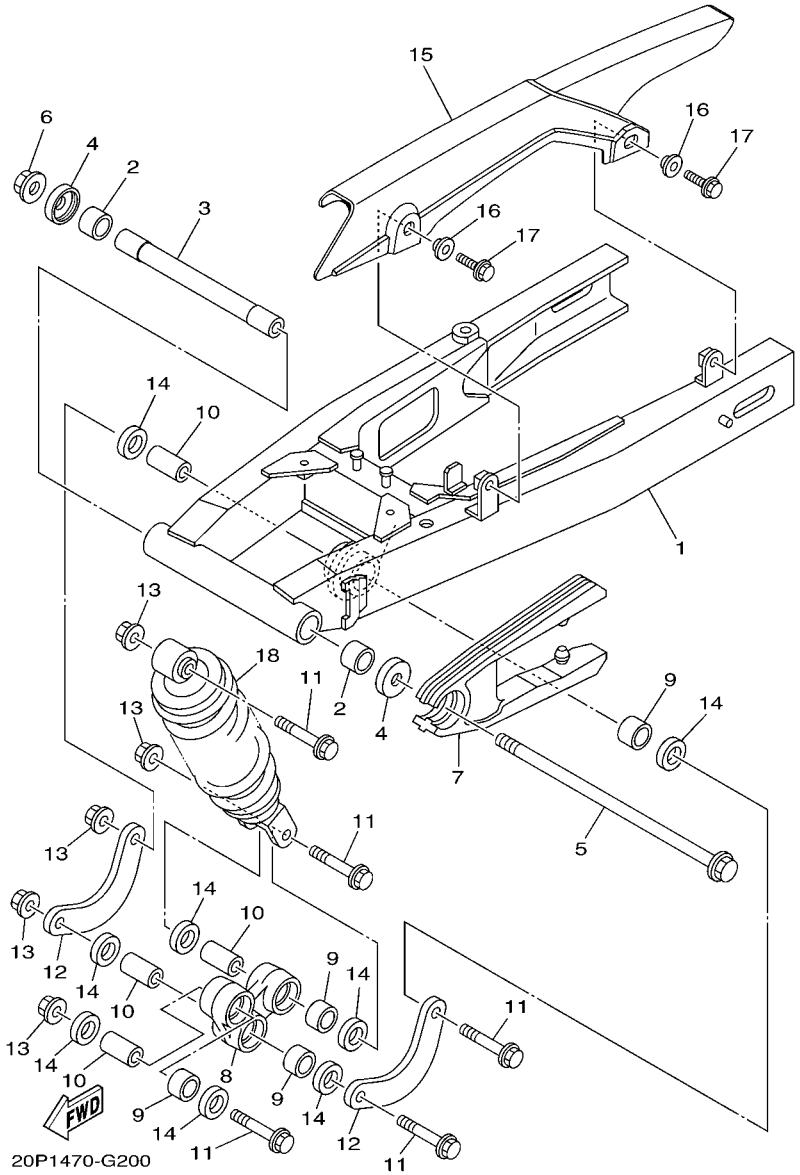

FIG. 20 BRAZO TRASERO & SUSPENSION REAR ARM & SUSPENSION

REF. Nº	CODIGO Nº PART NO.	DESCRIPCION DESCRIPTION	54C1					OBSERVACIONES REMARKS
1	20P–F2110–00	BRAZO TRASERO COMPLETO REAR ARM COMP.	1					
2	93317–21717	COJINETE BEARING	2					
3	20P–F2184–00	BUJE BUSH	1					
4	20P–F2129–00	TAPA DE EMPUJE 2 COVER, THRUST 2	2					
5	20P–F2141–00	EJE DEL BARCULANTE SHAFT, PIVOT	1					
6	95707–12500	TUERCA DE BRIDA NUT, FLANGE	1					
7	20P–F2151–00	SELLO DE GUARDA SEAL, GUARD	1					
8	20P–F217A–00	BRAZO REEURIO ARM, RELAY	1					
9	93315–31758	COJINETE DE RODILLOS BEARING	4					
10	90387–10814	ESPACIADOR COLLAR	4					
11	90105–10311	TORNILLO BOLT, FLANGE	5					
12	20P–F217F–00	BIELA COMPLETA 1 ROD, CONNECTING 1	2					
13	90179–10023	TUERCA NUT	5					
14	93106–17802	SELLO ACEITE OIL SEAL	8					
15	20P–F2311–00	CABRECADENA CASE, CHAIN	1					
16	90387–07819	ESPACIADOR COLLAR	2					
17	95827–06014	TORNILLO BOLT, FLANGE	2					
18	20P–F2210–00	AMORTIGUADOR TRASERO COMPLETO SHOCK ABSORBER ASSY, REAR	1					

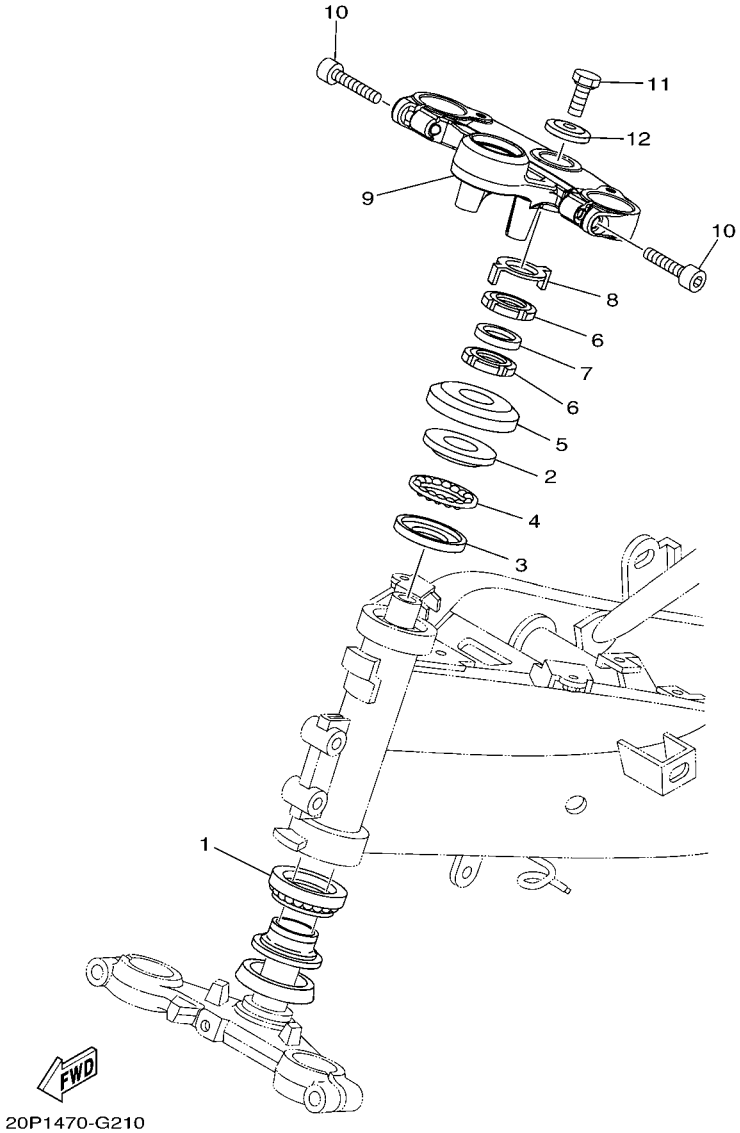

FIG. 21 DIRECCION STEERING

REF. Nº	CODIGO Nº PART NO.	DESCRIPCION DESCRIPTION	54C1					OBSERVACIONES REMARKS
1	5LK–23873–01	COJINETE SUP.DIRECCION BEARING, STEERING UPPER	1					
2	183–23411–00	PISTA DE BOLAS 1 RACE, BALL 1	1					
3	183–23412–00	PISTA DE BOLAS 2 RACE, BALL 2	1					
4	5TL–2341E–00	RETEN DE COJINETE RETAINER, BALL BEARING	1					
5	20P–F3416–00	CUBIERTA DE BASE DE BOLA 2 COVER, BALL RACE 2	1					
6	90179–25615	TUERCA NUT	2					
7	90202–26142	ARANDELA DE PLANA WASHER, PLATE	1					
8	20P–F3418–00	ARANDELA ESPECIAL WASHER, SPECIAL	1					
9	20P–F3435–00	PLATINA SUPERIOR CROWN, HANDLE	1					
10	91317–08030	PERNO BOLT	2					
11	90105–10006	TORNILLO BOLT, FLANGE	1					
12	90209–10020	ARANDELA DE SEPARACION WASHER	1					

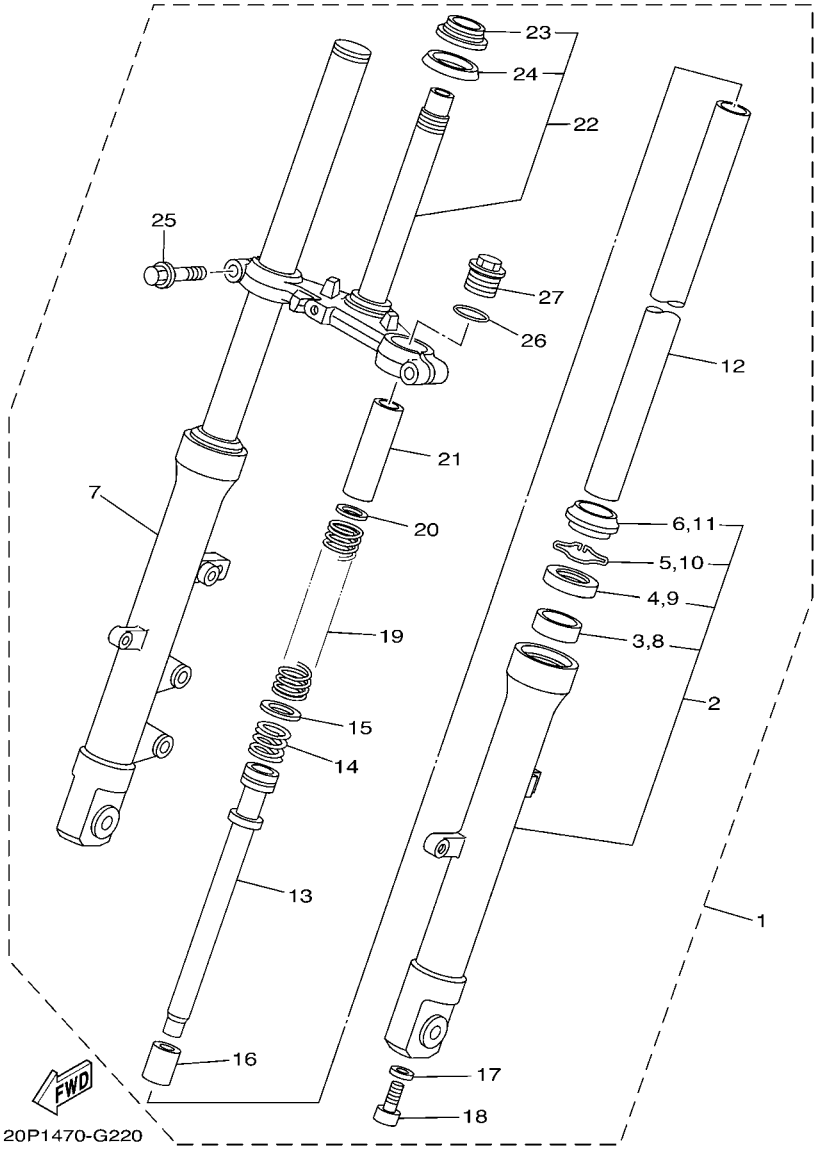

FIG. 22 HORQUILLA DELANTERA FRONT FORK

REF. Nº	CODIGO Nº PART NO.	DESCRIPCION DESCRIPTION	54C1					OBSERVACIONES REMARKS
1	20P–F3100–00	HORQUILLA DELANTERA COMPLETA FRONT FORK ASSY	1					
2	20P–F3126–00	.TUBO EXTERIOR (IZQUIERDO) .TUBE, OUTER (LEFT)	1					
3	20P–F3125–00	..METAL CORREDIZO 1 ..METAL, SLIDE 1	1					
4	20P–F3145–00	..RETEN DE ACEITE ..OIL SEAL	1					
5	20P–F3156–00	..ANILLO DE ENGANCHE ..RING, SNAP	1					
6	20P–F3144–00	..GUARDAPOLVO ..SEAL, DUST	1					
7	20P–F3136–00	.TUBO EXTERIOR .TUBE, OUTER (RIGHT)	1					
8	20P–F3125–00	..METAL CORREDIZO 1 ..METAL, SLIDE 1	1					
9	20P–F3145–00	..RETEN DE ACEITE ..OIL SEAL	1					
10	20P–F3156–00	..ANILLO DE ENGANCHE ..RING, SNAP	1					
11	20P–F3144–00	..GUARDAPOLVO ..SEAL, DUST	1					
12	20P–F3110–00	.TUBO INTERIOR COMPLETO 1 .INNER TUBE COMP.1	2					
13	20P–F3170–00	.CILINDRO COMPL DE HORQ DELANT .CYLINDER COMP., FRONT FORK	2					
14	20P–F3151–00	.RESORTE DE REBOTE .SPRING, REBOUND	2					
15	20P–F3157–00	.ANILLO DEL PISTON .RING, PISTON	2					
16	20P–F3173–00	.VASTAGO AHUSADO .SPINDLE, TAPER	2					
17	20P–F3158–00	.EMPAQUE .GASKET	2					
18	20P–F3181–00	.TORNILLO CABEZAHEXAGONAL .BOLT, HEXAGON SOCKET HEAD	2					
19	20P–F3141–00	.RESORTE HORQUILLA DELANT. .SPRING, FRONT FORK	2					
20	20P–F3149–00	.ARANDELA DE RESORTE SUPERIOR .WASHER, SPRING UPPER	2					
21	20P–F3118–00	.SEPARADOR .SPACER	2					
22	20P–F3340–00	.PLATINA INFERIOR COMPLETA .UNDER BRACKET COMP.	1					
23	5LK–23875–00	..COJINETE ..BEARING, STEERING LOWER	1					
24	164–23462–00	..SELLO PARA POLVO ..SEAL, DUST	1					
25	20P–F3346–00	.PERNO 1 .BOLT 1	2					
26	20P–F3114–00	.EMPAQUE .GASKET	2					
27	20P–F3111–00	.PERNO DE TAPA .BOLT, CAP	2					

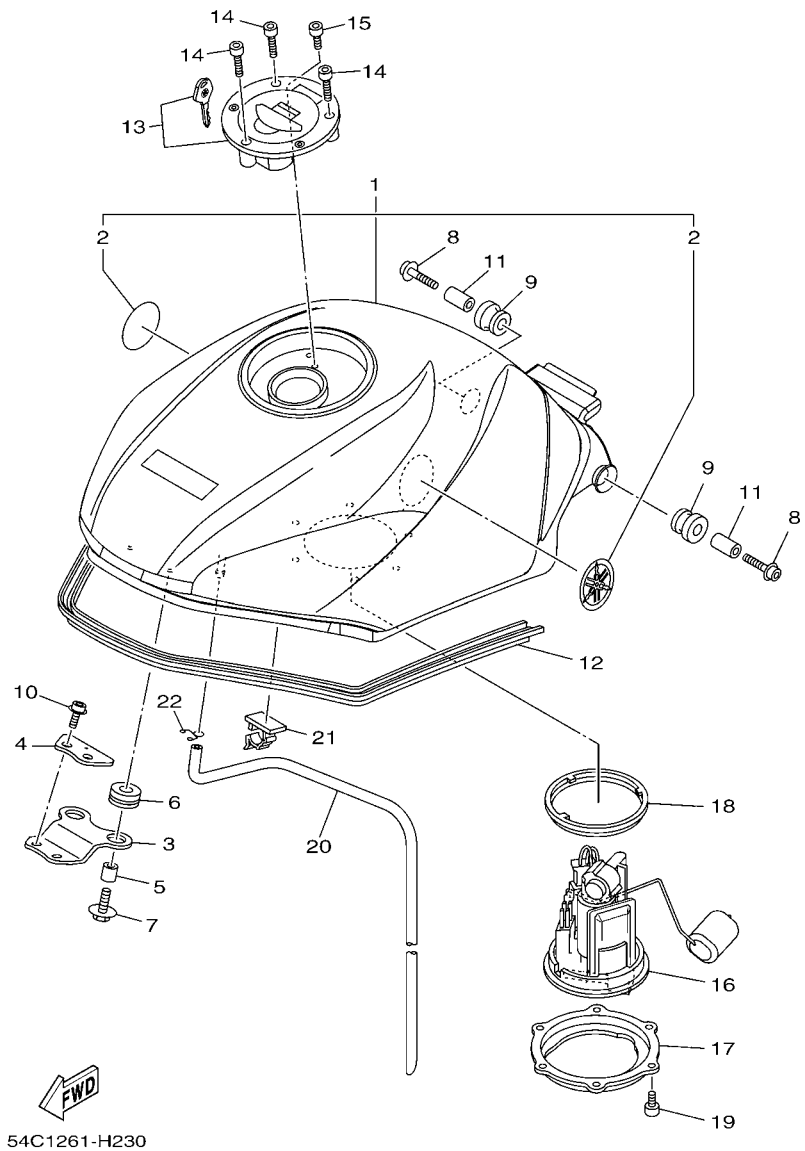

FIG. 23 DEPOSITO DE COMBUSTIBLE FUEL TANK

REF. Nº	CODIGO Nº PART NO.	DESCRIPCION DESCRIPTION	54C1					OBSERVACIONES REMARKS
1	54C–XF411–00–P0	DEPOSITO DE COMBUSTIBLE COMP. FUEL TANK COMP.	1					UR PARA DPBMY UR FOR DPBMY
	54C–XF411–10–P1	DEPOSITO DE COMBUSTIBLE COMP. FUEL TANK COMP.	1					UR PARA SMX UR FOR SMX
	54C–XF411–20–P2	DEPOSITO DE COMBUSTIBLE COMP. FUEL TANK COMP.	1					UR PARA DRMK UR FOR DRMK
2	5YY–F413B–00	.EMBLEMA .EMBLEM	2					
3	20P–F4191–00	SOPORTE DEPOSITO DE COMBUST.1 BRACKET, FUEL TANK 1	1					
4	20P–F411F–00	PLACA, ADITAMENTO PLATE, FITTING	1					
5	90387–06892	ESPACIADOR COLLAR	2					
6	90480–15483	TAPON GROMMET	2					
7	90119–06234	TORNILLO CON ARANDELA BOLT, WITH WASHER	2					
8	90110–06287	TORNILLO ALLEN BOLT, HEXAGON SOCKET HEAD	2					
9	90480–18549	TAPON GROMMET	2					
10	90110–06215	TORNILLO ALLEN BOLT, HEXAGON SOCKET HEAD	2					
11	90387–06890	ESPACIADOR COLLAR	2					
12	20P–F4188–00	MOLDURA DEPOSITO COMBUST. MOLD, FUEL TANK	1					
13	20P–WF461–00	TAPA DE DEPOSITO COMPLETO CAP ASSY WITH LOCK	1					
14	90110–05112	TORNILLO ALLEN BOLT, HEXAGON SOCKET HEAD	3					
15	91317–05010	PERNO BOLT	1					
16	3C1–E3907–00	BOMBA DE COMBUSTIBLE COMPLETA FUEL PUMP COMP.	1					
17	20P–F4491–00	SOPORTE BOMBA COMBUSTIBLE BRACKET, FUEL PUMP	1					
18	20P–F4486–00	ANILLO O O-RING	1					
19	91317–05010	PERNO BOLT	6					
20	20P–F4312–00	TUBO 2 PIPE 2	1					
21	90464–25160	BRIDA CLAMP	1					
22	90467–09006	PRESILLA CLIP	1					

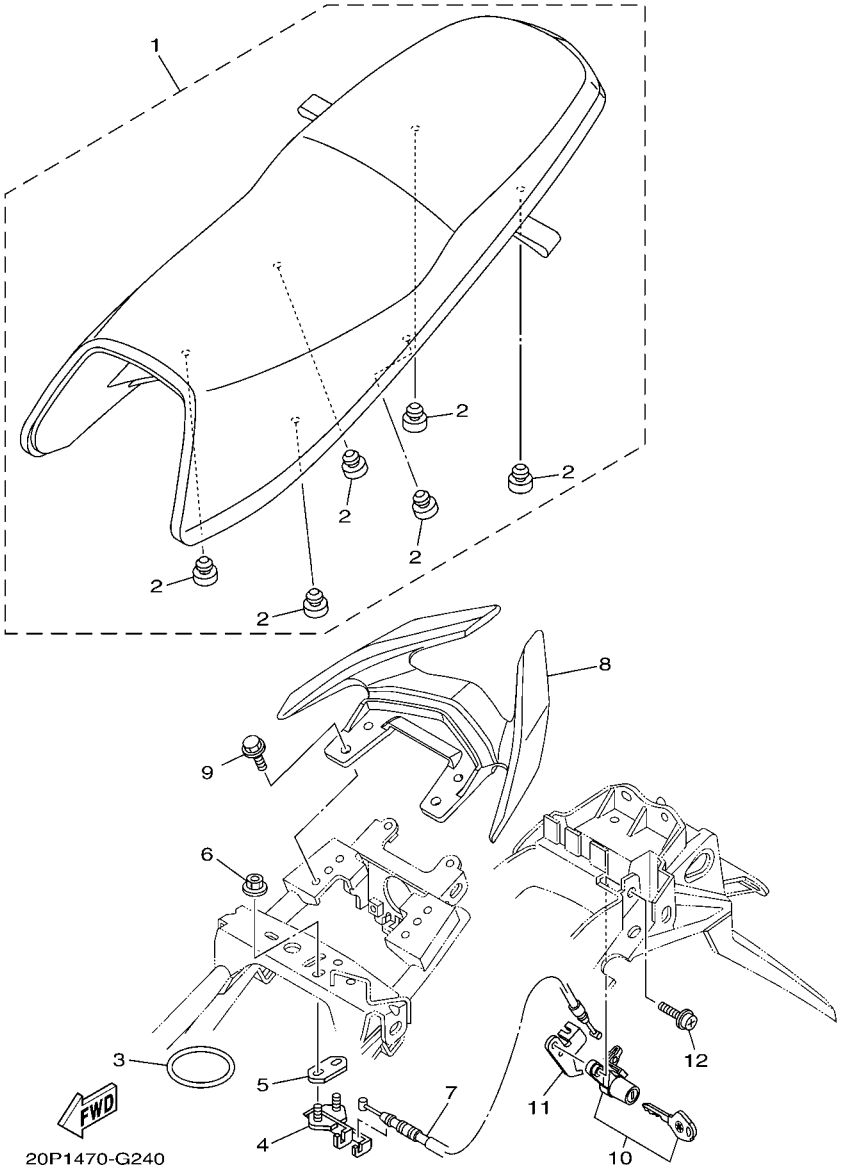

FIG. 24 ASIENTO SEAT

REF. Nº	CODIGO Nº PART NO.	DESCRIPCION DESCRIPTION	54C1					OBSERVACIONES REMARKS
1	20P–F4730–00	SILLIN DOBLE COMPLETO DOUBLE SEAT ASSY	1					
2	20P–F4741–00	.COJIN DE ASIENTO .PAD, SEAT	6					
3	20P–H2131–00	TIRANTE DE BATERIA BAND, BATTERY	1					
4	20P–F4780–00	CERRADURA SILLIN COMPLETO SEAT LOCK ASSY	1					
5	20P–F4792–00	PLACA PLATE	1					
6	95707–06500	TUERCA DE BRIDA NUT, FLANGE	2					
7	20P–F478E–00	CABLE CABLE, SEAT LOCK	1					
8	20P–F4773–00–P0	MANIJA DE ASIENTO HANDLE, SEAT	1					UR PARA DPBMY UR FOR DPBMY
	20P–F4773–00–P1	MANIJA DE ASIENTO HANDLE, SEAT	1					UR PARA SMX UR FOR SMX
	20P–F4773–00–P2	MANIJA DE ASIENTO HANDLE, SEAT	1					UR PARA DRMK UR FOR DRMK
9	95827–08020	TORNILLO BOLT, FLANGE	4					
10	20P–WF478–00	CUBIERTA DE ASIENTO SEAT LOCK WITH KEY	1					
11	20P–F117K–00	SOPORTE DE CERRADURA STAY, LOCK	1					
12	90159–06033	TORNILLO CON VALONA SCREW, WITH WASHER	1					

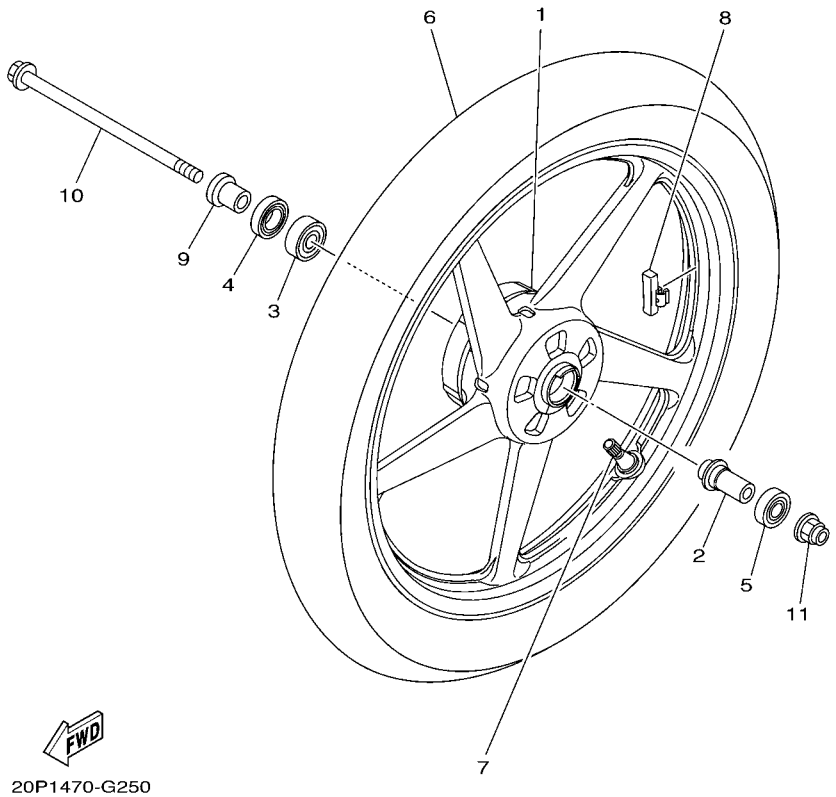

FIG. 25 RUEDA DELANTERA FRONT WHEEL

REF. Nº	CODIGO Nº PART NO.	DESCRIPCION DESCRIPTION	54C1					OBSERVACIONES REMARKS
1	20P–F5168–00	RUEDA FUNDIDA DELANTERA CAST WHEEL, FRONT	1					
2	20P–F510C–00	COLLAR COLLAR ASSY.	1					
3	93306–301XN	COJINETE BEARING	1					
4	93106–20823	SELLO ACEITE OIL SEAL	1					
5	93306–201X8	COJINETE BEARING	1					
6	94108–17831	NEUMATICO (80/90-17 M/C 44P) TIRE (80/90-17 M/C 44P)	1					MRF MRF
7	93900–00824	VALVULA VALVE, RIM TR413	1					
8	5MT–25398–00	BALANCEADOR DE RUEDA (10G) BALANCER, WHEEL (10G)	1					UN UN
	5MT–25398–10	BALANCEADOR DE RUEDA (20G) BALANCER, WHEEL (20G)	1					UN UN
	5MT–25398–20	BALANCEADOR DE RUEDA (30G) BALANCER, WHEEL (30G)	1					UN UN
9	20P–F5186–00	COLLAR DE RUEDA COLLAR, WHEEL	1					
10	20P–F5181–00	EJE DE LA RUEDA AXLE, WHEEL	1					
11	95607–12200	TUERCA DE AUTO-CIERRE NUT, SELF-LOCKING	1					

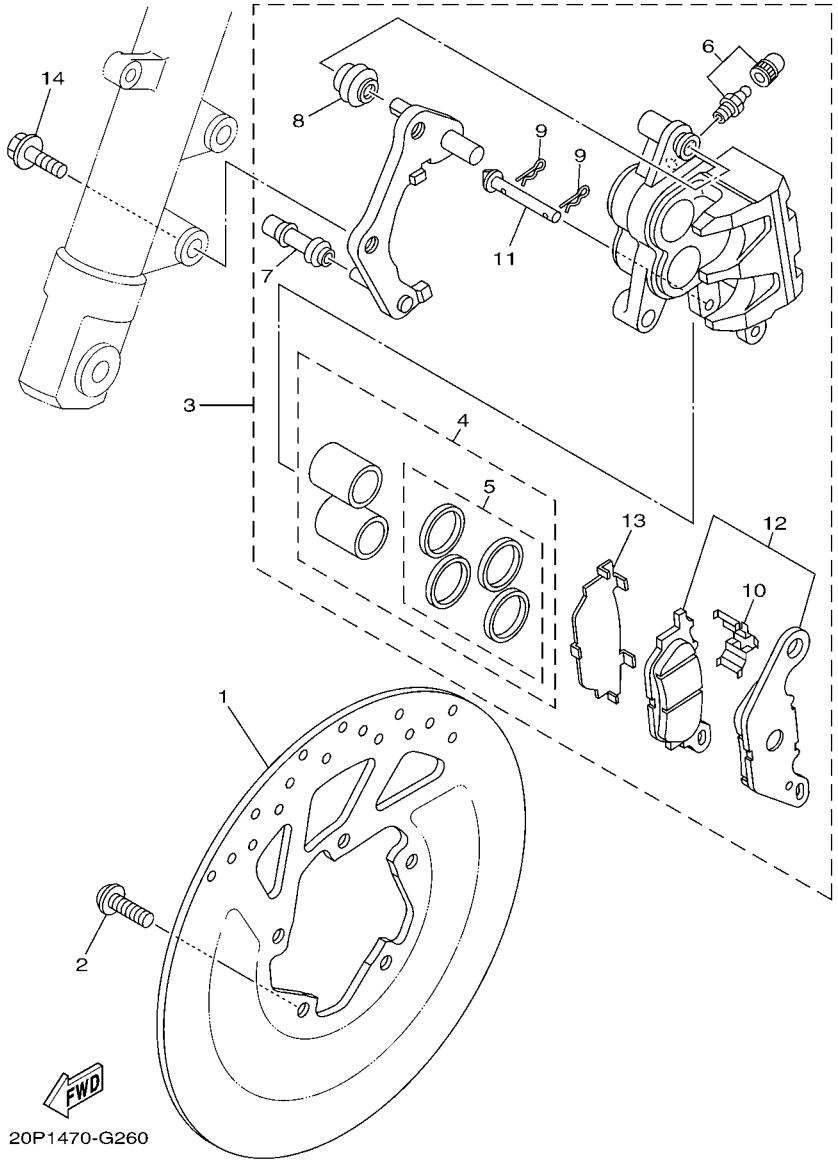

FIG. 26 CALIBRE FRENO DELANTERA FRONT BRAKE CALIPER

REF. Nº	CODIGO Nº PART NO.	DESCRIPCION DESCRIPTION	54C1					OBSERVACIONES REMARKS
1	20P–F582U–00	DISCO DE FRENO (DERECHO) DISK, BRAKE (RIGHT)	1					
2	90111–08057	TORNILLO BOLT,HEX. SOCKET BUTTON	5					
3	3C1–F580U–00	CALIBRE COMPLETO (DERECHO) CALIPER ASSY (RIGHT)	1					
4	3C1–W0057–00	.PISTON COMPLETO PINZA .PISTON ASSY, CALIPER	1					
5	3C1–W0047–00	..JUEGO DE RETENES DE PINZA ..CALIPER SEAL KIT	1					
6	5TL–W0048–00	.CJTO TORNILLO DE PURGA .BLEED SCREW KIT	1					
7	5YP–F5937–00	.FUNDA .BOOT 2	1					
8	5YP–F5917–00	.FUNDA DE CALIBRE .BOOT, CALIPER	1					
9	5YP–F5925–01	.PRESILLA .CLIP	2					
10	5YP–F5919–00	.SOPORTE DE PASTILLAS .SUPPORT, PAD	1					
11	5YP–F5924–00	.PASADOR .PIN, PAD	1					
12	4C9–W0045–00	.JUEGO DE COJIN DE FRENO .BRAKE PAD KIT	1					
13	5YP–F5939–00	.PRESILLA .CLIP, PAD	1					
14	90105–10082	TORNILLO BOLT, FLANGE	2					

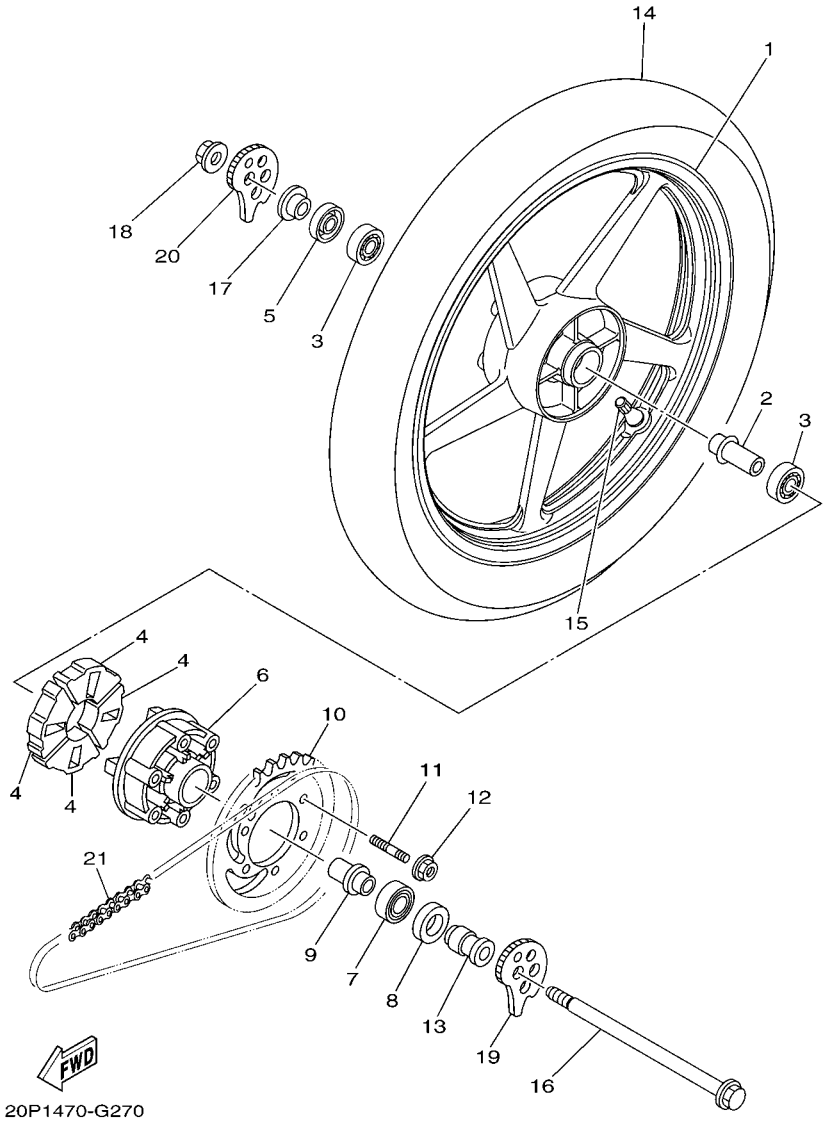

FIG. 27 RUEDA TRASERA REAR WHEEL

REF. Nº	CODIGO Nº PART NO.	DESCRIPCION DESCRIPTION	54C1					OBSERVACIONES REMARKS
1	20P–F5338–00	RUEDA FUNDIDA TRASERA CAST WHEEL, REAR	1					
2	20P–F530S–00	ASAMBLEA DE COLLAR COLLAR ASSY	1					
3	93306–252YH	COJINETE BEARING	2					
4	20P–F5364–00	AMORTIGUADOR DAMPER	4					
5	93106–22806	SELLO ACEITE OIL SEAL	1					
6	20P–F5366–00–33	EMBRAGUE DE MASA CLUTCH, HUB	1					YB YB
7	93306–054Y5	COJINETE BEARING	1					
8	93106–26801	SELLO ACEITE OIL SEAL	1					
9	20P–F5377–00	COLLAR DE RUEDA COLLAR, WHEEL	1					
10	20P–F5442–00	CORONA (42T) SPROCKET, DRIVEN (42T)	1					
11	90116–08552	ESPARRAGO BOLT, STUD	6					
12	95607–08200	TUERCA DE AUTO-CIERRE NUT, SELF-LOCKING	6					
13	20P–F5386–00	COLLAR EJE DE RUEDA DENTADA COLLAR, SPROCKET AXLE	1					
14	94110–17803	NEUMATICO (100/80-17 M/C 52P) TIRE (100/80-17 M/C 52P)	1					MRF MRF
15	93900–00824	VALVULA VALVE, RIM TR413	1					
16	20P–F5381–00	EJE DE RUEDA AXLE, WHEEL	1					
17	20P–F5383–00	COLLAR DE RUEDA COLLAR, WHEEL	1					
18	95607–14200	TUERCA DE AUTO-CIERRE NUT, SELF-LOCKING	1					
19	20P–F5388–00	TIRADOR DE CADENA 1 PULLER, CHAIN 1	1					
20	20P–F5389–00	TIRADOR DE CADENA 2 PULLER, CHAIN 2	1					
21	94568–B8120	CADENA (DID428VI3-120LE) CHAIN (DID428VI3-120LE)	1					

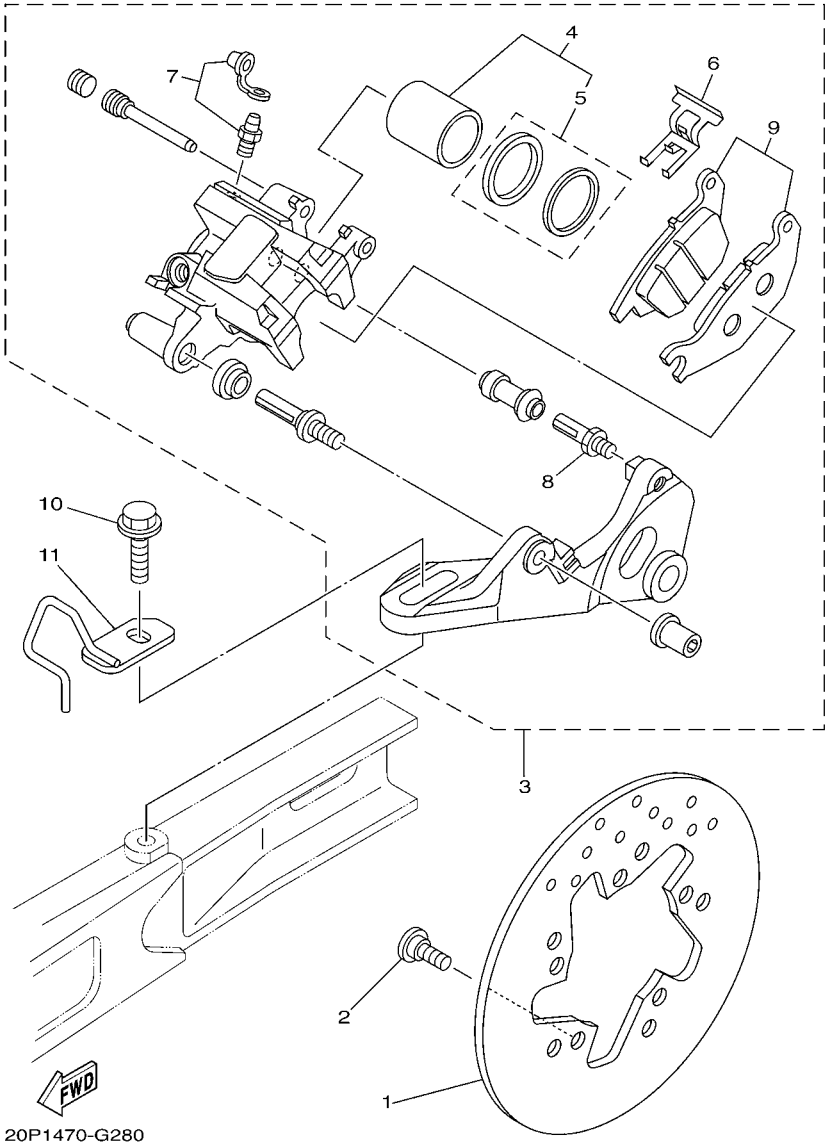

FIG. 28 CALIBRE FRENO TRASERA REAR BRAKE CALIPER

REF. Nº	CODIGO Nº PART NO.	DESCRIPCION DESCRIPTION	54C1					OBSERVACIONES REMARKS
1	20P–F582W–00	DISCO DE FRENO TRASEROS 2 DISK, REAR BRAKE 2	1					
2	90109–08015	PERNO BOLT	5					
3	20P–F580W–00	CALIBRE COMPLETO TRASEROS 2 CALIPER ASSY, REAR 2	1					
4	4S3–W0057–00	.PISTON COMPLETO PINZA .PISTON ASSY, CALIPER	1					
5	3GD–W0047–00	.JUEGO DE RETENES DE PINZA .CALIPER SEAL KIT	1					
6	4S3–F5919–00	.SOPORTE DE PASTILLAS .SUPPORT, PAD	1					
7	4S3–W0048–00	.CJTO TORNILLO DE PURGA .BLEED SCREW KIT	1					
8	3SP–F5914–51	.PASADOR .PIN, SLIDE	1					
9	20P–W0046–00	.JUEGO DE PASTILLAS DE FRENO 2 .BRAKE PAD KIT 2	1					
10	95817–10030	TORNILLO BOLT, FLANGE	1					
11	20P–F587A–00	SOPORTE DE MANGUERA FRENO HOLDER, BRAKE HOSE	1					

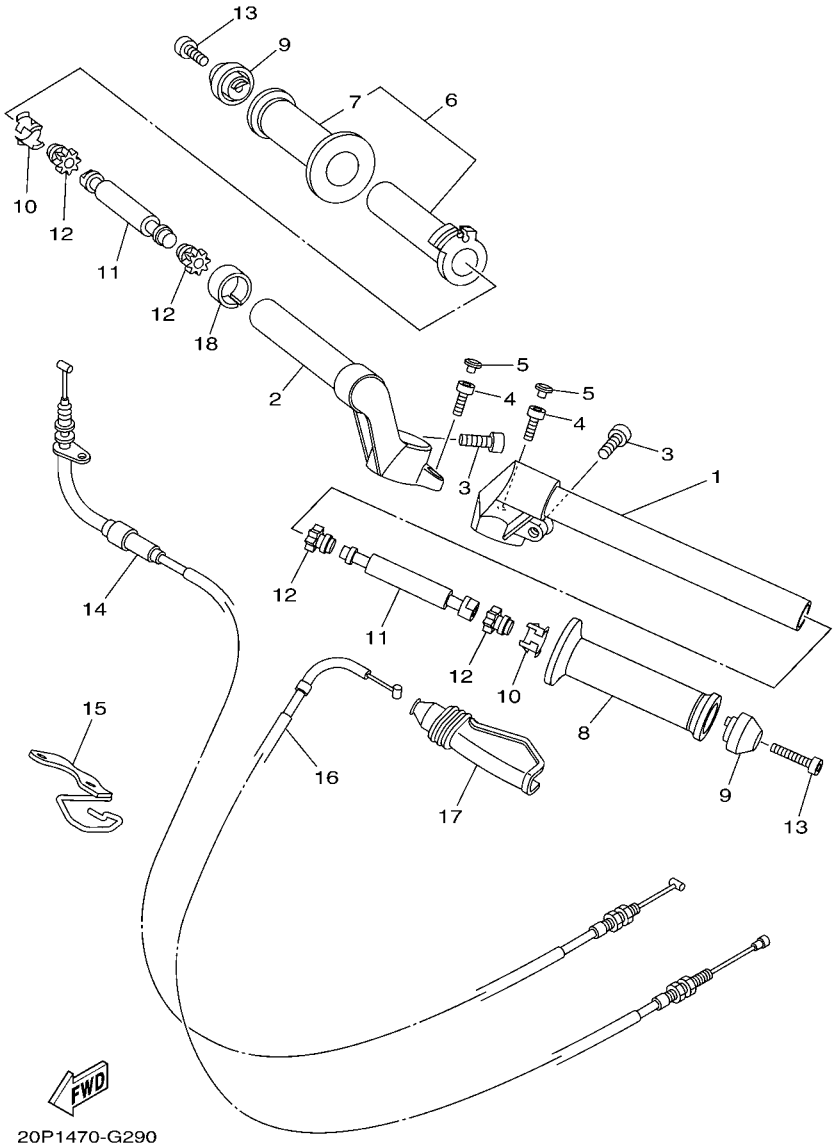

FIG. 29 MANILLAR & CABLE — STEERING HANDLE & CABLE

REF. Nº	CODIGO Nº PART NO.	DESCRIPCION DESCRIPTION	54C1					OBSERVACIONES REMARKS
1	20P–F6121–00	MANUBRIO (MI) HANDLEBAR (LEFT)	1					
2	20P–F6122–00	MANUBRIO (MD) HANDLEBAR (RIGHT)	1					
3	91317–08025	PERNO BOLT	2					
4	91317–06020	PERNO BOLT	2					
5	20P–F3469–00	TAPA DE PERNO CAP, BOLT	2					
6	20P–F6240–00	EMPUNADURA COMPLETA GRIP ASSY	1					
7	20P–F6242–00	.EMPUNADURA (MD) .GRIP (RIGHT)	1					
8	20P–F6241–00	EMPUNADURA GRIP	1					
9	20P–F6246–00	EXTREMO DE EMPUNADURA END, GRIP	2					
10	20P–F6257–00	TOPE STOPPER	2					
11	20P–F622H–00	CONTRAPESO WEIGHT	2					
12	20P–F622F–00	AMORTIGUADOR, DE UBICACION 1 DAMPER, LOCATING 1	4					
13	91317–06030	PERNO BOLT	2					
14	20P–F6311–00	CABLE DE ACELERADOR 1 CABLE, THROTTLE 1	1					
15	20P–F6315–00	GUIA DE CABLE GUIDE, WIRE	1					
16	20P–F6335–00	CABLE DE EMBRAGUE CABLE, CLUTCH	1					
17	20P–F6372–00	CUBIERTA DE PALANCA DE MANUB 1 COVER, HANDLE LEVER 1	1					
18	90387–22591	ESPACIADOR COLLAR	1					

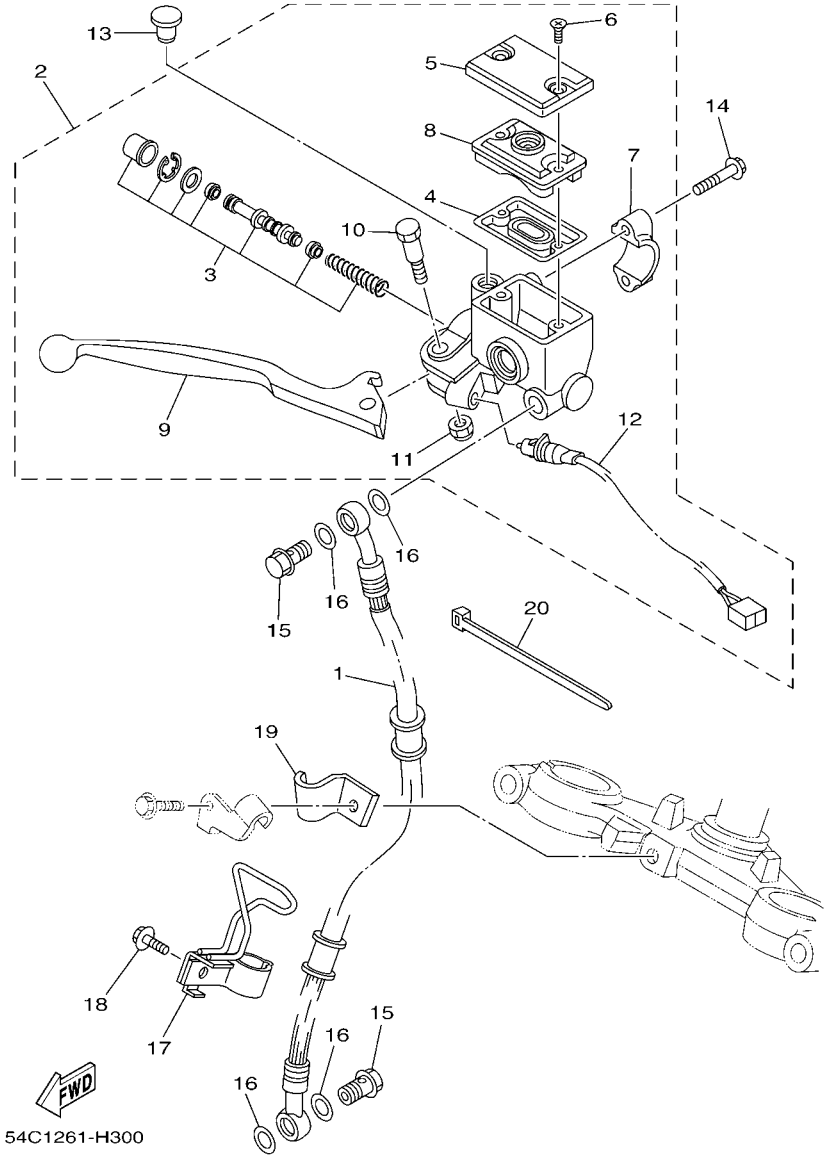

FIG. 30 CILINDRO MAESTRO DELANTERO FRONT MASTER CYLINDER

REF. Nº	CODIGO Nº PART NO.	DESCRIPCION DESCRIPTION	54C1					OBSERVACIONES REMARKS
1	20P–F5872–00	MANGUERA DE FRENO 1 HOSE, BRAKE 1	1					
2	3C1–F583T–01	CILINDRO MAESTRO COMPLETO MASTER CYLINDER ASSY	1					
3	5P0–W0041–00	.JUEGO DE CILINDRO MAESTRO .CYLINDER KIT, MASTER	1					
4	3RW–F5854–00	.EMPAQUE,DIAFRAGMA .GASKET, DIAPHRAGM	1					
5	3C1–F5852–00	.TAPA DE TANQUE DE RESERVA .CAP, RESERVOIR	1					
6	36Y–2589H–00	.TORNILLO .SCREW	2					
7	3RW–F5867–00	.SOPORTE DE CILINDRO MAESTRO .BRACKET, MASTER CYLINDER	1					
8	3C1–F5855–00	.BUJE DE DIAFRAGMA .BUSH,DIAPHRAGM	1					
9	3C1–H3922–00	.PALANCA 2 .LEVER 2	1					
10	90109–06577	.PERNO .BOLT	1					
11	95607–06100	.TUERCA AUTOBLOCANTE .NUT, U	1					
12	5BP–H3980–10	.INTERRUP. DE PARADA DELANTERO .FRONT STOP SWITCH ASSY	1					
13	90338–09802	TAPON PLUG	1					
14	95027–06025	PERNO, DE BRIDA BOLT, FLANGE	2					
15	90401–10159	PERNO DE UNION BOLT, UNION	2					
16	90201–10118	ARANDELA PLANA WASHER, PLATE	4					
17	20P–F5886–00	SOPORTE DE MANGUERA FRENO HOLDER, BRAKE HOSE	1					
18	95027–06016	PERNO, DE BRIDA BOLT, FLANGE	1					
19	20P–F5876–00	SOPORTE DE MANGUERA FRENO 2 HOLDER, BRAKE HOSE 2	1					
20	90464–50800	BRIDA CLAMP	1					

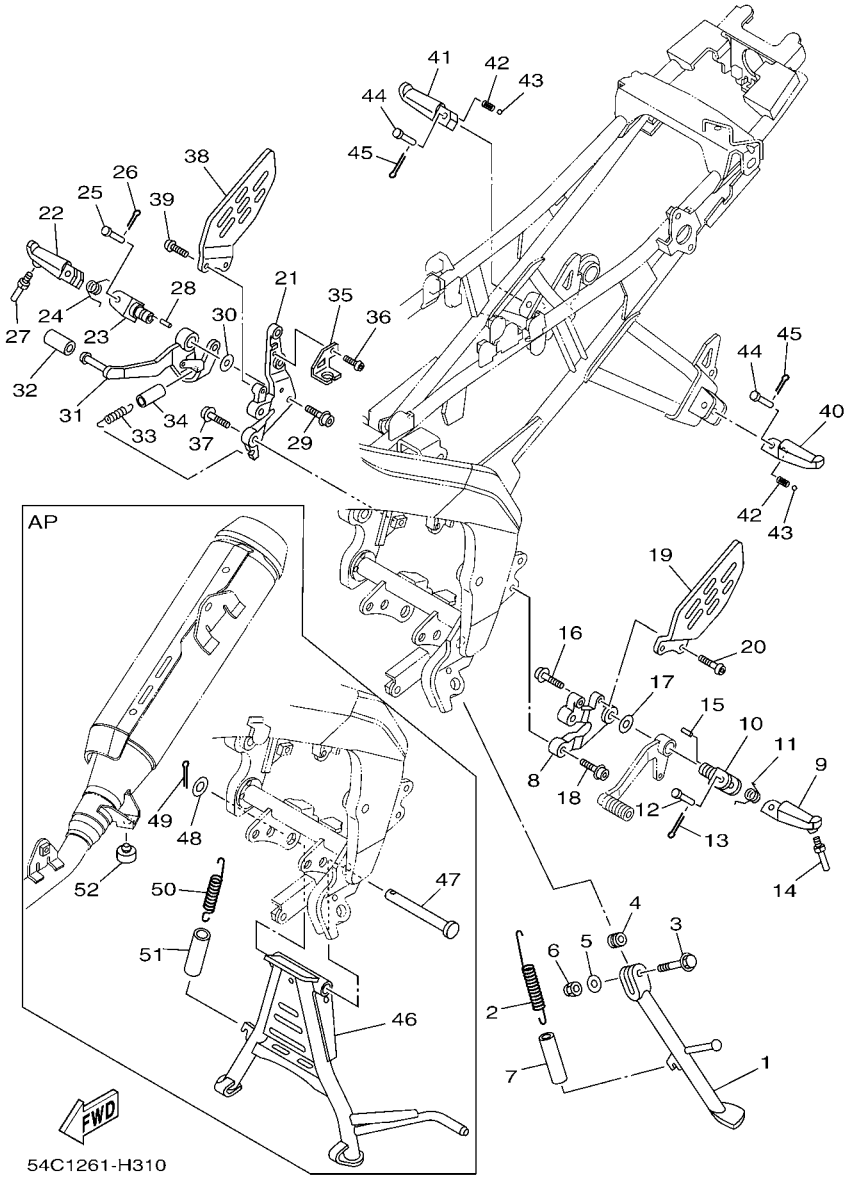

FIG. 31 SOPORTE & APOYAPIE STAND & FOOTREST

REF. Nº	CODIGO Nº PART NO.	DESCRIPCION DESCRIPTION	54C1					OBSERVACIONES REMARKS
1	20P–F7311–00	PUNTAL LATERAL STAND, SIDE	1					
2	90506–28800	RESORTE DE TENSION SPRING, TENSION	1					
3	90105–106A7	TORNILLO BOLT, FLANGE	1					
4	90387–10003	ESPACIADOR COLLAR	1					
5	92907–10600	ARANDELA WASHER, PLATE	1					
6	95617–10100	PERNO DE PUNTAL NUT, U	1					
7	90445–21848	TUBO (L70) HOSE (L70)	1					
8	20P–F7442–00	SOPORTE 2 BRACKET 2	1					
9	20P–F7451–00	APOYAPIE FOOTREST	1					
10	20P–F7411–00	APOYAPIE 1 FOOTREST 1	1					
11	90508–183B9	RESORTE DE TORSION SPRING, TORSION	1					
12	90240–08800	PASADOR CON HOYO PIN, CLEVIS	1					
13	91401–20012	CHAVETA PIN, COTTER	1					
14	2C0–27435–00	PERNO BOLT	1					
15	90249–02002	PASADOR PIN	1					
16	90110–10012	TORNILLO ALLEN BOLT, HEXAGON SOCKET HEAD	1					
17	90201–10066	ARANDELA PLANA WASHER, PLATE	1					
18	90110–08199	TORNILLO ALLEN BOLT, HEXAGON SOCKET HEAD	2					
19	20P–F7445–00	PLACE 1 PLATE 1	1					
20	92012–06016	PERNO BOLT, BUTTON HEAD	2					
21	20P–F7443–00	SOPORTE 3 BRACKET 3	1					
22	20P–F7461–00	APOYAPIE FOOTREST	1					
23	20P–F7411–00	APOYAPIE 1 FOOTREST 1	1					
24	90508–184B0	RESORTE DE TORSION SPRING, TORSION	1					
25	90240–08800	PASADOR CON HOYO PIN, CLEVIS	1					
26	91401–20012	CHAVETA PIN, COTTER	1					
27	2C0–27435–00	PERNO BOLT	1					

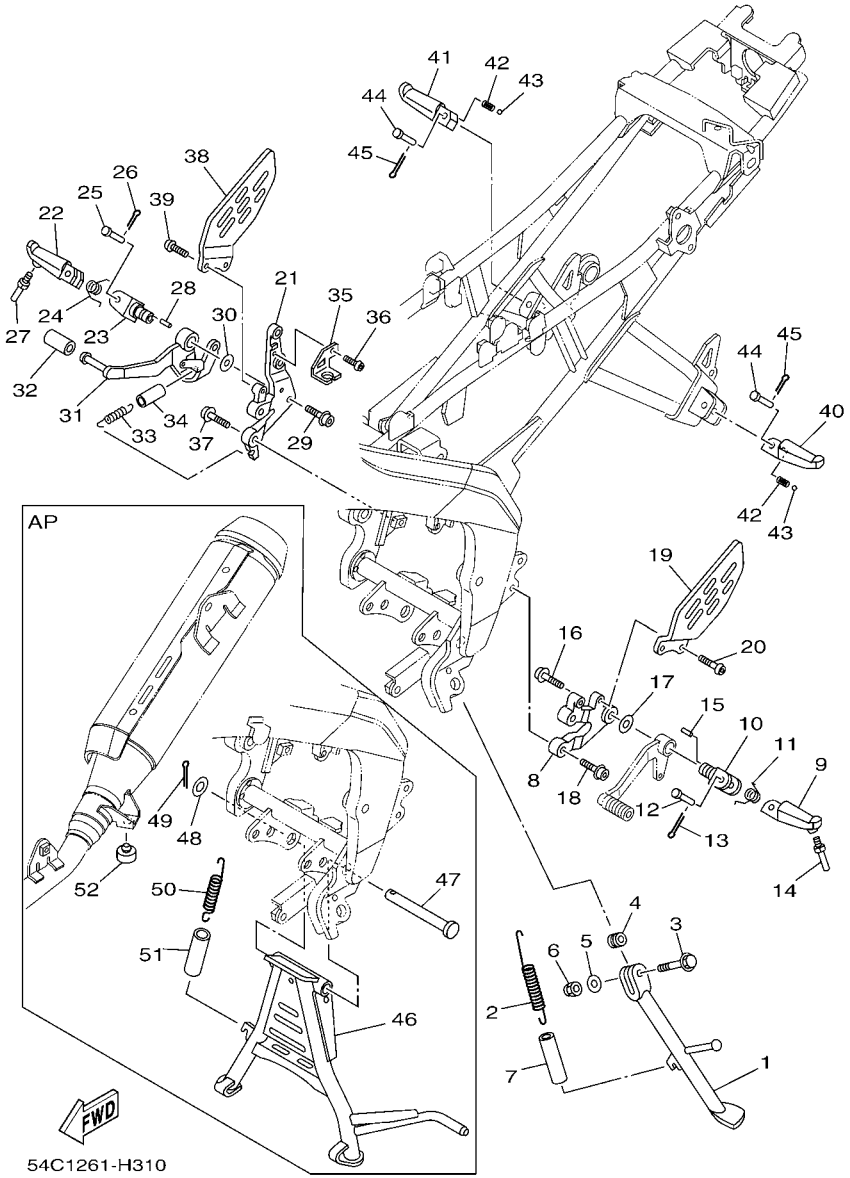

FIG. 31 SOPORTE & APOYAPIE STAND & FOOTREST

REF. Nº	CODIGO Nº PART NO.	DESCRIPCION DESCRIPTION	54C1					OBSERVACIONES REMARKS
28	90249–02002	PASADOR PIN	1					
29	90110–10012	TORNILLO ALLEN BOLT, HEXAGON SOCKET HEAD	1					
30	90201–10066	ARANDELA PLANA WASHER, PLATE	1					
31	20P–F7211–00	PEDAL DE FRENO PEDAL, BRAKE	1					
32	20P–E8113–00	FUNDA DEL PEDAL DEL CAMBIO COVER, SHIFT PEDAL	1					
33	90506–20193	RESORTE DE TENSION SPRING, TENSION	1					
34	90445–16807	TUBO HOSE	1					
35	20P–F144G–00	SOPORTE DE INTERRUPTOR STAY, STOP SWITCH	1					
36	92012–06010	PERNO BOLT, BUTTON HEAD	1					
37	90110–08199	TORNILLO ALLEN BOLT, HEXAGON SOCKET HEAD	2					
38	20P–F7446–00	PLACE 2 PLATE 2	1					
39	92012–06016	PERNO BOLT, BUTTON HEAD	2					
40	20P–F7431–00	APOYAPIE POSTERIOR 1 FOOTREST, REAR 1	1					
41	20P–F7441–00	APOYAPIE POSTERIOR 2 FOOTREST, REAR 2	1					
42	90501–12743	RESORTE DE COMPRESION SPRING, COMPRESSION	2					
43	93501–04805	BOLA BALL	2					
44	90240–08800	PASADOR CON HOYO PIN, CLEVIS	2					
45	91401–20012	CHAVETA PIN, COTTER	2					
46	3C1–F7111–00	PUNTAL PRINCIPAL STAND, MAIN	1					AP AP
47	3C1–F7112–00	EJE DE PUNTAL PRINCIPAL SHAFT, MAIN STAND	1					AP AP
48	90201–163H8	ARANDELA PLANA WASHER, PLATE	1					AP AP
49	91401–30030	CHAVETA PIN, COTTER	1					AP AP
50	90506–35003	RESORTE DE TENSION SPRING, TENSION	1					AP AP
51	90445–21848	TUBO (L70) HOSE (L70)	1					AP AP
52	4YY–F7114–00	TOPE DE PUNTAL PRINCIPAL STOPPER, MAIN STAND	1					AP AP

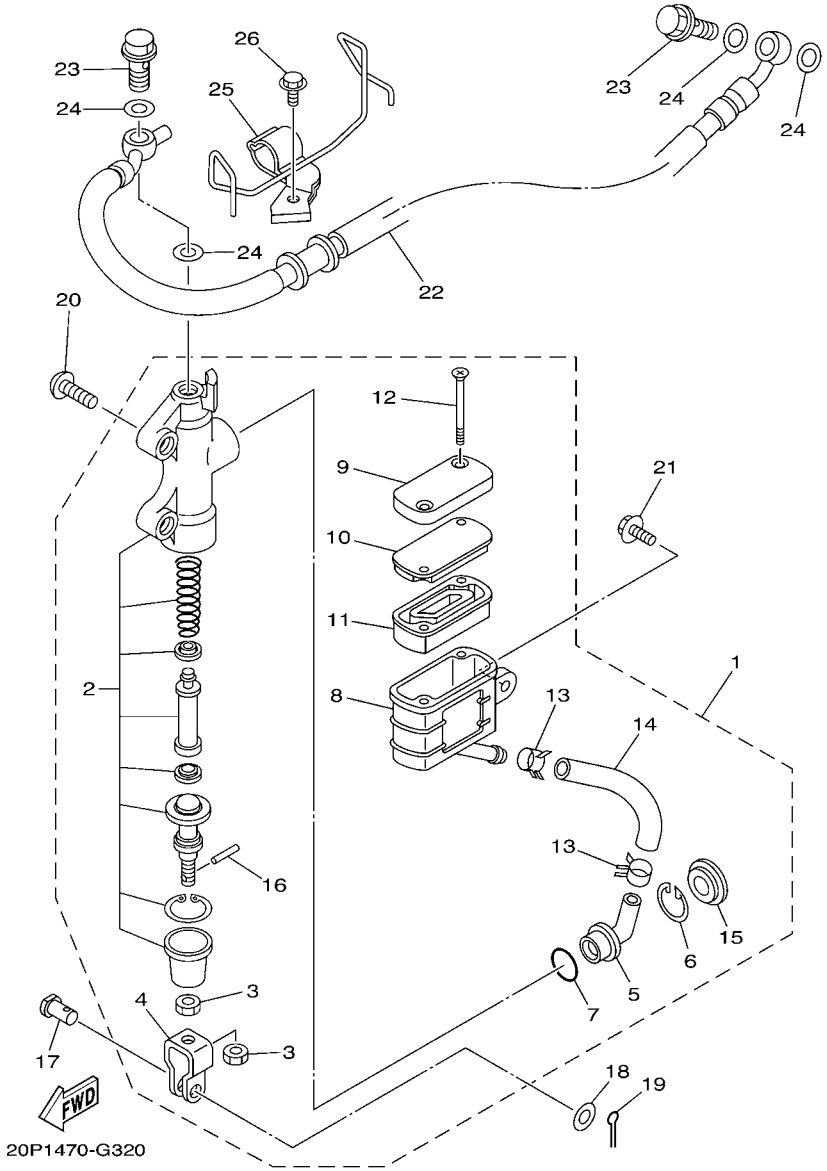

FIG. 32 CILINDRO MAESTRO TRASERO REAR MASTER CYLINDER

REF. Nº	CODIGO Nº PART NO.	DESCRIPCION DESCRIPTION	54C1					OBSERVACIONES REMARKS
1	20P–F583V–01	CILINDRO, MAESTRO TRASERO RR. MASTER CYLINDER ASSY.	1					
2	20P–W0042–00	.JUEGO DE CILINDRO MAESTRO .CYLINDER KIT, MASTER	1					
3	95301–08700	.TUERCA HEXAGONAL .NUT	2					
4	2YK–F7222–00	.UNION .JOINT	1					
5	4ML–F582A–50	.CONECTOR .JOINT	1					
6	2VN–F5866–00	.PRESILLA REDONDA .CIRCLIP	1					
7	93210–15620	.ANILLO O .O-RING	1					
8	20P–F5894–00	.TANQUE DE RESERVA .TANK, RESERVOIR	1					
9	20P–F5852–00	.TAPA DE TANQUE DE RESERVA .CAP, RESERVOIR	1					
10	20P–F585B–00	.PLACA, DIAFRAGMA .PLATE, DIAPHRAGM	1					
11	20P–F5854–00	.EMPAQUE,DIAFRAGMA .GASKET, DIAPHRAGM	1					
12	98707–04045	.TORNILLO DE CABEZA PLANA .SCREW, FLAT HEAD	2					
13	90467–12085	.PRESILLA .CLIP	2					
14	20P–F5895–00	.MANGUERA DE TANQUE DE RESERVA .HOSE, RESERVOIR	1					
15	3FV–F589A–00	.CUBIERTA PARA POLVO .COVER, DUST	1					
16	4TT–F7238–00	.PASADOR .PIN	1					
17	90240–08124	PASADOR CON HOYO PIN, CLEVIS	1					
18	90201–08083	ARANDELA PLANA WASHER, PLATE	1					
19	91401–20012	CHAVETA PIN, COTTER	1					
20	92012–08020	PERNO BOLT, BUTTON HEAD	2					
21	90119–06044	TORNILLO CON ARANDELA BOLT, WITH WASHER	1					
22	20P–F5873–00	MANGUERA DE FRENO 2 HOSE, BRAKE 2	1					
23	90401–10159	PERNO DE UNION BOLT, UNION	2					
24	90201–10118	ARANDELA PLANA WASHER, PLATE	4					
25	20P–F5887–00	SOPORTE DE MANGUERA FRENO HOLDER, BRAKE HOSE	1					
26	95027–06010	PERNO, DE BRIDA BOLT, FLANGE	1					

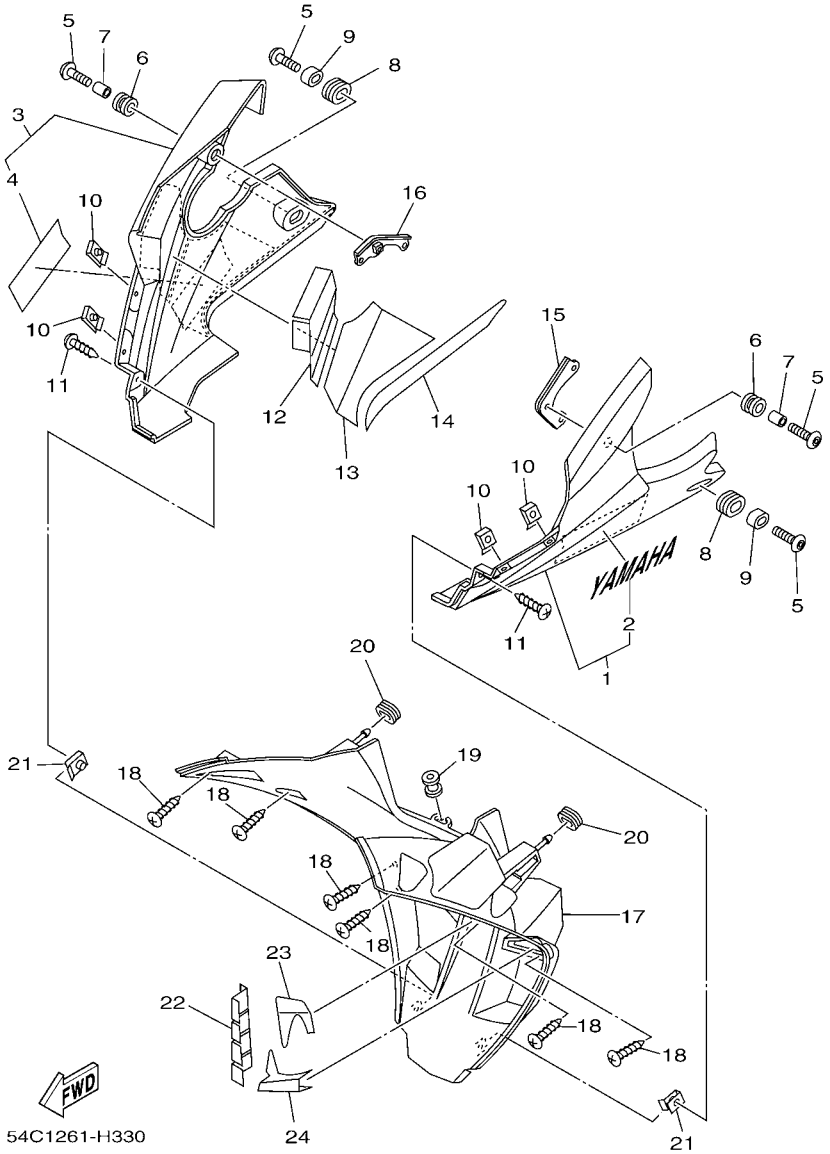

FIG. 33 PATA PROTEGIDA LEG SHIELD

REF. Nº	CODIGO Nº PART NO.	DESCRIPCION DESCRIPTION	54C1					OBSERVACIONES REMARKS
1	20P–XF838–00–33	CUBIERTA INFERIOR 1 UNDER COVER ASSY 1	1					UR YB PARA SMX UR YB FOR DPBMY
	20P–XF838–00–P0	CUBIERTA INFERIOR 1 UNDER COVER ASSY 1	1					UR PARA SMX UR FOR SMX
	20P–XF838–20–P1	CUBIERTA INFERIOR 1 UNDER COVER ASSY 1	1					UR PARA DRMK UR FOR DRMK
2	99241–00160	.EMBLEMA, YAMAHA .EMBLEM, YAMAHA	1					UR PARA DPBMY UR FOR DPBMY
	99245–00160	.EMBLEMA, YAMAHA .EMBLEM, YAMAHA	1					UR PARA SMX UR FOR SMX
	99246–00160	.EMBLEMA, YAMAHA .EMBLEM, YAMAHA	1					UR PARA DRMK UR FOR DRMK
3	20P–XF839–00–33	CUBIERTA INFERIOR 2 UNDER COVER ASSY 2	1					UR YB PARA DPBMY UR YB FOR DPBMY
	20P–XF839–00–P0	CUBIERTA INFERIOR 2 UNDER COVER ASSY 2	1					UR PARA SMX UR FOR SMX
	20P–XF839–20–P1	CUBIERTA INFERIOR 2 UNDER COVER ASSY 2	1					UR PARA DRMK UR FOR DRMK
4	99241–00120	.EMBLEMA, YAMAHA .EMBLEM, YAMAHA	1					UR PARA DPBMY UR FOR DPBMY
	99245–00120	.EMBLEMA, YAMAHA .EMBLEM, YAMAHA	1					UR PARA SMX UR FOR SMX
	99246–00120	.EMBLEMA, YAMAHA .EMBLEM, YAMAHA	1					UR PARA DRMK UR FOR DRMK
5	90111–06117	TORNILLO BOLT,HEX. SOCKET BUTTON	4					
6	90480–14003	TAPON GROMMET	2					
7	90387–068C2	ESPACIADOR COLLAR	2					
8	90480–01811	TAPON GROMMET	2					
9	20P–F1749–00	COLLAR COLLAR	2					
10	90183–05076	TUERCA DE RESORTE NUT, SPRING	4					
11	97707–50012	TORNILLO SCREW, TRUSS HEAD TAPPING	2					
12	20P–F848M–00	ASIENTO4 SEAT 4	1					
13	20P–F848N–00	ASIENTO 5 SEAT 5	1					
14	20P–F848P–00	ASIENTO 6 SEAT 6	1					
15	20P–F831U–00	APOYO 1 STAY, SIDE 1	1					
16	20P–F832U–00	APOYO 1 STAY, SIDE 1	1					
17	20P–F836M–00	PANEL 3 PANEL, INNER 3	1					
18	97707–50012	TORNILLO SCREW, TRUSS HEAD TAPPING	6					
19	20P–F1773–00	ANILLO PROTECTOR GROMMET	1					

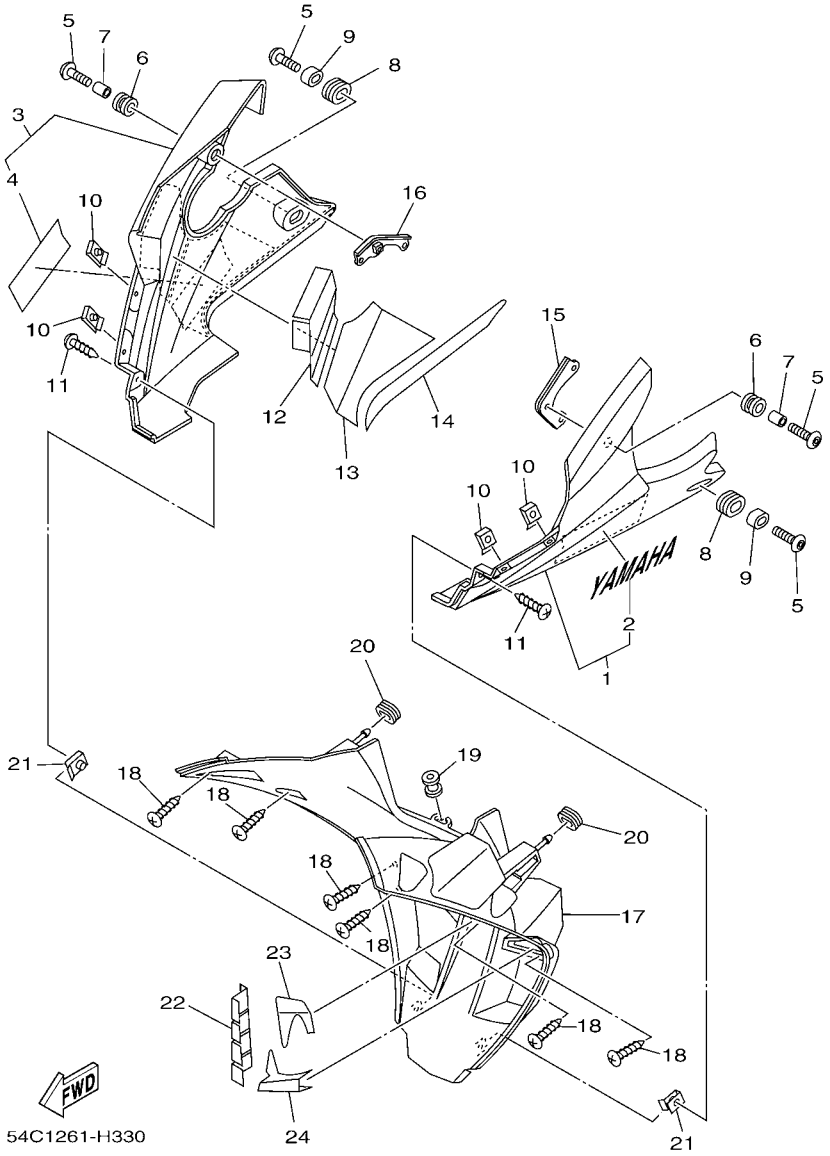

FIG. 33 PATA PROTEGIDA LEG SHIELD

REF. Nº	CODIGO Nº PART NO.	DESCRIPCION DESCRIPTION	54C1					OBSERVACIONES REMARKS
20	90480–01559	TAPON GROMMET	2					
21	90183–05042	TUERCA DE RESORTE NUT, SPRING	2					
22	20P–F848H–00	ASIENTO SEAT	1					
23	20P–F848K–00	ASIENTO 2 SEAT 2	1					
24	20P–F848L–00	ASIENTO 3 SEAT 3	1					

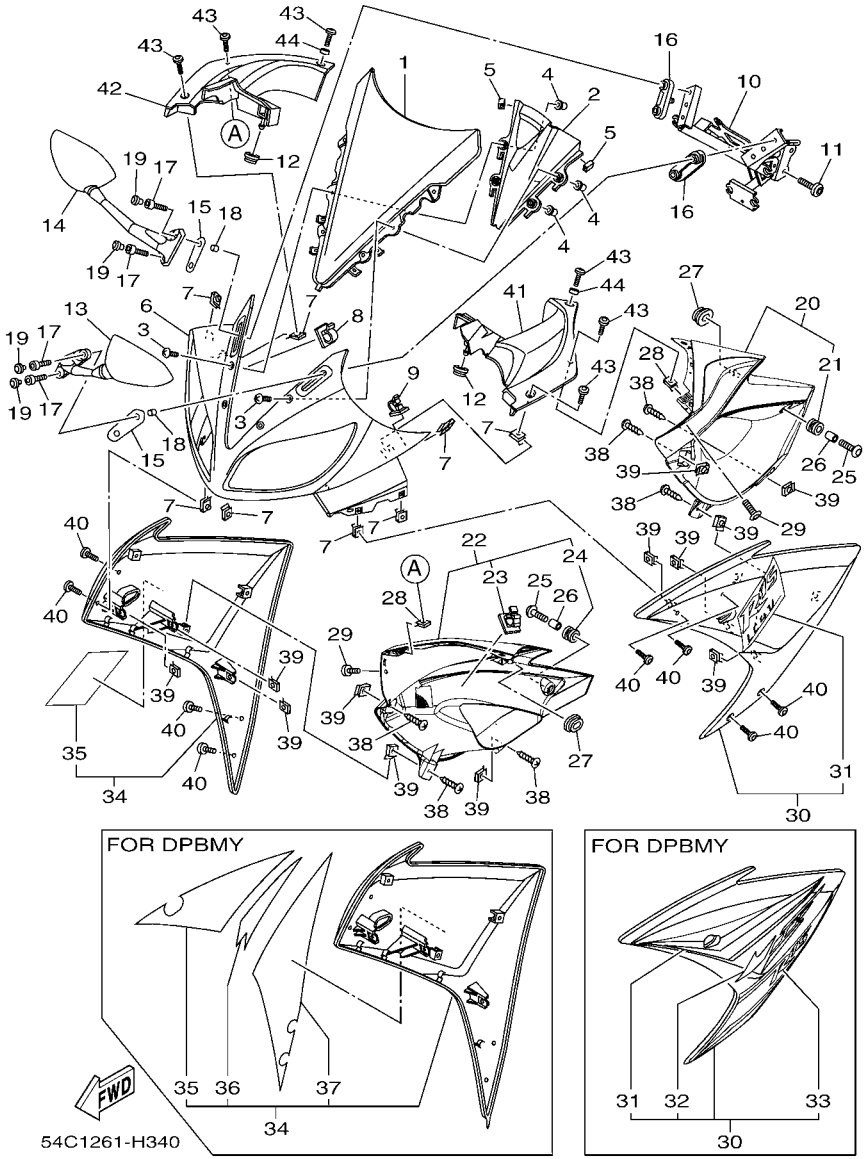

FIG. 34 PARABRISAS WINDSHIELD

REF. Nº	CODIGO Nº PART NO.	DESCRIPCION DESCRIPTION	54C1					OBSERVACIONES REMARKS
1	20P–F8381–00	PARABRISA WINDSHIELD	1					
2	20P–F836R–00	PANEL 5 PANEL, INNER 5	1					
3	90150–05024	TORNILLO CABEZA REDONDA SCREW, ROUND HEAD	4					
4	90179–05523	TUERCA NUT	4					
5	20P–F8371–00	AMORTIGUADOR DAMPER	2					
6	20P–F835G–00–P0	CARROCERIA, DELANT. SUP. 1 BODY, FRONT UPPER 1	1					UR PARA DPBMY UR FOR DPBMY
	20P–F835G–00–P1	CARROCERIA, DELANT. SUP. 1 BODY, FRONT UPPER 1	1					UR PARA SMX UR FOR SMX
	20P–F835G–00–P2	CARROCERIA, DELANT. SUP. 1 BODY, FRONT UPPER 1	1					UR PARA DRMK UR FOR DRMK
7	90183–05076	TUERCA DE RESORTE NUT, SPRING	8					
8	90464–20003	BRIDA CLAMP	1					
9	90464–25160	BRIDA CLAMP	1					
10	20P–F8356–00	SOPORTE 1 STAY 1	1					
11	90109–083A8	PERNO BOLT	2					
12	90480–01870	TAPON GROMMET	2					
13	20P–F6280–00	ESPEJO COMPLETO (IZQUIERDO) REAR VIEW MIRROR ASSY (LEFT)	1					
14	20P–F6290–00	ESPEJO COMPLETO (DERECHO) REAR VIEW MIRROR ASSY (RIGHT)	1					
15	20P–F8483–00	PLACA 1 PLATE, RUBBER 1	2					
16	20P–F8484–00	PLACA 2 PLATE, RUBBER 2	2					
17	91317–06025	PERNO BOLT	4					
18	90387–068C2	ESPACIADOR COLLAR	4					
19	20P–F3469–00	TAPA DE PERNO CAP, BOLT	4					
20	20P–F117V–00–P0	CUBIERTA 7 COVER 7	1					UR PARA DPBMY UR FOR DPBMY
	20P–F117V–00–P1	CUBIERTA 7 COVER 7	1					UR PARA SMX UR FOR SMX
	20P–F117V–00–P2	CUBIERTA 7 COVER 7	1					UR PARA DRMK UR FOR DRMK
21	90480–14003	.TAPON .GROMMET	1					
22	54C–XF117–00–P0	CUBIERTA 8 COVER 8	1					UR PARA DPBMY UR FOR DPBMY
	54C–XF117–10–P1	CUBIERTA 8 COVER 8	1					UR PARA SMX UR FOR SMX

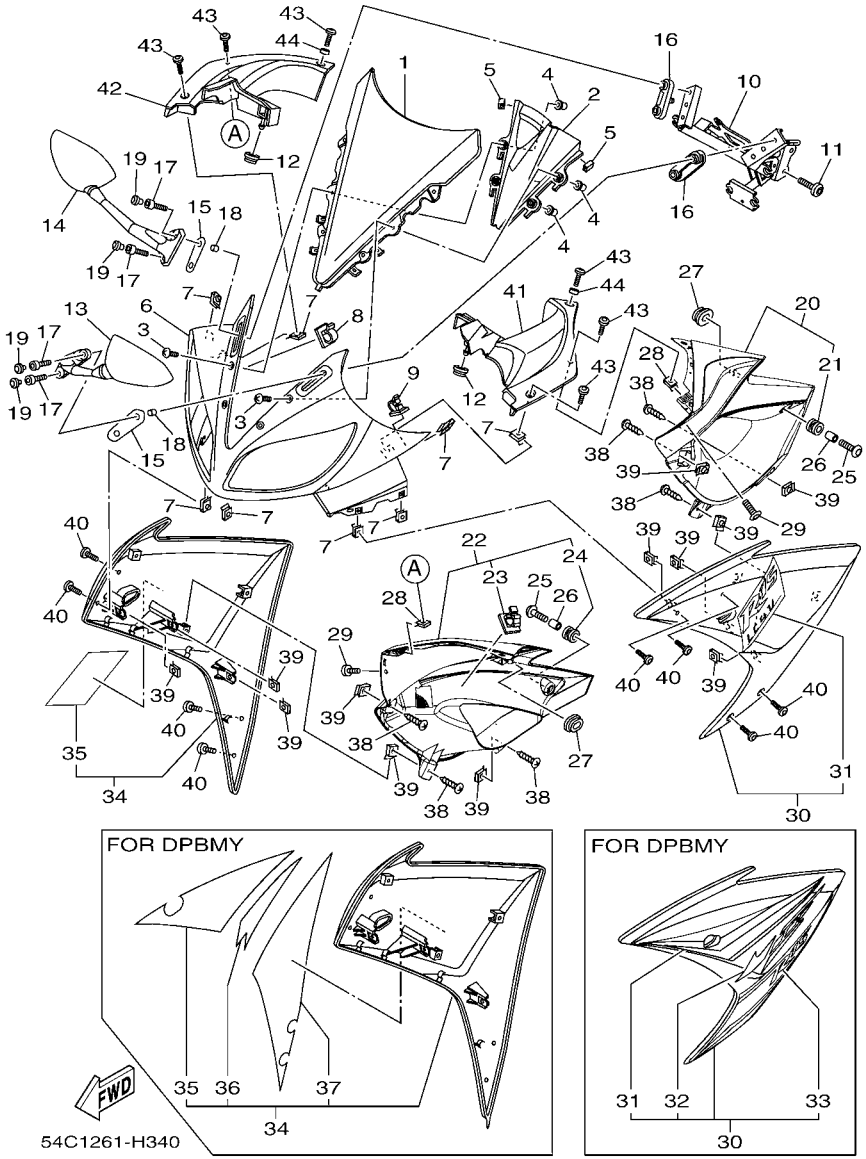

FIG. 34 PARABRISAS WINDSHIELD

REF. Nº	CODIGO Nº PART NO.	DESCRIPCION DESCRIPTION	54C1					OBSERVACIONES REMARKS
22	54C–XF117–20–P2	CUBIERTA 8 COVER 8	1					UR PARA DRMK UR FOR DRMK
23	90464–20003	.BRIDA .CLAMP	1					
24	90480–14003	.TAPON .GROMMET	1					
25	90111–06117	TORNILLO BOLT,HEX. SOCKET BUTTON	2					
26	90387–068C2	ESPACIADOR COLLAR	2					
27	90480–01870	TAPON GROMMET	2					
28	90183–05076	TUERCA DE RESORTE NUT, SPRING	2					
29	90111–05003	TORNILLO BOLT,HEX. SOCKET BUTTON	2					
30	20P–XF836–00–P0	PANEL COMPLETO 1 PANEL COMP 1	1					UR PARA DPBMY UR FOR DPBMY
	20P–XF836–00–P1	PANEL COMPLETO 1 PANEL COMP 1	1					UR PARA SMX UR FOR SMX
	20P–XF836–20–P1	PANEL COMPLETO 1 PANEL COMP 1	1					UR MBL2 PARA DRMK UR MBL2 FOR DRMK
31	20P–F8391–10	.CALCOMANIA 1 .GRAPHIC, 1	1					UR PARA DPBMY UR FOR DPBMY
	20P–F8391–00	.CALCOMANIA 1 .GRAPHIC, 1	1					UR PARA SMX UR FOR SMX
	20P–F8391–20	.CALCOMANIA 1 .GRAPHIC, 1	1					UR PARA DRMK UR FOR DRMK
32	20P–F8393–10	.CALCOMANIA 3 .GRAPHIC, 3	1					PARA DPBMY FOR DPBMY
33	20P–F8398–00	.GRAFICO 5 .GRAPHIC 5	1					PARA DPBMY FOR DPBMY
34	20P–XF83A–00–P0	PANEL COMPLETO 2 PANEL COMP 2	1					UR PARA DPBMY UR FOR DPBMY
	20P–XF83A–00–P1	PANEL COMPLETO 2 PANEL COMP 2	1					UR PARA SMX UR FOR SMX
	20P–XF83A–20–P1	PANEL COMPLETO 2 PANEL COMP 2	1					UR MBL2 PARA DRMK UR MBL2 FOR DRMK
35	20P–F8392–10	.CALCOMANIA 2 .GRAPHIC, 2	1					UR PARA DPBMY UR FOR DPBMY
	20P–F8392–00	.CALCOMANIA 2 .GRAPHIC, 2	1					UR PARA SMX UR FOR SMX
	20P–F8392–20	.CALCOMANIA 2 .GRAPHIC, 2	1					UR PARA DRMK UR FOR DRMK
36	20P–F8394–10	.CALCOMANIA 4 .GRAPHIC, 4	1					PARA DPBMY FOR DPBMY
37	20P–F8399–00	.CALCOMANIA 6 .GRAPHIC 6	1					PARA DPBMY FOR DPBMY
38	97707–50012	TORNILLO SCREW, TRUSS HEAD TAPPING	6					
39	90183–05042	TUERCA DE RESORTE NUT, SPRING	12					
40	90111–05003	TORNILLO BOLT,HEX. SOCKET BUTTON	8					

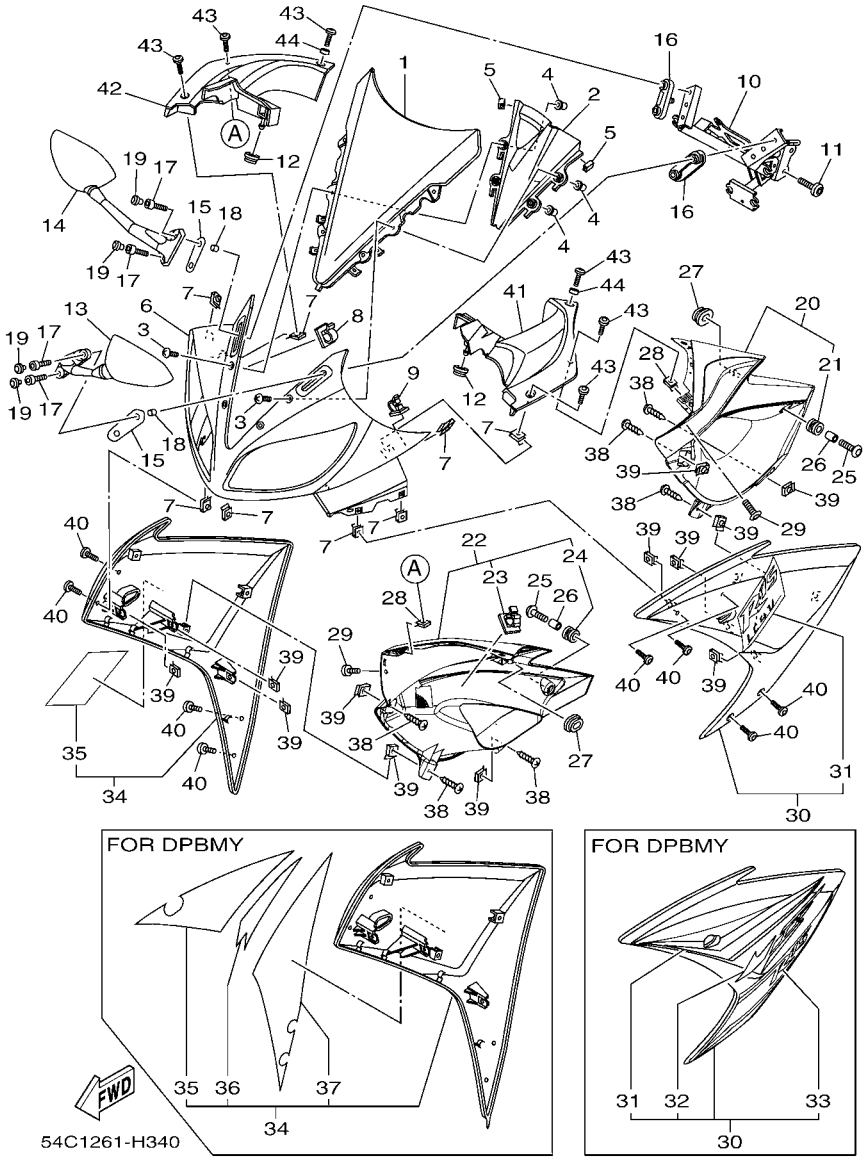

FIG. 34 PARABRISAS WINDSHIELD

REF. Nº	CODIGO Nº PART NO.	DESCRIPCION DESCRIPTION	54C1					OBSERVACIONES REMARKS
41	20P–F837L–00	PANEL DE CONSOLA PANEL, CONSOLE 1	1					
42	20P–F837M–00	PANEL, DE CONSOLA 2 PANEL, CONSOLE 2	1					
43	90111–05003	TORNILLO BOLT,HEX. SOCKET BUTTON	6					
44	90387–068C4	ESPACIADOR COLLAR	2					

FIG. 35 GENERADOR GENERATOR

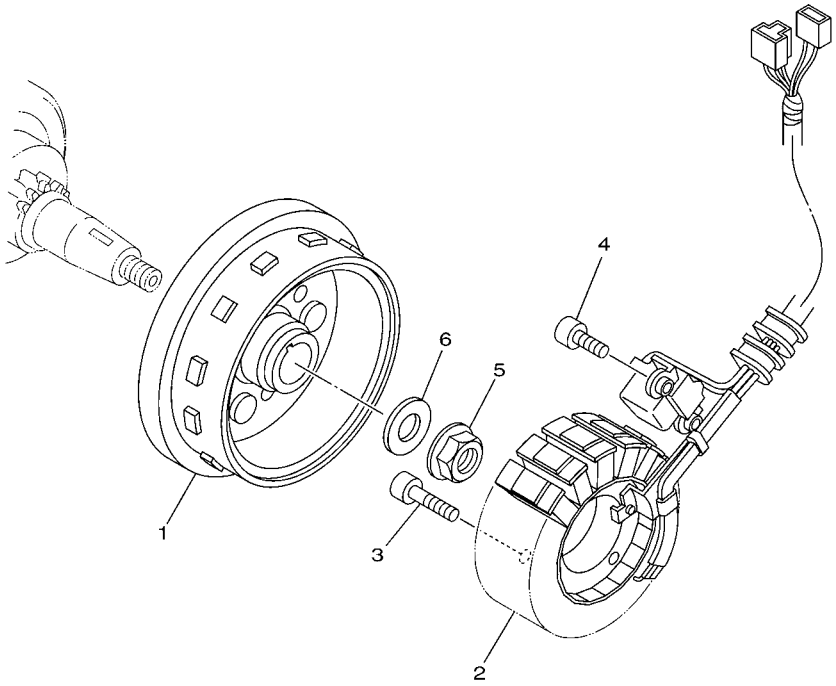

3C11460-F320

REF. Nº	CODIGO Nº PART NO.	DESCRIPCION DESCRIPTION	54C1					OBSERVACIONES REMARKS
1	3C1–H1450–00	ROTOR COMPLETO ROTOR ASSY	1					
2	3C1–H1410–01	ESTATOR COMPLETO STATOR ASSY	1					
3	91317–06025	PERNO BOLT	3					
4	91317–06016	PERNO BOLT	2					
5	95707–12500	TUERCA DE BRIDA NUT, FLANGE	1					
6	90201–122H1	ARANDELA PLANA WASHER, PLATE	1					

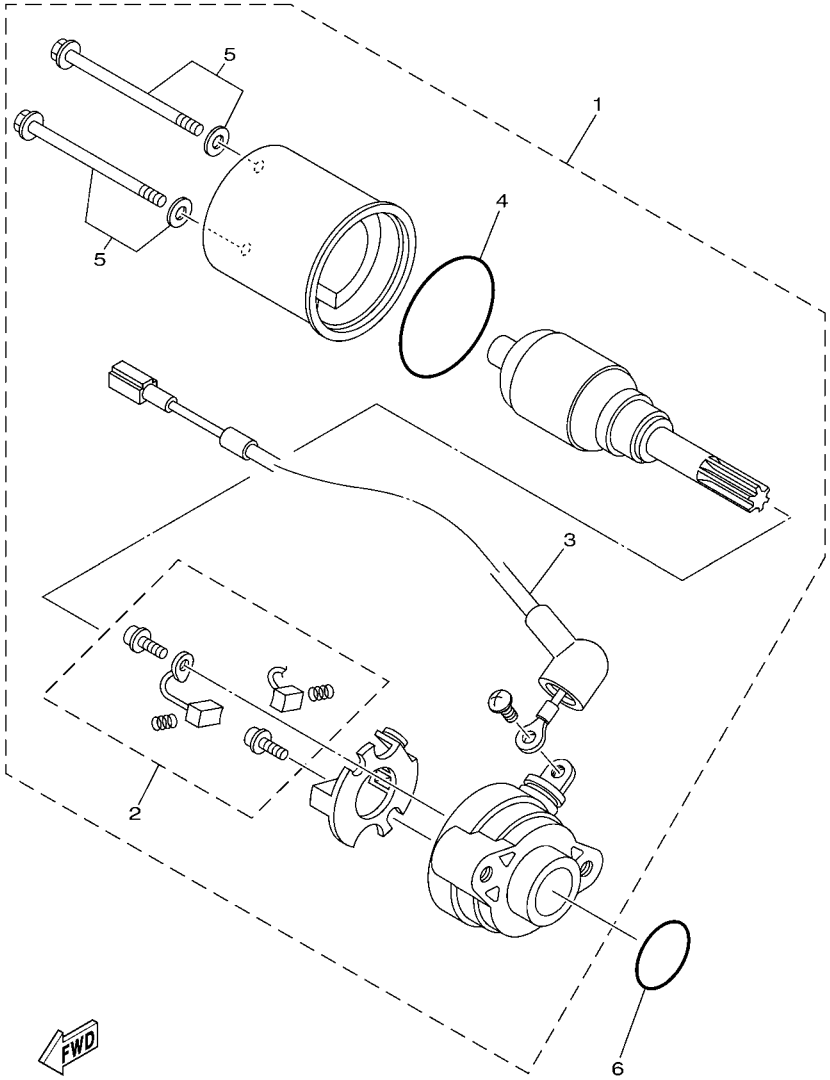

FIG. 36 MOTOR DE ARRANQUE STARTING MOTOR

REF. Nº	CODIGO Nº PART NO.	DESCRIPCION DESCRIPTION	54C1					OBSERVACIONES REMARKS
1	5D7–H1800–00	MOTOR DE ARRANQUE COMPLETO STARTING MOTOR ASSY	1					
2	3AY–H1801–00	.JUEGO DE ESCOBILLA .BRUSH SET	1					
3	5D7–8183G–00	.CABLE DEL MOTOR COMPL. .CORD COMP.	1					
4	3AY–H182M–00	.ANILLO EN O .O-RING	1					
5	3AY–H1828–00	.TORNILLO DE EMPUJE 2 .BOLT 2	1					
6	93210–26805	ANILLO O O-RING	1					

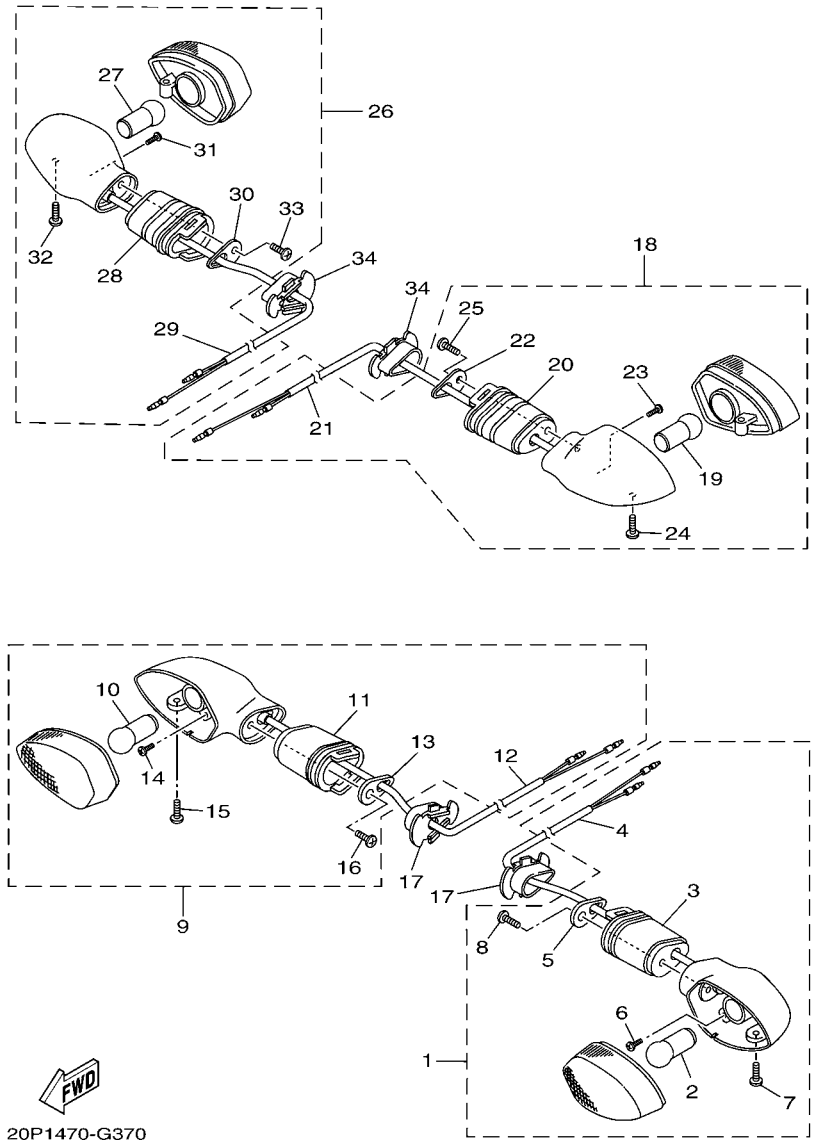

FIG. 37 LUZ DE DESTELLADOR FLASHER LIGHT

REF. Nº	CODIGO Nº PART NO.	DESCRIPCION DESCRIPTION	54C1					OBSERVACIONES REMARKS
1	20P–H3310–00	DESTELLADOR DE LUZ DELANT. FRONT FLASHER LIGHT ASSY 1	1					
2	20P–H3311–00	.BOMBILLA (12V-10W) .BULB, FLASHER (12V-10W)	1					
3	20P–H3318–00	.SOPORTE DE DESTELLADOR 1 .STAY, FLASHER 1	1					
4	20P–H331E–00	.CORDON COMPLETO .CORD ASSY	1					
5	20P–H3618–00	.PLACA .PLATE	1					
6	20P–H213A–00	.TORNILLO ACCESORIO .SCREW, FITTING	1					
7	20P–H3333–00	.TORNILLO ACCESORIO DE LENTE .SCREW, LENS FITTING	1					
8	20P–H2133–00	.TORNILLO ACCESORIO .SCREW, FITTING	1					
9	20P–H3320–00	DESTELLADOR DE LUZ DELANT. FRONT FLASHER LIGHT ASSY 2	1					
10	20P–H3311–00	.BOMBILLA (12V-10W) .BULB, FLASHER (12V-10W)	1					
11	20P–H3318–00	.SOPORTE DE DESTELLADOR 1 .STAY, FLASHER 1	1					
12	20P–H332E–00	.CABLE COMPL. .CORD ASSY	1					
13	20P–H3618–00	.PLACA .PLATE	1					
14	20P–H213A–00	.TORNILLO ACCESORIO .SCREW, FITTING	1					
15	20P–H3333–00	.TORNILLO ACCESORIO DE LENTE .SCREW, LENS FITTING	1					
16	20P–H2133–00	.TORNILLO ACCESORIO .SCREW, FITTING	1					
17	5YY–H3318–10	SOPORTE DE DESTELLADOR 1 STAY, FLASHER 1	2					
18	20P–H3330–00	DESTELLADOR DE LUZ TRAS.COMPL. REAR FLASHER LIGHT ASSY 1	1					
19	20P–H3311–00	.BOMBILLA (12V-10W) .BULB, FLASHER (12V-10W)	1					
20	20P–H3318–00	.SOPORTE DE DESTELLADOR 1 .STAY, FLASHER 1	1					
21	20P–H333E–00	.CABLE COMPLETA .CORD ASS'Y	1					
22	20P–H3618–00	.PLACA .PLATE	1					
23	20P–H213A–00	.TORNILLO ACCESORIO .SCREW, FITTING	1					
24	20P–H3333–00	.TORNILLO ACCESORIO DE LENTE .SCREW, LENS FITTING	1					
25	20P–H2133–00	.TORNILLO ACCESORIO .SCREW, FITTING	1					
26	20P–H3340–00	DESTELLADOR DE LUZ TRAS.COMPL. REAR FLASHER LIGHT ASSY 2	1					
27	20P–H3311–00	.BOMBILLA (12V-10W) .BULB, FLASHER (12V-10W)	1					

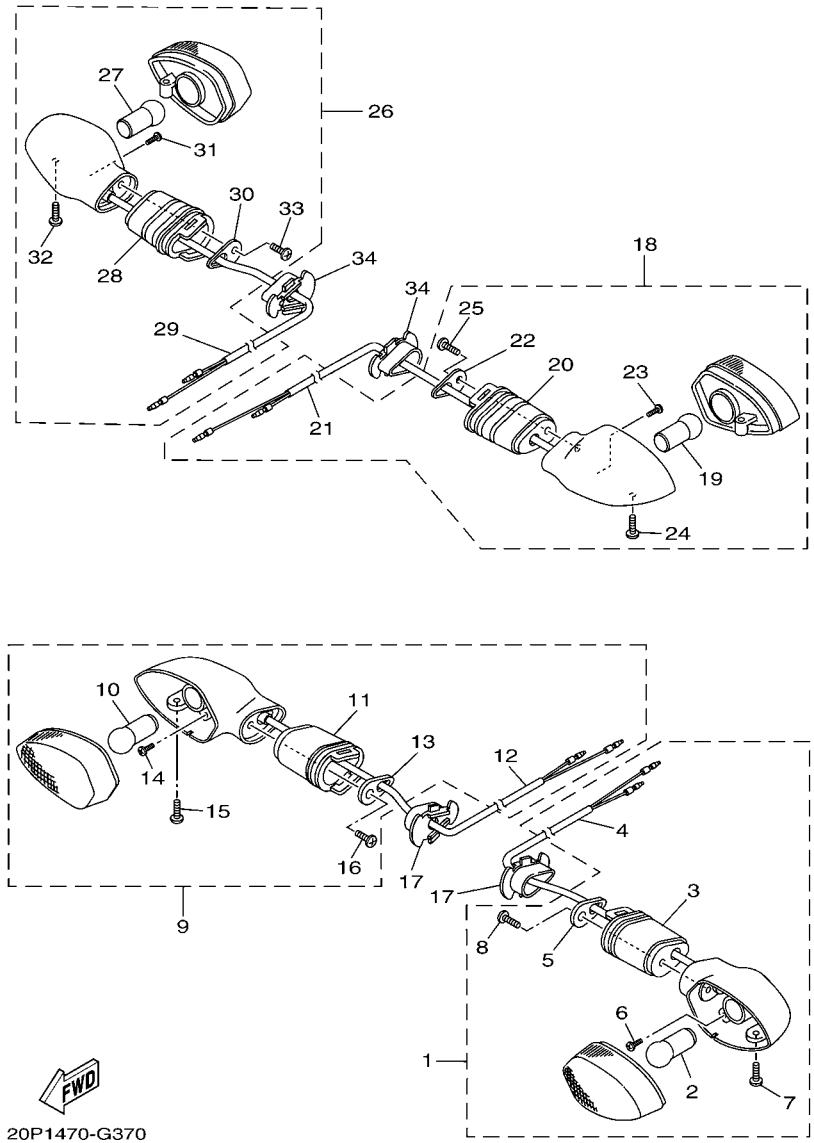

FIG. 37 LUZ DE DESTELLADOR FLASHER LIGHT

REF. Nº	CODIGO Nº PART NO.	DESCRIPCION DESCRIPTION	54C1					OBSERVACIONES REMARKS
28	20P–H3318–00	.SOPORTE DE DESTELLADOR 1 .STAY, FLASHER 1	1					
29	20P–H334E–00	.CABLE COMPLETA .CORD ASS'Y	1					
30	20P–H3618–00	.PLACA .PLATE	1					
31	20P–H213A–00	.TORNILLO ACCESORIO .SCREW, FITTING	1					
32	20P–H3333–00	.TORNILLO ACCESORIO DE LENTE .SCREW, LENS FITTING	1					
33	20P–H2133–00	.TORNILLO ACCESORIO .SCREW, FITTING	1					
34	5YY–H3318–10	SOPORTE DE DESTELLADOR 1 STAY, FLASHER 1	2					

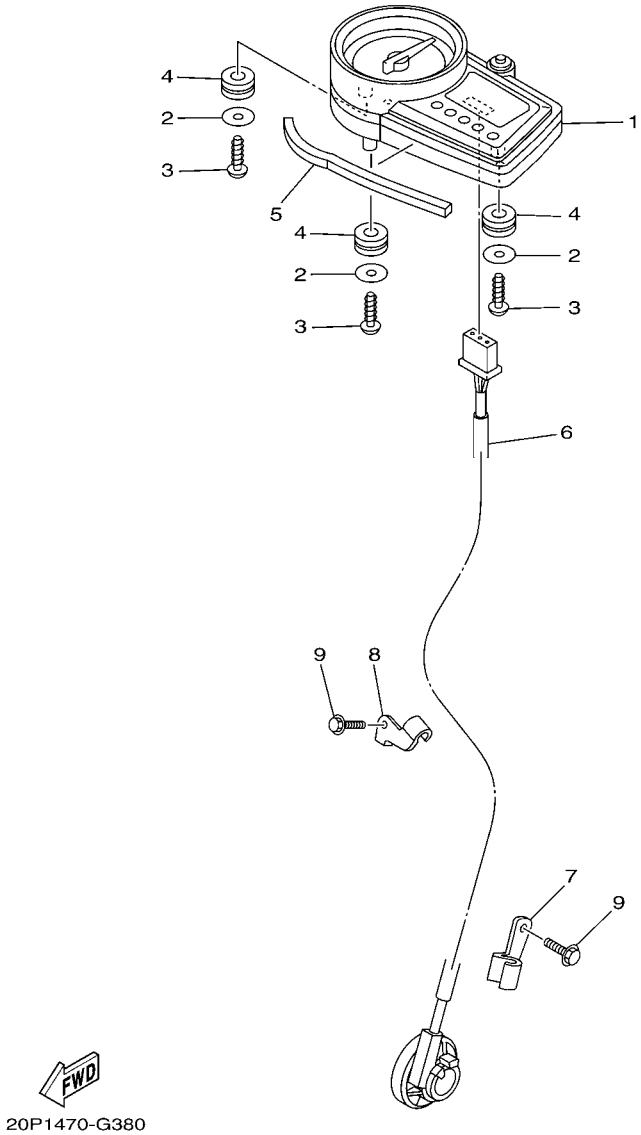

FIG. 38 MEDIDOR METER

REF. Nº	CODIGO Nº PART NO.	DESCRIPCION DESCRIPTION	54C1					OBSERVACIONES REMARKS
1	20P–H3500–01	METRO COMPLETO METER ASSY	1					
2	90201–05036	ARANDELA PLANA WASHER, PLATE	3					
3	97707–50016	TORNILLO SCREW, TRUSS HEAD TAPPING	3					
4	90480–14816	TAPON GROMMET	3					
5	20P–H3592–00	AMORTIGUADOR DAMPER	1					
6	20P–H3755–00	SENSOR DE VELOCI SENSOR, SPEED	1					
7	20P–H3595–00	GRAMPA CLAMP	1					
8	20P–H3596–00	GRAMPA CLAMP	1					
9	95027–06014	PERNO, DE BRIDA BOLT, FLANGE	2					

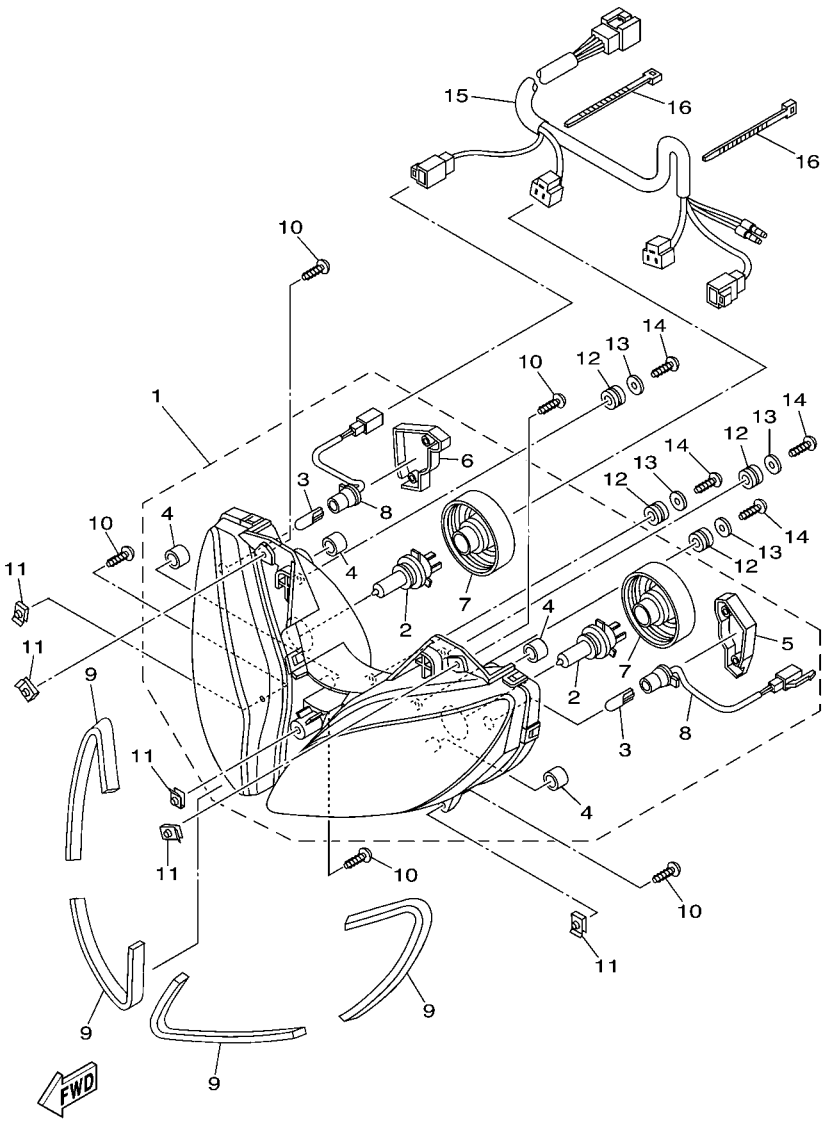

FIG. 39 FARO DELANTERO HEADLIGHT

REF. Nº	CODIGO Nº PART NO.	DESCRIPCION DESCRIPTION	54C1					OBSERVACIONES REMARKS
1	54C–H4300–00	FARO DELANTERO COMPLETO HEADLIGHT ASSY	1					
2	20P–H4314–00	.AMPOLLETA (12V-35/35W) .BULB (12V-35/35W)	2					
3	20P–H4347–00	.AMPOLLETA (12V-5W) .BULB (12V-5W)	2					
4	20P–H4378–00	.TAPA .CAP	4					
5	20P–H4544–10	.CUBIERTA .COVER	1					
6	20P–H4544–00	.CUBIERTA .COVER	1					
7	20P–H4397–00	.CUBIERTA DE ENCASTRE .COVER, SOCKET	2					
8	20P–H4312–00	.CABLE COMPLETA .CORD ASSY	2					
9	20P–H4345–00	AMORT DE FARO DELANTERO DAMPER, HEADLIGHT	4					
10	97707–50016	TORNILLO SCREW, TRUSS HEAD TAPPING	5					
11	90183–05042	TUERCA DE RESORTE NUT, SPRING	5					
12	90480–14229	TAPON GROMMET	4					
13	90201–05036	ARANDELA PLANA WASHER, PLATE	4					
14	97707–50016	TORNILLO SCREW, TRUSS HEAD TAPPING	4					
15	54C–H4359–00	CABLE DE FARO DELANTERO CORD, HEADLIGHT	1					
16	90464–36800	BRIDA CLAMP	2					

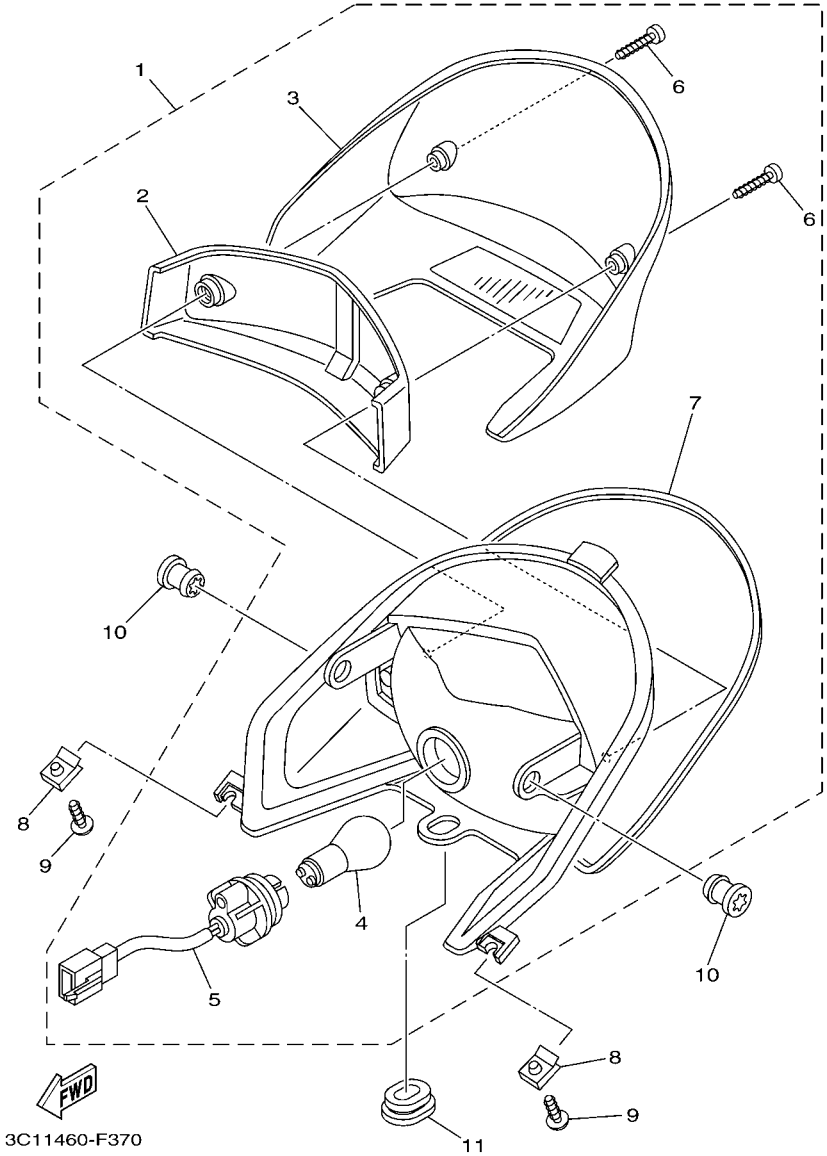

FIG. 40 LUZ DE COLA — TAILLIGHT

REF. Nº	CODIGO Nº PART NO.	DESCRIPCION DESCRIPTION	54C1					OBSERVACIONES REMARKS
1	3C1–H4710–03	UNIDAD FARO TRASERO COMPL. TAILLIGHT UNIT ASSY	1					
2	3C1–H4721–01	.LENTE DE FARO TRASERO .LENS, TAILLIGHT	1					
3	3C1–H4733–00	.LENTE DE FARO TRASERO .LENS, TAILLIGHT	1					
4	3C1–H4714–00	.BOMBILLA (12V-21/5W) .BULB (12V-21/5W)	1					
5	3C1–H4735–00	.CABLE COMPLETA .CORD ASSY	1					
6	3C1–H4724–00	.TORNILLO ACCESORIO DE LENTE .SCREW, LENS FITTING	2					
7	3C1–H4704–00	.EMPAQUETADURA DE LUZ DE COLA .GASKET, TAILLIGHT	1					
8	90183–05042	TUERCA DE RESORTE NUT, SPRING	2					
9	97707–50014	TORNILLO SCREW, TRUSS HEAD TAPPING	2					
10	90480–13810	TAPON GROMMET	2					
11	90480–01558	TAPON GROMMET	1					

FIG. 41 INTERRUPTOR DE MANILLAR&PALANC HANDLE SWITCH & LEVER

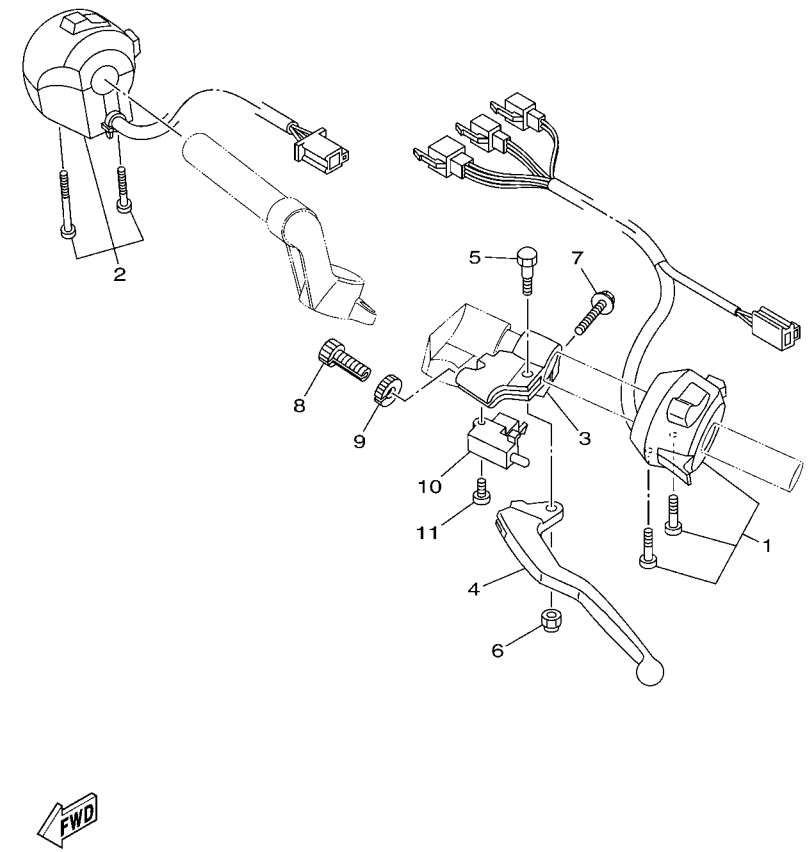

REF. Nº	CODIGO Nº PART NO.	DESCRIPCION DESCRIPTION	54C1					OBSERVACIONES REMARKS
1	20P–H3972–00	INTERRUPTOR DE MANIJA 4 SWITCH, HANDLE 4	1					
2	20P–H3963–00	INTERRUPTOR DE MANIJA 3 SWITCH, HANDLE 3 (RIGHT)	1					
3	20P–H2911–00	SOPORTE DE LEVA 1 HOLDER, LEVER 1	1					
4	20P–H3912–00	PALANCA 1 LEVER 1	1					
5	20P–H3945–00	PERNO DE PALANCA BOLT, LEVER	1					
6	20P–H331B–00	TUERCA DE RESORTE NUT, SPRING	1					
7	20P–H3546–00	PERNO BOLT	1					
8	20P–H3951–00	PERNO DE CABLE DE AJUSTE BOLT, CABLE ADJUSTING	1					
9	20P–H3927–00	TUERCA DE AJUSTE NUT, ADJUSTING	1					
10	3YX–82917–01	INTERRUPTOR SWITCH	1					
11	98707–03020	TORNILLO DE CABEZA PLANA SCREW, FLAT HEAD	1					

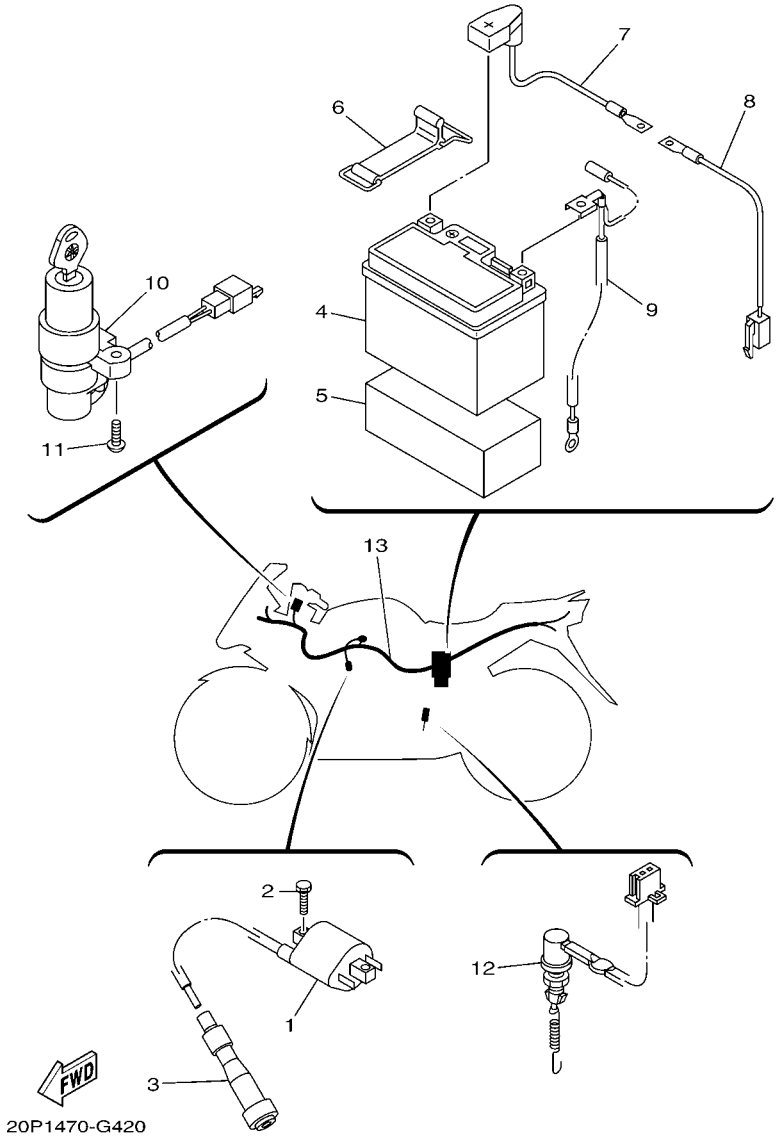

FIG. 42 EQUIPO ELECTRICO 1 ELECTRICAL 1

REF. Nº	CODIGO Nº PART NO.	DESCRIPCION DESCRIPTION	54C1					OBSERVACIONES REMARKS
1	1S4–82310–00	BOBINA DE ENCENDIDO COMPLETA IGNITION COIL ASSY	1					
2	97007–06016	PERNO BOLT	2					
3	20P–H2370–00	TAPON DE BUJIA COMPLT PLUG CAP ASSY	1					
4	20P–H2100–00	BATERIA COMPLETA(GS YTZ5S MF) BATTERY ASSY (GS YTZ 5S MF)	1					
5	20P–H2121–00	BASE DE BATERIA PAD, BATTERY	1					
6	20P–F811G–00	CINTA BAND	1					
7	20P–H2115–00	CABLE CONDUCTOR POSITIVO WIRE, PLUS LEAD	1					
8	20P–H2509–00	CABLE SUBCONDUCTOR WIRE, SUB LEAD	1					
9	3C1–H2116–00	CABLE CONDUCTOR NEGATIVO WIRE, MINUS LEAD	1					
10	20P–H2501–00	LLAVE DE IGNICION COMPLT MAIN SWITCH STEERING LOCK	1					
11	90149–06002	TORNILLO DE REGLAJE SCREW	2					
12	20P–H2530–00	INTERRUPTOR DE PARADA COMPLETO STOP SWITCH ASSY	1					
13	20P–H2590–00	CONJUNTO DE CABLES WIRE HARNESS ASSY	1					

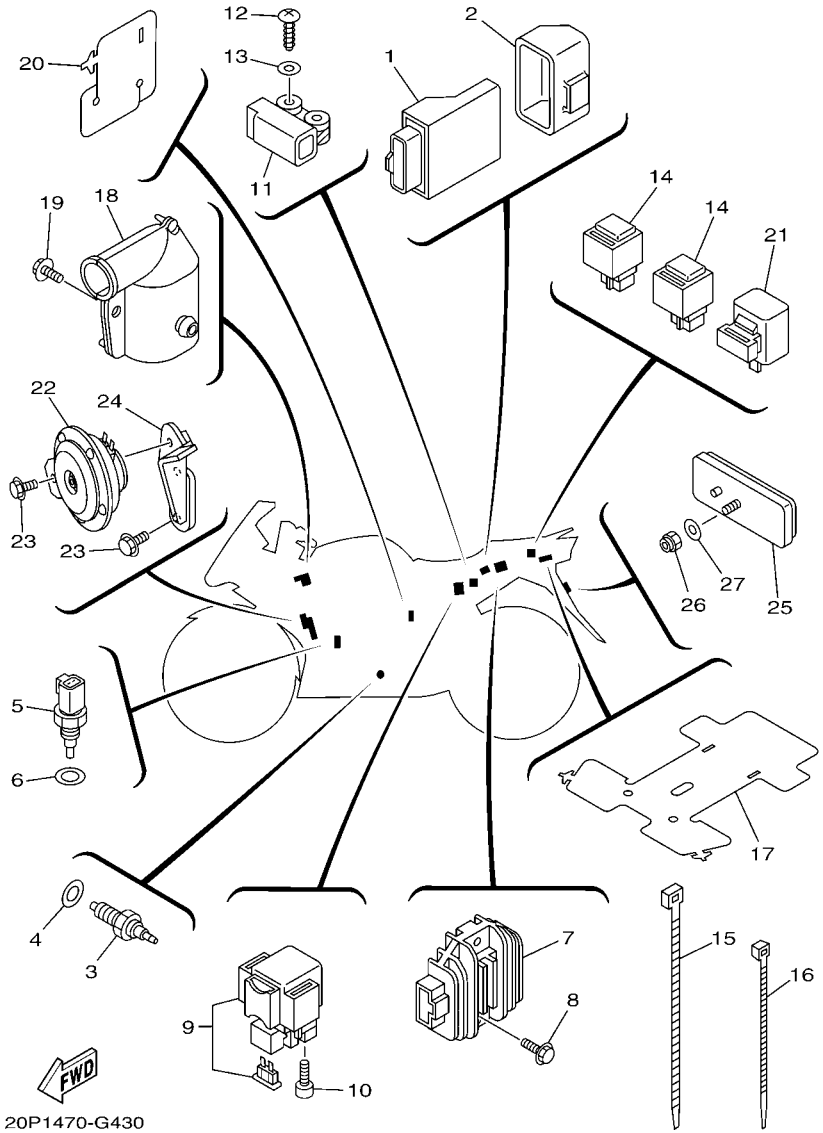

FIG. 43 EQUIPO ELECTRICO 2 ELECTRICAL 2

REF. Nº	CODIGO Nº PART NO.	DESCRIPCION DESCRIPTION	54C1					OBSERVACIONES REMARKS
1	20P–8591A–00	UNIDAD CONTROL ENGINE CONTROL UNIT ASSY	1					
2	20P–H5546–00	BANDA BAND	1					
3	3C1–H2540–00	INTERRUPTOR NEUTRAL COMPL NEUTRAL SWITCH ASSY	1					
4	90430–10148	JUNTA GASKET	1					
5	5YP–85790–00	TERMICA SENSORIO THERMOSENSOR ASSY	1					
6	90430–12801	JUNTA GASKET	1					
7	3C1–H1960–00	RECTIFICADOR Y REGULADOR RECTIFIER & REGULATOR ASSY	1					
8	95807–06020	TORNILLO BOLT, FLANGE	2					
9	20P–H1940–00	CONJUNTO ARRANCADOR RELEVO STARTER RELAY ASSY	1					
10	91317–05008	PERNO BOLT	2					
11	3C1–H2576–00	SENSOR ANGULO DE INCLINATION SENSOR, LEAN ANGLE	1					
12	97707–40012	TORNILLO ROSCA HEMBRA SCREW, TAPPING	2					
13	90201–047A2	ARANDELA PLANA WASHER, PLATE	2					
14	20P–H1950–00	RELE COMPLETO RELAY ASSY	2					
15	90464–50800	BRIDA CLAMP	1					
16	90464–36800	BRIDA CLAMP	10					
17	20P–H2599–00	CUBIERTA DE CONECTOR COVER, CONNECTER	1					
18	20P–H246B–00	CUBIERTA 1 COVER 1	1					
19	90119–06054	TORNILLO CON ARANDELA BOLT, WITH WASHER	1					
20	20P–H2589–00	PROTECTOR DE ARNES DE CABLE PROTECTER, WIRE HARNESS	1					
21	5TS–H3350–01	RELE DE DESTELLADOR COMPL. FLASHER RELAY ASSY	1					
22	20P–H3371–00	BOCINA HORN	1					
23	95807–06012	TORNILLO BOLT, FLANGE	3					
24	20P–F134Y–00	SOPORTE DE BOCINA STAY, HORN	1					
25	5US–H5110–00	REFLECTOR COMPLETO REFLECTOR ASSY	1					
26	95607–05100	TUERCA AUTOBLOCANTE NUT, U	1					
27	90201–05725	ARANDELA PLANA WASHER, PLATE	1					

INDICE NUMERICO
NUMERICAL INDEX

CODIGO Nº PART NO.	REF. Nº
3C1–11454–00	2 – 21
3C1–11531–00	2 – 22
3C1–11536–00	2 – 15
3C1–11603–00	2 – 14
3C1–11681–00	2 – 3
5YP–12117–00	3 – 6
3C1–12159–00	3 – 9
	3 – 12
5YP–12411–00	6 – 1
3C1–13770–10	8 – 9
3C1–13971–00	8 – 11
5JW–14104–00	8 – 14
2S5–1410H–00	8 – 15
5CA–14147–00	8 – 10
1S4–14216–00	8 – 16
5GM–14766–00	9 – 8
3C1–16193–00	13 – 2
3C1–16357–02	13 – 24
3C1–16380–01	13 – 22
183–23411–00	21 – 2
183–23412–00	21 – 3
5TL–2341E–00	21 – 4
164–23462–00	22 – 24
5LK–23873–01	21 – 1
5LK–23875–00	22 – 23
5MT–25398–00	25 – 8
5MT–25398–10	25 – 8
5MT–25398–20	25 – 8
36Y–2589H–00	30 – 6
2C0–27435–00	31 – 14
	31 – 27
5D7–8183G–00	36 – 3
1S4–82310–00	42 – 1
3YX–82917–01	41 – 10
5YP–85790–00	43 – 5
20P–8591A–00	43 – 1
1S7–E1102–00	1 – 1
1S7–E111F–00	4 – 9
1S7–E1133–10	1 – 2
20P–E1166–00	8 – 34
3C1–E1181–01	1 – 19
1S7–E1185–01	5 – 4
1S7–E1191–00	1 – 6
1S7–E1193–00	1 – 14
1S7–E1196–00	5 – 5
3C1–E1311–00	1 – 23
1S7–E1351–00	1 – 24
3C1–E1400–00	2 – 1

CODIGO Nº PART NO.	REF. Nº
3C1–E1412–00	2 – 2
3C1–E1422–00	2 – 6
3C1–E1496–00	2 – 16
3C1–E1549–00	2 – 7
3C1–E1631–00	2 – 11
3C1–E1633–00	2 – 12
3C1–E1651–10	2 – 5
1S7–E1951–00	5 – 8
1S7–E1952–01	5 – 9
1S7–E2111–00	3 – 1
3C1–E2113–00	3 – 4
3S0–E2118–00	3 – 5
2S6–E2119–00	3 – 3
1S7–E2121–00	3 – 2
5YP–E2126–00	3 – 7
1S7–E2151–00	3 – 8
1S7–E2156–00	3 – 14
5YP–E2157–00	4 – 8
1S7–E2161–00	3 – 11
3C1–E2170–00	4 – 1
2P2–E2210–00	4 – 17
5MX–E2213–00	4 – 18
5YP–E2231–00	4 – 12
3C1–E2241–00	4 – 13
3C1–E2256–00	4 – 16
3C1–E2280–00	4 – 6
1S7–E2288–00	4 – 7
5YP–E2405–00	6 – 5
20P–E240A–00	6 – 4
1S7–E2413–00	6 – 2
3C1–E2422–00	5 – 1
1S7–E2428–00	5 – 3
3C1–E2443–00	5 – 13
1S7–E2450–00	5 – 7
20P–E2467–00	6 – 14
20P–E2481–00	6 – 15
20P–E2482–00	6 – 17
5ST–E2590–00	6 – 8
5YP–E2671–00	6 – 7
5YP–E2675–00	6 – 6
3C1–E3300–00	7 – 1
3C1–E3324–00	7 – 8
3C1–E3327–00	7 – 13
1S7–E3411–00	7 – 4
1S7–E3440–00	7 – 7
3C1–E3447–00	7 – 9
3C1–E3542–00	8 – 3
3C1–E3556–00	8 – 2

CODIGO Nº PART NO.	REF. Nº
5MX–E3575–01	8 – 17
3C1–E3585–00	8 – 1
3C1–E3586–00	8 – 6
3C1–E3750–00	8 – 13
3C1–E3907–00	23 – 16
20P–E4411–00	8 – 18
20P–E4412–00	8 – 19
20P–E4419–00	8 – 28
20P–E441J–00	8 – 29
20P–E443E–00	8 – 24
20P–E4450–00	8 – 20
3C1–E4452–00	8 – 22
20P–E4453–00	8 – 21
20P–E4485–00	8 – 26
21C–E4613–00	9 – 14
20P–E4629–00	9 – 6
20P–E4703–00	9 – 1
20P–E4728–00	9 – 2
20P–E4747–00	17 – 8
20P–E4799–00	9 – 7
1S7–E482K–00	1 – 8
1S7–E4840–00	1 – 9
20P–E4877–00	8 – 40
20P–E4881–00	8 – 43
20P–E4882–00	8 – 36
20P–E4883–00	8 – 45
1S7–E4890–00	1 – 10
3C1–E5150–01	10 – 1
1S7–E5351–00	7 – 3
3C1–E5362–00	11 – 16
3C1–E5411–00	11 – 1
20P–E5418–00	11 – 9
3C1–E5421–00	11 – 11
3C1–E5441–00	4 – 19
3C1–E5451–00	11 – 2
3C1–E5461–00	11 – 12
3C1–E5514–00	12 – 1
3C1–E5521–00	12 – 2
3C1–E5524–00	12 – 5
5YP–E5580–00	12 – 8
5HV–E5583–00	12 – 9
3C1–E5598–00	4 – 15
5YP–E5614–00	12 – 10
20P–E5666–00	14 – 30
3C1–E6111–00	13 – 1
3C1–E6135–00	13 – 20
3C1–E6144–00	13 – 18
3C1–E6150–00	13 – 5

CODIGO Nº PART NO.	REF. Nº
3C1–E6154–00	13 – 6
3C1–E6307–00	13 – 10
3C1–E6324–00	13 – 12
20P–E6331–00	13 – 11
20P–E6333–00	13 – 14
3C1–E6337–00	13 – 15
3C1–E6344–00	13 – 19
3C1–E6345–00	13 – 23
3C1–E6351–00	13 – 13
20P–E6356–00	13 – 17
3C1–E6358–00	13 – 16
3C1–E6371–00	13 – 7
3C1–E6383–00	13 – 9
3C1–E6384–00	13 – 8
3C1–E7121–00	14 – 7
5D7–E7131–00	14 – 5
3C1–E7151–00	14 – 2
5D7–E7161–00	14 – 6
3C1–E7211–00	14 – 13
3C1–E7221–00	14 – 21
3C1–E7231–00	14 – 19
3C1–E7241–00	14 – 18
3C1–E7251–00	14 – 15
5D7–E7261–00	14 – 20
3C1–E7402–00	14 – 12
5D7–E7411–00	14 – 1
3C1–E7456–00	14 – 28
3C1–E7471–00	14 – 10
3C1–E8101–00	16 – 4
20P–E8111–00	16 – 9
20P–E8112–00	16 – 14
20P–E8113–00	16 – 10
	31 – 32
20P–E8115–00	16 – 11
3C1–E8119–00	16 – 2
3C1–E8140–00	16 – 1
3C1–E8337–00	16 – 3
3C1–E8511–00	15 – 2
3C1–E8512–00	15 – 3
3C1–E8513–00	15 – 4
3C1–E8531–00	15 – 5
5D7–E8540–00	15 – 1
20P–F1110–00	17 – 1
20P–F117K–00	24 – 11
20P–F117V–00–P0	34 – 20
20P–F117V–00–P1	34 – 20
20P–F117V–00–P2	34 – 20
20P–F1338–00	17 – 12

CODIGO Nº PART NO.	REF. Nº
20P–F134Y–00	43 – 24
20P–F144G–00	31 – 35
20P–F1511–00–P0	18 – 1
20P–F1511–00–P1	18 – 1
20P–F1511–00–P2	18 – 1
20P–F1611–00	18 – 7
20P–F1621–00	18 – 8
20P–F1731–00–P1	19 – 17
20P–F1731–00–P2	19 – 17
20P–F173E–00	19 – 2
	19 – 4
20P–F173E–10	19 – 2
	19 – 4
20P–F173E–20	19 – 2
	19 – 4
20P–F1741–00–P1	19 – 19
20P–F1741–00–P2	19 – 19
20P–F1749–00	33 – 9
20P–F174G–00	19 – 18
	19 – 20
20P–F1773–00	33 – 19
20P–F1823–00	19 – 16
20P–F1828–00	19 – 12
20P–F1871–00	19 – 9
20P–F1875–00	19 – 11
20P–F2110–00	20 – 1
20P–F2129–00	20 – 4
20P–F2141–00	20 – 5
20P–F2151–00	20 – 7
20P–F217A–00	20 – 8
20P–F217F–00	20 – 12
20P–F2184–00	20 – 3
20P–F2210–00	20 – 18
20P–F2311–00	20 – 15
20P–F2327–00	17 – 11
20P–F3100–00	22 – 1
20P–F3110–00	22 – 12
20P–F3111–00	22 – 27
20P–F3114–00	22 – 26
20P–F3118–00	22 – 21
20P–F3125–00	22 – 3
	22 – 8
20P–F3126–00	22 – 2
20P–F3136–00	22 – 7
20P–F3141–00	22 – 19
20P–F3144–00	22 – 6
	22 – 11
20P–F3145–00	22 – 4

CODIGO Nº PART NO.	REF. Nº
20P–F3145–00	22 – 9
20P–F3149–00	22 – 20
20P–F3151–00	22 – 14
20P–F3156–00	22 – 5
	22 – 10
20P–F3157–00	22 – 15
20P–F3158–00	22 – 17
20P–F3170–00	22 – 13
20P–F3173–00	22 – 16
20P–F3181–00	22 – 18
20P–F3340–00	22 – 22
20P–F3346–00	22 – 25
20P–F3416–00	21 – 5
20P–F3418–00	21 – 8
20P–F3435–00	21 – 9
20P–F3469–00	29 – 5
	34 – 19
20P–F411F–00	23 – 4
5YY–F413B–00	23 – 2
20P–F4188–00	23 – 12
20P–F4191–00	23 – 3
20P–F4312–00	23 – 20
20P–F4486–00	23 – 18
20P–F4491–00	23 – 17
20P–F4730–00	24 – 1
20P–F4741–00	24 – 2
20P–F4773–00–P0	24 – 8
20P–F4773–00–P1	24 – 8
20P–F4773–00–P2	24 – 8
20P–F4780–00	24 – 4
20P–F478E–00	24 – 7
20P–F4792–00	24 – 5
20P–F510C–00	25 – 2
20P–F5168–00	25 – 1
20P–F5181–00	25 – 10
20P–F5186–00	25 – 9
20P–F530S–00	27 – 2
20P–F5338–00	27 – 1
20P–F5364–00	27 – 4
20P–F5366–00–33	27 – 6
20P–F5377–00	27 – 9
20P–F5381–00	27 – 16
20P–F5383–00	27 – 17
20P–F5386–00	27 – 13
20P–F5388–00	27 – 19
20P–F5389–00	27 – 20
20P–F5442–00	27 – 10
3C1–F580U–00	26 – 3

INDICE NUMERICO
NUMERICAL INDEX

CODIGO Nº PART NO.	REF. Nº
20P–F580W–00	28 – 3
4ML–F582A–50	32 – 5
20P–F582U–00	26 – 1
20P–F582W–00	28 – 1
3C1–F583T–01	30 – 2
20P–F583V–01	32 – 1
20P–F5852–00	32 – 9
3C1–F5852–00	30 – 5
20P–F5854–00	32 – 11
3RW–F5854–00	30 – 4
3C1–F5855–00	30 – 8
20P–F585B–00	32 – 10
2VN–F5866–00	32 – 6
3RW–F5867–00	30 – 7
20P–F5872–00	30 – 1
20P–F5873–00	32 – 22
20P–F5876–00	30 – 19
20P–F587A–00	28 – 11
20P–F5886–00	30 – 17
20P–F5887–00	32 – 25
20P–F5894–00	32 – 8
20P–F5895–00	32 – 14
3FV–F589A–00	32 – 15
3SP–F5914–51	28 – 8
5YP–F5917–00	26 – 8
4S3–F5919–00	28 – 6
5YP–F5919–00	26 – 10
5YP–F5924–00	26 – 11
5YP–F5925–01	26 – 9
5YP–F5937–00	26 – 7
5YP–F5939–00	26 – 13
20P–F6121–00	29 – 1
20P–F6122–00	29 – 2
20P–F622F–00	29 – 12
20P–F622H–00	29 – 11
20P–F6240–00	29 – 6
20P–F6241–00	29 – 8
20P–F6242–00	29 – 7
20P–F6246–00	29 – 9
20P–F6257–00	29 – 10
20P–F6280–00	34 – 13
20P–F6290–00	34 – 14
20P–F6311–00	29 – 14
20P–F6315–00	29 – 15
20P–F6335–00	29 – 16
20P–F6372–00	29 – 17
3C1–F7111–00	31 – 46
3C1–F7112–00	31 – 47

CODIGO Nº PART NO.	REF. Nº
4YY–F7114–00	31 – 52
20P–F7211–00	31 – 31
2YK–F7222–00	32 – 4
4TT–F7238–00	32 – 16
20P–F7311–00	31 – 1
20P–F7411–00	31 – 10
	31 – 23
20P–F7431–00	31 – 40
20P–F7441–00	31 – 41
20P–F7442–00	31 – 8
20P–F7443–00	31 – 21
20P–F7445–00	31 – 19
20P–F7446–00	31 – 38
20P–F7451–00	31 – 9
20P–F7461–00	31 – 22
20P–F8100–00	17 – 13
20P–F811G–00	42 – 6
20P–F8284–00	17 – 5
20P–F831U–00	33 – 15
20P–F832U–00	33 – 16
20P–F8356–00	34 – 10
20P–F835G–00–P0	34 – 6
20P–F835G–00–P1	34 – 6
20P–F835G–00–P2	34 – 6
20P–F836B–00	19 – 25
20P–F836M–00	33 – 17
20P–F836R–00	34 – 2
20P–F8371–00	34 – 5
20P–F837L–00	34 – 41
20P–F837M–00	34 – 42
20P–F8381–00	34 – 1
20P–F8391–00	34 – 31
20P–F8391–10	34 – 31
20P–F8391–20	34 – 31
20P–F8392–00	34 – 35
20P–F8392–10	34 – 35
20P–F8392–20	34 – 35
20P–F8393–10	34 – 32
20P–F8394–10	34 – 36
20P–F8398–00	34 – 33
20P–F8399–00	34 – 37
20P–F8483–00	34 – 15
20P–F8484–00	34 – 16
20P–F848H–00	33 – 22
20P–F848K–00	33 – 23
20P–F848L–00	33 – 24
20P–F848M–00	33 – 12
20P–F848N–00	33 – 13

CODIGO Nº PART NO.	REF. Nº
20P–F848P–00	33 – 14
3C1–H1410–01	35 – 2
3C1–H1450–00	35 – 1
5D7–H1800–00	36 – 1
3AY–H1801–00	36 – 2
3AY–H1828–00	36 – 5
3AY–H182M–00	36 – 4
20P–H1940–00	43 – 9
20P–H1950–00	43 – 14
3C1–H1960–00	43 – 7
20P–H2100–00	42 – 4
20P–H2115–00	42 – 7
3C1–H2116–00	42 – 9
20P–H2121–00	42 – 5
20P–H2131–00	24 – 3
20P–H2133–00	37 – 8
	37 – 16
	37 – 25
	37 – 33
20P–H213A–00	37 – 6
	37 – 14
	37 – 23
	37 – 31
20P–H2370–00	42 – 3
20P–H246B–00	43 – 18
20P–H2501–00	42 – 10
20P–H2509–00	42 – 8
20P–H2530–00	42 – 12
3C1–H2540–00	43 – 3
3C1–H2576–00	43 – 11
20P–H2589–00	43 – 20
20P–H2590–00	42 – 13
20P–H2599–00	43 – 17
20P–H2911–00	41 – 3
20P–H3310–00	37 – 1
20P–H3311–00	37 – 2
	37 – 10
	37 – 19
	37 – 27
20P–H3318–00	37 – 3
	37 – 11
	37 – 20
	37 – 28
5YY–H3318–10	37 – 17
	37 – 34
20P–H331B–00	41 – 6
20P–H331E–00	37 – 4
20P–H3320–00	37 – 9

CODIGO Nº PART NO.	REF. Nº
20P–H332E–00	37 – 12
20P–H3330–00	37 – 18
20P–H3333–00	37 – 7
	37 – 15
	37 – 24
	37 – 32
20P–H333E–00	37 – 21
20P–H3340–00	37 – 26
20P–H334E–00	37 – 29
5TS–H3350–01	43 – 21
20P–H3371–00	43 – 22
20P–H3500–01	38 – 1
20P–H3546–00	41 – 7
20P–H3592–00	38 – 5
20P–H3595–00	38 – 7
20P–H3596–00	38 – 8
20P–H3618–00	37 – 5
	37 – 13
	37 – 22
	37 – 30
20P–H3755–00	38 – 6
20P–H3912–00	41 – 4
3C1–H3922–00	30 – 9
20P–H3927–00	41 – 9
20P–H3945–00	41 – 5
20P–H3951–00	41 – 8
20P–H3963–00	41 – 2
20P–H3972–00	41 – 1
5BP–H3980–10	30 – 12
54C–H4300–00	39 – 1
20P–H4312–00	39 – 8
20P–H4314–00	39 – 2
20P–H4345–00	39 – 9
20P–H4347–00	39 – 3
54C–H4359–00	39 – 15
20P–H4378–00	39 – 4
20P–H4397–00	39 – 7
20P–H4544–00	39 – 6
20P–H4544–10	39 – 5
3C1–H4704–00	40 – 7
3C1–H4710–03	40 – 1
3C1–H4714–00	40 – 4
3C1–H4721–01	40 – 2
3C1–H4724–00	40 – 6
3C1–H4733–00	40 – 3
3C1–H4735–00	40 – 5
5US–H5110–00	43 – 25
20P–H5546–00	43 – 2

CODIGO Nº PART NO.	REF. Nº
5P0–W0041–00	30 – 3
20P–W0042–00	32 – 2
4C9–W0045–00	26 – 12
20P–W0046–00	28 – 9
3C1–W0047–00	26 – 5
3GD–W0047–00	28 – 5
4S3–W0048–00	28 – 7
5TL–W0048–00	26 – 6
3C1–W0057–00	26 – 4
4S3–W0057–00	28 – 4
20P–WF461–00	23 – 13
20P–WF478–00	24 – 10
54C–XF117–00–P0	34 – 22
54C–XF117–10–P1	34 – 22
54C–XF117–20–P2	34 – 22
20P–XF171–00	19 – 1
20P–XF171–00–P0	19 – 24
20P–XF171–00–P1	19 – 24
20P–XF171–10	19 – 1
20P–XF171–20	19 – 1
20P–XF171–20–P2	19 – 24
20P–XF172–00	19 – 3
20P–XF172–10	19 – 3
20P–XF172–20	19 – 3
20P–XF173–00–P0	19 – 17
20P–XF174–00–P0	19 – 19
54C–XF411–00–P0	23 – 1
54C–XF411–10–P1	23 – 1
54C–XF411–20–P2	23 – 1
20P–XF836–00–P0	34 – 30
20P–XF836–00–P1	34 – 30
20P–XF836–20–P1	34 – 30
20P–XF838–00–33	33 – 1
20P–XF838–00–P0	33 – 1
20P–XF838–20–P1	33 – 1
20P–XF839–00–33	33 – 3
20P–XF839–00–P0	33 – 3
20P–XF839–20–P1	33 – 3
20P–XF83A–00–P0	34 – 34
20P–XF83A–00–P1	34 – 34
20P–XF83A–20–P1	34 – 34
90105–08850	1 – 16
90105–10006	21 – 11
90105–10082	26 – 14
90105–10123	17 – 3
90105–10311	20 – 11
90105–10323	17 – 2
90105–106A7	31 – 3

CODIGO Nº PART NO.	REF. Nº
90109–06183	18 – 10
	19 – 10
90109–063F1	18 – 9
90109–06577	30 – 10
90109–08015	28 – 2
90109–083A8	34 – 11
90110–05112	23 – 14
90110–06215	23 – 10
90110–06287	23 – 8
90110–08199	31 – 18
	31 – 37
90110–10012	31 – 16
	31 – 29
90111–05003	34 – 29
	34 – 40
	34 – 43
90111–06117	18 – 4
	33 – 5
	34 – 25
90111–08057	26 – 2
90116–08552	27 – 11
90119–06044	19 – 5
	19 – 21
	19 – 26
	32 – 21
90119–06051	8 – 33
90119–06054	43 – 19
90119–06233	18 – 6
90119–06234	23 – 7
90149–06002	42 – 11
90149–06264	9 – 5
90149–06829	4 – 14
90150–05024	34 – 3
90153–06803	1 – 3
	1 – 25
90159–06033	24 – 12
90163–05803	8 – 23
90170–05302	3 – 10
	3 – 13
90170–10405	2 – 30
90179–05523	34 – 4
90179–10023	20 – 13
90179–10247	17 – 4
90179–12802	13 – 4
90179–14001	13 – 21
90179–25615	21 – 6
90183–05042	18 – 11
	33 – 21

INDICE NUMERICO
NUMERICAL INDEX

CODIGO Nº PART NO.	REF. Nº
90183–05042	34 – 39
	39 – 11
	40 – 8
90183–05076	33 – 10
	34 – 7
	34 – 28
90183–06023	8 – 32
90201–047A2	43 – 13
90201–05036	38 – 2
	39 – 13
90201–05725	43 – 27
90201–06072	6 – 11
90201–08083	32 – 18
90201–08609	1 – 17
90201–08612	9 – 17
90201–10066	31 – 17
	31 – 30
90201–10118	30 – 16
	32 – 24
90201–105E8	12 – 3
90201–12019	13 – 3
90201–122H1	35 – 6
90201–15821	2 – 17
90201–163H8	31 – 48
90201–173F4	14 – 23
90201–20814	14 – 22
90201–25290	12 – 7
90202–26142	21 – 7
90208–20003	13 – 29
90209–10020	21 – 12
90209–17285	14 – 3
90209–18208	14 – 16
90214–10800	2 – 18
90215–10284	2 – 29
90240–08124	32 – 17
90240–08800	31 – 12
	31 – 25
	31 – 44
90249–02002	31 – 15
	31 – 28
90280–03017	2 – 10
90282–05031	2 – 28
90338–09802	30 – 13
90338–16008	8 – 30
90338–16148	17 – 10
90338–18122	17 – 9
90338–30802	11 – 20
90340–14805	11 – 5

CODIGO Nº PART NO.	REF. Nº
90340–32810	11 – 7
90387–06023	9 – 4
90387–064W3	6 – 12
90387–06890	23 – 11
90387–06892	23 – 5
90387–068C2	33 – 7
	34 – 18
	34 – 26
90387–068C4	34 – 44
90387–068C8	18 – 2
90387–068S1	8 – 41
90387–07819	20 – 16
90387–08812	17 – 7
90387–10003	31 – 4
90387–10814	20 – 10
90387–15810	2 – 23
90387–17804	14 – 14
90387–22591	29 – 18
90401–10159	30 – 15
	32 – 23
90413–13800	8 – 44
90430–06014	1 – 4
	1 – 13
	1 – 26
90430–09800	8 – 5
90430–10148	43 – 4
90430–12801	43 – 6
90445–08831	19 – 13
90445–08832	19 – 14
90445–12804	6 – 19
90445–16807	31 – 34
90445–21848	31 – 7
	31 – 51
90450–28801	6 – 16
	6 – 18
90450–39804	8 – 39
90464–20003	34 – 8
	34 – 23
90464–25160	23 – 21
	34 – 9
90464–36800	39 – 16
	43 – 16
90464–50800	30 – 20
	43 – 15
90467–08003	19 – 15
90467–08092	8 – 4
90467–09006	23 – 22
90467–10808	6 – 20

CODIGO Nº PART NO.	REF. Nº
90467–12085	32 – 13
90467–12800	8 – 25
90467–13802	8 – 38
90467–13816	8 – 35
90467–15012	8 – 37
90467–16805	8 – 46
90467–20050	8 – 27
90467–23059	8 – 31
90480–01558	19 – 7
	19 – 23
	40 – 11
90480–01559	33 – 20
90480–01803	6 – 13
90480–01811	33 – 8
90480–01870	34 – 12
	34 – 27
90480–12581	9 – 3
90480–12805	18 – 3
90480–13567	19 – 6
90480–13810	40 – 10
90480–14003	33 – 6
	34 – 21
	34 – 24
90480–14229	39 – 12
90480–14816	38 – 4
90480–15363	6 – 9
90480–15483	23 – 6
90480–15549	23 – 9
90480–18859	18 – 5
90501–030A0	12 – 11
90501–06800	15 – 6
90501–12743	31 – 42
90501–16800	2 – 19
90501–18576	7 – 5
90506–20193	31 – 33
90506–28800	31 – 2
90506–35003	31 – 50
90508–183B9	31 – 11
90508–184B0	31 – 24
90508–32837	16 – 5
91317–05008	43 – 10
91317–05010	23 – 15
	23 – 19
91317–06016	35 – 4
91317–06020	4 – 20
	12 – 12
	29 – 4
91317–06025	34 – 17

CODIGO Nº PART NO.	REF. Nº
91317–06025	35 – 3
91317–06030	29 – 13
91317–06100	1 – 22
91317–08025	29 – 3
91317–08030	21 – 10
91380–06012	9 – 10
91380–06016	9 – 11
91401–20012	16 – 13
	31 – 13
	31 – 26
	31 – 45
	32 – 19
91401–30030	31 – 49
91810–14809	1 – 20
	1 – 21
	10 – 2
	11 – 3
	11 – 13
91811–10005	1 – 7
92012–06010	31 – 36
92012–06016	31 – 20
	31 – 39
92012–08020	32 – 20
92907–06200	16 – 12
92907–10600	31 – 5
92990–06200	9 – 9
92990–06600	9 – 12
93101–10843	11 – 18
93102–12862	13 – 27
93102–12891	16 – 8
93102–20892	14 – 26
93103–10801	5 – 2
93106–17802	20 – 14
93106–20823	25 – 4
93106–22806	27 – 5
93106–26801	27 – 8
93210–09806	4 – 3
93210–11803	1 – 15
93210–11805	2 – 24
93210–13803	2 – 25
93210–148F8	11 – 6
93210–15620	32 – 7
93210–19809	5 – 16
93210–198F9	11 – 17
93210–26805	36 – 6
93210–32807	8 – 7
93210–328G3	11 – 8
93210–34802	7 – 6

CODIGO Nº PART NO.	REF. Nº
93210–54805	7 – 12
93210–84801	5 – 6
93306–000Y3	5 – 10
93306–001X6	4 – 4
93306–003Y7	14 – 24
93306–004XR	14 – 8
93306–054Y5	27 – 7
93306–201X8	25 – 5
93306–203XK	2 – 27
93306–204YL	14 – 25
93306–252Y9	2 – 26
93306–252YH	27 – 3
93306–252YL	14 – 9
93306–301XN	25 – 3
93306–305X7	2 – 9
93306–305YF	2 – 8
93306–906Y0	4 – 2
93310–325X1	12 – 6
93310–528YB	2 – 4
93315–112Y8	13 – 26
93315–31758	20 – 9
93317–21717	20 – 2
93410–20038	14 – 4
93410–22039	14 – 17
93450–16115	2 – 13
93501–04805	31 – 43
93503–16048	13 – 25
93604–08800	2 – 20
93605–06800	4 – 5
93608–30839	16 – 7
93822–14815	14 – 27
93900–00824	25 – 7
	27 – 15
94108–17831	25 – 6
94110–17803	27 – 14
94568–A8096	4 – 11
94568–B8120	27 – 21
94700–00872	1 – 18
94700–00873	1 – 18
95022–06016	11 – 10
95027–06010	4 – 10
	14 – 29
	32 – 26
95027–06012	5 – 12
95027–06014	1 – 11
	38 – 9
95027–06016	30 – 18
95027–06020	1 – 12

CODIGO Nº PART NO.	REF. Nº
95027–06020	6 – 3
95027–06025	5 – 11
	5 – 14
	30 – 14
95027–06050	5 – 15
9502L–06012	7 – 14
9502L–06020	7 – 10
9502L–06040	10 – 6
	11 – 4
	11 – 14
9502L–06045	10 – 4
9502L–06050	11 – 15
9502L–06055	10 – 3
9502L–06070	10 – 5
9502L–06080	7 – 11
9502L–06090	11 – 19
9502N–06020	8 – 8
95301–08700	32 – 3
95607–05100	43 – 26
95607–06100	30 – 11
95607–08200	27 – 12
95607–12200	25 – 11
95607–14200	27 – 18
95617–08620	1 – 5
95617–10100	31 – 6
95707–06500	24 – 6
95707–08500	9 – 15
95707–12500	20 – 6
	35 – 5
95807–06012	43 – 23
95807–06020	43 – 8
95817–06030	8 – 12
95817–08016	17 – 6
95817–08025	9 – 16
95817–08040	9 – 18
95817–10030	28 – 10
95827–06014	20 – 17
95827–06025	6 – 10
95827–08020	24 – 9
97007–06016	42 – 2
97024–06020	16 – 15
97027–06014	8 – 42
97080–06008	9 – 13
97707–40012	43 – 12
97707–50012	33 – 11
	33 – 18
	34 – 38
97707–50014	19 – 8

INDICE NUMERICO
NUMERICAL INDEX

CODIGO Nº PART NO.	REF. Nº
97707–50014	19 – 22
	40 – 9
97707–50016	38 – 3
	39 – 10
	39 – 14
98507–05025	7 – 2
98517–06012	14 – 11
98707–03020	41 – 11
98707–04045	32 – 12
99001–10600	16 – 6
99009–10400	12 – 4
99009–17400	14 – 31
99009–20500	13 – 28
99241–00120	33 – 4
99241–00160	33 – 2
99245–00120	33 – 4
99245–00160	33 – 2
99246–00120	33 – 4
99246–00160	33 – 2

CODIGO Nº PART NO.	REF. Nº

CODIGO Nº PART NO.	REF. Nº

CODIGO Nº PART NO.	REF. Nº

CODIGO Nº PART NO.	REF. Nº

CODIGO Nº PART NO.	REF. Nº