YAMAHA

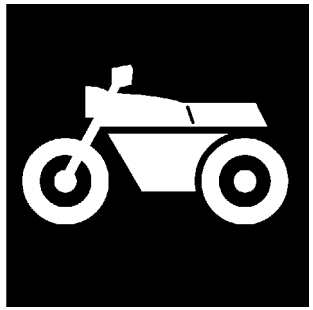

PARTS CATALOGUE

YZ85S (5PA7) USA,CANADA
YZ85 (5PA7) EUROPE,S.AFRICA
YZ85 (5PA9) JAPAN
YZ85LW (5SH7) EUROPE
YZ85LW (5SH9) JAPAN

1C5PA-100E1

(2C5PA-100E1)

YAMAHA GENUINE Parts & Accessories

A2

YZ85S
YZ85/YZ85LW
PARTS CATALOGUE
©2003 by Yamaha Motor Co., Ltd.
1st edition, May 2003
All rights reserved.
Any reprinting or unauthorized use
without the written permission of
Yamaha Motor Co., Ltd.
is expressly prohibited.
Printed in Japan.

A3

A4

FOREWORD

This Parts Catalogue is related to the parts for the model(s) on the cover page. When you are ordering replacement parts, please refer to this Parts Catalogue and quote both part numbers and part names correctly.

1. Modifications or additions which have been made after the issue of the Parts Catalogue will be announced in the Parts News.
   It is advisable that you make the necessary corrections to the Parts Catalogue according to the Parts News.

2. Abbreviations
   The following abbreviations are used in this Parts Catalogue.

   "UR" Use specified parts number.
   "UN" Use as many as needed.
   "AP" Alternate Parts
   "LM" Locally Made (Parts need to be ordered locally)
   "F#" Frame No. (Applicable machine No.)
   "O/S" Over Size

3. The number of components for assembly
   - Parts, which are to be supplied in an assembly, are listed with a dot (.) in front of the part name as shown below.
   - The numeral appearing to the right of each component part indicates the quantity of parts for each assembly unit.

PART NO.	DESCRIPTION	Q'TY	REMARKS
2F5–83310–60	FRONT FLASHER LIGHT ASSY	2	
115–83311–60	.BULB (6V–18W)	1	

4. Applicable colours of graphics are represented in the "REMARKS" as shown below.

PART NO.	DESCRIPTION	Q'TY	REMARKS
2N4–24110–00–X5	FUEL TANK COMP.	2	MXR
3J1–24240–10	.GRAPHIC, FUEL TANK	1	FOR MXR

5. Note that the illustrations for reference in finding parts numbers are not to be used for assembling. When assembling, please use the applicable service manual.

6. The asterisk (*) before a reference number indicates modified items after the first edition.

7. Applicable Serial No.

Engine Serial No.

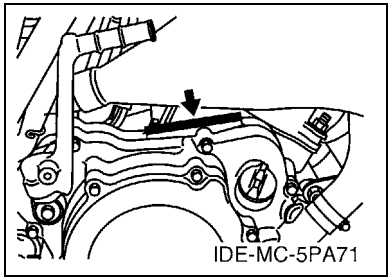

Frame Serial No.

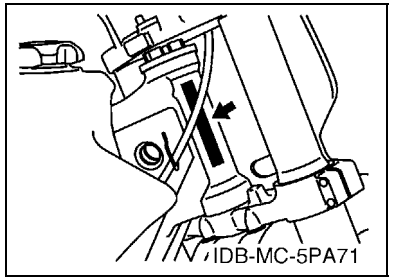

8. Applicable Colour Code (The (*) mark shows Model colour.)

Abbreviation	Colour Name	Colour Code
DPBMC	DEEP PURPLISH BLUE METALLIC C	0564
DPBSE(*)	DEEP PURPLISH BLUE SOLID E	0583

MODEL LABEL

(1) A label called “Model Label” is affixed in the location as indicated in (3) below.
When using this parts catalogue, please be sure to cross–reference the “model code – production code No.” in the catalogue with the “model code – production code No.” indicated on the Model Label affixed onto the product concerned.

(2) “Model Label” Indication

a b ○ xxxx – xxx ● x c	a: Model Type Code b: Production Code No. c: Colouring Type

○ 4TW1–010 ● A

(3) Model Label Affixing Location

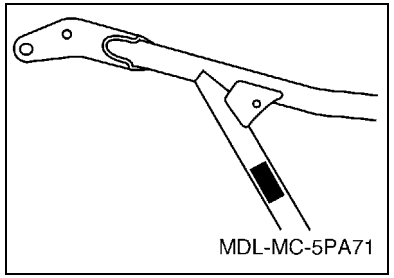

(4) Colouring Information

Model Code	Colouring Type Code	Colour Code	Colour Name	Abbreviation
5PA7	A	0583	DEEP PURPLISH BLUE SOLID E	DPBSE
5PA9	A	0583	DEEP PURPLISH BLUE SOLID E	DPBSE
5SH7	A	0583	DEEP PURPLISH BLUE SOLID E	DPBSE
5SH9	A	0583	DEEP PURPLISH BLUE SOLID E	DPBSE

(5) Model Code – Production Code Number of Model Listed in This Parts Catalogue

Model Code	Production Code No.	Country (destination)	Model Code	Production Code No.	Country (destination)
5PA7	010	U.S.A.			
	020	CANADA			
	030	GERMANY			
	040	SPAIN			
	050	FRANCE			
	060	UNITED KINGDOM			
	070	ITALY			
	090	SWEDEN			
	100	SOUTH AFRICA			
5PA9	010	JAPAN			
5SH7	020	GERMANY			
	030	SPAIN			
	040	FRANCE			
	050	UNITED KINGDOM			
	060	ITALY			
	070	SWEDEN			
5SH9	010	JAPAN			

CONTENTS

ENGINE

CYLINDER B2
CRANKSHAFT & PISTON B3
WATER PUMP B4
RADIATOR & HOSE B5
INTAKE B6
CARBURETOR B7
EXHAUST B9
CRANKCASE B10
CRANKCASE COVER 1 ..... B11
STARTER B12
CLUTCH B13
TRANSMISSION B14
SHIFT CAM & FORK C2
SHIFT SHAFT C3

CHASSIS

FRAME C4
FENDER C5
SIDE COVER C6
REAR ARM C7
REAR SUSPENSION C9
STEERING C11
FRONT FORK C12
FUEL TANK C15
SEAT D2
FRONT WHEEL D3
FRONT BRAKE CALIPER D4
REAR WHEEL D5
REAR BRAKE CALIPER D7
STEERING HANDLE & CABLE D8
FRONT MASTER CYLINDER D9
STAND & FOOTREST D10
REAR MASTER CYLINDER D11
GENERATOR D12
HANDLE SWITCH & LEVER D13
ELECTRICAL 1 ..... D14
ALTERNATE FOR CHASSIS D15
OPTIONAL PARTS 1 ..... E2

INDEX

NUMERICAL INDEX M1

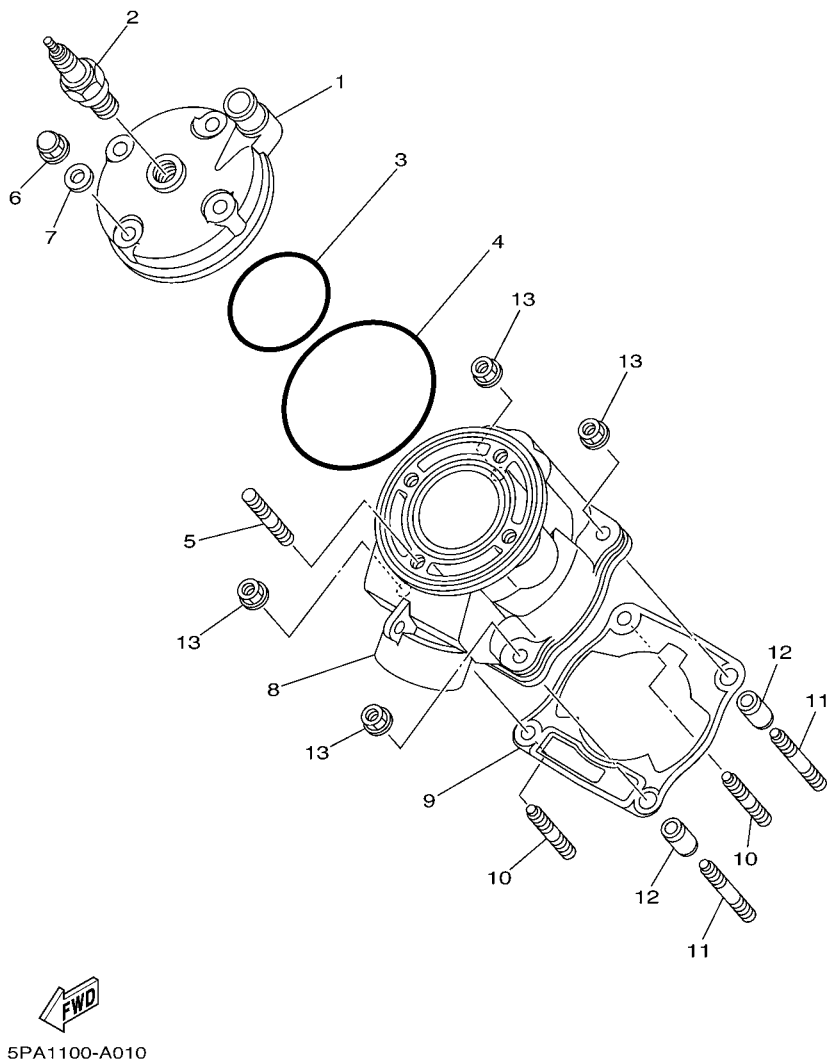

FIG. 1 CYLINDER

REF. NO.	PART NO.	DESCRIPTION	5PA7	5PA9	5SH7	5SH9		REMARKS
1	5PA–11111–00	HEAD, CYLINDER 1	1	1	1	1		
2	94702–00368	PLUG, SPARK (NGK BR10EG)	1		1			
	94709–00368	PLUG, SPARK (NGK BR10EG)		1		1		
3	93210–56459	O-RING	1	1	1	1		
4	93210–84724	O-RING	1	1	1	1		
5	90116–08394	BOLT, STUD	4	4	4	4		
6	90176–08026	NUT, CROWN	4	4	4	4		
7	90201–080L8	WASHER, PLATE	4	4	4	4		
8	5PA–11311–00	CYLINDER 1	1	1	1	1		
9	4ES–11351–00	GASKET, CYLINDER	1	1	1	1		
10	90116–08318	BOLT, STUD	2	2	2	2		
11	90116–08388	BOLT, STUD	2	2	2	2		
12	99590–10114	PIN, DOWEL	2	2	2	2		
13	90179–08299	NUT	4	4	4	4		

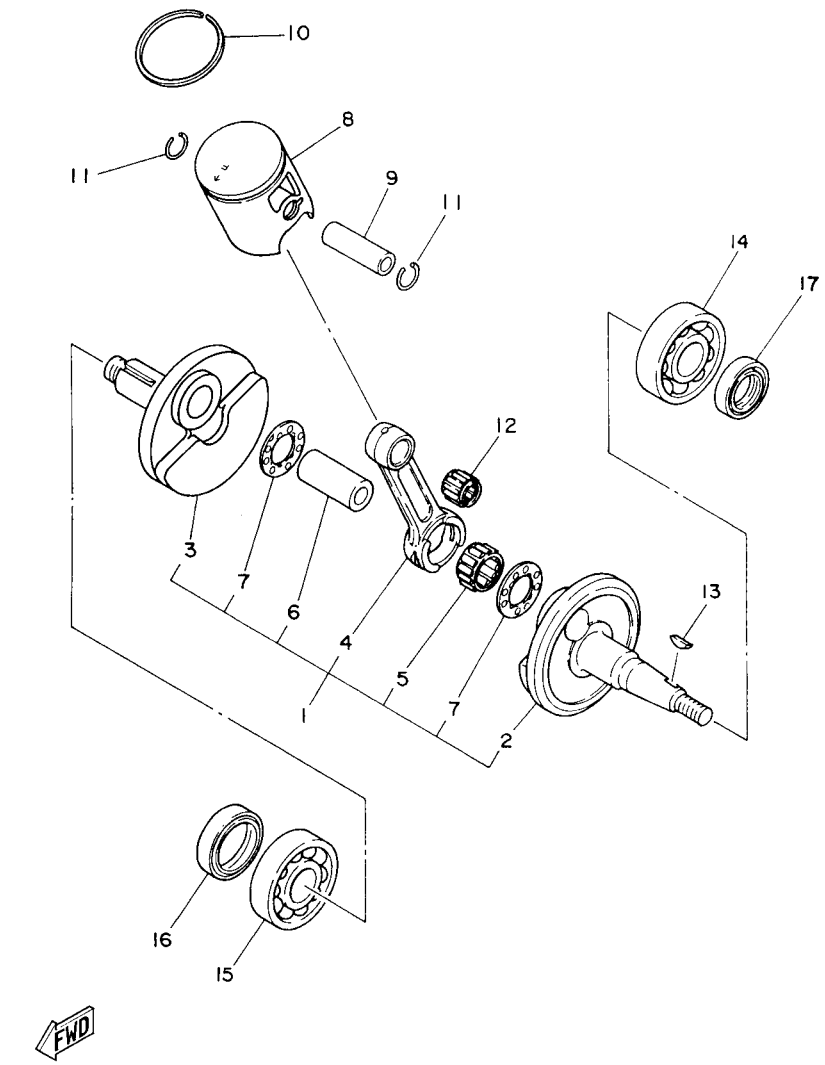

FIG. 2 CRANKSHAFT & PISTON

REF. NO.	PART NO.	DESCRIPTION	5PA7	5PA9	5SH7	5SH9		REMARKS
1	5PA–11400–00	CRANKSHAFT ASSY	1	1	1	1		
2	5PA–11412–00	.CRANK 1	1	1	1	1		
3	5PA–11422–00	.CRANK 2	1	1	1	1		
4	4ES–11651–10	.ROD, CONNECTING	1	1	1	1		
5	93310–420B1	.BEARING	1	1	1	1		
6	2RA–11681–00	.PIN, CRANK 1	1	1	1	1		
7	90209–20159	.WASHER	2	2	2	2		
8	5PA–11631–00–A0	PISTON (STD)	1	1	1	1		UR RED
	5PA–11631–00–B0	PISTON (STD)	1	1	1	1		UR ORANGE
	5PA–11631–00–C0	PISTON (STD)	1	1	1	1		UR GREEN
	5PA–11631–00–D0	PISTON (STD)	1	1	1	1		UR PURPLE
9	4ES–11633–00	PIN, PISTON	1	1	1	1		
10	5PA–11611–00	RING, PISTON	1	1	1	1		
11	93450–16115	CIRCLIP	2	2	2	2		
12	93310–21417	BEARING	1	1	1	1		
13	90280–03017	KEY, WOODRUFF	1	1	1	1		
14	93306–20438	BEARING	1	1	1	1		
15	93306–30421	BEARING (B6304C3)	1	1	1	1		
16	93102–28009	OIL SEAL	1	1	1	1		
17	93102–20447	OIL SEAL	1	1	1	1		

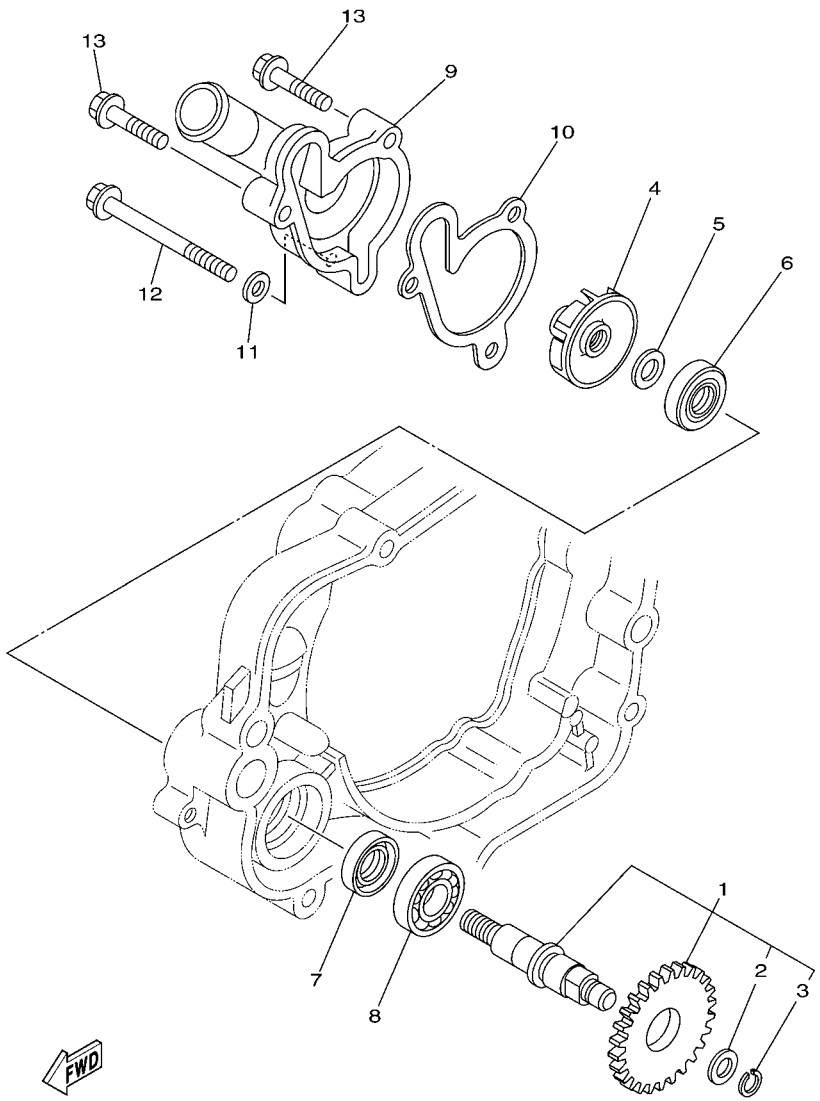

5PA1100-A030

FIG. 3 WATER PUMP

REF. NO.	PART NO.	DESCRIPTION	5PA7	5PA9	5SH7	5SH9		REMARKS
1	5PA–12459–00	GEAR, IMPELLER SHAFT	1	1	1	1		
2	90201–08512	.WASHER, PLATE	1	1	1	1		
3	93440–07182	.CIRCLIP	1	1	1	1		
4	5PA–12451–00	IMPELLER, WATER PUMP	1	1	1	1		
5	90201–08512	WASHER, PLATE	1	1	1	1		
6	93109–11073	OIL SEAL	1	1	1	1		
7	93102–12106	OIL SEAL (SD 12-22-5 HS)	1	1	1	1		
8	93306–00105	BEARING (B6001)	1	1	1	1		
9	4BA–12422–00	COVER, HOUSING	1	1	1	1		
10	4BA–12428–00	GASKET, HOUSING COVER 2	1	1	1	1		
11	90430–06166	GASKET	1	1	1	1		
12	95827–06060	BOLT, FLANGE	1	1	1	1		
13	95027–06025	BOLT, FLANGE	2	2	2	2		

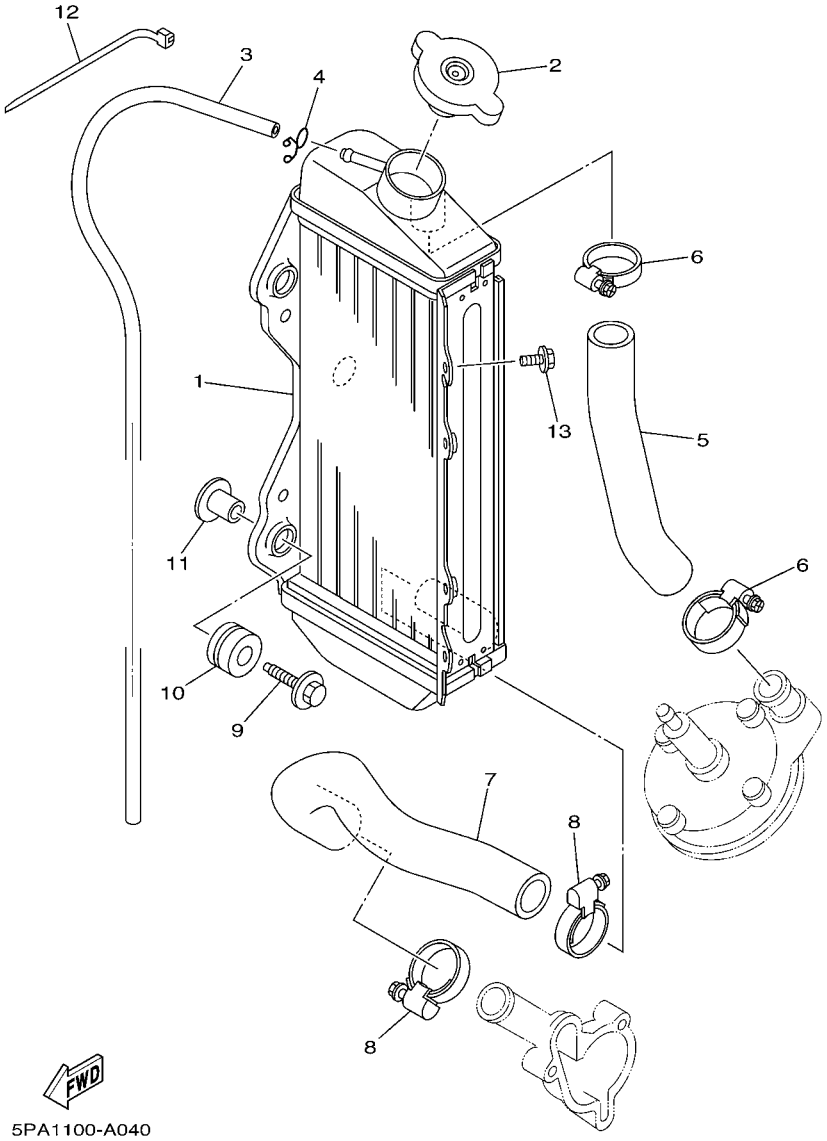

FIG. 4 RADIATOR & HOSE

REF. NO.	PART NO.	DESCRIPTION	5PA7	5PA9	5SH7	5SH9		REMARKS
1	5PA–12461–00	RADIATOR ASSY	1	1	1	1		
2	5HD–12462–00	CAP, RADIATOR	1	1	1	1		
3	22W–12463–00	PIPE, BREATHER	1	1	1	1		
4	90467–08002	CLIP	1	1	1	1		
5	4ES–12481–10	PIPE 1	1	1	1	1		
6	90450–25037	HOSE CLAMP ASSY	2	2	2	2		
7	5PA–12482–00	PIPE 2	1	1	1	1		
8	90450–28014	HOSE CLAMP ASSY	2	2	2	2		
9	90119–06038	BOLT, WITH WASHER	3	3	3	3		
10	90480–15528	GROMMET	3	3	3	3		
11	90387–0614M	COLLAR	3	3	3	3		
12	90464–13077	CLAMP	2	2	2	2		
13	95827–06010	BOLT, FLANGE	1	1	1	1		

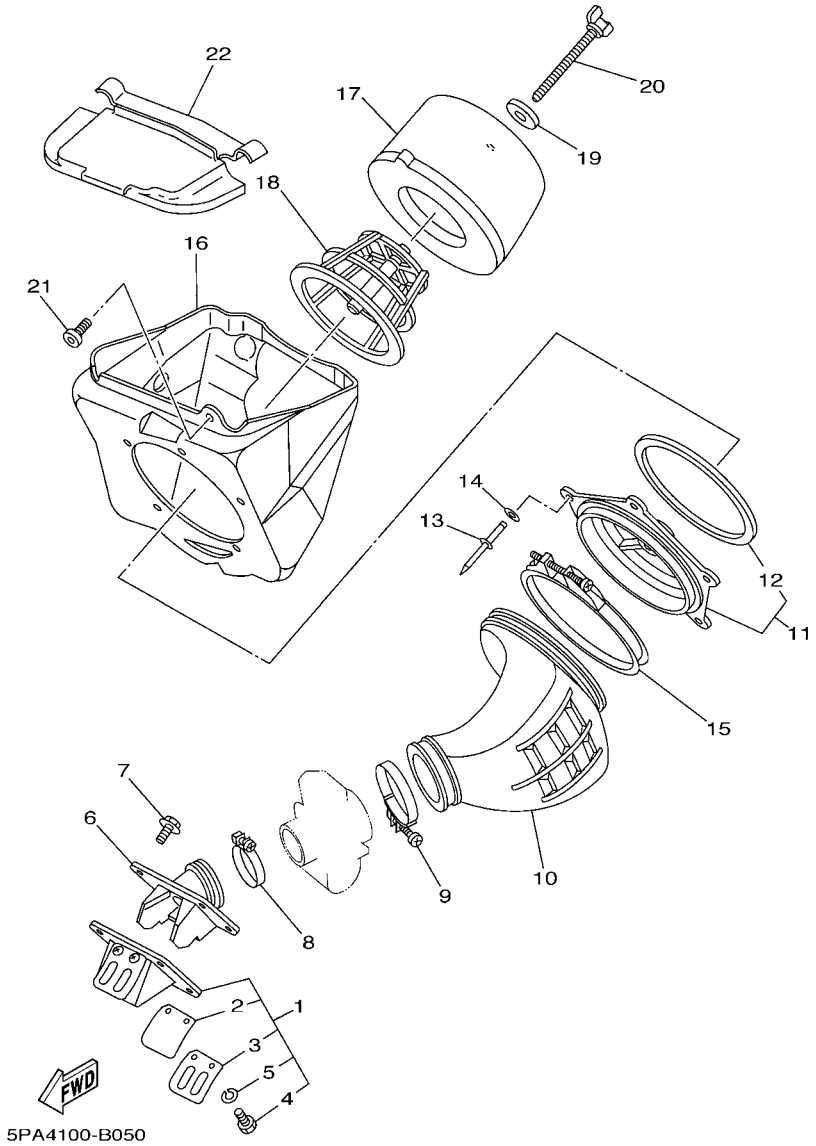

FIG. 5 INTAKE

REF. NO.	PART NO.	DESCRIPTION	5PA7	5PA9	5SH7	5SH9		REMARKS
1	4ES–13610–00	REED VALVE ASSY	1	1	1	1		
2	4ES–13613–00	.REED, VALVE	2	2	2	2		
3	4ES–13616–00	.STOPPER, REED VALVE	2	2	2	2		
4	98507–03008	.SCREW, PAN HEAD	4	4	4	4		
5	92907–03100	.WASHER, SPRING	4	4	4	4		
6	5PA–13565–00	JOINT, CARBURETOR	1	1	1	1		
7	95027–06020	BOLT, FLANGE	4	4	4	4		
8	90460–41191	CLAMP, HOSE	1	1	1	1		
9	90460–56105	CLAMP, HOSE	1	1	1	1		
10	5PA–14453–00	JOINT, AIR CLEANER 1	1	1	1	1		
11	5PA–14459–00	HOLDER, GUIDE	1	1	1	1		
12	4ES–14462–00	.SEAL	1	1	1	1		
13	90267–48138	RIVET, BLIND	5	5	5	5		
14	90201–043H7	WASHER, PLATE	5	5	5	5		
15	90450–99064	HOSE CLAMP ASSY	1	1	1	1		
16	5PA–14411–00	CASE, AIR CLEANER 1	1	1	1	1		
17	5PA–14451–00	ELEMENT, AIR CLEANER	1	1	1	1		
18	5PA–14458–00	GUIDE	1	1	1	1		
19	90209–06096	WASHER	1	1	1	1		
20	90122–06002	BOLT, WING	1	1	1	1		
21	90109–065F3	BOLT	1	1	1	1		
22	5PA–14417–00	COVER 1	1	1	1	1		AP

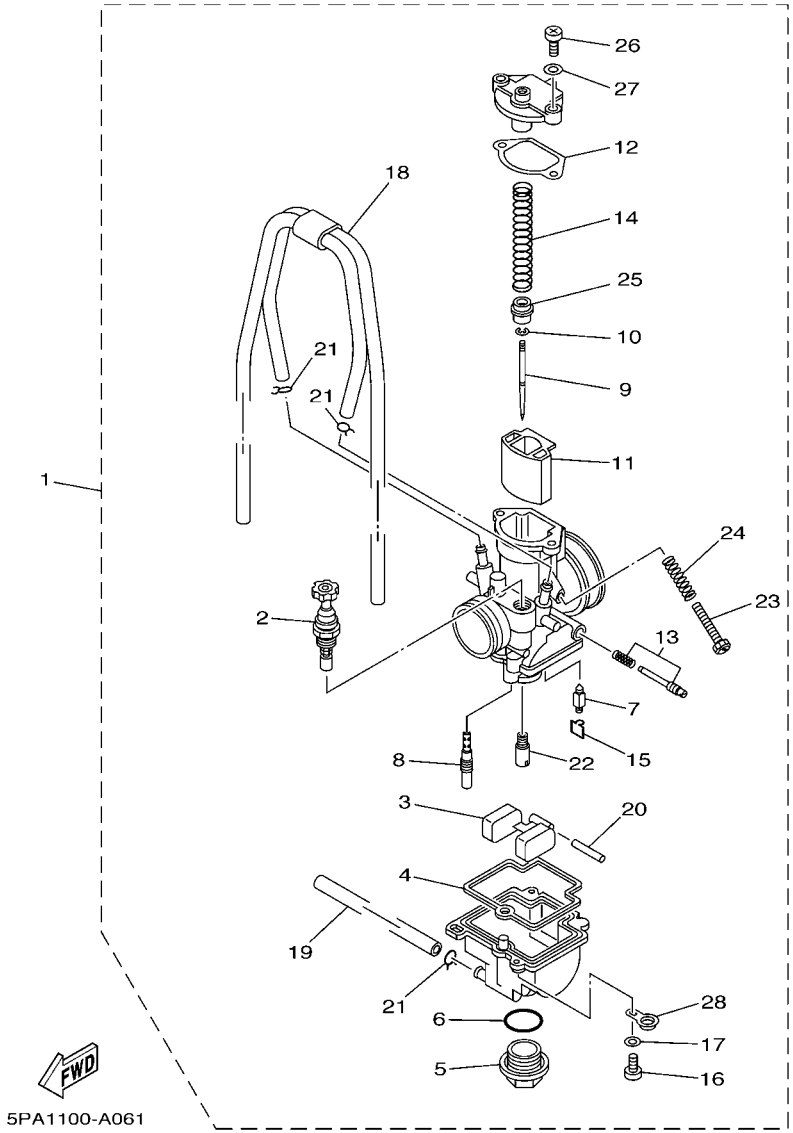

FIG. 6 CARBURETOR

REF. NO.	PART NO.	DESCRIPTION	5PA7	5PA9	5SH7	5SH9		REMARKS
1	5PA–14101–00	CARBURETOR ASSY 1	1	1	1	1		
2	4JT–14171–00	.PLUNGER, STARTER	1	1	1	1		
3	5PA–14985–00	.FLOAT	1	1	1	1		
4	5PA–14984–00	.GASKET, FLOAT CHAMBER	1	1	1	1		
5	4MX–14115–00	.PLUG, SCREW	1	1	1	1		
6	4MX–14561–00	.O-RING	1	1	1	1		
7	5PA–14392–00	.VALVE, NEEDLE	1	1	1	1		
8	4MX–14948–05	.JET, SLOW (#45)	1	1	1	1		STD
	4MX–14948–04	.JET, SLOW (#42)	1	1	1	1		AP
	4MX–14948–06	.JET, SLOW (#48)	1	1	1	1		AP
9	5PA–14916–KF	.NEEDLE (NBKF)	1	1	1	1		STD
	5PA–14916–LE	.NEEDLE (NBLE)	1	1	1	1		AP
	5PA–14916–LF	.NEEDLE (NBLF)	1	1	1	1		AP
	5PA–14916–LG	.NEEDLE (NBLG)	1	1	1	1		AP
	5PA–14916–KE	.NEEDLE (NBKE)	1	1	1	1		AP
	5PA–14916–KG	.NEEDLE (NBKG)	1	1	1	1		AP
10	4MX–14919–00	.CLIP	1	1	1	1		
11	5PA–14340–00	.VALVE ASSY	1	1	1	1		
12	5PA–14126–00	.GASKET	1	1	1	1		
13	5PA–14105–00	.PILOT SCREW SET	1	1	1	1		
14	5PA–14131–00	.SPRING, THROTTLE VALVE	1	1	1	1		
15	5PA–14159–00	.CLIP	1	1	1	1		
16	98504–04014	.SCREW, PAN HEAD	2	2	2	2		
17	92903–04600	.WASHER	2	2	2	2		
18	5PA–1410E–00	.HOSE	1	1	1	1		
19	4XL–14197–10	.PIPE	1	1	1	1		
20	676–14548–00	.PIN, FLOAT ARM	1	1	1	1		

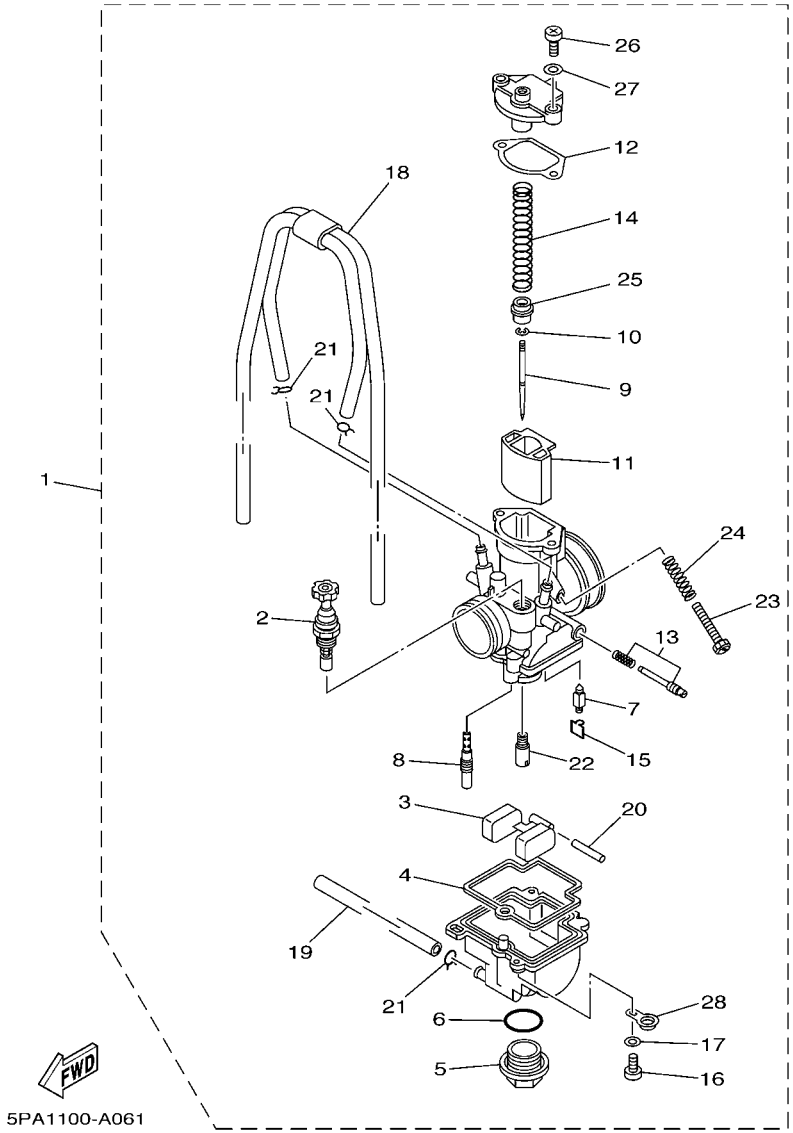

FIG. 6 CARBURETOR

REF. NO.	PART NO.	DESCRIPTION	5PA7	5PA9	5SH7	5SH9		REMARKS
21	3TJ–14137–40	.CLIP	3	3	3	3		
22	4MX–14943–85	.JET, MAIN (#138)	1	1	1	1		STD
	4MX–14943–84	.JET, MAIN (#132)	1	1	1	1		AP
	4MX–14943–34	.JET, MAIN (#135)	1	1	1	1		AP
	4MX–14943–35	.JET, MAIN (#140)	1	1	1	1		AP
	4MX–14943–86	.JET, MAIN (#142)	1	1	1	1		AP
	4MX–14943–36	.JET, MAIN (#145)	1	1	1	1		AP
	4MX–14943–87	.JET, MAIN (#148)	1	1	1	1		AP
23	5HC–14922–00	.SCREW, THROTTLE	1	1	1	1		
24	5HC–14934–00	.SPRING, THROTTLE STOP	1	1	1	1		
25	5PA–14194–00	.RING	1	1	1	1		
26	98504–04012	.SCREW, PAN HEAD	2	2	2	2		
27	92903–04600	.WASHER	2	2	2	2		
28	5PA–14146–00	.PLATE	1	1	1	1		

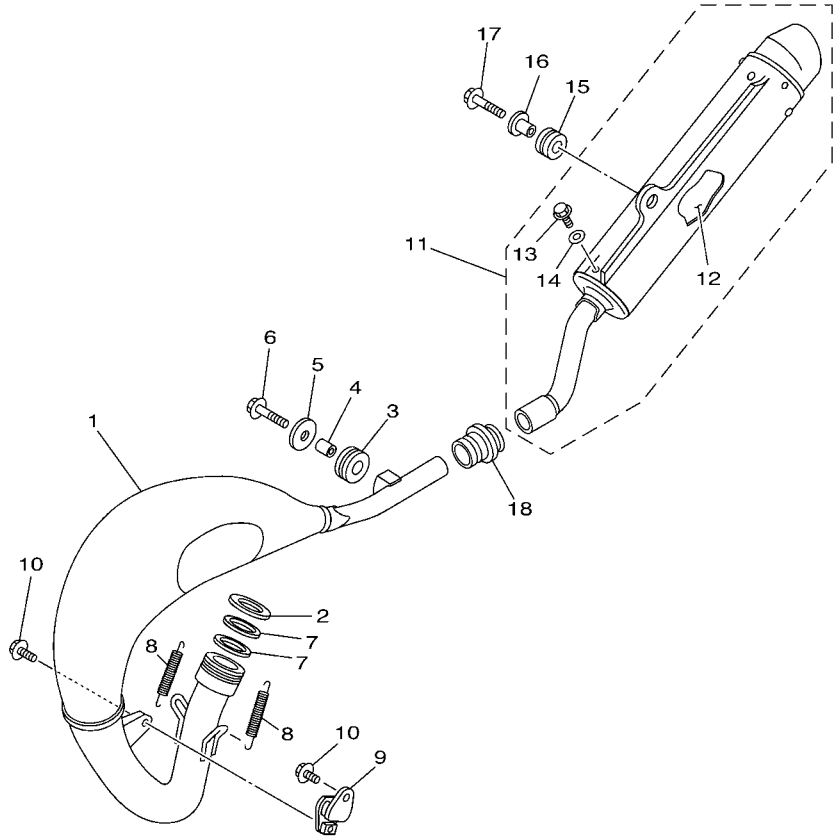

5PA4100-B070

FIG. 7 EXHAUST

REF. NO.	PART NO.	DESCRIPTION	5PA7	5PA9	5SH7	5SH9		REMARKS
1	5PA–14610–00	EXHAUST PIPE ASSY 1	1	1	1	1		
2	90201–33299	WASHER, PLATE	1	1	1	1		
3	90480–18411	GROMMET	1	1	1	1		
4	90387–105L0	COLLAR	1	1	1	1		
5	90201–060A3	WASHER, PLATE	1	1	1	1		
6	95027–06025	BOLT, FLANGE	1	1	1	1		
7	5PA–14642–00	SEAL, EXHAUST	2	2	2	2		
8	90507–20052	SPRING, TENSION	2	2	2	2		
9	565–14771–00	STAY, MUFFLER 1	1	1	1	1		
10	90119–06001	BOLT, WITH WASHER	2	2	2	2		
11	4ES–14753–20	SILENCER, EXHAUST	1	1		1		UR EXCEPT FOR EUR
	5PA–14753–00	SILENCER, EXHAUST	1		1			UR FOR EUR
12	4ES–1469A–00	.FIBER	1	1		1		UR EXCEPT FOR EUR
	5PA–1469A–00	.FIBER	1		1			UR FOR EUR
13	92017–06010	.BOLT, BUTTON HEAD	2	2	2	2		
14	90201–06050	.WASHER, PLATE	2	2	2	2		
15	90480–16561	GROMMET	1	1	1	1		
16	90387–063G3	COLLAR	1	1	1	1		
17	95027–06025	BOLT, FLANGE	1	1	1	1		
18	17W–14615–00	JOINT, EXHAUST 1	1	1	1	1		

FIG. 8 CRANKCASE

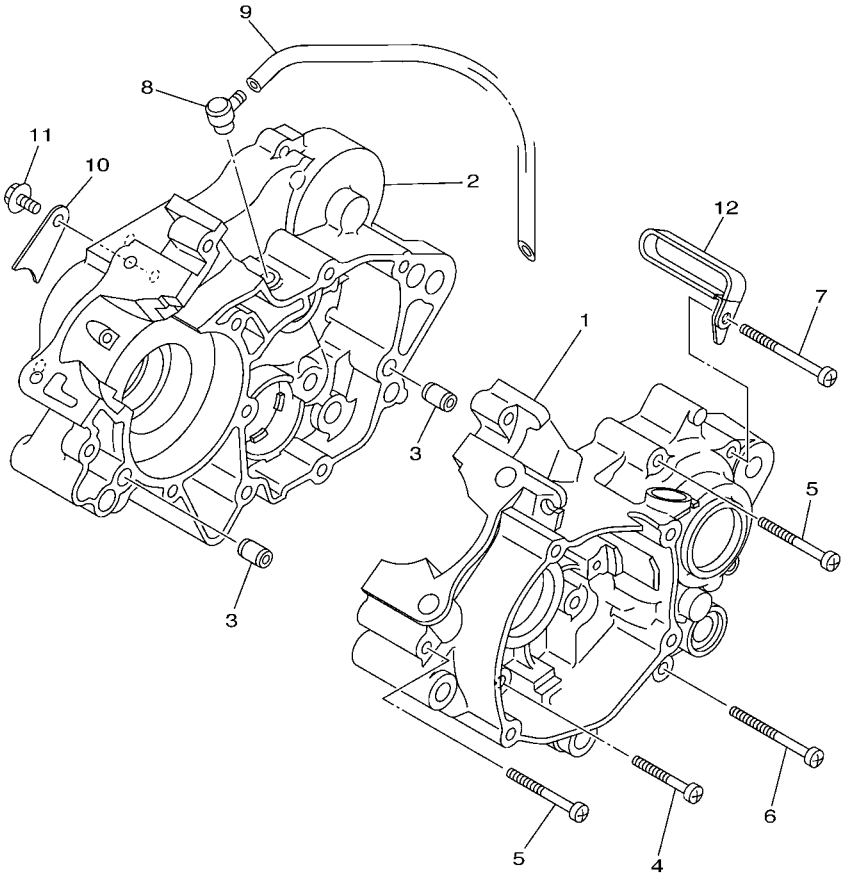

5PA4100-B080

REF. NO.	PART NO.	DESCRIPTION	5PA7	5PA9	5SH7	5SH9		REMARKS
1	5PA–15111–00	CRANKCASE 1	1	1	1	1		
2	5PA–15121–10	CRANKCASE 2	1	1	1	1		
3	99530–10014	PIN, DOWEL	2	2	2	2		
4	98507–06040	SCREW, PAN HEAD	3	3	3	3		
5	98507–06050	SCREW, PAN HEAD	4	4	4	4		
6	98507–06060	SCREW, PAN HEAD	3	3	3	3		
7	98507–06070	SCREW, PAN HEAD	1	1	1	1		
8	353–13115–01	CONNECTOR, SUCTION PIPE	1	1	1	1		
9	90445–08376	HOSE (L330)	1	1	1	1		
10	5PA–15118–00	HOLDER	1	1	1	1		
11	90105–08050	BOLT, FLANGE	1	1	1	1		
12	90461–10136	CLAMP	1	1	1	1		

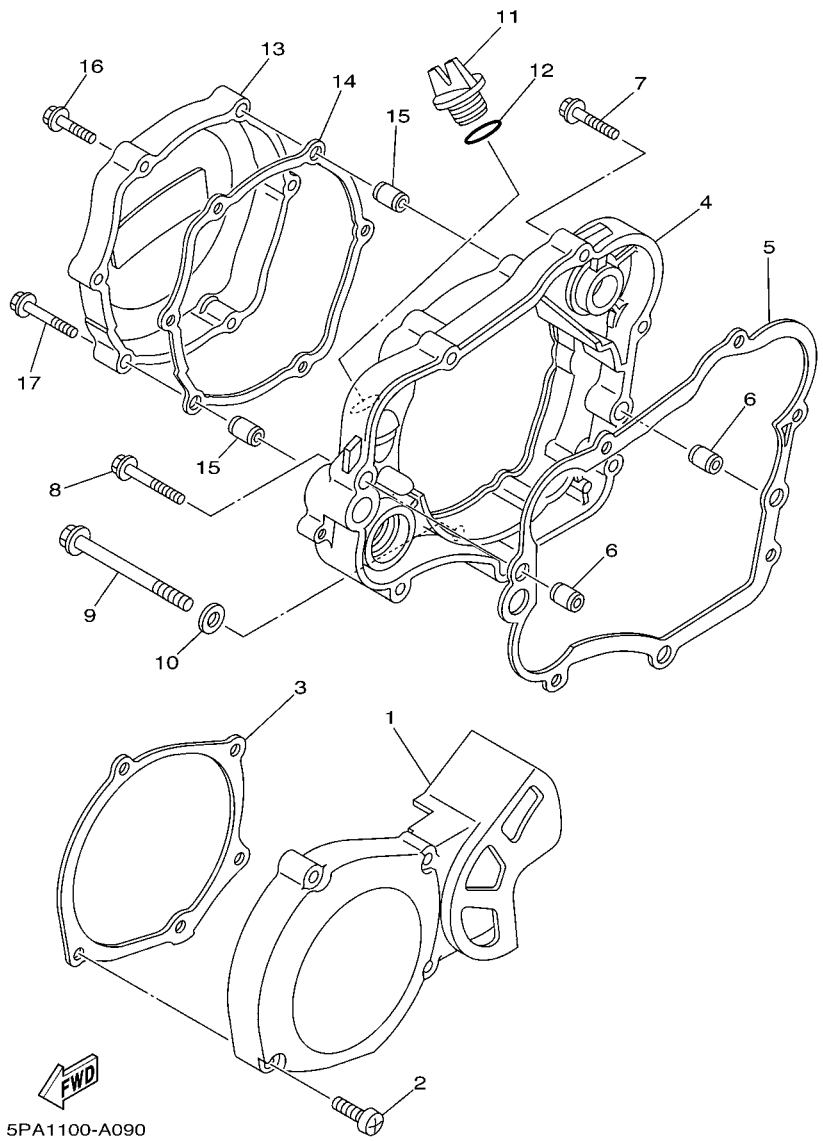

FIG. 9 CRANKCASE COVER 1

REF. NO.	PART NO.	DESCRIPTION	5PA7	5PA9	5SH7	5SH9		REMARKS
1	4ES–15411–00	COVER, CRANKCASE 1	1	1	1	1		
2	98507–06030	SCREW, PAN HEAD	4	4	4	4		
3	5PA–15451–00	GASKET, CRANKCASE COVER 1	1	1	1	1		
4	5PA–15431–00	COVER, CRANKCASE 3	1	1	1	1		
5	4ES–15461–00	GASKET, CRANKCASE COVER 2	1	1	1	1		
6	99530–10014	PIN, DOWEL	2	2	2	2		
7	95027–06030	BOLT, FLANGE	4	4	4	4		
8	95027–06040	BOLT, FLANGE	1	1	1	1		
9	95027–08080	BOLT, FLANGE	1	1	1	1		
10	90430–08119	GASKET	1	1	1	1		
11	3Y1–15363–00	PLUG, OIL	1	1	1	1		
12	93210–19123	O-RING	1	1	1	1		
13	5PA–15415–00	COVER, GENERATOR	1	1	1	1		
14	5PA–15463–00	GASKET, CARBURETOR COVER 2	1	1	1	1		
15	99530–08016	PIN, DOWEL	2	2	2	2		
16	95027–06025	BOLT, FLANGE	4	4	4	4		
17	95027–06035	BOLT, FLANGE	2	2	2	2		

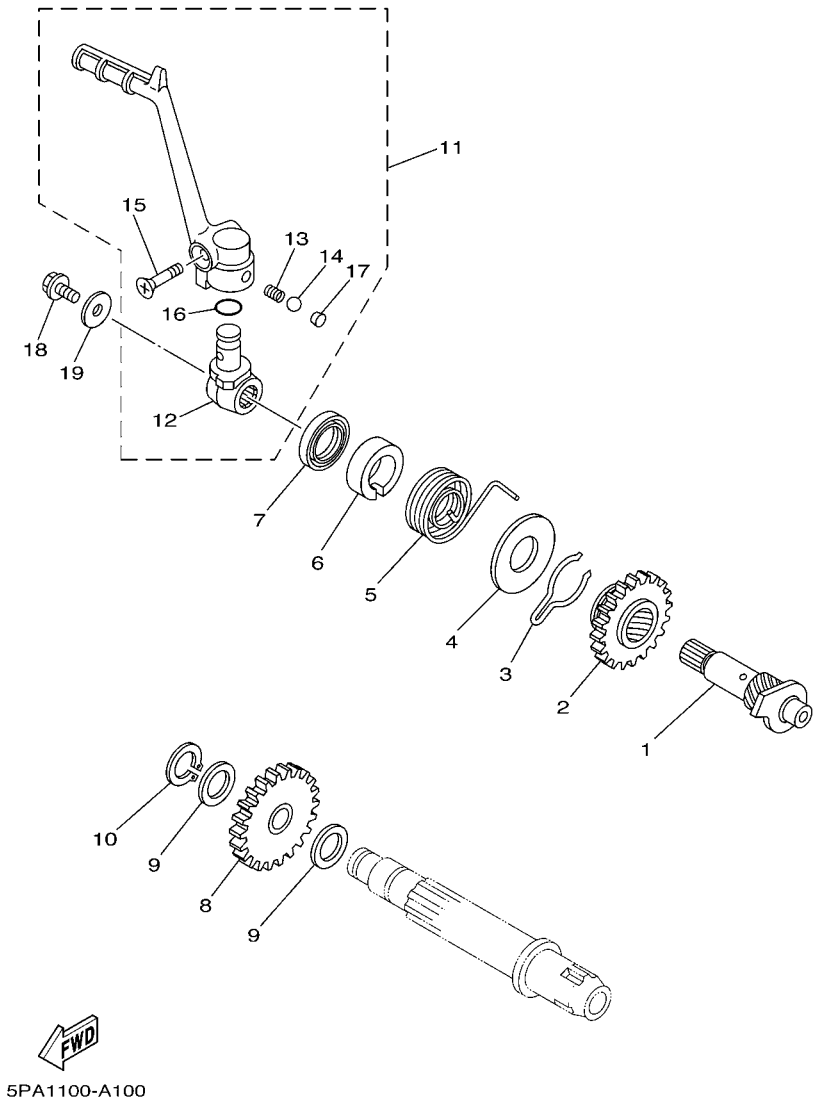

FIG. 10 STARTER

REF. NO.	PART NO.	DESCRIPTION	5PA7	5PA9	5SH7	5SH9		REMARKS
1	5PA–15660–00	KICK AXLE ASSY	1	1	1	1		
2	5PA–15641–00	GEAR, KICK	1	1	1	1		
3	90468–23194	CLIP	1	1	1	1		
4	90201–176L4	WASHER, PLATE	1	1	1	1		
5	90508–26750	SPRING, TORSION	1	1	1	1		
6	4ES–15664–00	GUIDE, SPRING	1	1	1	1		
7	93102–17263	OIL SEAL	1	1	1	1		
8	5PA–15651–00	GEAR, KICK IDLE	1	1	1	1		
9	90201–124F8	WASHER, PLATE	2	2	2	2		
10	99009–12400	CIRCLIP	1	1	1	1		
11	5PA–15620–00	KICK CRANK ASSY	1	1	1	1		
12	5PA–15621–00	.BOSS, KICK CRANK	1	1	1	1		
13	90501–12081	.SPRING, COMPRESSION	1	1	1	1		
14	93507–32009	.BALL	1	1	1	1		
15	90152–06010	.SCREW, COUNTERSUNK	1	1	1	1		
16	93210–12152	.O-RING	1	1	1	1		
17	90336–06031	.PLUG, TAPER	1	1	1	1		
18	95027–06012	BOLT, FLANGE	1	1	1	1		
19	90201–06060	WASHER, PLATE	1	1	1	1		

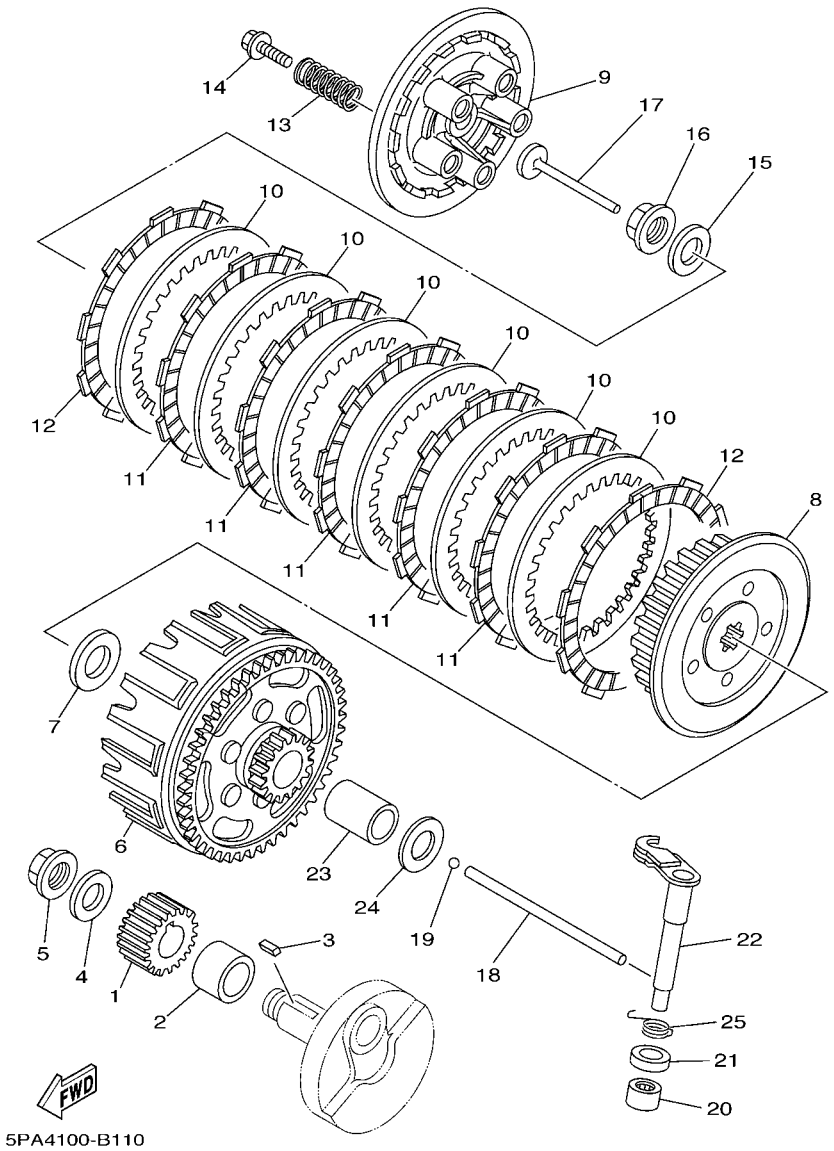

FIG. 11 CLUTCH

REF. NO.	PART NO.	DESCRIPTION	5PA7	5PA9	5SH7	5SH9		REMARKS
1	5PA–16111–00	GEAR, PRIMARY DRIVE	1	1	1	1		
2	90387–20488	COLLAR	1	1	1	1		
3	90282–05001	KEY, STRAIGHT (5MMX16MM)	1	1	1	1		
4	90208–12015	WASHER, CONICAL SPRING	1	1	1	1		
5	90179–12659	NUT	1	1	1	1		
6	5PA–16150–10	PRIMARY DRIVEN GEAR COMP.	1	1	1	1		
7	90201–17558	WASHER, PLATE	1	1	1	1		
8	5PA–16371–10	BOSS, CLUTCH	1	1	1	1		
9	2TK–16351–00	PLATE, PRESSURE 1	1	1	1	1		
10	131–16324–00	PLATE, CLUTCH 1	6	6	6	6		
11	4ES–16321–00	PLATE, FRICTION	5	5	5	5		
12	21V–16321–00	PLATE, FRICTION	2	2	2	2		
13	90501–20735	SPRING, COMPRESSION	5	5	5	5		
14	90119–05001	BOLT, WITH WASHER	5	5	5	5		
15	90208–12015	WASHER, CONICAL SPRING	1	1	1	1		
16	90179–12659	NUT	1	1	1	1		
17	4ES–16356–00	ROD, PUSH 1	1	1	1	1		
18	5PA–16357–00	ROD, PUSH 2	1	1	1	1		
19	93503–16003	BALL	1	1	1	1		
20	93315–11206	BEARING	1	1	1	1		
21	93102–12224	OIL SEAL	1	1	1	1		
22	4ES–16381–00	PUSH LEVER COMP.	1	1	1	1		
23	5PA–16181–00	SPACER 1	1	1	1	1		
24	90201–171G6	WASHER, PLATE	1	1	1	1		
25	90508–14016	SPRING, TORSION	1	1	1	1		

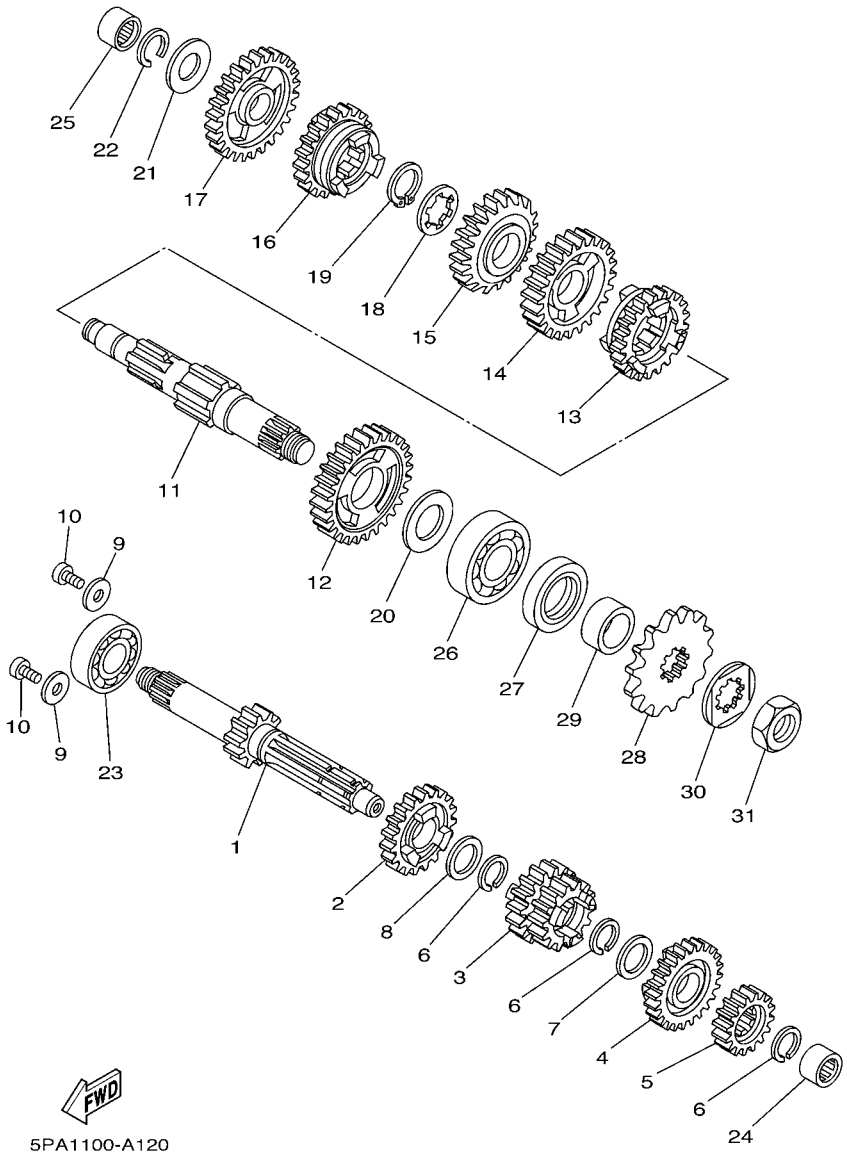

FIG. 12 TRANSMISSION

REF. NO.	PART NO.	DESCRIPTION	5PA7	5PA9	5SH7	5SH9		REMARKS
1	5PA–17411–00	AXLE, MAIN (11T)	1	1	1	1		
2	4ES–17151–10	GEAR, 5TH PINION (23T)	1	1	1	1		
3	4ES–17131–02	GEAR, 3RD PINION (17T/17T)	1	1	1	1		
4	4ES–17161–10	GEAR, 6TH PINION (25T)	1	1	1	1		
5	4ES–17121–01	GEAR, 2ND PINION (17T)	1	1	1	1		
6	93440–17064	CIRCLIP	3	3	3	3		
7	90209–14008	WASHER	1	1	1	1		
8	90201–17545	WASHER, PLATE	1	1	1	1		
9	90201–06060	WASHER, PLATE	2	2	2	2		
10	90157–06071	SCREW, PAN HEAD	2	2	2	2		
11	5PA–17421–00	AXLE, DRIVE	1	1	1	1		
12	5PA–17221–00	GEAR, 2ND WHEEL (32T)	1	1	1	1		
13	5PA–17261–00	GEAR, 6TH WHEEL (25T)	1	1	1	1		
14	4ES–17231–10	GEAR, 3RD WHEEL (26T)	1	1	1	1		
15	5PA–17241–00	GEAR, 4TH WHEEL (22T)	1	1	1	1		
16	4ES–17251–00	GEAR, 5TH WHEEL (26T)	1	1	1	1		
17	4ES–17211–01	GEAR, 1ST WHEEL (27T)	1	1	1	1		
18	90209–16209	WASHER	1	1	1	1		
19	93410–20038	CIRCLIP	1	1	1	1		
20	90201–20611	WASHER, PLATE	1	1	1	1		
21	164–17427–00–06	SHIM 1 (T=0.6)	1	1	1	1		UR
	164–17427–00–08	SHIM 1 (T=0.8)	1	1	1	1		UR
	164–17427–00–10	SHIM 1 (T=1.0)	1	1	1	1		UR
22	93440–15012	CIRCLIP	1	1	1	1		
23	93306–20333	BEARING	1	1	1	1		
24	93317–11245	BEARING	1	1	1	1		
25	93315–31502	BEARING	1	1	1	1		

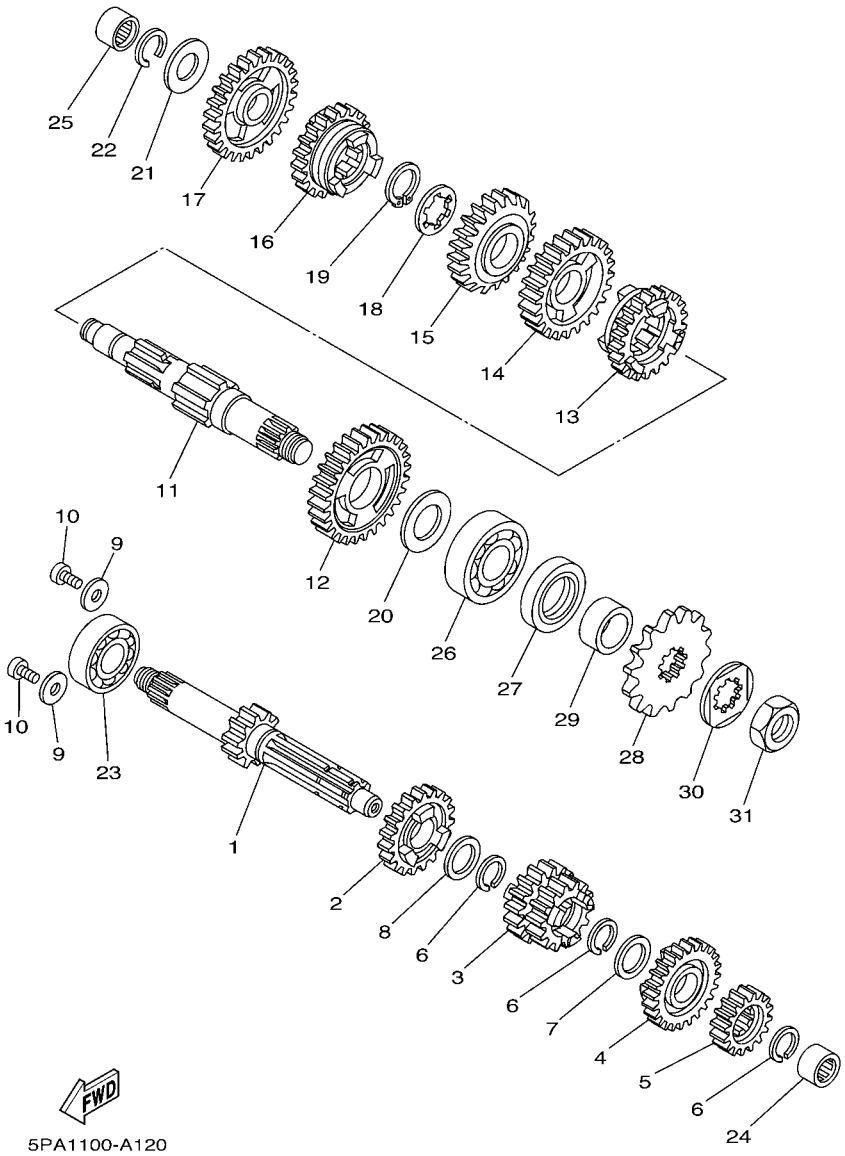

FIG. 12 TRANSMISSION

REF. NO.	PART NO.	DESCRIPTION	5PA7	5PA9	5SH7	5SH9		REMARKS
26	93306–20401	BEARING (B6204)	1	1	1	1		
27	93102–26042	OIL SEAL	1	1	1	1		
28	9382A–14227	SPROCKET, DRIVE (14T)	1	1	1	1		STD
	9382A–15228	SPROCKET, DRIVE (15T)	1	1	1	1		AP
29	90387–202A0	COLLAR	1	1	1	1		
30	90215–20261	WASHER, LOCK	1	1	1	1		
31	90179–16226	NUT	1	1	1	1		

FIG. 13 SHIFT CAM & FORK

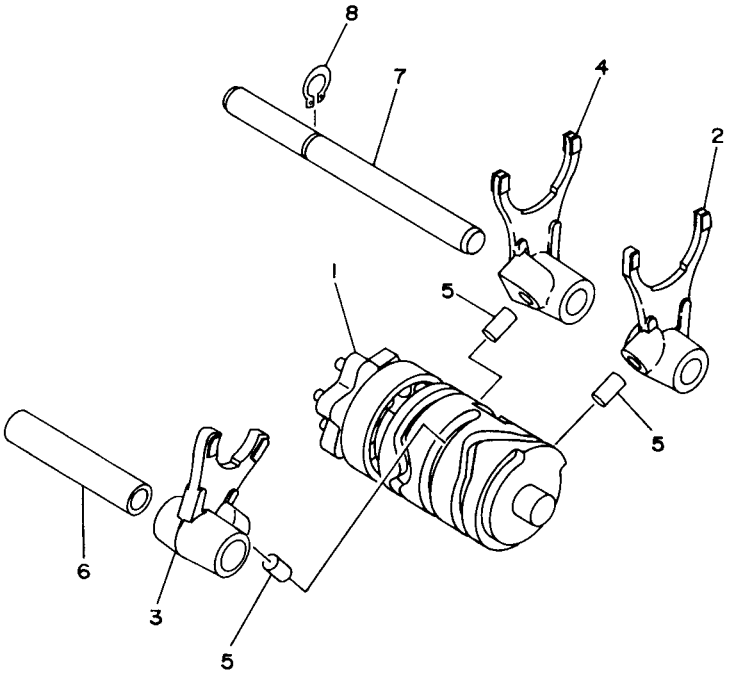

4ES3100-4130

REF. NO.	PART NO.	DESCRIPTION	5PA7	5PA9	5SH7	5SH9		REMARKS
1	4ES–18540–00	SHIFT CAM ASSY	1	1	1	1		
2	4ES–18511–02	FORK, SHIFT 1	1	1	1	1		
3	5R2–18512–00	FORK, SHIFT 2	1	1	1	1		
4	4ES–18513–01	FORK, SHIFT 3	1	1	1	1		
5	90250–06013	PIN, STRAIGHT	3	3	3	3		
6	4BA–18531–00	BAR, SHIFT FORK GUIDE 1	1	1	1	1		
7	4BA–18535–00	BAR, SHIFT FORK GUIDE 2	1	1	1	1		
8	99009–10400	CIRCLIP	1	1	1	1		

FIG. 14 SHIFT SHAFT

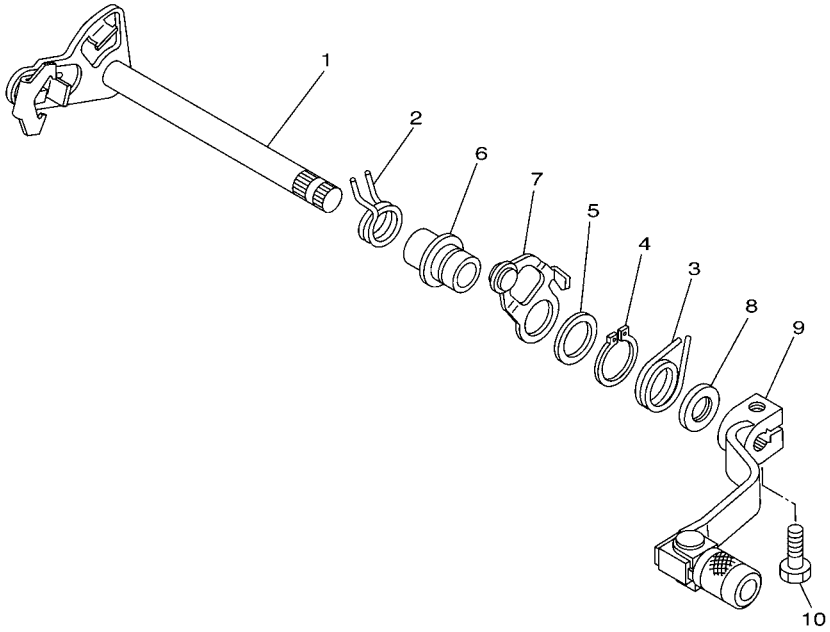

5PA1100-A140

REF. NO.	PART NO.	DESCRIPTION	5PA7	5PA9	5SH7	5SH9		REMARKS
1	5PA–18101–00	SHIFT SHAFT ASSY	1	1	1	1		
2	90508–32016	SPRING, TORSION	1	1	1	1		
3	90508–24007	SPRING, TORSION	1	1	1	1		
4	99009–17400	CIRCLIP	1	1	1	1		
5	90201–177G4	WASHER, PLATE	1	1	1	1		
6	5PA–1811E–00	COLLAR,SHIFT PEDAL	1	1	1	1		
7	5PA–18140–00	STOPPER LEVER ASSY	1	1	1	1		
8	93101–12173	OIL SEAL	1	1	1	1		
9	2HF–18110–01	SHIFT PEDAL ASSY	1	1	1	1		
10	97027–06020	BOLT	1	1	1	1		

FIG. 15 FRAME

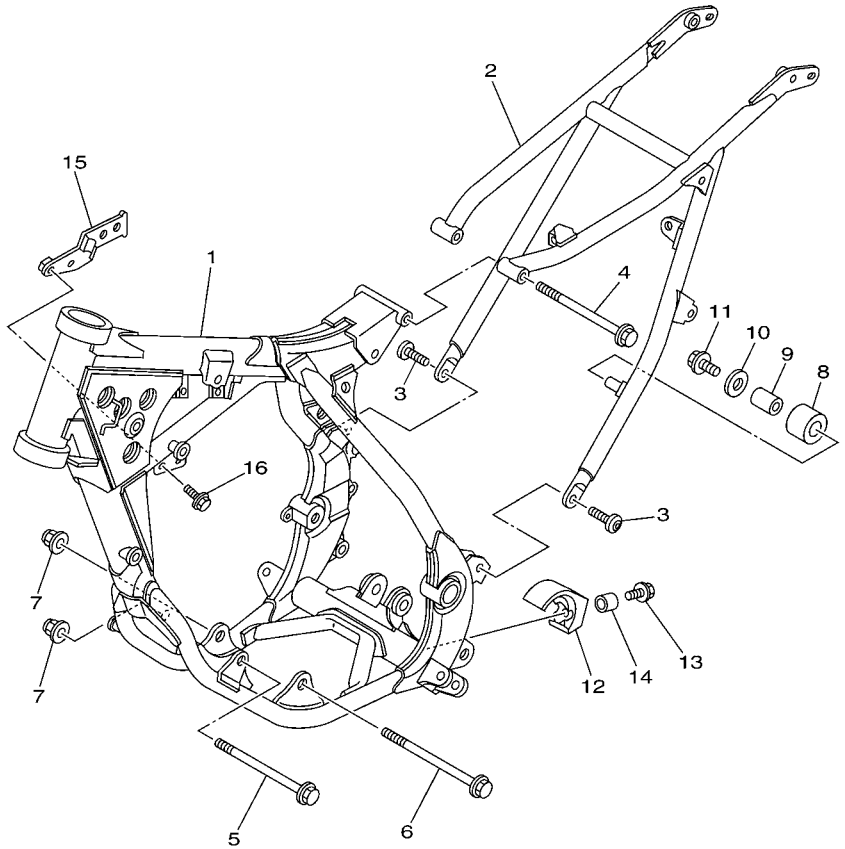

5PA1100-A150

REF. NO.	PART NO.	DESCRIPTION	5PA7	5PA9	5SH7	5SH9		REMARKS
1	5PA–21101–11–P0	FRONT FRAME COMP.	1	1	1	1		DPBMC
2	5PA–21190–00–P0	REAR FRAME COMP.	1	1	1	1		DPBMC
3	90110–08096	BOLT, HEXAGON SOCKET HEAD	2	2	2	2		
4	95817–08125	BOLT, FLANGE	1	1	1	1		
5	90105–10052	BOLT, FLANGE	1	1	1	1		
6	90105–10731	BOLT, FLANGE	1	1	1	1		
7	95607–10200	NUT, SELF-LOCKING	2	2	2	2		
8	30X–22178–00	TENSIONER	1	1	1	1		
9	4V4–22184–00	BUSH	1	1	1	1		
10	90201–081R9	WASHER, PLATE	1	1	1	1		
11	95027–08012	BOLT, FLANGE	1	1	1	1		
12	4ES–22178–00	TENSIONER	1	1	1	1		
13	90119–06118	BOLT, WITH WASHER	1	1	1	1		
14	90387–060A3	COLLAR	1	1	1	1		
15	5PA–21274–00	BRACKET, C.D.I. UNIT	1	1	1	1		
16	95027–06012	BOLT, FLANGE	2	2	2	2		

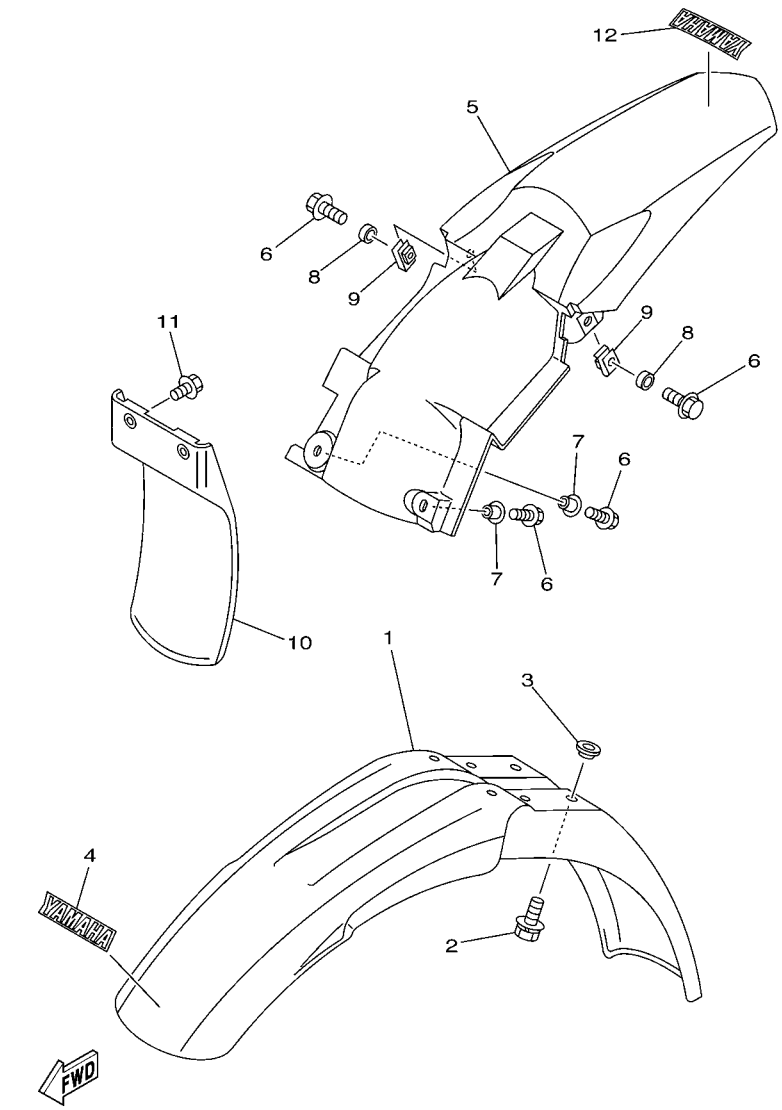

5PA1100-A160

FIG. 16 FENDER

REF. NO.	PART NO.	DESCRIPTION	5PA7	5PA9	5SH7	5SH9		REMARKS
1	4ES–21511–20	FENDER, FRONT	1	1	1	1		
2	90119–06063	BOLT, WITH WASHER	4	4	4	4		
3	90209–06187	WASHER	4	4	4	4		
4	4ES–2153E–01	EMBLEM, YAMAHA	1	1	1	1		
5	5PA–21611–00	FENDER, REAR	1	1	1	1		
6	90119–06192	BOLT, WITH WASHER	4	4	4	4		
7	90387–064X4	COLLAR	2	2	2	2		
8	90387–0701A	COLLAR	2	2	2	2		
9	90183–06023	NUT, SPRING	2	2	2	2		
10	4ES–21642–00	GUARD, FLAP	1	1	1	1		
11	90119–06185	BOLT, WITH WASHER	2	2	2	2		
12	4ES–2153E–01	EMBLEM, YAMAHA	1	1	1	1		

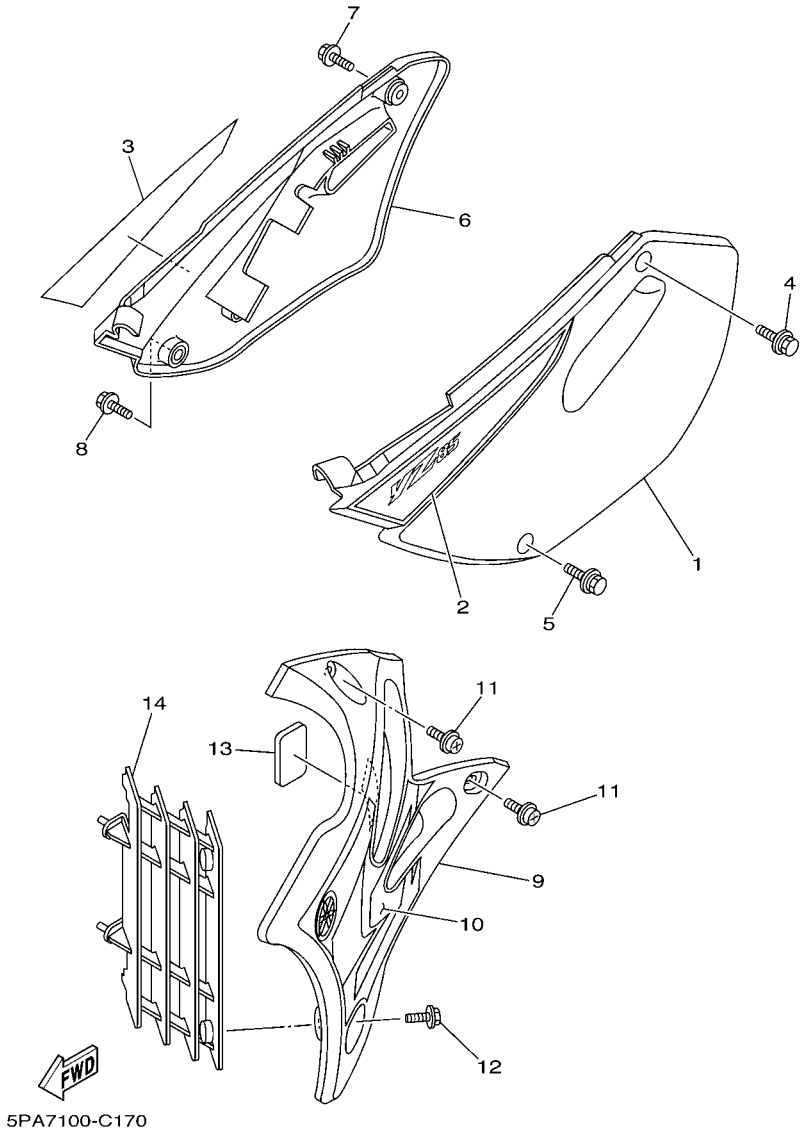

FIG. 17 SIDE COVER

REF. NO.	PART NO.	DESCRIPTION	5PA7	5PA9	5SH7	5SH9		REMARKS
1	5PA–21711–00	COVER, SIDE 1	1	1	1	1		
2	5PA–2173E–10	GRAPHIC 1	1	1	1	1		
3	5PA–2173F–10	GRAPHIC 2	1	1	1	1		
4	90119–06225	BOLT, WITH WASHER	1	1	1	1		
5	90119–06001	BOLT, WITH WASHER	1	1	1	1		
6	5PA–21721–00	COVER, SIDE 2	1	1	1	1		
7	90119–06225	BOLT, WITH WASHER	1	1	1	1		
8	90119–06001	BOLT, WITH WASHER	1	1	1	1		
9	5PA–21731–00	COVER, SIDE 3	1	1	1	1		
10	5PA–24244–20	GRAPHIC, FUEL TANK 1	1	1	1	1		
11	90159–06182	SCREW, WITH WASHER	2	2	2	2		
12	90159–06078	SCREW, WITH WASHER	1	1	1	1		
13	1FK–21746–00	DAMPER	1	1	1	1		
14	5PH–2172A–10	PANEL 1	1	1	1	1		

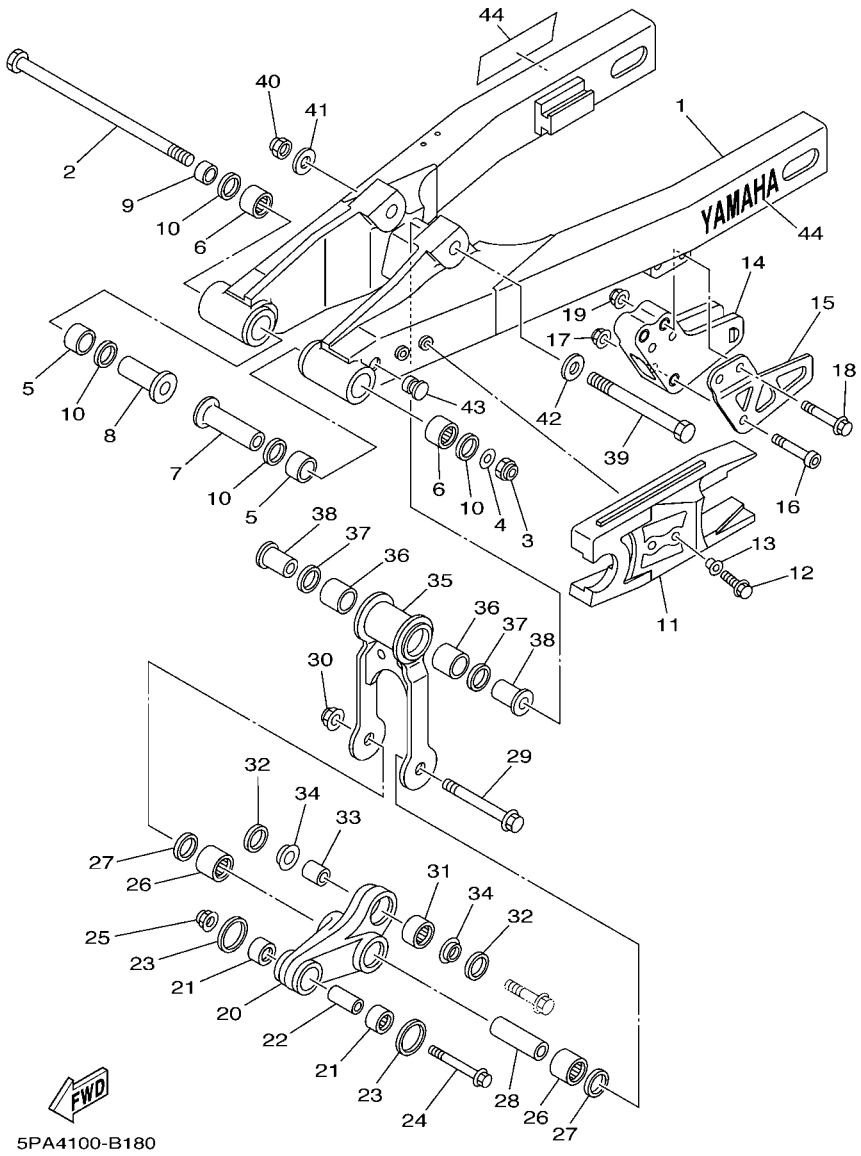

FIG. 18 REAR ARM

REF. NO.	PART NO.	DESCRIPTION	5PA7	5PA9	5SH7	5SH9		REMARKS
1	5PA–22110–00	REAR ARM COMP.	1	1				
	5SH–22110–10	REAR ARM COMP.			1	1		
2	22W–25181–01	AXLE, WHEEL	1	1	1	1		
3	95617–12100	NUT, U	1	1	1	1		
4	90201–124G9	WASHER, PLATE	1	1	1	1		
5	90385–17042	BUSH	2	2	2	2		
6	93317–21746	BEARING	2	2	2	2		
7	90387–127J8	COLLAR	1	1	1	1		
8	90387–127J7	COLLAR	1	1	1	1		
9	90387–1200U	COLLAR	1	1	1	1		
10	93109–17071	OIL SEAL	4	4	4	4		
11	5PA–22151–00	SEAL, GUARD	1	1	1	1		
12	95027–06014	BOLT, FLANGE	2	2	2	2		
13	90387–062X0	COLLAR	2	2	2	2		
14	5PA–22199–00	SUPPORT, CHAIN	1	1	1	1		
15	5PA–22128–00	COVER, THRUST 1	1	1	1	1		
16	92017–06040	BOLT, BUTTON HEAD	1	1	1	1		
17	95607–06200	NUT, SELF U-FLANGE	1	1	1	1		
18	95027–08050	BOLT, FLANGE	2	2	2	2		
19	95607–08200	NUT, SELF-LOCKING	2	2	2	2		
20	5PA–2217A–00	ARM, RELAY	1	1	1	1		
21	93315–21455	BEARING	2	2	2	2		
22	90380–10218	BUSH, SOLID	1	1	1	1		
23	4ES–22129–00	COVER, THRUST 2	2	2	2	2		
24	90105–10582	BOLT, FLANGE	1	1	1	1		
25	95607–10200	NUT, SELF-LOCKING	1	1	1	1		
26	93317–31771	BEARING	2	2	2	2		

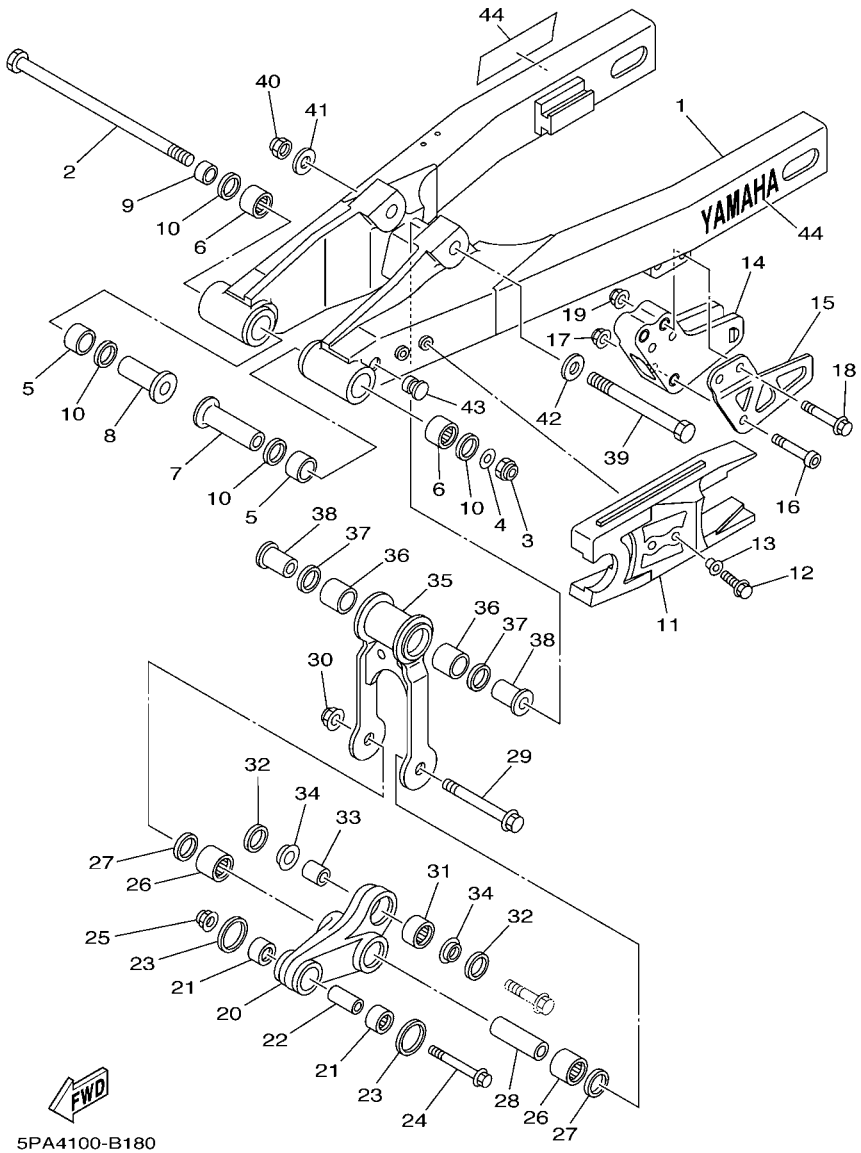

FIG. 18 REAR ARM

REF. NO.	PART NO.	DESCRIPTION	5PA7	5PA9	5SH7	5SH9		REMARKS
27	93101–17062	OIL SEAL	2	2	2	2		
28	90380–12219	BUSH, SOLID	1	1	1	1		
29	90105–12382	BOLT, FLANGE	1	1	1	1		
30	95607–12200	NUT, SELF-LOCKING	1	1	1	1		
31	5PA–22176–00	BEARING	1	1	1	1		
32	5PA–22475–00	SEAL, DUST	2	2	2	2		
33	5PA–22184–00	BUSH	1	1	1	1		
34	5PA–22253–00	COLLAR, DISTANCE	2	2	2	2		
35	4ES–2217F–00	ROD, CONNECTING 1	1	1	1	1		
36	93317–31771	BEARING	2	2	2	2		
37	93101–17062	OIL SEAL	2	2	2	2		
38	90381–12091	BUSH, SOLID	2	2	2	2		
39	90101–12755	BOLT	1	1	1	1		
40	90185–12119	NUT, SELF-LOCKING	1	1	1	1		
41	90201–12749	WASHER, PLATE	1	1	1	1		
42	90201–127J6	WASHER, PLATE	1	1	1	1		
43	90338–10150	PLUG	2	2	2	2		
44	99244–00140	EMBLEM, YAMAHA	2	2	2	2		

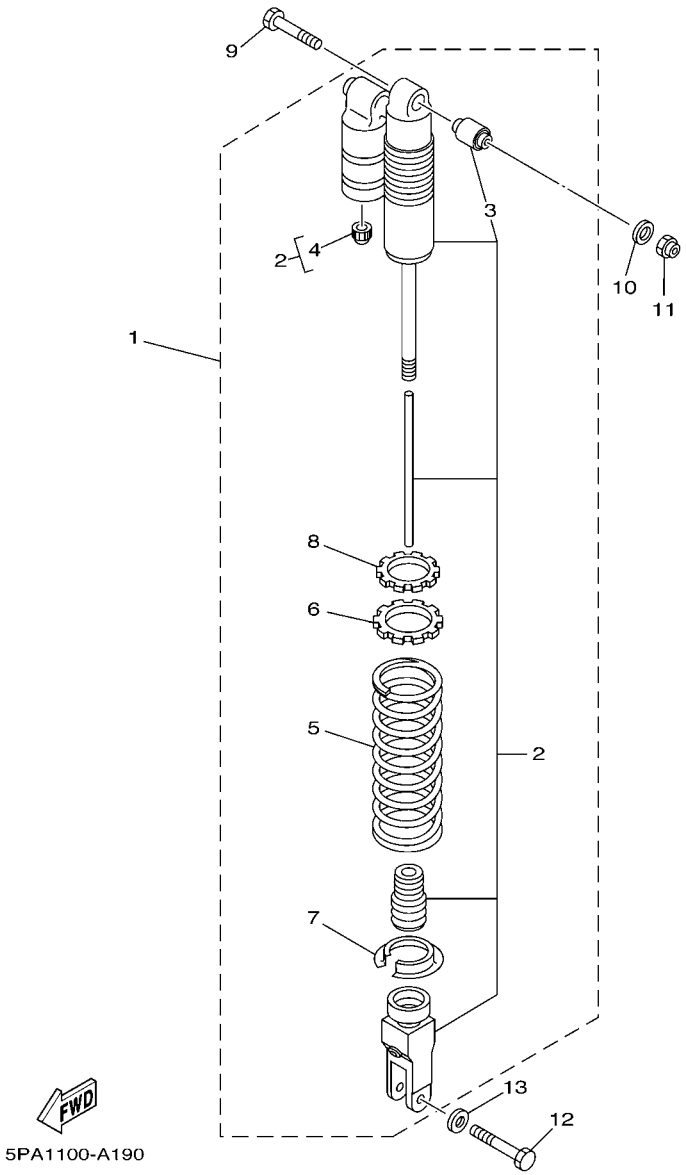

FIG. 19 REAR SUSPENSION

REF. NO.	PART NO.	DESCRIPTION	5PA7	5PA9	5SH7	5SH9		REMARKS
1	5PA–22210–00	SHOCK ABSORBER ASSY, REAR	1					UR FOR USA
	5PA–22210–10	SHOCK ABSORBER ASSY, REAR	1					UR FOR EUR
	5PA–22210–30	SHOCK ABSORBER ASSY, REAR	1					UR FOR CAN
	5PA–22210–40	SHOCK ABSORBER ASSY, REAR	1					UR FOR ZAF
	5PA–22210–20	SHOCK ABSORBER ASSY, REAR		1				FOR JPN
	5SH–22210–10	SHOCK ABSORBER ASSY, REAR			1			FOR EUR
	5SH–22210–20	SHOCK ABSORBER ASSY, REAR				1		FOR JPN
2	5PA–22201–00	.DAMPER SUB ASSY	1					UR FOR USA
	5PA–22201–10	.DAMPER SUB ASSY	1					UR FOR EUR
	5PA–22201–30	.DAMPER SUB ASSY	1					UR FOR CAN
	5PA–22201–40	.DAMPER SUB ASSY	1					UR FOR ZAF
	5PA–22201–20	.DAMPER SUB ASSY		1				FOR JPN
	5SH–22201–10	.DAMPER SUB ASSY			1			FOR EUR
	5SH–22201–20	.DAMPER SUB ASSY				1		FOR JPN
3	4ES–22216–00	..BUSH, REAR SHOCK ABSORBER	1	1	1	1		
4	58T–23184–L0	..CAP, AIR VALVE	1	1	1	1		
5	4ES–22212–F0	.SPRING (K=49N/MM)	1	1				UR EXCEPT FOR EUR
	4ES–22212–K0	.SPRING (K=45N/MM)	1					UR FOR EUR
	4ES–22212–G0	.SPRING (K=47N/MM)			1			FOR EUR
	4ES–22212–H0	.SPRING (K=51N/MM)				1		FOR JPN
6	4ES–22214–00	.GUIDE, SPRING 1	1	1	1	1		
7	3JD–22214–00	.GUIDE, SPRING 1	1	1	1	1		
8	4ES–22251–00	.NUT 1	1	1	1	1		
9	90109–10729	BOLT	1	1	1	1		
10	92907–10600	WASHER, PLATE	1	1	1	1		
11	90185–10110	NUT, SELF-LOCKING	1	1	1	1		
12	90105–10614	BOLT, FLANGE	1	1	1	1		

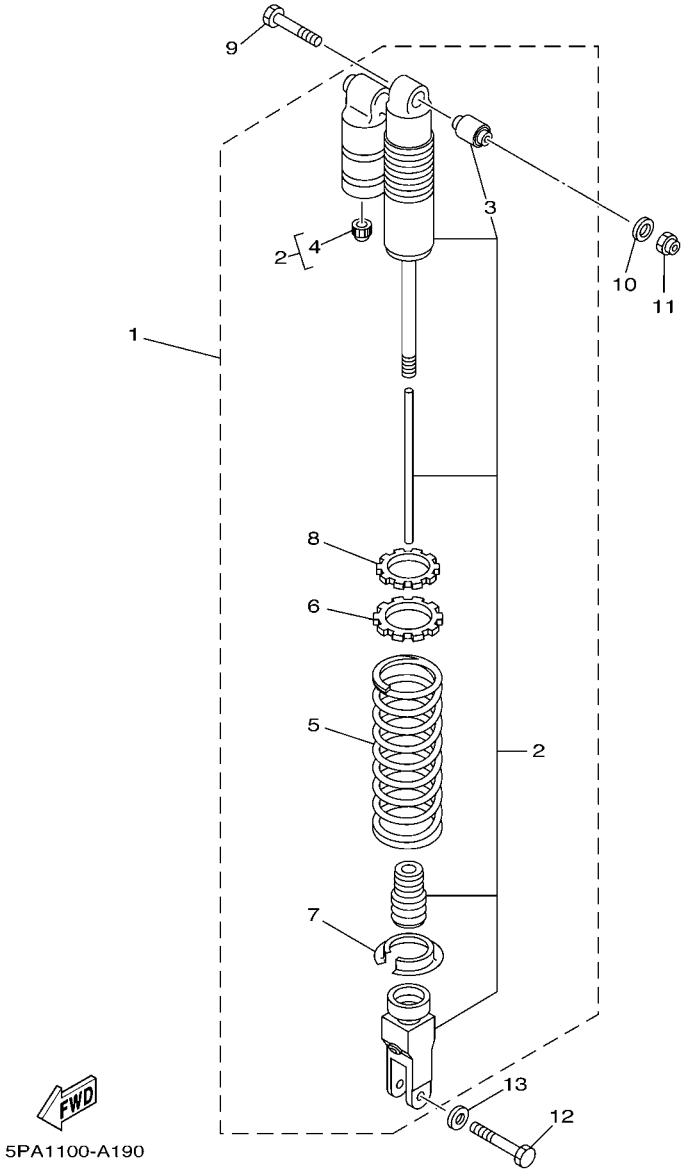

FIG. 19 REAR SUSPENSION

REF. NO.	PART NO.	DESCRIPTION	5PA7	5PA9	5SH7	5SH9		REMARKS
13	90201–112U6	WASHER, PLATE	1	1	1	1		

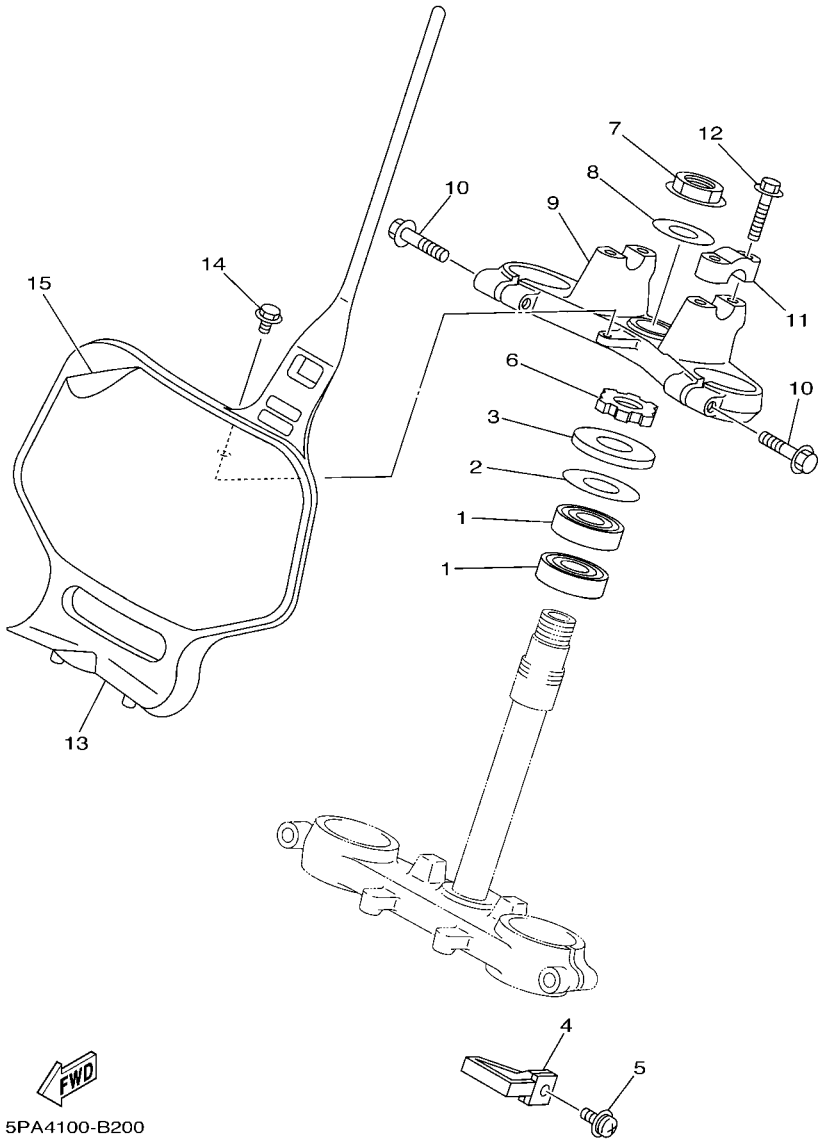

FIG. 20 STEERING

REF. NO.	PART NO.	DESCRIPTION	5PA7	5PA9	5SH7	5SH9		REMARKS
1	93332–00079	BEARING	2	2	2	2		
2	90201–256K5	WASHER, PLATE (T=0.5)	1	1	1	1		
3	1J7–23415–00	COVER, BALL RACE 1	1	1	1	1		
4	4DA–23389–00	GUIDE, CABLE	1	1	1	1		
5	90157–05079	SCREW, PAN HEAD	1	1	1	1		
6	90179–25033	NUT	1	1	1	1		
7	90179–22412	NUT	1	1	1	1		
8	90201–220T0	WASHER, PLATE	1	1	1	1		
9	4ES–23435–00	CROWN, HANDLE	1	1	1	1		
10	95807–08035	BOLT, FLANGE	2	2	2	2		
11	3SP–23441–00	HOLDER, HANDLE UPPER	2	2	2	2		
12	95027–08030	BOLT, FLANGE	4	4	4	4		
13	4ES–23485–20	PLATE, NUMBER	1	1	1	1		
14	95027–06012	BOLT, FLANGE	1	1	1	1		
15	4ES–2339E–00	GRAPHIC 1	1	1	1	1		

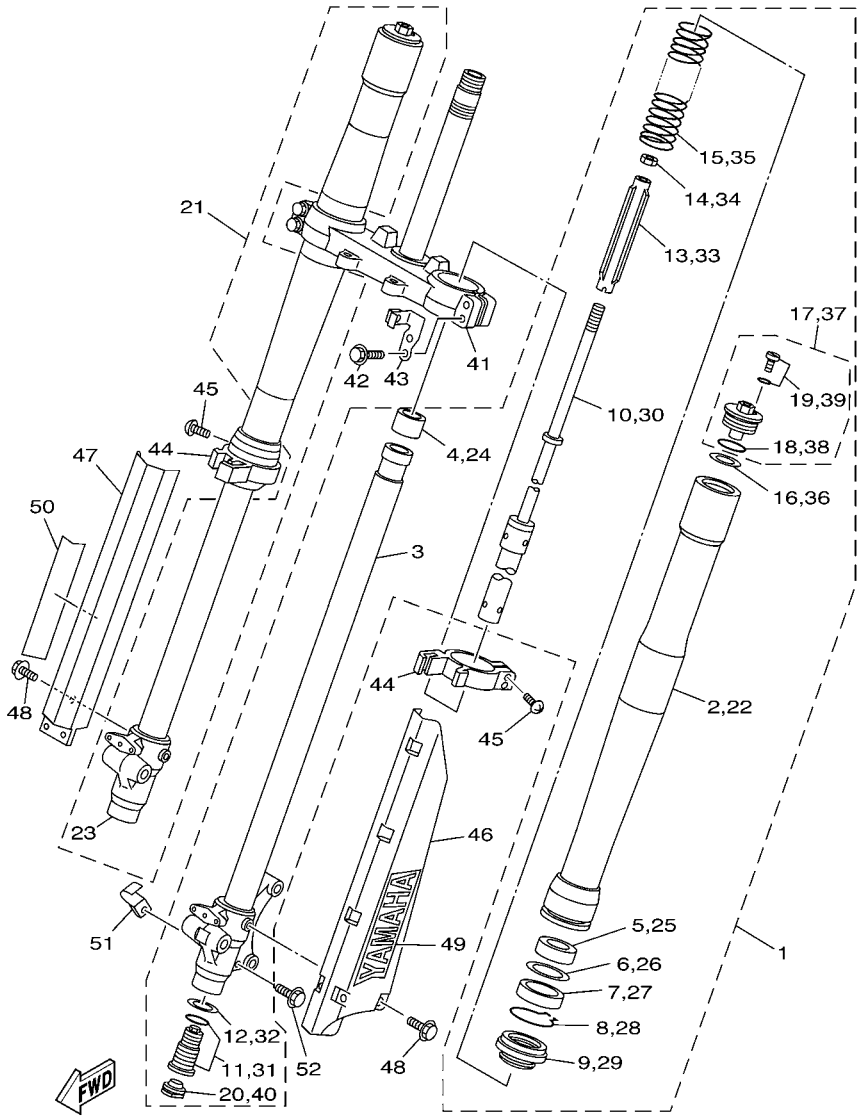

FIG. 21 FRONT FORK

REF. NO.	PART NO.	DESCRIPTION	5PA7	5PA9	5SH7	5SH9		REMARKS
1	5PA–23102–00	FRONT FORK ASSY (L.H)	1	1				
	5SH–23102–00	FRONT FORK ASSY (L.H)			1	1		
2	5PA–23136–00	.TUBE, OUTER (RIGHT)	1	1	1	1		
3	5PA–23120–00	.INNER TUBE COMP.2	1	1	1	1		
4	5PA–23171–00	.PISTON, FRONT FORK	1	1	1	1		
5	5PA–23125–00	.METAL, SLIDE 1	1	1	1	1		
6	5K5–23149–00	.WASHER, SPRING UPPER	1	1	1	1		
7	4ES–23145–00	.OIL SEAL	1	1	1	1		
8	4A1–23156–00	.CLIP, OIL SEAL	1	1	1	1		
9	4ES–23144–00	.SEAL, DUST	1	1	1	1		
10	5PA–23170–00	.CYLINDER COMP., FRONT FORK	1	1	1	1		
11	5PA–2316A–00	.VALVE COMP.	1	1				
	5SH–2316A–00	.VALVE COMP.			1	1		
12	2HH–23158–L0	.GASKET	1	1	1	1		
13	4ES–23142–00	.SEAT, SPRING UPPER	1	1	1	1		
14	3XJ–23357–L0	.NUT	1	1	1	1		
15	4ES–23141–40	.SPRING, FRONT FORK(K=2.8N/MM)	1	1				
	4LB–23141–10	.SPRING, FRONT FORK(K=2.9N/MM)			1	1		
16	5PA–23149–00	.WASHER, SPRING UPPER	1	1	1	1		
17	4ES–23111–10	.BOLT, CAP	1	1	1	1		
18	4V4–23188–L0	..O-RING	1	1	1	1		
19	3JD–23394–00	..BOLT, SPECIAL	1	1	1	1		
20	3JD–2312G–L0	.PLUG	1	1	1	1		
21	5PA–23103–00	FRONT FORK ASSY (R.H)	1	1				
	5SH–23103–00	FRONT FORK ASSY (R.H)			1	1		
22	5PA–23136–00	.TUBE, OUTER (RIGHT)	1	1	1	1		
23	5PA–23110–00	.INNER TUBE COMP.1	1	1	1	1		

FIG. 21 FRONT FORK

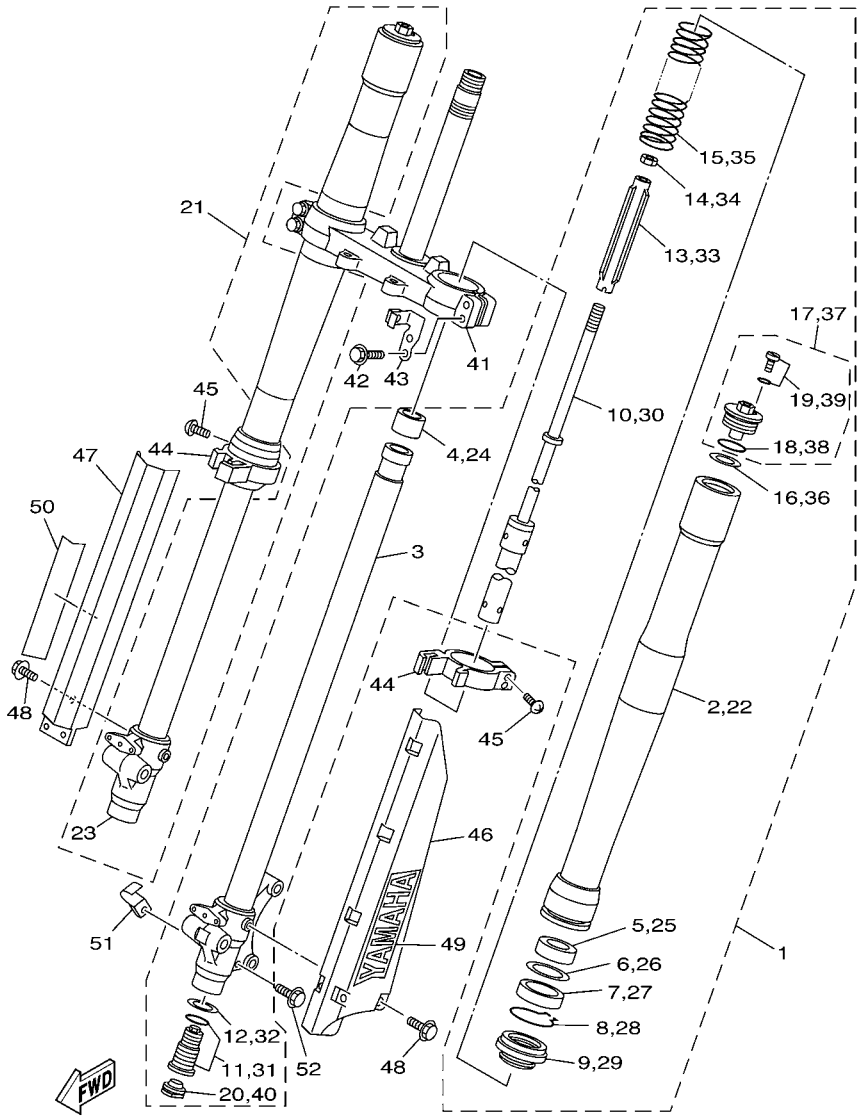

REF. NO.	PART NO.	DESCRIPTION	5PA7	5PA9	5SH7	5SH9		REMARKS
24	5PA–23171–00	.PISTON, FRONT FORK	1	1	1	1		
25	5PA–23125–00	.METAL, SLIDE 1	1	1	1	1		
26	5K5–23149–00	.WASHER, SPRING UPPER	1	1	1	1		
27	4ES–23145–00	.OIL SEAL	1	1	1	1		
28	4A1–23156–00	.CLIP, OIL SEAL	1	1	1	1		
29	4ES–23144–00	.SEAL, DUST	1	1	1	1		
30	5PA–23170–00	.CYLINDER COMP., FRONT FORK	1	1	1	1		
31	5PA–2316A–00	.VALVE COMP.	1	1				
	5SH–2316A–00	.VALVE COMP.			1	1		
32	2HH–23158–L0	.GASKET	1	1	1	1		
33	4ES–23142–00	.SEAT, SPRING UPPER	1	1	1	1		
34	3XJ–23357–L0	.NUT	1	1	1	1		
35	4ES–23141–40	.SPRING, FRONT FORK(K=2.8N/MM)	1	1				
	4LB–23141–10	.SPRING, FRONT FORK(K=2.9N/MM)			1	1		
36	5PA–23149–00	.WASHER, SPRING UPPER	1	1	1	1		
37	4ES–23111–10	.BOLT, CAP	1	1	1	1		
38	4V4–23188–L0	..O-RING	1	1	1	1		
39	3JD–23394–00	..BOLT, SPECIAL	1	1	1	1		
40	3JD–2312G–L0	.PLUG	1	1	1	1		
41	5PA–23340–01	UNDER BRACKET COMP.	1	1	1	1		
42	5NY–23346–L0	BOLT 1	4	4	4	4		
43	5PA–2331E–00	GUIDE, CABLE	1	1	1	1		
44	4ES–2314F–00	PROTECTER GUIDE COMP., 1	2	2	2	2		
45	4V4–23194–L0	SCREW, BOOT BAND	4	4	4	4		
46	5PA–2314H–L0	PROTECTER COMP., 1	1	1	1	1		
47	5PA–2314J–L0	PROTECTER COMP., 2	1	1	1	1		
48	95024–06010	BOLT, FLANGE	6	6	6	6		

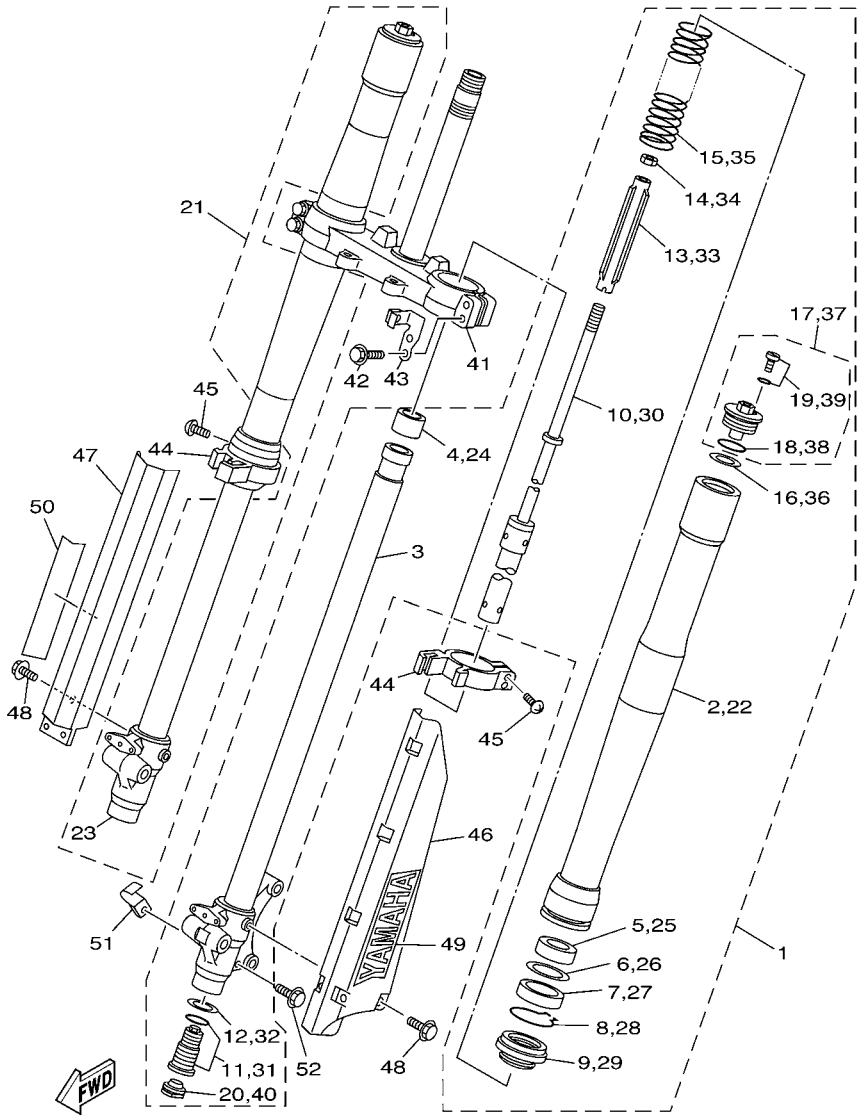

5PA7100-C210

FIG. 21 FRONT FORK

REF. NO.	PART NO.	DESCRIPTION	5PA7	5PA9	5SH7	5SH9		REMARKS
49	4XL–2153A–10	EMBLEM, YAMAHA	1	1	1	1		
50	4XL–2153A–10	EMBLEM, YAMAHA	1	1	1	1		
51	4ES–23318–00	HOLDER, CABLE 1	1	1	1	1		
52	95027–06016	BOLT, FLANGE	1	1	1	1		

FIG. 22 FUEL TANK

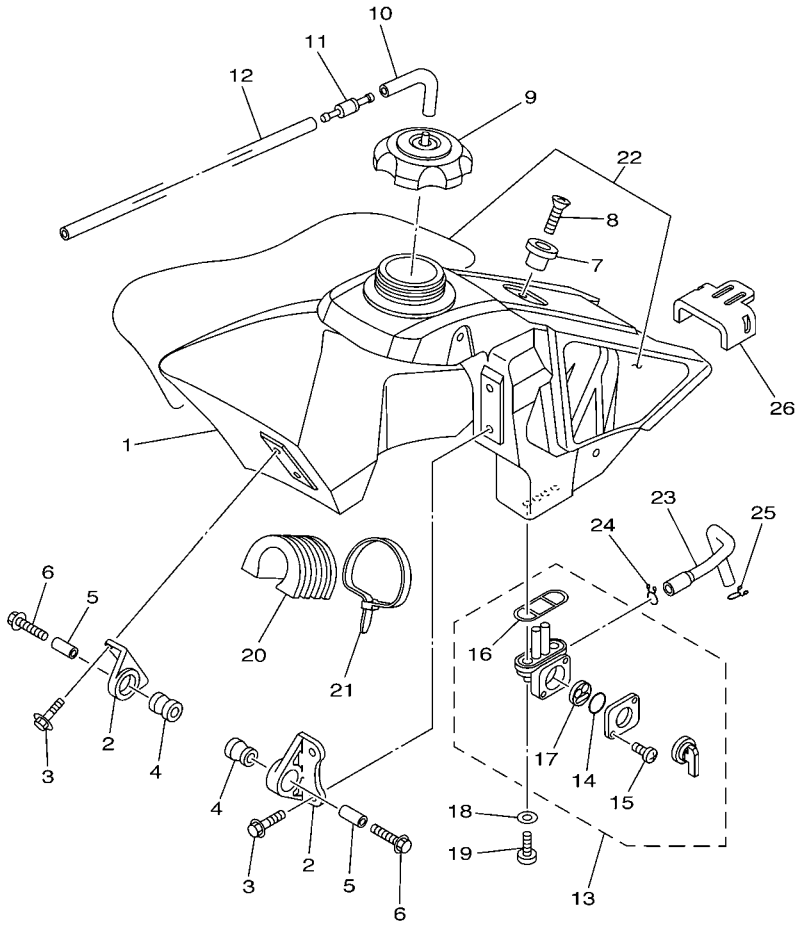

5PA7100-C220

REF. NO.	PART NO.	DESCRIPTION	5PA7	5PA9	5SH7	5SH9		REMARKS
1	5PA–24110–10	FUEL TANK COMP.	1	1	1	1		
2	24X–24144–00	HOLDER, DAMPER	2	2	2	2		
3	95027–06016	BOLT, FLANGE	4	4	4	4		
4	90480–18549	GROMMET	2	2	2	2		
5	90387–06027	COLLAR	2	2	2	2		
6	90119–06190	BOLT, WITH WASHER	2	2	2	2		
7	4EW–2412F–00	BRACKET, SEAT	1	1	1	1		
8	98707–06025	SCREW, FLAT HEAD	1	1	1	1		
9	5NY–24610–00	CAP ASSY	1	1	1	1		
10	90445–09220	HOSE (L30)	1	1	1	1		
11	3XJ–24380–00	PIPE JOINT ASSY	1	1	1	1		
12	90445–09300	HOSE (L355)	1	1	1	1		
13	4DP–24500–00	FUEL COCK ASSY 1	1	1	1	1		
14	3AJ–24534–00	.SEAL, COCK	1	1	1	1		
15	97801–03008	.SCREW, PAN HEAD	2	2	2	2		
16	4X8–24512–00	.O-RING	1	1	1	1		
17	3AJ–24523–00	.VALVE PACKING	1	1	1	1		
18	90202–05193	WASHER, PLATE	2	2	2	2		
19	90149–06011	SCREW	2	2	2	2		
20	5PA–24182–00	DAMPER, LOCATING 2	1	1	1	1		
21	90465–13275	CLAMP	1	1	1	1		
22	5PA–24240–20	GRAPHIC SET	1	1	1	1		
23	5PA–24311–00	PIPE, FUEL 1	1	1	1	1		
24	90467–10008	CLIP	1	1	1	1		
25	90467–09002	CLIP	1	1	1	1		
26	5PA–24181–00	DAMPER, LOCATING 1	1	1	1	1		

FIG. 23 SEAT

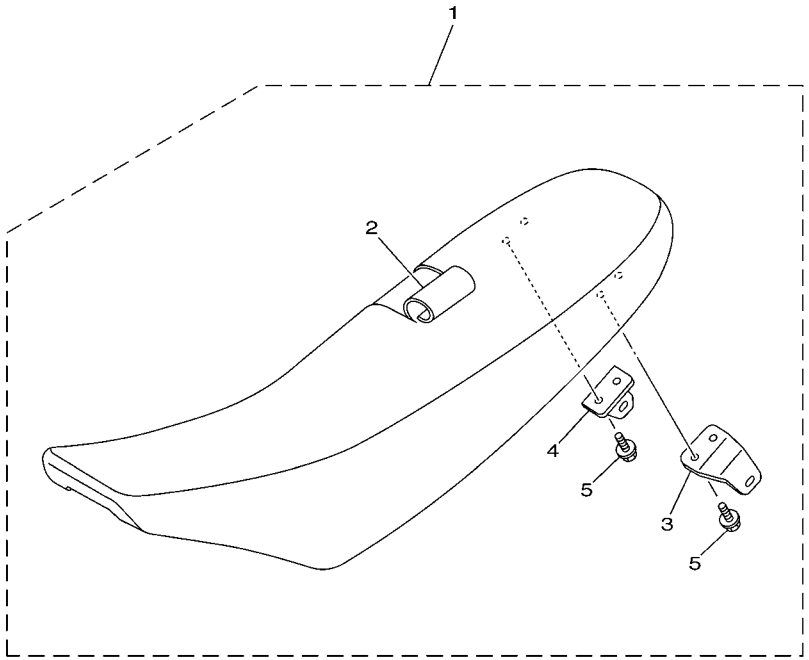

5PA1100-A230

REF. NO.	PART NO.	DESCRIPTION	5PA7	5PA9	5SH7	5SH9		REMARKS
1	5PA–24770–10	SEMI-DOUBLE SEAT ASSY	1	1	1	1		
2	5PA–2470F–00	.SEAT COVER COMP.	1	1	1	1		
3	5PA–24718–00	.BRACKET, SEAT	1	1	1	1		
4	5PA–24728–00	.BRACKET, SEAT	1	1	1	1		
5	95027–06012	.BOLT, FLANGE	4	4	4	4		

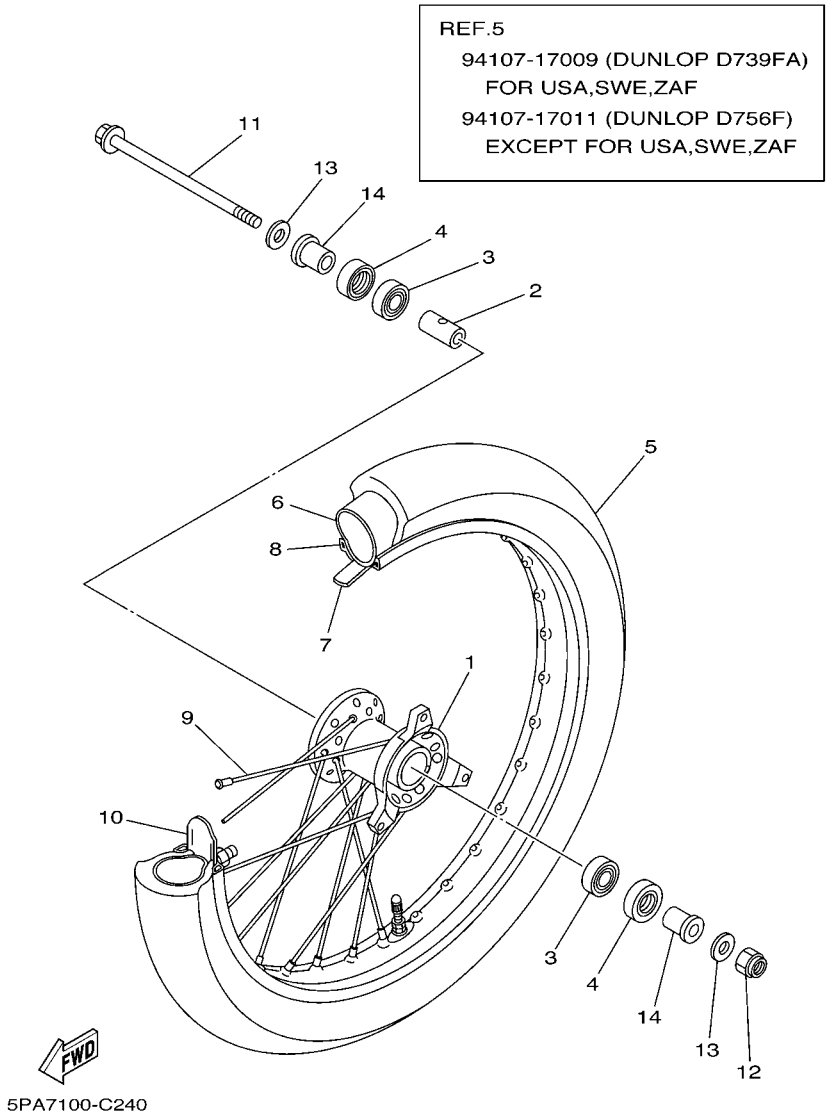

FIG. 24 FRONT WHEEL

REF. NO.	PART NO.	DESCRIPTION	5PA7	5PA9	5SH7	5SH9		REMARKS
1	4ES–25111–00	HUB, FRONT	1	1	1	1		
2	90387–124H0	COLLAR	1	1	1	1		
3	93306–20120	BEARING	2	2	2	2		
4	93106–20031	OIL SEAL	2	2	2	2		
5	94107–17009	TIRE (70/100-17 40M D739FA)	1	1				DUNLOP
	94107–17011	TIRE (70/100-17 40M D756F)	1					DUNLOP
	94107–19011	TIRE (70/100-19 42M D756F)			1			DUNLOP
	94107–19009	TIRE (70/100-19 42M D739FA)				1		DUNLOP
6	94207–17284	TUBE (70/100-17M/C TR4)	1	1				DUNLOP
	94207–19290	TUBE (70/100-19M/C TR4)			1	1		DUNLOP
7	94307–17166	BAND, RIM (80/90,70/100-17)	1	1				DUNLOP
	94307–19170	BAND, RIM (70/100-19)			1	1		DUNLOP
8	94414–17530	RIM (1.40-17)	1	1				
	94414–19521	RIM (1.40-19)			1	1		
9	4ES–25104–20	SPOKE SET, FRONT	1	1				
	4LB–25104–00	SPOKE SET, FRONT			1	1		
10	1T1–25194–00	SPACER, BEAD	1	1	1	1		
11	4ES–25181–00	AXLE, WHEEL	1	1	1	1		
12	90185–12046	NUT, SELF-LOCKING	1	1	1	1		
13	90201–12362	WASHER, PLATE	2	2	2	2		
14	4ES–25183–10	COLLAR, WHEEL	2	2	2	2		

FIG. 25 FRONT BRAKE CALIPER

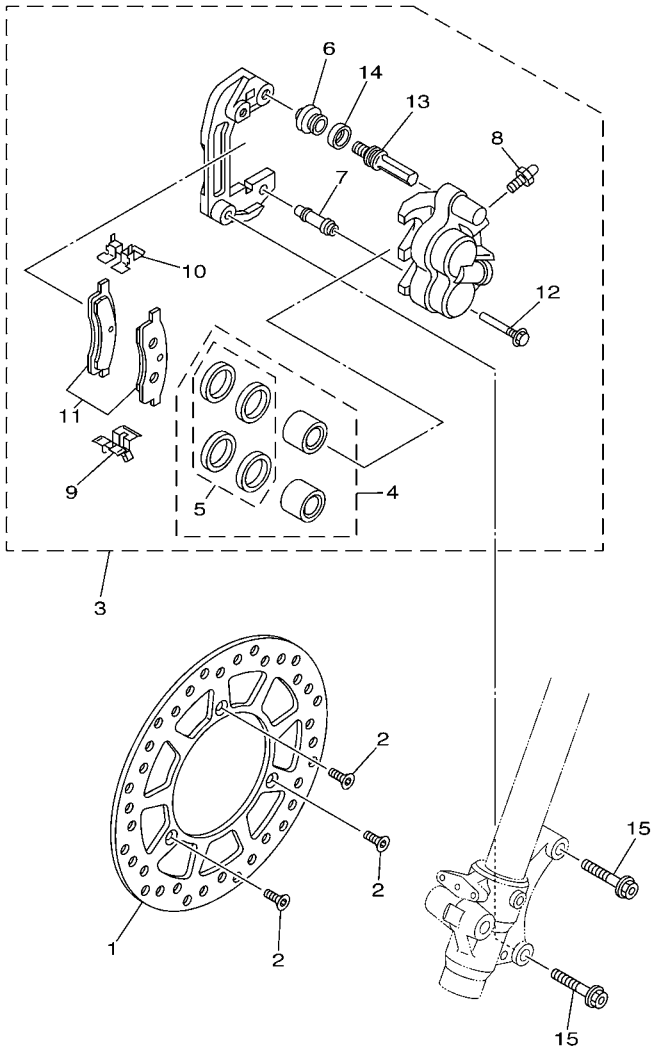

5PA7100-C250

REF. NO.	PART NO.	DESCRIPTION	5PA7	5PA9	5SH7	5SH9		REMARKS
1	5PA–2582T–00	DISC, BRAKE (LEFT)	1	1	1	1		
2	90149–06327	SCREW	3	3	3	3		
3	5PA–2580T–00	CALIPER ASSY (LEFT)	1	1	1	1		
4	4ES–W0057–10	.PISTON ASSY, CALIPER	1	1	1	1		
5	4ES–W0047–10	..CALIPER SEAL KIT	1	1	1	1		
6	5R2–25937–00	.BOOT 2	1	1	1	1		
7	56A–25937–00	.BOOT 2	1	1	1	1		
8	51L–W0048–00	.BLEED SCREW KIT	1	1	1	1		
9	56A–25919–00	.SUPPORT, PAD	1	1	1	1		
10	56A–25919–10	.SUPPORT, PAD	1	1	1	1		
11	5PA–W0045–00	.BRAKE PAD KIT	1	1	1	1		
12	56A–25926–00	.BOLT	1	1	1	1		
13	34X–25914–00	.PIN, SLIDE	1	1	1	1		
14	4X8–25913–00	.RETAINER	1	1	1	1		
15	90105–08211	BOLT, FLANGE	2	2	2	2		

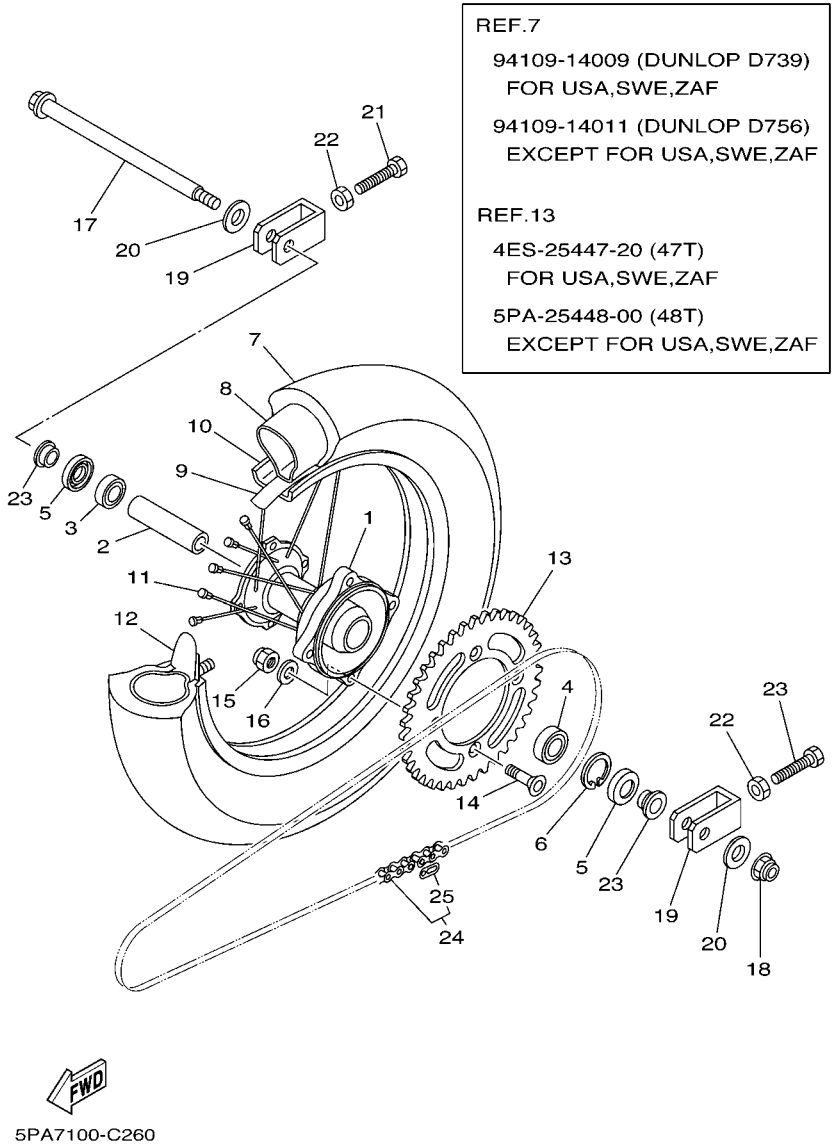

FIG. 26 REAR WHEEL

REF. NO.	PART NO.	DESCRIPTION	5PA7	5PA9	5SH7	5SH9		REMARKS
1	4ES–25311–00	HUB, REAR	1	1	1	1		
2	4ES–25383–00	COLLAR, WHEEL	1	1	1	1		
3	93306–00203	BEARING (B6002)	1	1	1	1		
4	93306–20203	BEARING (B6202RS)	1	1	1	1		
5	93102–20009	OIL SEAL	2	2	2	2		
6	99009–35500	CIRCLIP	1	1	1	1		
7	94109–14009	TIRE (90/100-14 49M D739)	1	1				DUNLOP
	94109–14011	TIRE (90/100-14 49M D756)	1					DUNLOP
	94109–16011	TIRE (90/100-16 52M D756)			1			DUNLOP
	94109–16009	TIRE (90/100-16 52M D739)				1		DUNLOP
8	94208–14285	TUBE (80-90/100-14M/C TR4)	1	1				DUNLOP
	94209–16291	TUBE (90/100-16M/C TR4)			1	1		DUNLOP
9	94308–14165	BAND, RIM (80-90/100-14)	1	1				DUNLOP
	94307–16171	BAND, RIM (70-90/100-16)			1	1		DUNLOP
10	94416–14529	RIM (1.60-14)	1	1				
	94418–16522	RIM (1.85-16)			1	1		
11	4ES–25304–20	SPOKE SET, REAR	1	1				
	4LB–25304–00	SPOKE SET, REAR			1	1		
12	5X2–25394–00	SPACER, BEAD	1	1				
	1T2–25394–00	SPACER, BEAD			1	1		
13	4ES–25447–20	SPROCKET, DRIVEN (47T)	1	1				UR STD AFAM
	5PA–25448–00	SPROCKET, DRIVEN (48T)	1					UR STD
	5PA–25446–00	SPROCKET, DRIVEN (46T)	1	1				AP
	5PA–25448–00	SPROCKET, DRIVEN (48T)	1	1				AP
	5PA–25449–00	SPROCKET, DRIVEN (49T)	1					AP
	5PA–25452–00	SPROCKET, DRIVEN (52T)			1	1		UR STD
	5PA–25451–00	SPROCKET, DRIVEN (51T)			1	1		AP

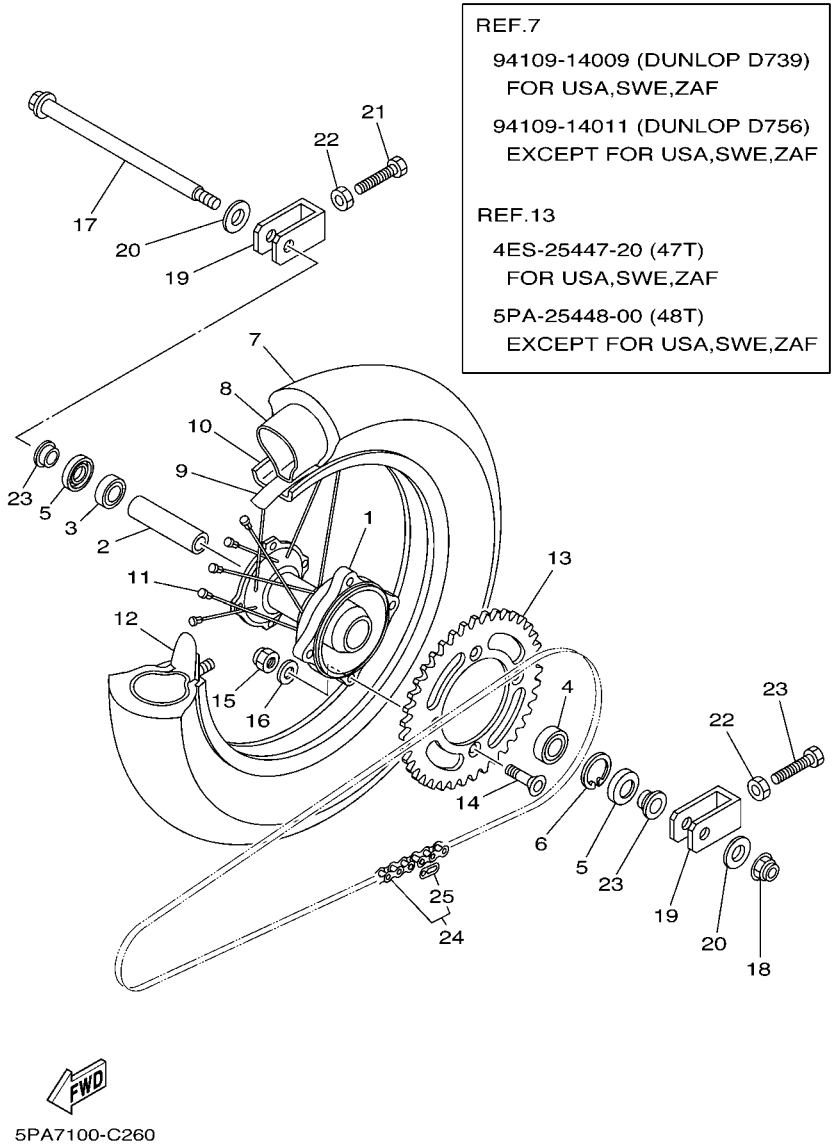

FIG. 26 REAR WHEEL

REF. NO.	PART NO.	DESCRIPTION	5PA7	5PA9	5SH7	5SH9		REMARKS
13	5PA–25453–00	SPROCKET, DRIVEN (53T)			1	1		AP
14	90109–081G2	BOLT	4	4	4	4		
15	90185–08169	NUT, SELF-LOCKING	4	4	4	4		
16	90201–086P8	WASHER, PLATE	4	4	4	4		
17	4ES–25381–01	AXLE, WHEEL	1	1	1	1		
18	90185–14142	NUT, SELF-LOCKING	1	1	1	1		
19	5PA–25388–00	PULLER, CHAIN 1	2	2	2	2		
20	90201–152L7	WASHER, PLATE	2	2	2	2		
21	90101–08475	BOLT	2	2	2	2		
22	95307–08700	NUT	2	2	2	2		
23	4ES–25383–10	COLLAR, WHEEL	2	2	2	2		
24	9Y582–00117	CHAIN (DID 428DS 118L)	1	1				
	9Y582–00123	CHAIN (DID 428DS 124L)			1	1		
25	94682–00001	.JOINT,CHAIN (DID 428DS-RJ)	1	1	1	1		

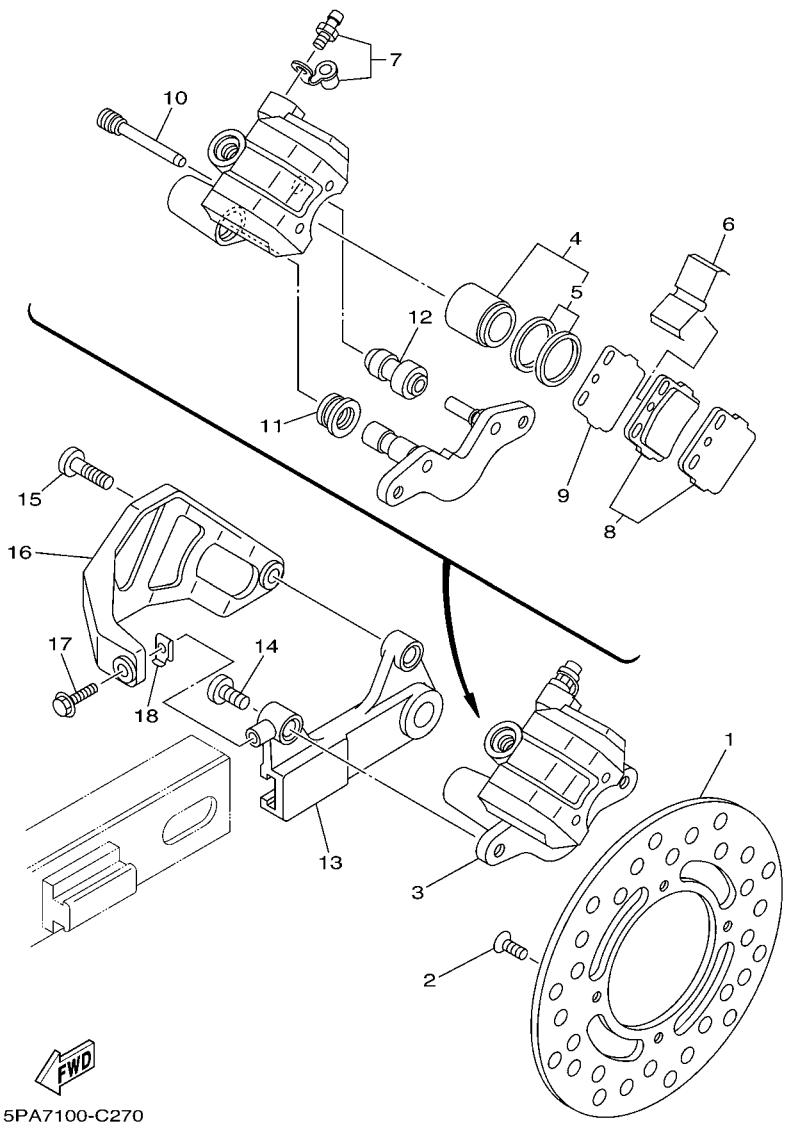

FIG. 27 REAR BRAKE CALIPER

REF. NO.	PART NO.	DESCRIPTION	5PA7	5PA9	5SH7	5SH9		REMARKS
1	5PA–2582W–00	DISC, REAR BRAKE 2	1	1	1	1		
2	90149–06327	SCREW	4	4	4	4		
3	5PA–2580W–00	CALIPER ASSY, REAR 2	1	1	1	1		
4	4EW–W0057–50	.PISTON ASSY, CALIPER	1	1	1	1		
5	4ES–W0047–00	..CALIPER SEAL KIT	1	1	1	1		
6	1UY–25919–51	.SUPPORT, PAD	1	1	1	1		
7	1UY–W0048–50	.BLEED SCREW KIT	1	1	1	1		
8	5PA–W0046–50	.BRAKE PAD KIT 2	1	1	1	1		
9	3GD–25827–00	.SHIM, CALIPER	1	1	1	1		
10	3GD–25933–00	.PIN, PAD	2	2	2	2		
11	1UY–25917–51	.BOOT, CALIPER	1	1	1	1		
12	1UY–25937–51	.BOOT 2	1	1	1	1		
13	4ES–25920–00	SUPT. BRKT. ASSY.	1	1	1	1		
14	90110–08096	BOLT, HEXAGON SOCKET HEAD	1	1	1	1		
15	90109–08718	BOLT	1	1	1	1		
16	4ES–27491–00	PROTECTOR	1	1	1	1		
17	95027–06012	BOLT, FLANGE	1	1	1	1		
18	4ES–27114–00	STOPPER, MAIN STAND	1	1	1	1		

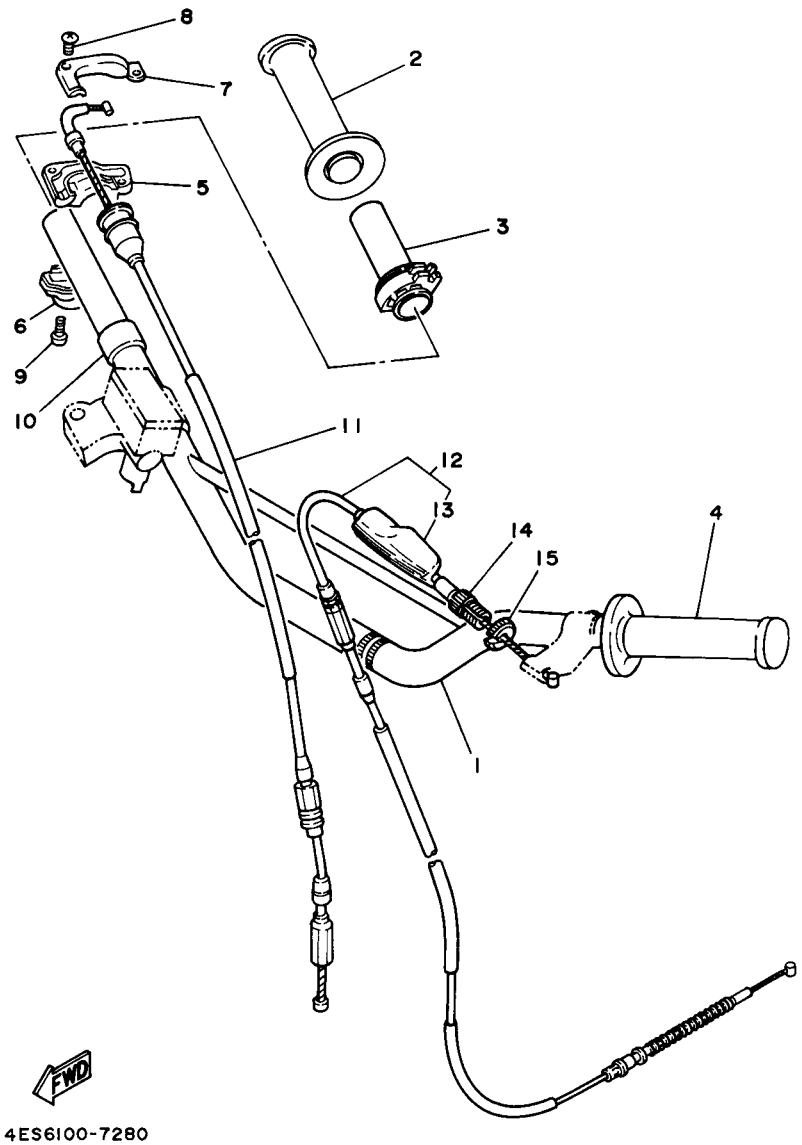

FIG. 28 STEERING HANDLE & CABLE

REF. NO.	PART NO.	DESCRIPTION	5PA7	5PA9	5SH7	5SH9		REMARKS
1	5PA–26111–00	HANDLEBAR	1	1	1	1		
2	4GY–26242–00	GRIP (RIGHT)	1	1	1	1		
3	22W–26243–00	TUBE, THROTTLE GUIDE	1	1	1	1		
4	4GY–26241–00	GRIP	1	1	1	1		
5	5X2–26281–00	CAP, GRIP UPPER	1	1	1	1		
6	322–26282–00	CAP, GRIP LOWER	1	1	1	1		
7	5X2–2628H–01	CAP, WIRE	1	1	1	1		
8	98707–04012	SCREW, FLAT HEAD	2	2	2	2		
9	98507–05016	SCREW, PAN HEAD	2	2	2	2		
10	90387–227H7	COLLAR	1	1	1	1		
11	5PA–26311–00	CABLE, THROTTLE 1	1	1	1	1		
12	4ES–26335–11	CABLE, CLUTCH	1	1	1	1		
13	498–26372–00	.COVER, HANDLE LEVER 1	1	1	1	1		
14	90123–08046	BOLT	1	1	1	1		
15	90179–08148	NUT	1	1	1	1		

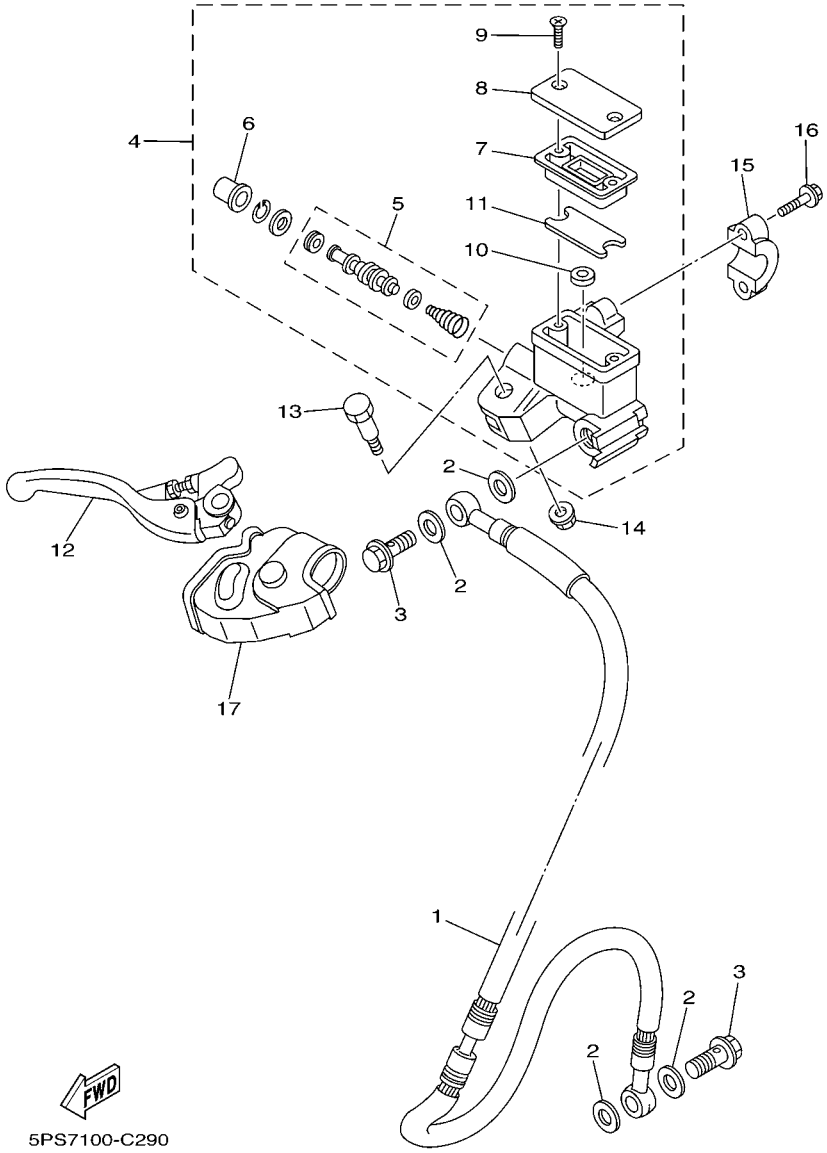

FIG. 29 FRONT MASTER CYLINDER

REF. NO.	PART NO.	DESCRIPTION	5PA7	5PA9	5SH7	5SH9		REMARKS
1	4ES–25872–10	HOSE, BRAKE 1	1	1				
	5SH–25872–00	HOSE, BRAKE 1			1	1		
2	90201–10118	WASHER, PLATE	4	4	4	4		
3	90401–10168	BOLT, UNION	2	2	2	2		
4	5XE–W2587–00	MASTER CYLINDER SUB ASSY	1	1	1	1		
5	5NY–W0041–00	.CYLINDER KIT, MASTER	1	1	1	1		
6	5NY–25868–00	.BOOT, MASTER CYLINDER	1	1	1	1		
7	5XE–25854–00	.DIAPHRAGM, RESERVOIR	1	1	1	1		
8	5MV–25852–01	.CAP, RESERVOIR	1	1	1	1		
9	98706–04012	.SCREW, FLAT HEAD	2	2	2	2		
10	5CG–25715–00	.SEPARATOR ASSY	1	1	1	1		
11	5XE–25853–00	.FLOAT, RESERVOIR	1	1	1	1		
12	5MV–83922–00	LEVER 2	1	1	1	1		
13	5MV–2589F–00	BOLT, LEVER	1	1	1	1		
14	95701–06500	NUT, FLANGE	1	1	1	1		
15	5MV–25867–00	BRACKET, MASTER CYLINDER	1	1	1	1		
16	5MV–25833–00	BOLT, FITTING	2	2	2	2		
17	5NY–26372–00	COVER, HANDLE LEVER 1	1	1	1	1		

FIG. 30 STAND & FOOTREST

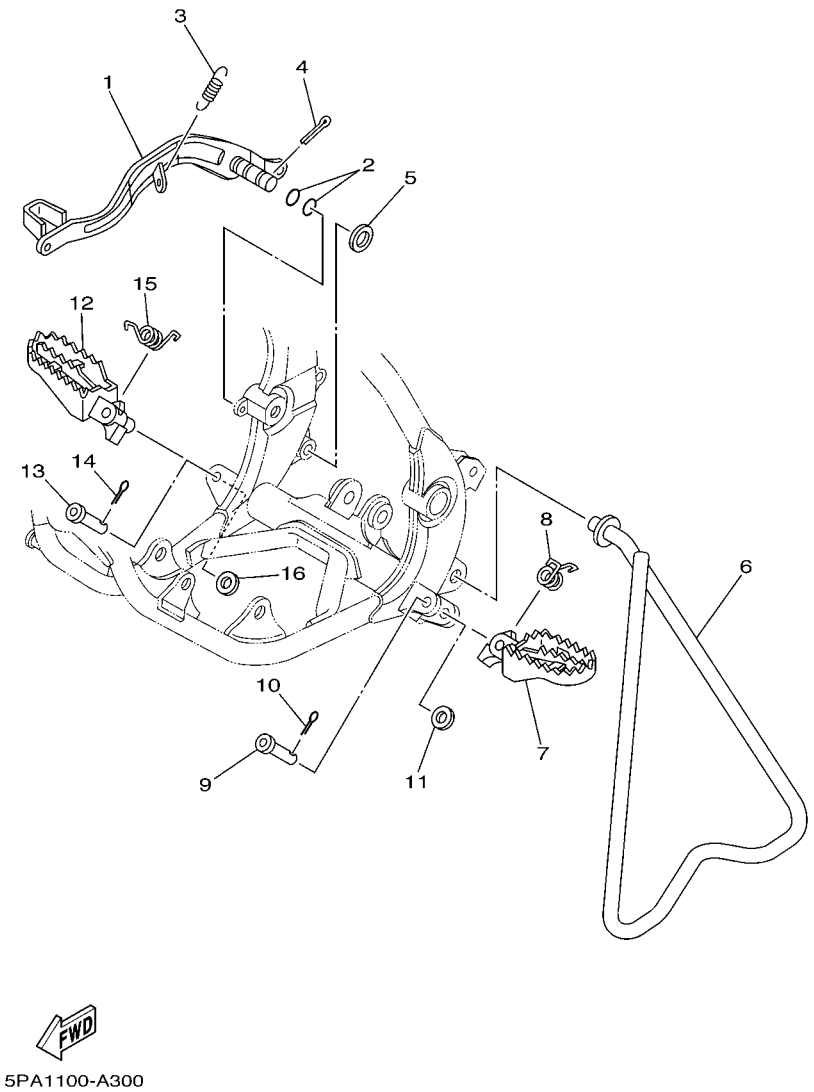

REF. NO.	PART NO.	DESCRIPTION	5PA7	5PA9	5SH7	5SH9		REMARKS
1	5PA–27211–00	PEDAL, BRAKE	1	1	1	1		
2	93210–11073	O-RING	2	2	2	2		
3	90506–15480	SPRING, TENSION	1	1	1	1		
4	91401–20025	PIN, COTTER	1	1	1	1		
5	90201–15700	WASHER, PLATE	1	1	1	1		
6	4ES–27311–00	STAND, SIDE	1	1				
	4LB–27311–00	STAND, SIDE			1	1		
7	5ET–27411–00	FOOTREST 1	1	1	1	1		
8	90508–282B8	SPRING, TORSION	1	1	1	1		
9	90240–10142	PIN, CLEVIS	1	1	1	1		
10	91401–25015	PIN, COTTER	1	1	1	1		
11	90201–10119	WASHER, PLATE	1	1	1	1		
12	5ET–27421–00	FOOTREST 2	1	1	1	1		
13	90240–10142	PIN, CLEVIS	1	1	1	1		
14	91401–25015	PIN, COTTER	1	1	1	1		
15	90508–282B9	SPRING, TORSION	1	1	1	1		
16	90201–10119	WASHER, PLATE	1	1	1	1		

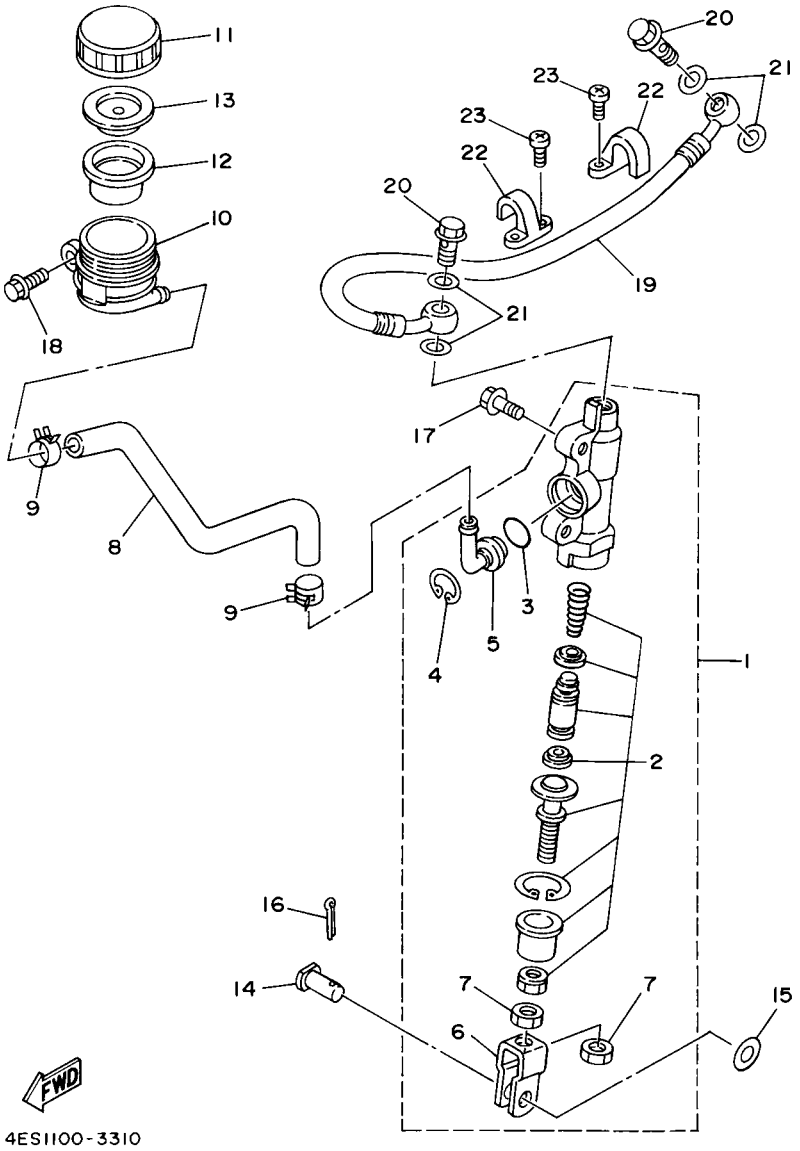

FIG. 31 REAR MASTER CYLINDER

REF. NO.	PART NO.	DESCRIPTION	5PA7	5PA9	5SH7	5SH9		REMARKS
1	4ES–2583V–00	RR. MASTER CYLINDER ASSY.	1	1	1	1		
2	1FK–W0042–50	.CYLINDER KIT, MASTER	1	1	1	1		
3	93210–15620	.O-RING	1	1	1	1		
4	2VN–25866–00	.CIRCLIP	1	1	1	1		
5	2VN–2582A–50	.JOINT	1	1	1	1		
6	2YK–27222–00	.JOINT	1	1	1	1		
7	95307–08600	.NUT	2	2	2	2		
8	4ES–25895–00	HOSE, RESERVOIR	1	1	1	1		
9	90467–11044	CLIP	2	2	2	2		
10	4EW–25894–00	TANK, RESERVOIR	1	1	1	1		
11	3XP–25852–50	CAP, RESERVOIR	1	1	1	1		
12	2VN–25854–00	DIAPHRAGM, RESERVOIR	1	1	1	1		
13	2VN–25855–00	BUSH,DIAPHRAGM	1	1	1	1		
14	90240–08124	PIN, CLEVIS	1	1	1	1		
15	90201–08083	WASHER, PLATE	1	1	1	1		
16	91401–16012	PIN, COTTER	1	1	1	1		
17	95027–06016	BOLT, FLANGE	2	2	2	2		
18	95027–06012	BOLT, FLANGE	1	1	1	1		
19	5PA–25873–00	HOSE, BRAKE 2	1	1				
	5SH–25873–00	HOSE, BRAKE 2			1	1		
20	90401–10168	BOLT, UNION	2	2	2	2		
21	90201–10118	WASHER, PLATE	4	4	4	4		
22	2VM–25876–00	HOLDER, BRAKE HOSE 2	2	2	2	2		
23	98507–05010	SCREW, PAN HEAD	4	4	4	4		

FIG. 32 GENERATOR

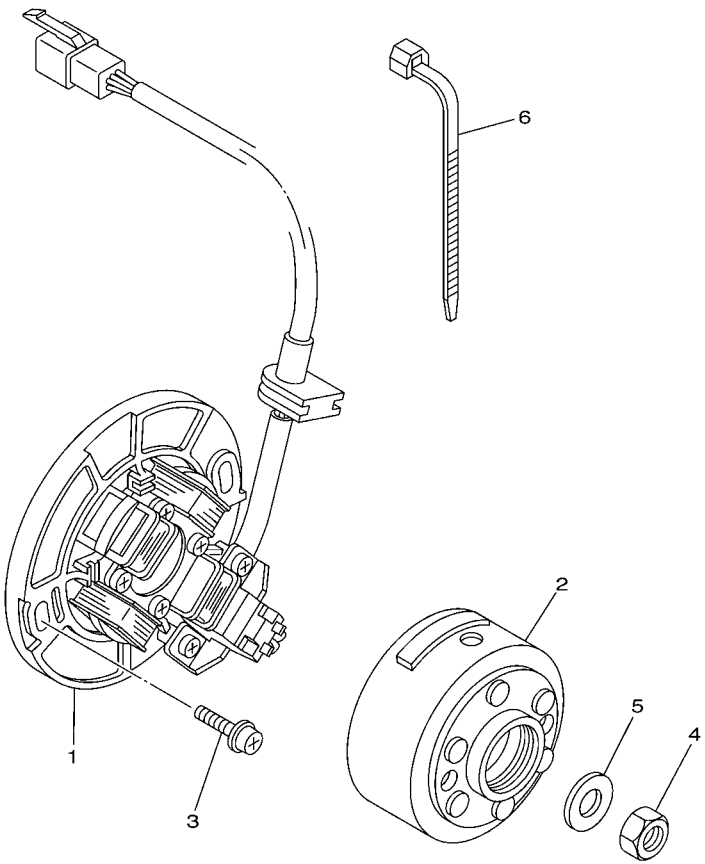

5PA1100-A320

REF. NO.	PART NO.	DESCRIPTION	5PA7	5PA9	5SH7	5SH9		REMARKS
1	5PA–85560–00	BASE ASSY	1	1	1	1		
2	4SS–85550–10	ROTOR ASSY	1	1	1	1		
3	90149–06011	SCREW	2	2	2	2		
4	95317–10600	NUT	1	1	1	1		
5	90201–10591	WASHER, PLATE	1	1	1	1		
6	90464–13077	CLAMP	2	2	2	2		

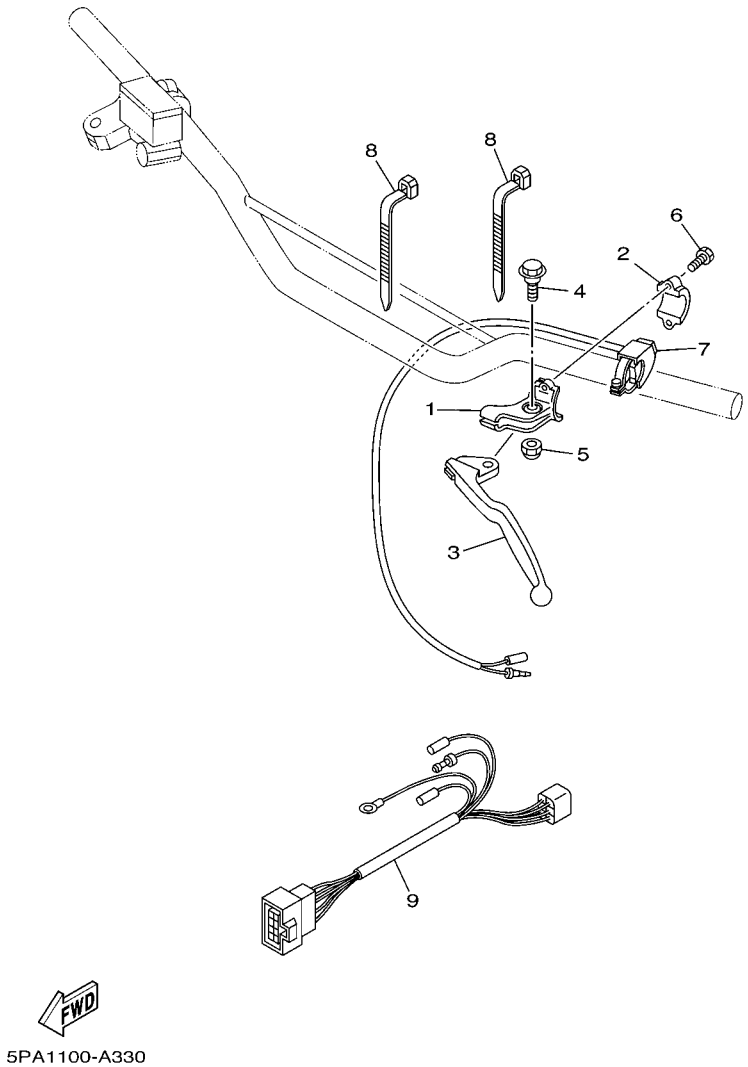

FIG. 33 HANDLE SWITCH & LEVER

REF. NO.	PART NO.	DESCRIPTION	5PA7	5PA9	5SH7	5SH9		REMARKS
1	38V–82911–00	HOLDER, LEVER 1	1	1	1	1		
2	38V–82913–00	HOLDER, LEVER LOWER 1	1	1	1	1		
3	4GY–83912–00	LEVER 1	1	1	1	1		
4	90109–06799	BOLT	1	1	1	1		
5	95607–06100	NUT, U	1	1	1	1		
6	97007–05016	BOLT	2	2	2	2		
7	22W–83976–00	SWITCH, HANDLE 1	1	1	1	1		
8	90464–13077	CLAMP	2	2	2	2		
9	5PA–82509–00	WIRE, SUB LEAD	1	1	1	1		

FIG. 34 ELECTRICAL 1

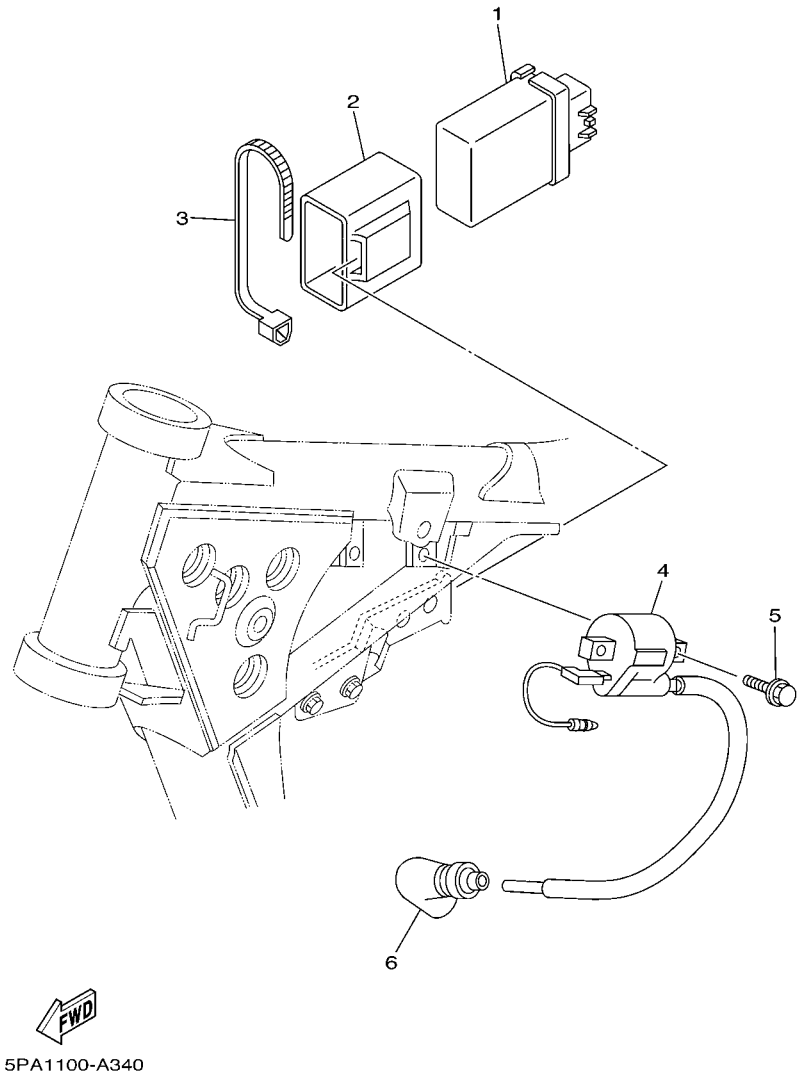

REF. NO.	PART NO.	DESCRIPTION	5PA7	5PA9	5SH7	5SH9		REMARKS
1	5PA–85540–00	C.D.I. UNIT ASSY	1	1	1	1		
2	5PA–85546–00	BAND	1	1	1	1		
3	90460–15126	CLAMP, HOSE	1	1	1	1		
4	5PA–82310–00	IGNITION COIL ASSY	1	1	1	1		
5	95027–06016	BOLT, FLANGE	2	2	2	2		
6	8DG–82370–00	PLUG CAP ASSY	1	1	1	1		

FIG. 35 ALTERNATE FOR CHASSIS

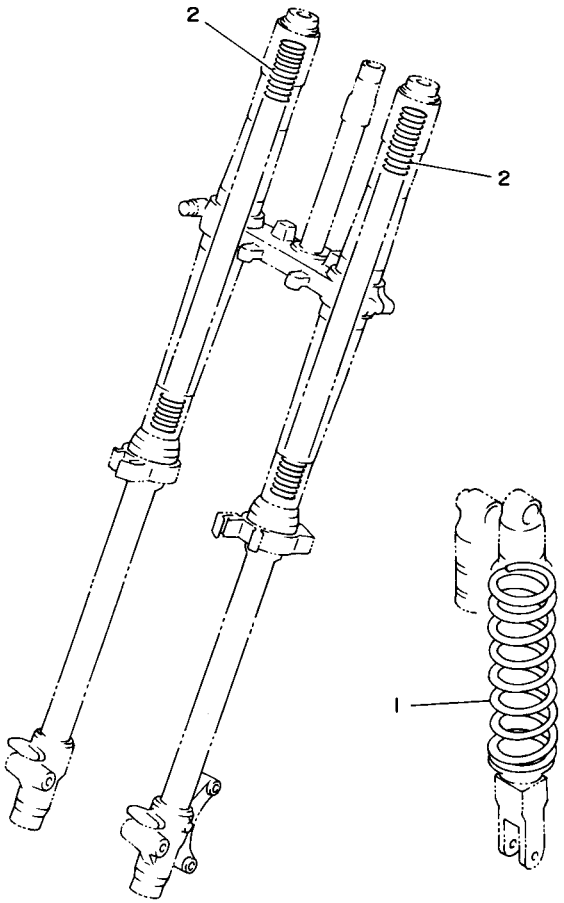

REF. NO.	PART NO.	DESCRIPTION	5PA7	5PA9	5SH7	5SH9		REMARKS
1	4ES–22212–M0	SPRING (K=43N/MM)	1					AP
	4ES–22212–K0	SPRING (K=45N/MM)			1			AP
	4ES–22212–G0	SPRING (K=47N/MM)	1	1				AP
	4ES–22212–F0	SPRING (K=49N/MM)			1	1		AP
	4ES–22212–H0	SPRING (K=51N/MM)	1	1				AP
	4ES–22212–J0	SPRING (K=53N/MM)			1	1		AP
2	4ES–23141–50	SPRING, FRONT FORK(K=2.7N/MM)	2	2				AP
	4ES–23141–40	SPRING, FRONT FORK(K=2.8N/MM)			2	2		AP
	4ES–23141–60	SPRING, FRONT FORK(K=2.9N/MM)	2	2				AP
	4ES–23141–70	SPRING, FRONT FORK(K=3.0N/MM)			2	2		AP

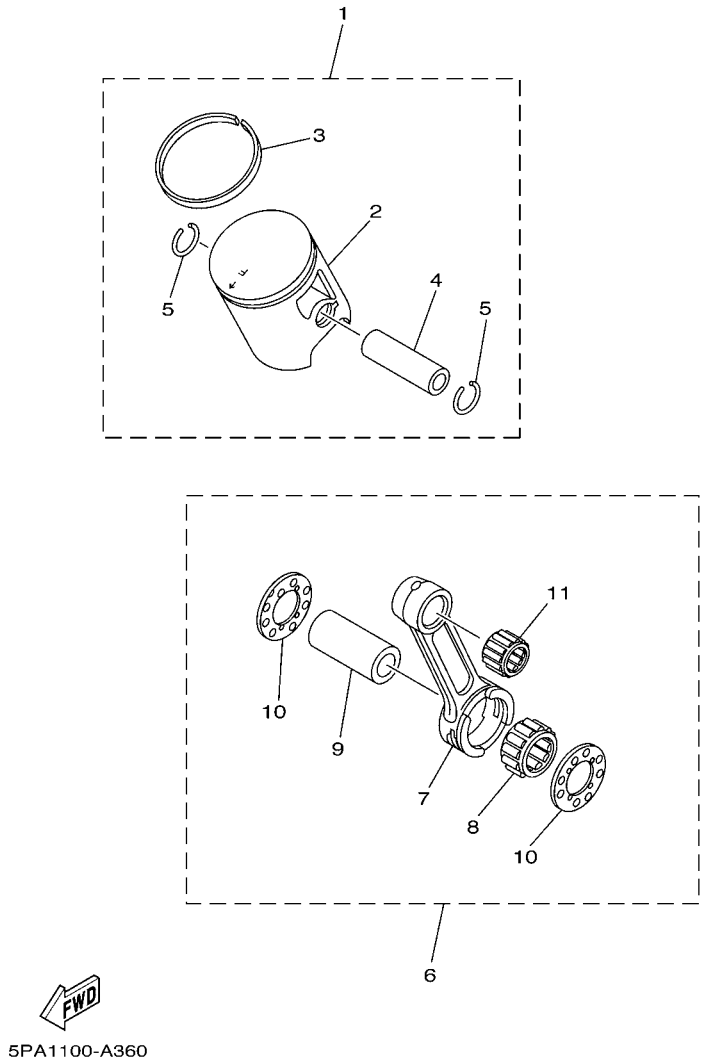

FIG. 36 OPTIONAL PARTS 1

REF. NO.	PART NO.	DESCRIPTION	5PA7	5PA9	5SH7	5SH9		REMARKS
1	5PA–11630–00	PISTON ASSY (STD)	1	1	1	1		
2	5PA–11631–00–B0	.PISTON (STD)	1	1	1	1		ORANGE
3	5PA–11611–00	.RING, PISTON	1	1	1	1		
4	4ES–11633–00	.PIN, PISTON	1	1	1	1		
5	93450–16115	.CIRCLIP	2	2	2	2		
6	4ES–11650–10	CONNECTING ROD ASSY	1	1	1	1		
7	4ES–11651–10	.ROD, CONNECTING	1	1	1	1		
8	93310–420B1	.BEARING	1	1	1	1		
9	2RA–11681–00	.PIN, CRANK 1	1	1	1	1		
10	90209–20159	.WASHER	2	2	2	2		
11	93310–21417	.BEARING	1	1	1	1		

NUMERICAL INDEX

PART NO.	GRID NO.
5PA–11111–00	B – 2
5PA–11311–00	B – 2
4ES–11351–00	B – 2
5PA–11400–00	B – 3
5PA–11412–00	B – 3
5PA–11422–00	B – 3
5PA–11611–00	B – 3
	E – 2
5PA–11630–00	E – 2
5PA–11631–00–A0	B – 3
5PA–11631–00–B0	B – 3
	E – 2
5PA–11631–00–C0	B – 3
5PA–11631–00–D0	B – 3
4ES–11633–00	B – 3
	E – 2
4ES–11650–10	E – 2
4ES–11651–10	B – 3
	E – 2
2RA–11681–00	B – 3
	E – 2
4BA–12422–00	B – 4
4BA–12428–00	B – 4
5PA–12451–00	B – 4
5PA–12459–00	B – 4
5PA–12461–00	B – 5
5HD–12462–00	B – 5
22W–12463–00	B – 5
4ES–12481–10	B – 5
5PA–12482–00	B – 5
353–13115–01	B – 10
5PA–13565–00	B – 6
4ES–13610–00	B – 6
4ES–13613–00	B – 6
4ES–13616–00	B – 6
5PA–14101–00	B – 7
5PA–14105–00	B – 7
5PA–1410E–00	B – 7
4MX–14115–00	B – 7
5PA–14126–00	B – 7
5PA–14131–00	B – 7
3TJ–14137–40	B – 8
5PA–14146–00	B – 8
5PA–14159–00	B – 7
4JT–14171–00	B – 7
5PA–14194–00	B – 8
4XL–14197–10	B – 7
5PA–14340–00	B – 7

PART NO.	GRID NO.
5PA–14392–00	B – 7
5PA–14411–00	B – 6
5PA–14417–00	B – 6
5PA–14451–00	B – 6
5PA–14453–00	B – 6
5PA–14458–00	B – 6
5PA–14459–00	B – 6
4ES–14462–00	B – 6
676–14548–00	B – 7
4MX–14561–00	B – 7
5PA–14610–00	B – 9
17W–14615–00	B – 9
5PA–14642–00	B – 9
4ES–1469A–00	B – 9
5PA–1469A–00	B – 9
5PA–14753–00	B – 9
4ES–14753–20	B – 9
565–14771–00	B – 9
5PA–14916–KE	B – 7
5PA–14916–KF	B – 7
5PA–14916–KG	B – 7
5PA–14916–LE	B – 7
5PA–14916–LF	B – 7
5PA–14916–LG	B – 7
4MX–14919–00	B – 7
5HC–14922–00	B – 8
5HC–14934–00	B – 8
4MX–14943–34	B – 8
4MX–14943–35	B – 8
4MX–14943–36	B – 8
4MX–14943–84	B – 8
4MX–14943–85	B – 8
4MX–14943–86	B – 8
4MX–14943–87	B – 8
4MX–14948–04	B – 7
4MX–14948–05	B – 7
4MX–14948–06	B – 7
5PA–14984–00	B – 7
5PA–14985–00	B – 7
5PA–15111–00	B – 10
5PA–15118–00	B – 10
5PA–15121–10	B – 10
3Y1–15363–00	B – 11
4ES–15411–00	B – 11
5PA–15415–00	B – 11
5PA–15431–00	B – 11
5PA–15451–00	B – 11
4ES–15461–00	B – 11

PART NO.	GRID NO.
5PA–15463–00	B – 11
5PA–15620–00	B – 12
5PA–15621–00	B – 12
5PA–15641–00	B – 12
5PA–15651–00	B – 12
5PA–15660–00	B – 12
4ES–15664–00	B – 12
5PA–16111–00	B – 13
5PA–16150–10	B – 13
5PA–16181–00	B – 13
21V–16321–00	B – 13
4ES–16321–00	B – 13
131–16324–00	B – 13
2TK–16351–00	B – 13
4ES–16356–00	B – 13
5PA–16357–00	B – 13
5PA–16371–10	B – 13
4ES–16381–00	B – 13
4ES–17121–01	B – 14
4ES–17131–02	B – 14
4ES–17151–10	B – 14
4ES–17161–10	B – 14
4ES–17211–01	B – 14
5PA–17221–00	B – 14
4ES–17231–10	B – 14
5PA–17241–00	B – 14
4ES–17251–00	B – 14
5PA–17261–00	B – 14
5PA–17411–00	B – 14
5PA–17421–00	B – 14
164–17427–00–06	B – 14
164–17427–00–08	B – 14
164–17427–00–10	B – 14
5PA–18101–00	C – 3
2HF–18110–01	C – 3
5PA–1811E–00	C – 3
5PA–18140–00	C – 3
4ES–18511–02	C – 2
5R2–18512–00	C – 2
4ES–18513–01	C – 2
4BA–18531–00	C – 2
4BA–18535–00	C – 2
4ES–18540–00	C – 2
5PA–21101–11–P0	C – 4
5PA–21190–00–P0	C – 4
5PA–21274–00	C – 4
4ES–21511–20	C – 5
4XL–2153A–10	C – 14

PART NO.	GRID NO.
4ES–2153E–01	C – 5
5PA–21611–00	C – 5
4ES–21642–00	C – 5
5PA–21711–00	C – 6
5PA–21721–00	C – 6
5PH–2172A–10	C – 6
5PA–21731–00	C – 6
5PA–2173E–10	C – 6
5PA–2173F–10	C – 6
1FK–21746–00	C – 6
5PA–22110–00	C – 7
5SH–22110–10	C – 7
5PA–22128–00	C – 7
4ES–22129–00	C – 7
5PA–22151–00	C – 7
5PA–22176–00	C – 8
30X–22178–00	C – 4
4ES–22178–00	C – 4
5PA–2217A–00	C – 7
4ES–2217F–00	C – 8
4V4–22184–00	C – 4
5PA–22184–00	C – 8
5PA–22199–00	C – 7
5PA–22201–00	C – 9
5PA–22201–10	C – 9
5SH–22201–10	C – 9
5PA–22201–20	C – 9
5SH–22201–20	C – 9
5PA–22201–30	C – 9
5PA–22201–40	C – 9
5PA–22210–00	C – 9
5PA–22210–10	C – 9
5SH–22210–10	C – 9
5PA–22210–20	C – 9
5SH–22210–20	C – 9
5PA–22210–30	C – 9
5PA–22210–40	C – 9
4ES–22212–F0	C – 9
	D – 15
4ES–22212–G0	C – 9
	D – 15
4ES–22212–H0	C – 9
	D – 15
4ES–22212–J0	D – 15
4ES–22212–K0	C – 9
	D – 15
4ES–22212–M0	D – 15
3JD–22214–00	C – 9

PART NO.	GRID NO.
4ES–22214–00	C – 9
4ES–22216–00	C – 9
4ES–22251–00	C – 9
5PA–22253–00	C – 8
5PA–22475–00	C – 8
5PA–23102–00	C – 12
5SH–23102–00	C – 12
5PA–23103–00	C – 12
5SH–23103–00	C – 12
5PA–23110–00	C – 12
4ES–23111–10	C – 12
5PA–23120–00	C – 12
5PA–23125–00	C – 12
3JD–2312G–L0	C – 12
5PA–23136–00	C – 12
4LB–23141–10	C – 12
4ES–23141–40	C – 12
	D – 15
4ES–23141–50	D – 15
4ES–23141–60	D – 15
4ES–23141–70	D – 15
4ES–23142–00	C – 12
4ES–23144–00	C – 12
4ES–23145–00	C – 12
5K5–23149–00	C – 12
5PA–23149–00	C – 12
4ES–2314F–00	C – 13
5PA–2314H–L0	C – 13
5PA–2314J–L0	C – 13
4A1–23156–00	C – 12
2HH–23158–L0	C – 12
5PA–2316A–00	C – 12
5SH–2316A–00	C – 12
5PA–23170–00	C – 12
5PA–23171–00	C – 12
58T–23184–L0	C – 9
4V4–23188–L0	C – 12
4V4–23194–L0	C – 13
4ES–23318–00	C – 14
5PA–2331E–00	C – 13
5PA–23340–01	C – 13
5NY–23346–L0	C – 13
3XJ–23357–L0	C – 12
4DA–23389–00	C – 11
3JD–23394–00	C – 12
4ES–2339E–00	C – 11
1J7–23415–00	C – 11
4ES–23435–00	C – 11

PART NO.	GRID NO.
3SP–23441–00	C – 11
4ES–23485–20	C – 11
5PA–24110–10	C – 15
4EW–2412F–00	C – 15
24X–24144–00	C – 15
5PA–24181–00	C – 15
5PA–24182–00	C – 15
5PA–24240–20	C – 15
5PA–24244–20	C – 6
5PA–24311–00	C – 15
3XJ–24380–00	C – 15
4DP–24500–00	C – 15
4X8–24512–00	C – 15
3AJ–24523–00	C – 15
3AJ–24534–00	C – 15
5NY–24610–00	C – 15
5PA–2470F–00	D – 2
5PA–24718–00	D – 2
5PA–24728–00	D – 2
5PA–24770–10	D – 2
4LB–25104–00	D – 3
4ES–25104–20	D – 3
4ES–25111–00	D – 3
4ES–25181–00	D – 3
22W–25181–01	C – 7
4ES–25183–10	D – 3
1T1–25194–00	D – 3
4LB–25304–00	D – 5
4ES–25304–20	D – 5
4ES–25311–00	D – 5
4ES–25381–01	D – 6
4ES–25383–00	D – 5
4ES–25383–10	D – 6
5PA–25388–00	D – 6
1T2–25394–00	D – 5
5X2–25394–00	D – 5
5PA–25446–00	D – 5
4ES–25447–20	D – 5
5PA–25448–00	D – 5
5PA–25449–00	D – 5
5PA–25451–00	D – 5
5PA–25452–00	D – 5
5PA–25453–00	D – 6
5CG–25715–00	D – 9
5PA–2580T–00	D – 4
5PA–2580W–00	D – 7
3GD–25827–00	D – 7
2VN–2582A–50	D – 11

NUMERICAL INDEX

PART NO.	GRID NO.
5PA–2582T–00	D – 4
5PA–2582W–00	D – 7
5MV–25833–00	D – 9
4ES–2583V–00	D – 11
5MV–25852–01	D – 9
3XP–25852–50	D – 11
5XE–25853–00	D – 9
2VN–25854–00	D – 11
5XE–25854–00	D – 9
2VN–25855–00	D – 11
2VN–25866–00	D – 11
5MV–25867–00	D – 9
5NY–25868–00	D – 9
5SH–25872–00	D – 9
4ES–25872–10	D – 9
5PA–25873–00	D – 11
5SH–25873–00	D – 11
2VM–25876–00	D – 11
4EW–25894–00	D – 11
4ES–25895–00	D – 11
5MV–2589F–00	D – 9
4X8–25913–00	D – 4
34X–25914–00	D – 4
1UY–25917–51	D – 7
56A–25919–00	D – 4
56A–25919–10	D – 4
1UY–25919–51	D – 7
4ES–25920–00	D – 7
56A–25926–00	D – 4
3GD–25933–00	D – 7
56A–25937–00	D – 4
5R2–25937–00	D – 4
1UY–25937–51	D – 7
5PA–26111–00	D – 8
4GY–26241–00	D – 8
4GY–26242–00	D – 8
22W–26243–00	D – 8
5X2–26281–00	D – 8
322–26282–00	D – 8
5X2–2628H–01	D – 8
5PA–26311–00	D – 8
4ES–26335–11	D – 8
498–26372–00	D – 8
5NY–26372–00	D – 9
4ES–27114–00	D – 7
5PA–27211–00	D – 10
2YK–27222–00	D – 11
4ES–27311–00	D – 10
4LB–27311–00	D – 10
5ET–27411–00	D – 10
5ET–27421–00	D – 10
4ES–27491–00	D – 7
5PA–82310–00	D – 14
8DG–82370–00	D – 14
5PA–82509–00	D – 13
38V–82911–00	D – 13
38V–82913–00	D – 13
4GY–83912–00	D – 13
5MV–83922–00	D – 9
22W–83976–00	D – 13
5PA–85540–00	D – 14
5PA–85546–00	D – 14
4SS–85550–10	D – 12
5PA–85560–00	D – 12
5NY–W0041–00	D – 9
1FK–W0042–50	D – 11
5PA–W0045–00	D – 4
5PA–W0046–50	D – 7
4ES–W0047–00	D – 7
4ES–W0047–10	D – 4
51L–W0048–00	D – 4
1UY–W0048–50	D – 7
4ES–W0057–10	D – 4
4EW–W0057–50	D – 7
5XE–W2587–00	D – 9
90101–08475	D – 6
90101–12755	C – 8
90105–08050	B – 10
90105–08211	D – 4
90105–10052	C – 4
90105–10582	C – 7
90105–10614	C – 9
90105–10731	C – 4
90105–12382	C – 8
90109–065F3	B – 6
90109–06799	D – 13
90109–081G2	D – 6
90109–08718	D – 7
90109–10729	C – 9
90110–08096	C – 4
	D – 7
90116–08318	B – 2
90116–08388	B – 2
90116–08394	B – 2
90119–05001	B – 13
90119–06001	B – 9
90119–06001	C – 6
90119–06038	B – 5
90119–06063	C – 5
90119–06118	C – 4
90119–06185	C – 5
90119–06190	C – 15
90119–06192	C – 5
90119–06225	C – 6
90122–06002	B – 6
90123–08046	D – 8
90149–06011	C – 15
	D – 12
90149–06327	D – 4
	D – 7
90152–06010	B – 12
90157–05079	C – 11
90157–06071	B – 14
90159–06078	C – 6
90159–06182	C – 6
90176–08026	B – 2
90179–08148	D – 8
90179–08299	B – 2
90179–12659	B – 13
90179–16226	B – 15
90179–22412	C – 11
90179–25033	C – 11
90183–06023	C – 5
90185–08169	D – 6
90185–10110	C – 9
90185–12046	D – 3
90185–12119	C – 8
90185–14142	D – 6
90201–043H7	B – 6
90201–06050	B – 9
90201–06060	B – 12
	B – 14
90201–060A3	B – 9
90201–08083	D – 11
90201–080L8	B – 2
90201–081R9	C – 4
90201–08512	B – 4
90201–086P8	D – 6
90201–10118	D – 9
	D – 11
90201–10119	D – 10
90201–10591	D – 12
90201–112U6	C – 10
90201–12362	D – 3
90201–124F8	B – 12
90201–124G9	C – 7
90201–12749	C – 8
90201–127J6	C – 8
90201–152L7	D – 6
90201–15700	D – 10
90201–171G6	B – 13
90201–17545	B – 14
90201–17558	B – 13
90201–176L4	B – 12
90201–177G4	C – 3
90201–20611	B – 14
90201–220T0	C – 11
90201–256K5	C – 11
90201–33299	B – 9
90202–05193	C – 15
90208–12015	B – 13
90209–06096	B – 6
90209–06187	C – 5
90209–14008	B – 14
90209–16209	B – 14
90209–20159	B – 3
	E – 2
90215–20261	B – 15
90240–08124	D – 11
90240–10142	D – 10
90250–06013	C – 2
90267–48138	B – 6
90280–03017	B – 3
90282–05001	B – 13
90336–06031	B – 12
90338–10150	C – 8
90380–10218	C – 7
90380–12219	C – 8
90381–12091	C – 8
90385–17042	C – 7
90387–06027	C – 15
90387–060A3	C – 4
90387–0614M	B – 5
90387–062X0	C – 7
90387–063G3	B – 9
90387–064X4	C – 5
90387–0701A	C – 5
90387–105L0	B – 9
90387–1200U	C – 7
90387–124H0	D – 3
90387–127J7	C – 7
90387–127J8	C – 7
90387–202A0	B – 15
90387–20488	B – 13
90387–227H7	D – 8
90401–10168	D – 9
	D – 11
90430–06166	B – 4
90430–08119	B – 11
90445–08376	B – 10
90445–09220	C – 15
90445–09300	C – 15
90450–25037	B – 5
90450–28014	B – 5
90450–99064	B – 6
90460–15126	D – 14
90460–41191	B – 6
90460–56105	B – 6
90461–10136	B – 10
90464–13077	B – 5
	D – 12
	D – 13
90465–13275	C – 15
90467–08002	B – 5
90467–09002	C – 15
90467–10008	C – 15
90467–11044	D – 11
90468–23194	B – 12
90480–15528	B – 5
90480–16561	B – 9
90480–18411	B – 9
90480–18549	C – 15
90501–12081	B – 12
90501–20735	B – 13
90506–15480	D – 10
90507–20052	B – 9
90508–14016	B – 13
90508–24007	C – 3
90508–26750	B – 12
90508–282B8	D – 10
90508–282B9	D – 10
90508–32016	C – 3
91401–16012	D – 11
91401–20025	D – 10
91401–25015	D – 10
92017–06010	B – 9
92017–06040	C – 7
92903–04600	B – 7
92907–03100	B – 6
92907–10600	C – 9
93101–12173	C – 3
93101–17062	C – 8
93102–12106	B – 4
93102–12224	B – 13
93102–17263	B – 12
93102–20009	D – 5
93102–20447	B – 3
93102–26042	B – 15
93102–28009	B – 3
93106–20031	D – 3
93109–11073	B – 4
93109–17071	C – 7
93210–11073	D – 10
93210–12152	B – 12
93210–15620	D – 11
93210–19123	B – 11
93210–56459	B – 2
93210–84724	B – 2
93306–00105	B – 4
93306–00203	D – 5
93306–20120	D – 3
93306–20203	D – 5
93306–20333	B – 14
93306–20401	B – 15
93306–20438	B – 3
93306–30421	B – 3
93310–21417	B – 3
	E – 2
93310–420B1	B – 3
	E – 2
93315–11206	B – 13
93315–21455	C – 7
93315–31502	B – 14
93317–11245	B – 14
93317–21746	C – 7
93317–31771	C – 7
93332–00079	C – 11
93410–20038	B – 14
93440–07182	B – 4
93440–15012	B – 14
93440–17064	B – 14
93450–16115	B – 3
	E – 2
93503–16003	B – 13
93507–32009	B – 12
9382A–14227	B – 15
9382A–15228	B – 15
94107–17009	D – 3

PART NO.	GRID NO.
94107–17011	D – 3
94107–19009	D – 3
94107–19011	D – 3
94109–14009	D – 5
94109–14011	D – 5
94109–16009	D – 5
94109–16011	D – 5
94207–17284	D – 3
94207–19290	D – 3
94208–14285	D – 5
94209–16291	D – 5
94307–16171	D – 5
94307–17166	D – 3
94307–19170	D – 3
94308–14165	D – 5
94414–17530	D – 3
94414–19521	D – 3
94416–14529	D – 5
94418–16522	D – 5
94682–00001	D – 6
94702–00368	B – 2
94709–00368	B – 2
95024–06010	C – 13
95027–06012	B – 12
	C – 4
	C – 11
	D – 2
	D – 7
	D – 11
95027–06014	C – 7
95027–06016	C – 14
	C – 15
	D – 11
	D – 14
95027–06020	B – 6
95027–06025	B – 4
	B – 9
	B – 11
95027–06030	B – 11
95027–06035	B – 11
95027–06040	B – 11
95027–08012	C – 4
95027–08030	C – 11
95027–08050	C – 7
95027–08080	B – 11
95307–08600	D – 11
95307–08700	D – 6
95317–10600	D – 12

PART NO.	GRID NO.
95607–06100	D – 13
95607–06200	C – 7
95607–08200	C – 7
95607–10200	C – 4
	C – 7
95607–12200	C – 8
95617–12100	C – 7
95701–06500	D – 9
95807–08035	C – 11
95817–08125	C – 4
95827–06010	B – 5
95827–06060	B – 4
97007–05016	D – 13
97027–06020	C – 3
97801–03008	C – 15
98504–04012	B – 8
98504–04014	B – 7
98507–03008	B – 6
98507–05010	D – 11
98507–05016	D – 8
98507–06030	B – 11
98507–06040	B – 10
98507–06050	B – 10
98507–06060	B – 10
98507–06070	B – 10
98706–04012	D – 9
98707–04012	D – 8
98707–06025	C – 15
99009–10400	C – 2
99009–12400	B – 12
99009–17400	C – 3
99009–35500	D – 5
99244–00140	C – 8
99530–08016	B – 11
99530–10014	B – 10
	B – 11
99590–10114	B – 2
9Y582–00117	D – 6
9Y582–00123	D – 6

PART NO.	GRID NO.

PART NO.	GRID NO.

PART NO.	GRID NO.

PART NO.	GRID NO.