YAMAHA

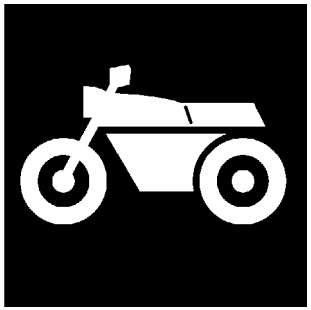

PARTS CATALOGUE

YZ250FA (17DD) CANADA
YZ250F (17DE) EUROPE
YZ250F (17DF) JAPAN
YZ250FA (17DG) OCEANIA, SOUTH AFRICA

1K17D-100E1

( )

YAMAHA GENUINE Parts & Accessories

2010-10-12

NEWS No.	DATE	COMMENT
PE0-MC-100026	Sep.,27,2010	MOD: FIG.4: CAMSHAFT & CHAIN LIST/ILLUSTRATION REVISION

YZ250FA/YZ250F
PARTS CATALOGUE
©2010 by Yamaha Motor Co., Ltd.
1st edition, June 2010
All rights reserved.
Any reprinting or unauthorized use
without the written permission of
Yamaha Motor Co., Ltd.
is expressly prohibited.
Printed in Japan.

FOREWORD

This Parts Catalogue is related to the parts for the model(s) on the cover page. When you are ordering replacement parts, please refer to this Parts Catalogue and quote both part numbers and part names correctly.

1. Modifications or additions which have been made after the issue of the Parts Catalogue will be announced in the Parts News.
   It is advisable that you make the necessary corrections to the Parts Catalogue according to the Parts News.

2. Abbreviations
   The following abbreviations are used in this Parts Catalogue.

   “UR” Use specified parts number.
   “UN” Use as many as needed.
   “AP” Alternate Parts
   “LM” Locally Made (Parts need to be ordered locally)
   “F#” Frame No. (Applicable machine No.)
   “O/S” Over Size

3. The number of components for assembly
   - Parts, which are to be supplied in an assembly, are listed with a dot (.) in front of the part name as shown below.
   - The numeral appearing to the right of each component part indicates the quantity of parts for each assembly unit.

PART NO.	DESCRIPTION	Q’TY	REMARKS
2F5–83310–60	FRONT FLASHER LIGHT ASSY	2	
115–83311–60	.BULB (6V–18W)	1	

4. Applicable colours of graphics are represented in the “REMARKS” as shown below.

PART NO.	DESCRIPTION	Q’TY	REMARKS
2N4–24110–00–X5	FUEL TANK COMP.	2	MXR
3J1–24240–10	.GRAPHIC, FUEL TANK	1	FOR MXR

5. Note that the illustrations for reference in finding parts numbers are not to be used for assembling. When assembling, please use the applicable service manual.

6. The asterisk (*) before a reference number indicates modified items after the first edition.

7. Applicable Serial No.

Engine Serial No.

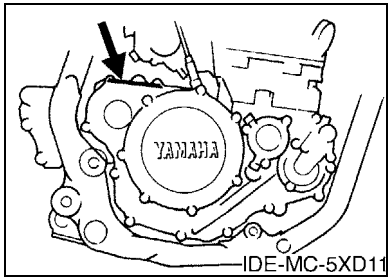

Frame Serial No.

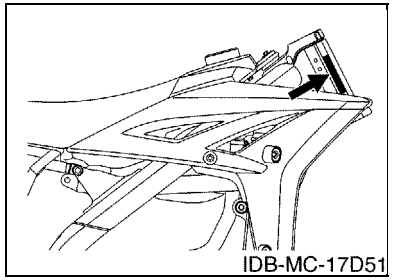

8. Applicable Colour Code (The (*) mark shows Model colour.)

Abbreviation	Colour Name	Colour Code
DPBSE(*)	DEEP PURPLISH BLUE SOLID E	0583
YB(*)	YAMAHA BLACK	0033

MODEL LABEL

(1) A label called “Model Label” is affixed in the location as indicated in (3) below. When using this parts catalogue, please be sure to cross–reference the “model code – production code No.” in the catalogue with the “model code – production code No.” indicated on the Model Label affixed onto the product concerned.

(2) “Model Label” Indication

a b ○ xxxx – xxx ● x c	a: Model Type Code b: Production Code No. c: Colouring Type

○ 4TW1–010 ● A

(3) Model Label Affixing Location

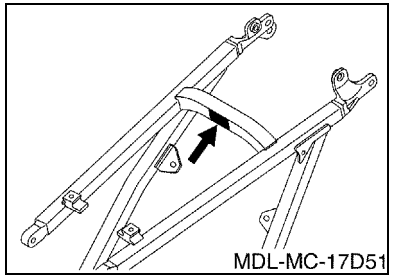

(4) Colouring Information

Model Code	Colouring Type Code	Colour Code	Colour Name	Abbreviation
17DD	A	0583	DEEP PURPLISH BLUE SOLID E	DPBSE
	B	0033	YAMAHA BLACK	YB
17DE	A	0583	DEEP PURPLISH BLUE SOLID E	DPBSE
	B	0033	YAMAHA BLACK	YB
17DF	A	0583	DEEP PURPLISH BLUE SOLID E	DPBSE
	B	0033	YAMAHA BLACK	YB
17DG	A	0583	DEEP PURPLISH BLUE SOLID E	DPBSE
	B	0033	YAMAHA BLACK	YB

(5) Model Code – Production Code Number of Model Listed in This Parts Catalogue

Model Code	Production Code No.	Country (destination)
17DD	020	CANADA
17DE	010	BELGIUM
		FINLAND
		FRANCE
		GERMANY
		GREECE
		IRELAND
		ITALY
		POLAND
		PORTUGAL
		SLOVENIA
		SPAIN
		SWEDEN
		UNITED KINGDOM
17DF	010	JAPAN
17DG	010	AUSTRALIA
		NEW ZEALAND
		SOUTH AFRICA

Model Code	Production Code No.	Country (destination)

CONTENTS

ENGINE

CYLINDER 1
CRANKSHAFT & PISTON 3
VALVE 4
CAMSHAFT & CHAIN 6
WATER PUMP 7
RADIATOR & HOSE 8
OIL PUMP 9
OIL CLEANER 11
INTAKE 12
CARBURETOR 13
EXHAUST 18
CRANKCASE 19
CRANKCASE COVER 1 20
STARTER 22
CLUTCH 23
TRANSMISSION 24
SHIFT CAM & FORK 26
SHIFT SHAFT 27

CHASSIS

FRAME 28
FENDER 30
SIDE COVER & OIL TANK 31
REAR ARM 33
REAR SUSPENSION 35
STEERING 37
FRONT FORK 38
FUEL TANK 41
SEAT 43
FRONT WHEEL 44
FRONT BRAKE CALIPER 45
REAR WHEEL 46
REAR BRAKE CALIPER 48
STEERING HANDLE & CABLE 49
FRONT MASTER CYLINDER 50
STAND & FOOTREST 51
REAR MASTER CYLINDER 52
GENERATOR 53
HANDLE SWITCH & LEVER 54
ELECTRICAL 1 55
ALTERNATE FOR CHASSIS 56

INDEX

NUMERICAL INDEX 57

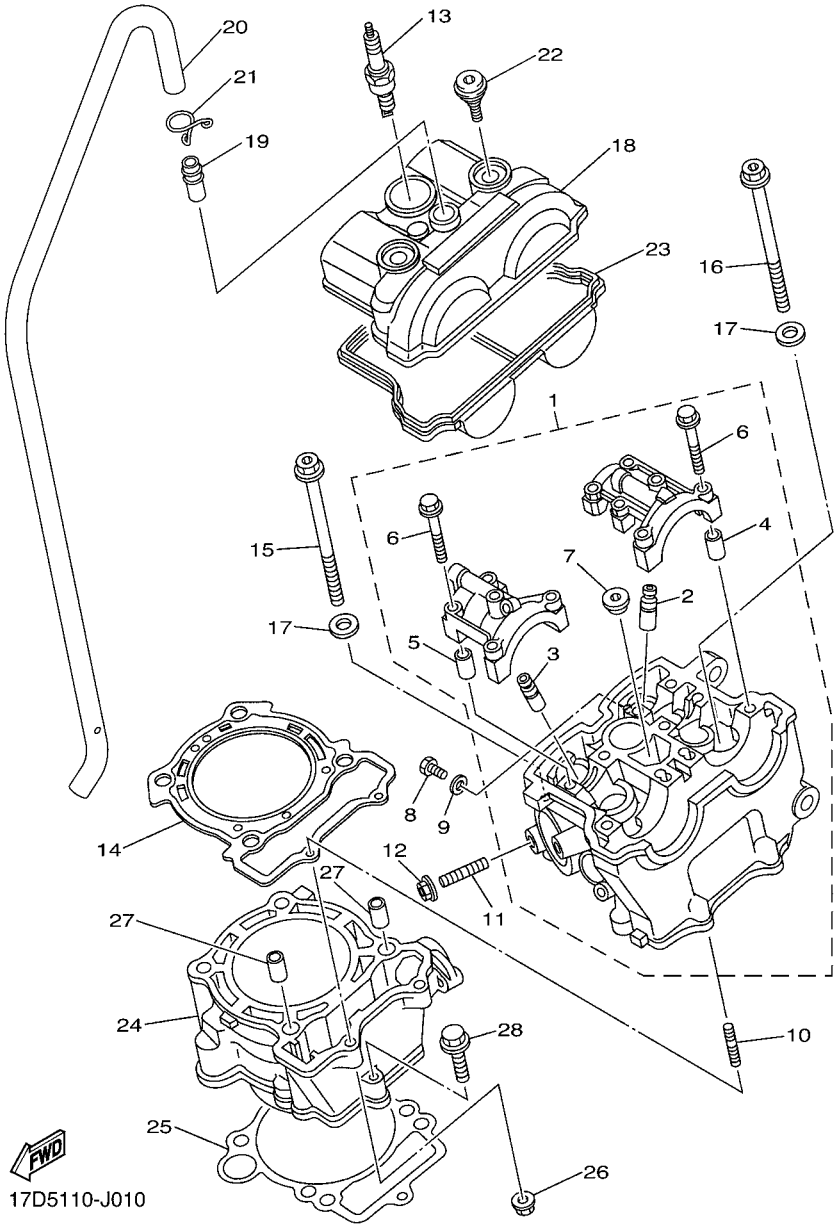

FIG. 1 CYLINDER

REF. NO.	PART NO.	DESCRIPTION	17DD	17DE	17DF	17DG		REMARKS
1	17D–11102–10	CYLINDER HEAD ASSY	1	1	1	1		
2	5NL–11133–10	.GUIDE, VALVE 1	3	3	3	3		
3	5NL–11134–10	.GUIDE, VALVE 2	2	2	2	2		
4	91808–16023	.PIN, DOWEL	2	2	2	2		
5	91808–16023	.PIN, DOWEL	2	2	2	2		
6	90105–06027	.BOLT, FLANGE	10	10	10	10		
7	90340–12007	.PLUG, STRAIGHT SCREW	1	1	1	1		
8	95022–06010	BOLT, FLANGE	1	1	1	1		
9	90430–06014	GASKET	1	1	1	1		
10	90116–06038	BOLT, STUD	2	2	2	2		
11	95612–08620	BOLT, STUD	2	2	2	2		
12	95702–08500	NUT, FLANGE	2	2	2	2		
13	94701–00411	PLUG, SPARK (NGK R CR8E)	1	1		1		STD
	94703–00411	PLUG, SPARK (NGK R CR8E)			1			STD
	94701–00410	PLUG, SPARK (NGK R CR9E)	1	1		1		AP
	94703–00410	PLUG, SPARK (NGK R CR9E)			1			AP
14	5NL–11181–00	GASKET, CYLINDER HEAD 1	1	1	1	1		
15	90105–09004	BOLT, FLANGE	2	2	2	2		
16	90105–09002	BOLT, FLANGE	2	2	2	2		
17	90201–096J9	WASHER, PLATE	4	4	4	4		
18	5NL–11191–50	COVER, CYLINDER HEAD 1	1	1	1	1		
19	371–11167–01	PIPE, BREATHER 2	1	1	1	1		
20	5XC–11166–00	PIPE, BREATHER 1	1	1	1	1		
21	90467–140A4	CLIP	1	1	1	1		
22	5UM–1119E–00	BOLT, COVER HEAD	2	2	2	2		
23	5NL–11193–00	GASKET, HEAD COVER 1	1	1	1	1		
24	5XC–11311–10	CYLINDER 1	1	1	1	1		

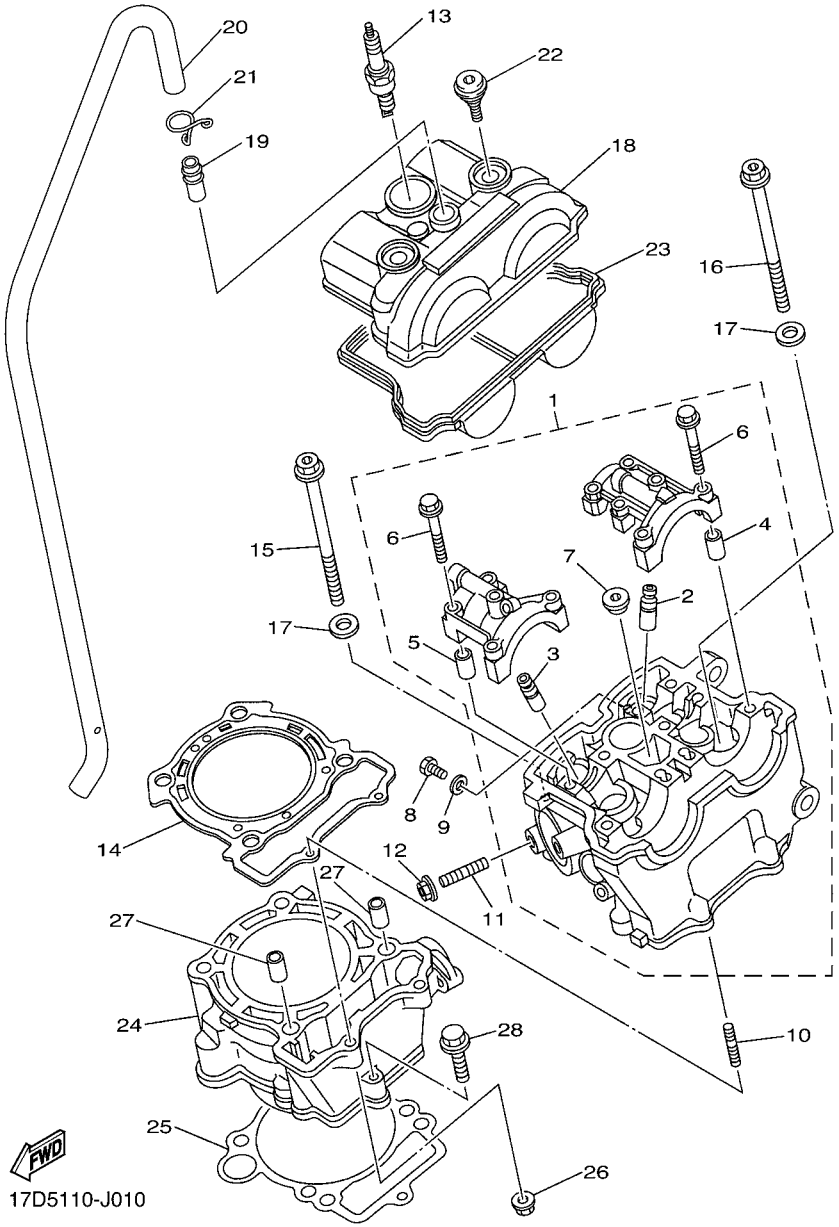

FIG. 1 CYLINDER

REF. NO.	PART NO.	DESCRIPTION	17DD	17DE	17DF	17DG		REMARKS
25	5NL–11351–00	GASKET, CYLINDER	1	1	1	1		
26	95702–06500	NUT, FLANGE	2	2	2	2		
27	93612–16254	PIN, DOWEL	2	2	2	2		
28	95022–06035	BOLT, FLANGE	1	1	1	1		

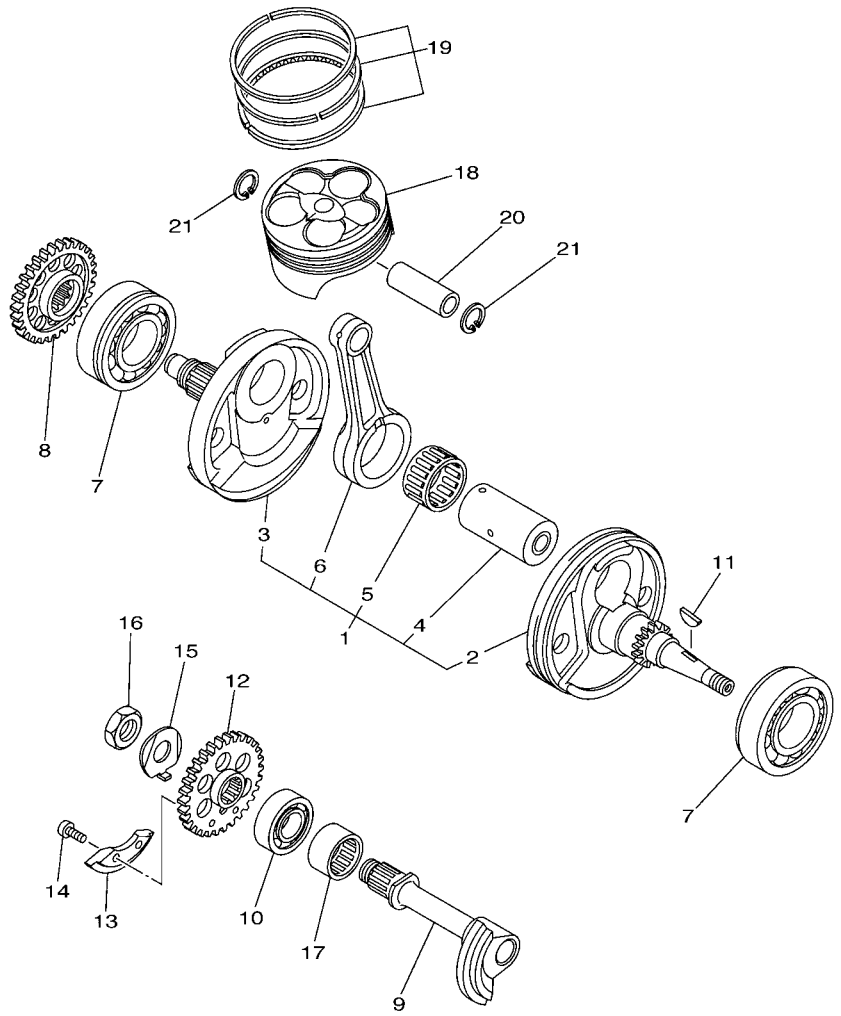

5XCL100-G020

FIG. 2 CRANKSHAFT & PISTON

REF. NO.	PART NO.	DESCRIPTION	17DD	17DE	17DF	17DG		REMARKS
1	5XC–11400–21	CRANKSHAFT ASSY	1	1	1	1		
2	5UL–11412–20	.CRANK 1	1	1	1	1		
3	5UL–11422–10	.CRANK 2	1	1	1	1		
4	5XC–11681–01	.PIN, CRANK 1	1	1	1	1		
5	93310–63238	.BEARING	1	1	1	1		
6	5XC–11651–00	.ROD, CONNECTING	1	1	1	1		
7	93306–20648	BEARING	2	2	2	2		
8	5NL–11536–10	GEAR, DRIVE	1	1	1	1		
9	5NL–11455–00	SHAFT 1	1	1	1	1		
10	93306–20335	BEARING	1	1	1	1		
11	90280–03006	KEY, WOODRUFF	1	1	1	1		
12	5NL–11531–00	GEAR, BALANCE WEIGHT	1	1	1	1		
13	5NL–11454–00	WEIGHT 1	1	1	1	1		
14	90149–06084	SCREW	2	2	2	2		
15	90215–14204	WASHER, LOCK	1	1	1	1		
16	90170–14171	NUT	1	1	1	1		
17	93311–32261	BEARING	1	1	1	1		
18	5XC–11631–00	PISTON (STD)	1	1	1	1		
19	5NL–11603–00	PISTON RING SET (STD)	1	1	1	1		
20	5NL–11633–00	PIN, PISTON	1	1	1	1		
21	93420–16086	CIRCLIP	2	2	2	2		

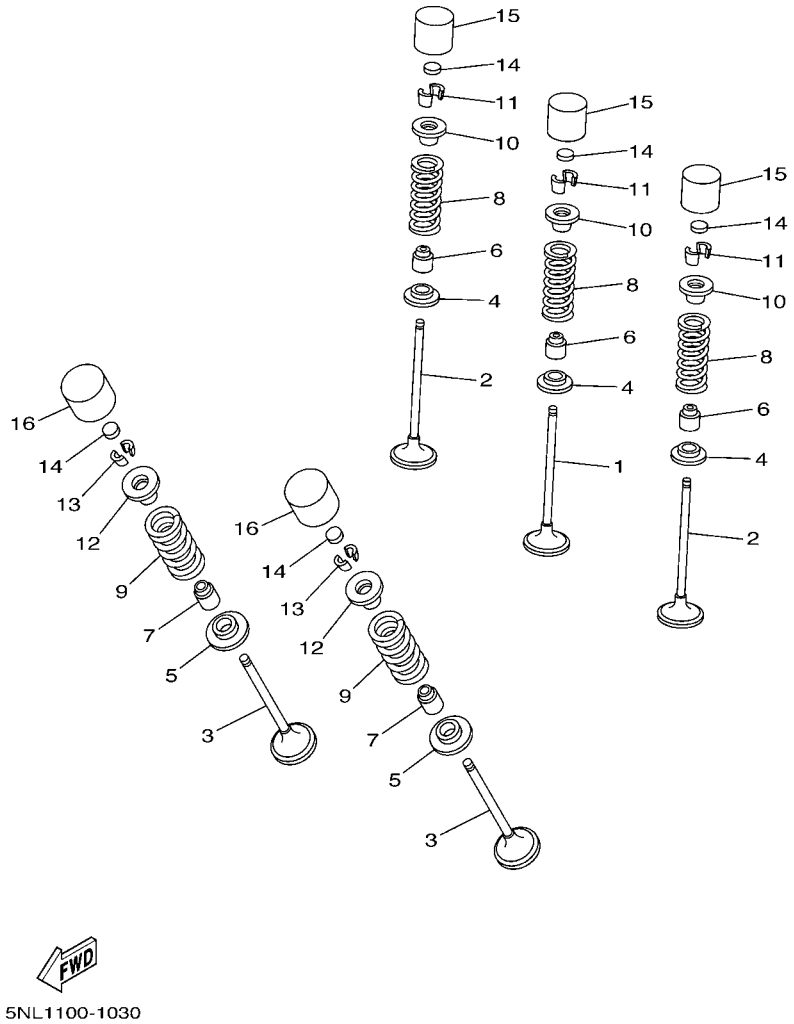

FIG. 3 VALVE

REF. NO.	PART NO.	DESCRIPTION	17DD	17DE	17DF	17DG		REMARKS
1	5NL–12111–30	VALVE, INTAKE	1	1	1	1		
2	5NL–12112–30	VALVE, INTAKE 2	2	2	2	2		
3	5NL–12121–10	VALVE, EXHAUST	2	2	2	2		
4	5NL–12116–00	SEAT, VALVE SPRING	3	3	3	3		
5	3GM–12126–00	SEAT, VALVE SPRING 2	2	2	2	2		
6	4TV–12119–00	SEAL, VALVE STEM	3	3	3	3		
7	4SV–12119–00	SEAL, VALVE STEM	2	2	2	2		
8	5NL–12113–10	SPRING, VALVE INNER	3	3	3	3		
9	5NL–12114–10	SPRING, VALVE OUTER	2	2	2	2		
10	5VY–12117–00	RETAINER, VALVE SPRING	3	3	3	3		
11	1HX–12118–00	COTTER, VALVE	6	6	6	6		
12	5VY–12127–00	RETAINER, VALVE SPRING	2	2	2	2		
13	1WG–12118–00	COTTER, VALVE	4	4	4	4		
14	1HX–12168–00	PAD, ADJUSTING 2 (1.20)	5	5	5	5		UR
	1HX–12168–20	PAD, ADJUSTING 2 (1.25)	5	5	5	5		UR
	1HX–12168–40	PAD, ADJUSTING 2 (1.30)	5	5	5	5		UR
	1HX–12168–60	PAD, ADJUSTING 2 (1.35)	5	5	5	5		UR
	1HX–12168–80	PAD, ADJUSTING 2 (1.40)	5	5	5	5		UR
	1HX–12168–A0	PAD, ADJUSTING 2 (1.45)	5	5	5	5		UR
	1HX–12168–F0	PAD, ADJUSTING 2 (1.50)	5	5	5	5		UR
	1HX–12168–H1	PAD, ADJUSTING 2 (1.55)	5	5	5	5		UR
	1HX–12168–K1	PAD, ADJUSTING 2 (1.60)	5	5	5	5		UR
	1HX–12168–M1	PAD, ADJUSTING 2 (1.65)	5	5	5	5		UR
	1HX–12168–R1	PAD, ADJUSTING 2 (1.70)	5	5	5	5		UR
	1HX–12168–U1	PAD, ADJUSTING 2 (1.75)	5	5	5	5		UR
	1HX–12168–W1	PAD, ADJUSTING 2 (1.80)	5	5	5	5		UR
	1HX–12168–Y1	PAD, ADJUSTING 2 (1.85)	5	5	5	5		UR

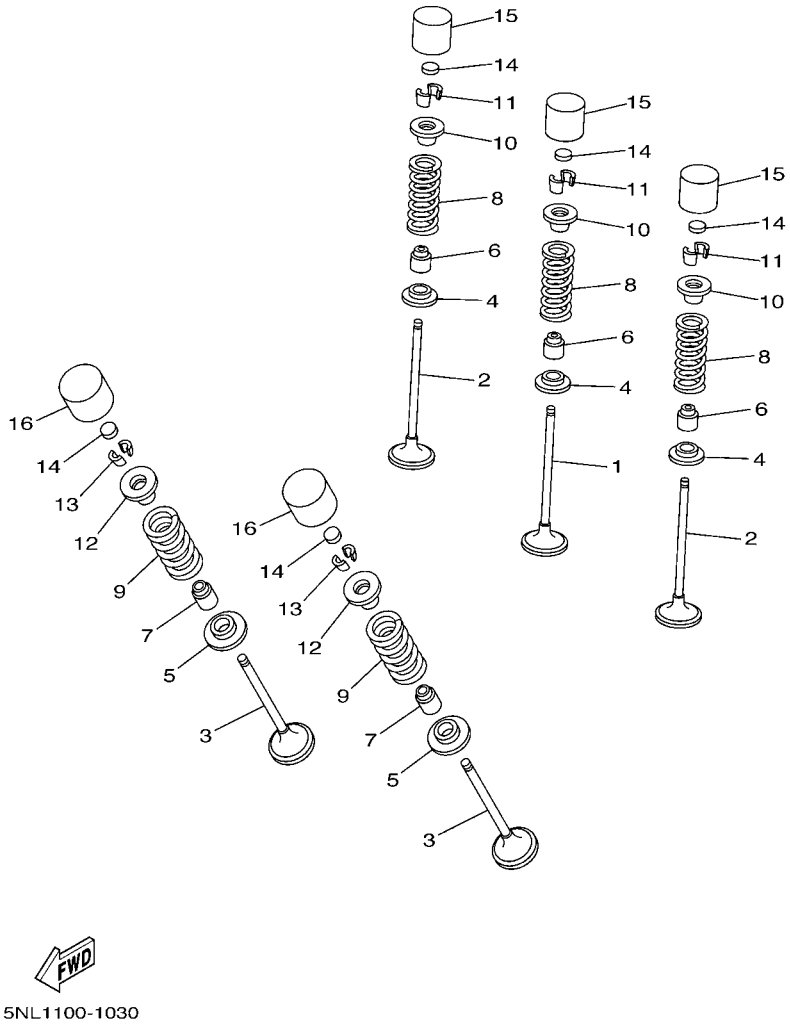

FIG. 3 VALVE

REF. NO.	PART NO.	DESCRIPTION	17DD	17DE	17DF	17DG		REMARKS
14	1HX–12169–11	PAD, ADJUSTING 2 (1.90)	5	5	5	5		UR
	1HX–12169–31	PAD, ADJUSTING 2 (1.95)	5	5	5	5		UR
	1HX–12169–50	PAD, ADJUSTING 2 (2.00)	5	5	5	5		UR
	1HX–12169–70	PAD, ADJUSTING 2 (2.05)	5	5	5	5		UR
	1HX–12169–90	PAD, ADJUSTING 2 (2.10)	5	5	5	5		UR
	1HX–12169–E0	PAD, ADJUSTING 2 (2.15)	5	5	5	5		UR
	1HX–12169–G0	PAD, ADJUSTING 2 (2.20)	5	5	5	5		UR
	1HX–12169–J0	PAD, ADJUSTING 2 (2.25)	5	5	5	5		UR
	1HX–12169–L0	PAD, ADJUSTING 2 (2.30)	5	5	5	5		UR
	1HX–12169–N0	PAD, ADJUSTING 2 (2.35)	5	5	5	5		UR
	1HX–12169–T0	PAD, ADJUSTING 2 (2.40)	5	5	5	5		UR
15	3LN–12153–10	LIFTER, VALVE	3	3	3	3		YELLOW
16	3FV–12153–10	LIFTER, VALVE	2	2	2	2		YELLOW

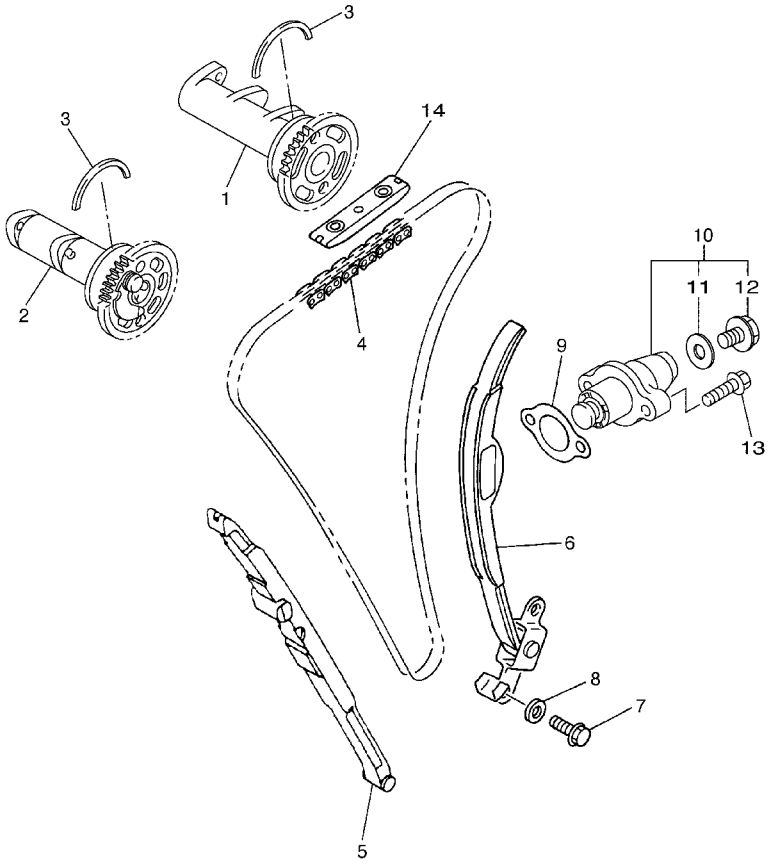

5XC9100-E041

FIG. 4 CAMSHAFT & CHAIN

REF. NO.	PART NO.	DESCRIPTION	17DD	17DE	17DF	17DG		REMARKS
1	17D–12170–10	CAMSHAFT ASSY 1	1	1	1	1		
2	17D–12180–10	CAMSHAFT ASSY 2	1	1	1	1		
3	93440–41178	CIRCLIP	2	2	2	2		
4	94591–53114	CHAIN	1	1	1	1		
5	5NL–12251–30	DAMPER, CHAIN 1	1	1	1	1		
6	5NL–12252–00	DAMPER, CHAIN 2	1	1	1	1		
7	97022–06016	BOLT	2	2	2	2		
8	92902–06600	WASHER, PLATE	2	2	2	2		
9	4FM–12213–00	GASKET, TENSIONER CASE	1	1	1	1		
10	5TA–12210–20	TENSIONER ASSY, CAM CHAIN	1	1	1	1		
11	5EL–12214–00	.GASKET	1	1	1	1		
12	5EL–12228–00	.BOLT, FLANGE	1	1	1	1		
13	95022–06025	BOLT, FLANGE	2	2	2	2		
14	5BE–12241–00	GUIDE, STOPPER 2	1	1	1	1		

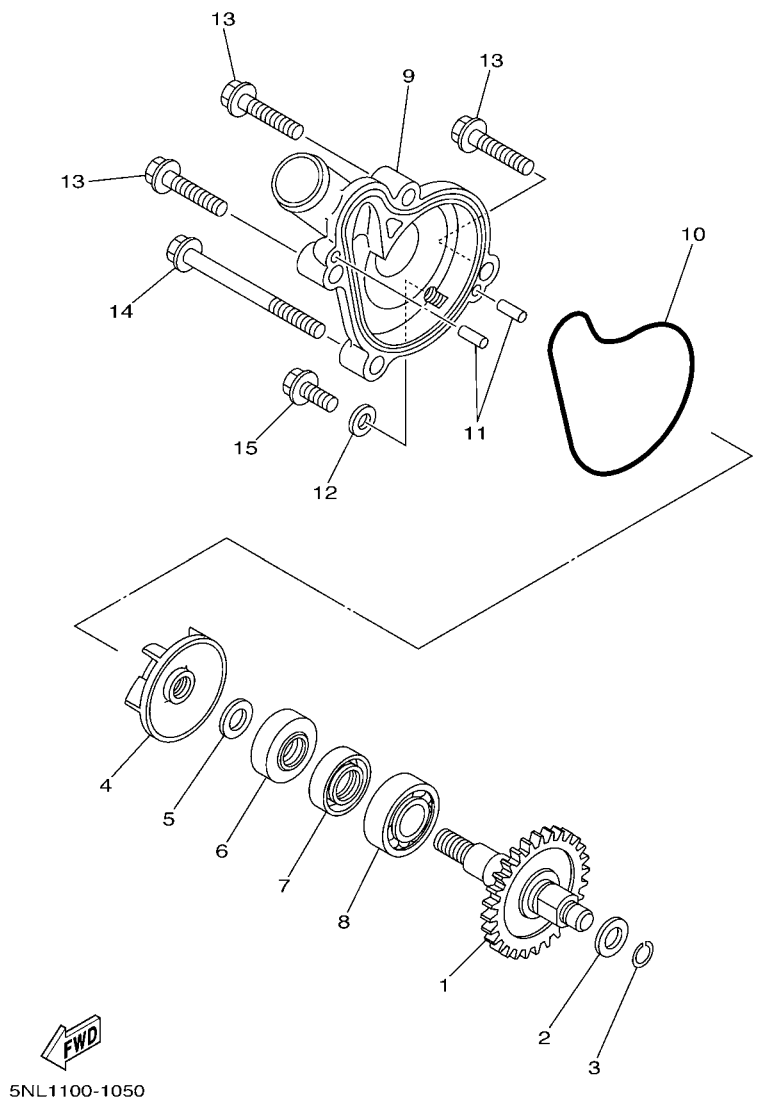

FIG. 5 WATER PUMP

REF. NO.	PART NO.	DESCRIPTION	17DD	17DE	17DF	17DG		REMARKS
1	5XC–12459–00	GEAR, IMPELLER SHAFT	1	1	1	1		
2	90201–08512	WASHER, PLATE	1	1	1	1		
3	93440–07182	CIRCLIP	1	1	1	1		
4	5DH–12451–00	IMPELLER, WATER PUMP	1	1	1	1		
5	90201–08512	WASHER, PLATE	1	1	1	1		
6	93109–11073	OIL SEAL	1	1	1	1		
7	93102–12106	OIL SEAL (SD 12-22-5 HS)	1	1	1	1		
8	93306–00105	BEARING	1	1	1	1		
9	5NL–12422–20	COVER, HOUSING	1	1	1	1		
10	5NL–12439–00	O-RING	1	1	1	1		
11	93604–10011	PIN, DOWEL	2	2	2	2		
12	90430–06014	GASKET	1	1	1	1		
13	95022–06025	BOLT, FLANGE	3	3	3	3		
14	95022–06065	BOLT, FLANGE	1	1	1	1		
15	95022–06012	BOLT, FLANGE	1	1	1	1		

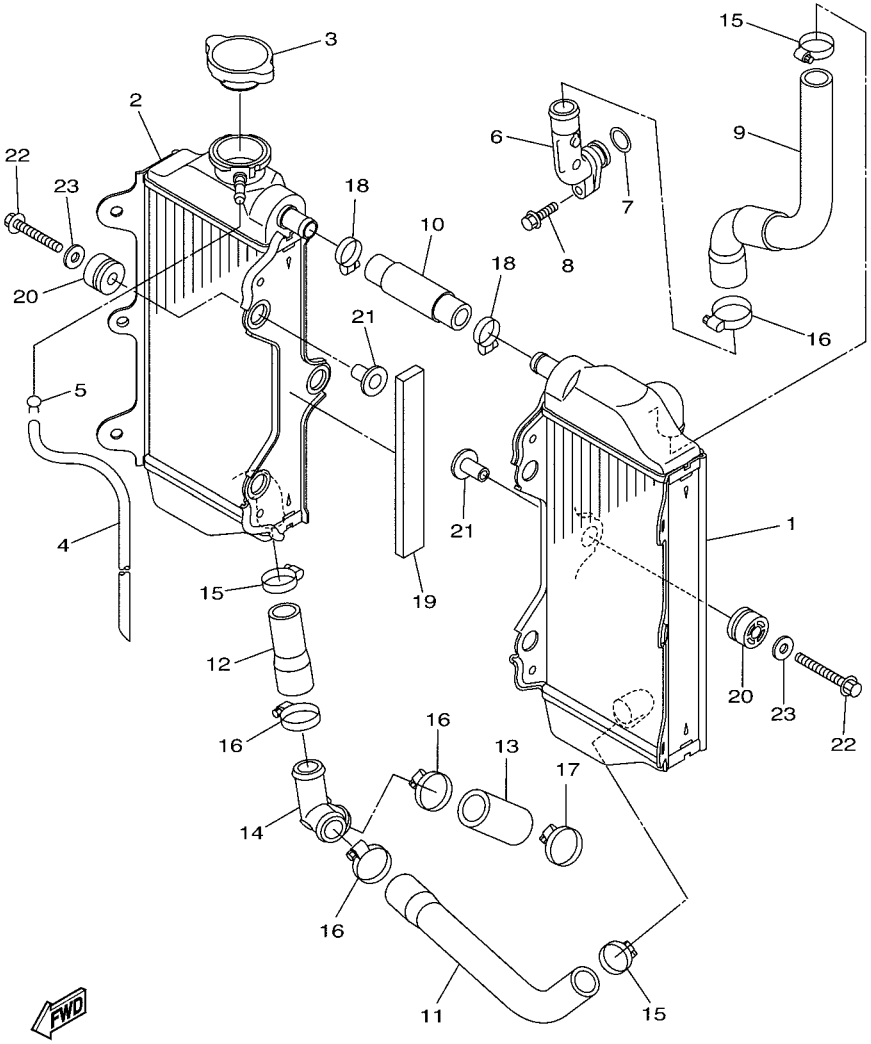

17D5110-J060

FIG. 6 RADIATOR & HOSE

REF. NO.	PART NO.	DESCRIPTION	17DD	17DE	17DF	17DG		REMARKS
1	17D–1240A–50	RADIATOR ASSY	1	1	1	1		
2	17D–12461–50	RADIATOR COMP	1	1	1	1		
3	5SL–12462–00	CAP, RADIATOR	1	1	1	1		
4	91A20–05065	TUBE, FLEXIBLE VINYL	1	1	1	1		
5	90467–090A2	CLIP	1	1	1	1		
6	5XC–12481–G0	PIPE 1	1	1	1	1		
7	93210–16275	O-RING	1	1	1	1		
8	91312–06020	BOLT	1	1	1	1		
9	17D–12576–50	HOSE 1	1	1	1	1		
10	17D–12577–50	HOSE 2	1	1	1	1		
11	17D–12578–50	HOSE 3	1	1	1	1		
12	17D–12579–50	HOSE 4	1	1	1	1		
13	17D–12588–50	HOSE 5	1	1	1	1		
14	17D–12581–50	JOINT, HOSE 1	1	1	1	1		
15	90450–25001	HOSE CLAMP ASSY	3	3	3	3		
16	90450–28001	HOSE CLAMP ASSY	4	4	4	4		
17	90450–32003	HOSE CLAMP ASSY	1	1	1	1		
18	90450–22001	HOSE CLAMP ASSY	2	2	2	2		
19	4KB–24181–00	DAMPER, LOCATING 1	1	1	1	1		
20	90480–15012	GROMMET	6	6	6	6		
21	90387–06065	COLLAR	6	6	6	6		
22	90105–06111	BOLT, FLANGE	6	6	6	6		
23	90201–06571	WASHER, PLATE	5	5	5	5		

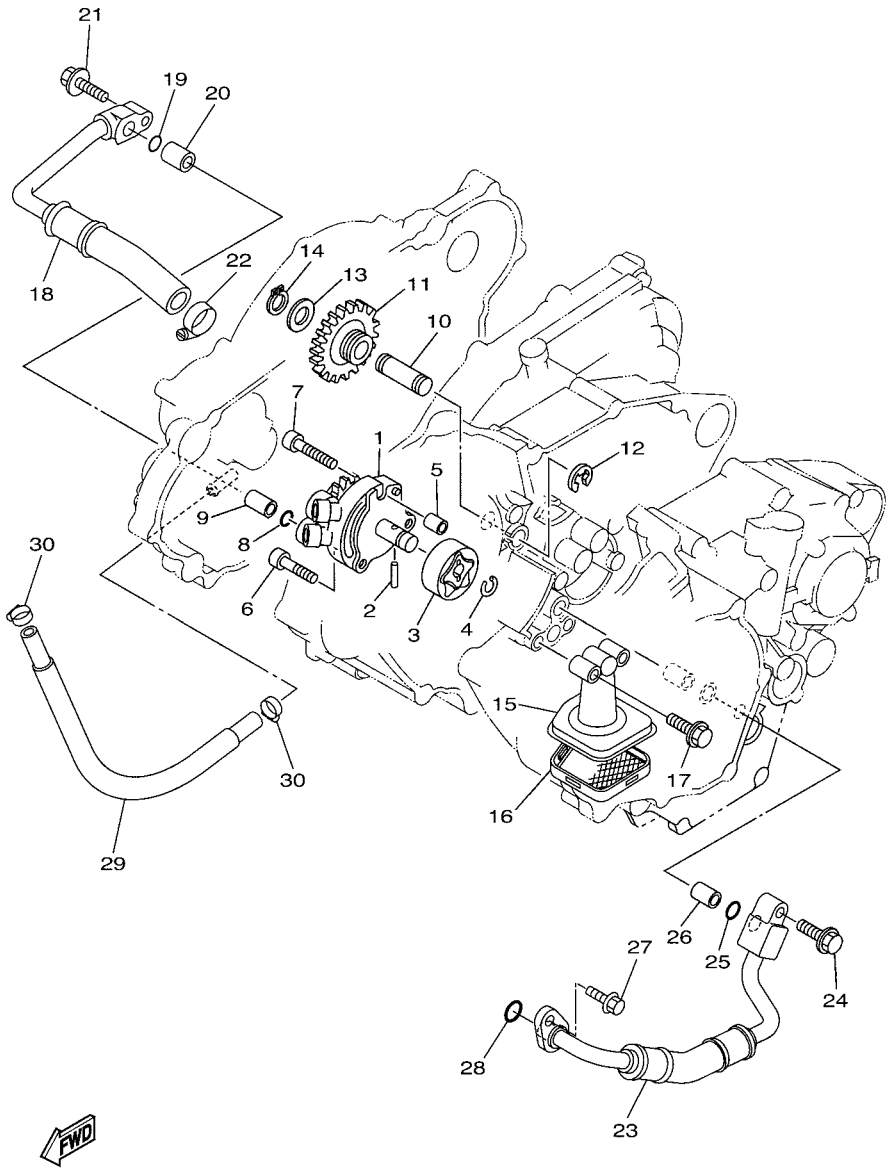

17D5110-J070

FIG. 7 OIL PUMP

REF. NO.	PART NO.	DESCRIPTION	17DD	17DE	17DF	17DG		REMARKS
1	5SG–13300–01	OIL PUMP ASSY	1	1	1	1		
2	93603–16219	PIN, DOWEL	1	1	1	1		
3	5NL–13320–00	ROTOR ASSY 2	1	1	1	1		
4	93440–10153	CIRCLIP	1	1	1	1		
5	99530–08012	PIN, DOWEL	1	1	1	1		
6	91312–06025	BOLT	2	2	2	2		
7	91317–06030	BOLT	1	1	1	1		
8	93210–10197	O-RING	1	1	1	1		
9	99530–10114	PIN, DOWEL	1	1	1	1		
10	5BE–13342–00	SHAFT, IDLE GEAR	1	1	1	1		
11	5NL–13341–00	GEAR, OIL PUMP IDLE	1	1	1	1		
12	99001–08600	CIRCLIP	1	1	1	1		
13	90201–12166	WASHER, PLATE	1	1	1	1		
14	99009–12400	CIRCLIP	1	1	1	1		
15	5XC–13412–00	HOUSING, STRAINER	1	1	1	1		
16	5NL–13411–00	STRAINER, OIL	1	1	1	1		
17	95022–06025	BOLT, FLANGE	2	2	2	2		
18	17D–13464–00	HOSE, OIL 1	1	1	1	1		
19	93210–10197	O-RING	1	1	1	1		
20	99530–10114	PIN, DOWEL	1	1	1	1		
21	95022–06025	BOLT, FLANGE	1	1	1	1		
22	90450–22001	HOSE CLAMP ASSY	1	1	1	1		
23	17D–13465–00	HOSE, OIL 2	1	1	1	1		
24	95022–06025	BOLT, FLANGE	1	1	1	1		
25	93210–10197	O-RING	1	1	1	1		
26	99530–10114	PIN, DOWEL	1	1	1	1		
27	95022–06016	BOLT, FLANGE	1	1	1	1		

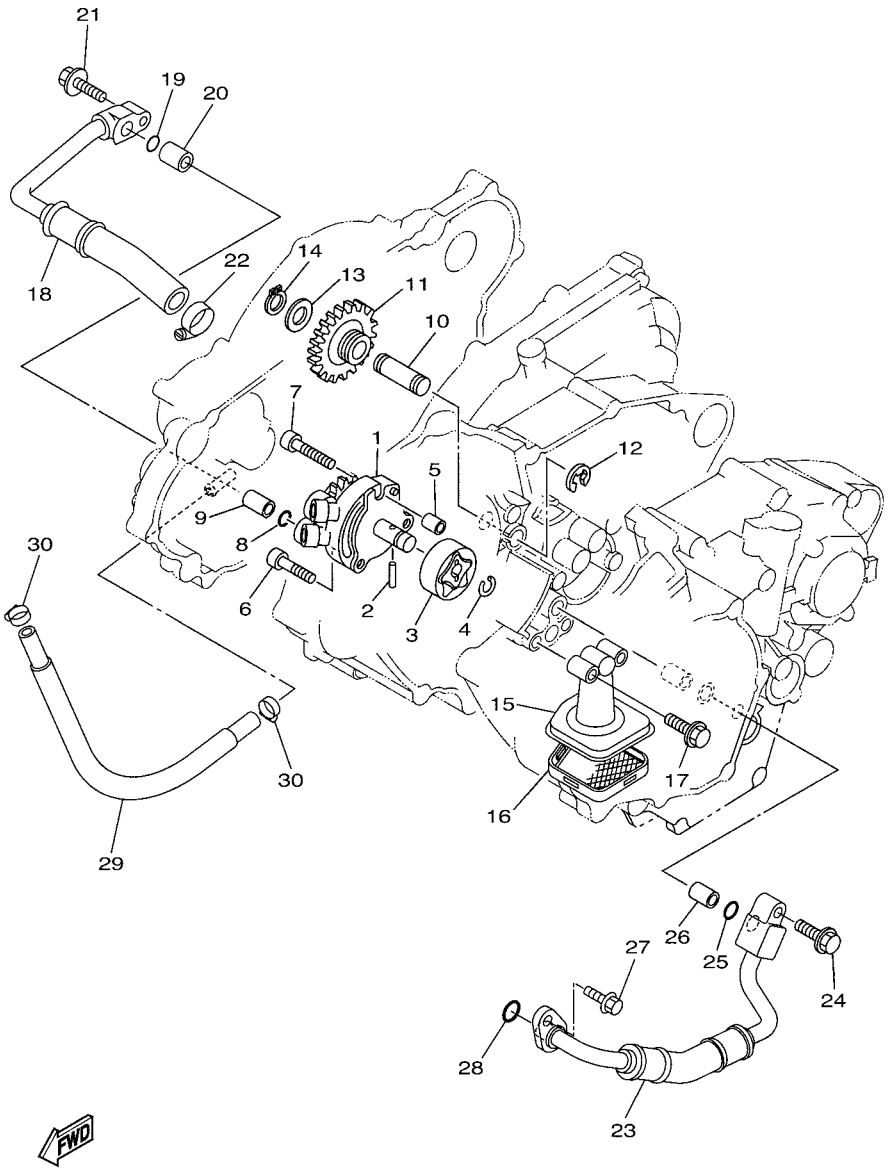

17D5110-J070

FIG. 7 OIL PUMP

REF. NO.	PART NO.	DESCRIPTION	17DD	17DE	17DF	17DG		REMARKS
28	93210–09754	O-RING	1	1	1	1		
29	90445–14017	HOSE	1	1	1	1		
30	90450–17001	HOSE CLAMP ASSY	2	2	2	2		

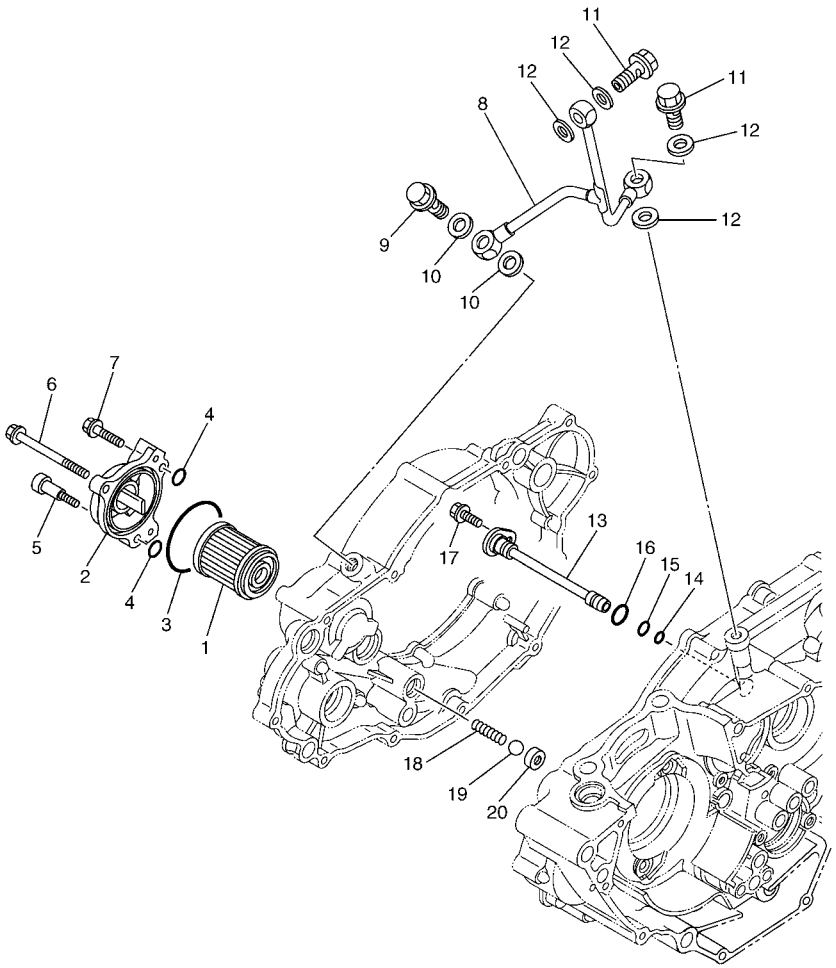

5XCG100-F080

FIG. 8 OIL CLEANER

REF. NO.	PART NO.	DESCRIPTION	17DD	17DE	17DF	17DG		REMARKS
1	5D3–13440–00	ELEMENT ASSY, OIL CLEANER	1	1	1	1		
2	5BE–13447–30	COVER, OIL ELEMENT	1	1	1	1		
3	93210–47675	O-RING	1	1	1	1		
4	93210–07135	O-RING	3	3	3	3		
5	90110–06228	BOLT, HEXAGON SOCKET HEAD	1	1	1	1		
6	91312–06065	BOLT	1	1	1	1		
7	91312–06025	BOLT	1	1	1	1		
8	5NL–13161–20	PIPE, DELIVERY 1	1	1	1	1		
9	90401–10015	BOLT, UNION	1	1	1	1		
10	90430–10188	GASKET	2	2	2	2		
11	90401–08006	BOLT, UNION	2	2	2	2		
12	90430–08119	GASKET	4	4	4	4		
13	5NL–13171–10	PIPE, DELIVERY 2	1	1	1	1		
14	93210–07003	O-RING	1	1	1	1		
15	93210–09525	O-RING	1	1	1	1		
16	93210–12010	O-RING	1	1	1	1		
17	95022–06012	BOLT, FLANGE	1	1	1	1		
18	90501–043E0	SPRING, COMPRESSION	1	1	1	1		
19	93503–08007	BALL	1	1	1	1		
20	583–13113–00	SEAT, CHECK BALL	1	1	1	1		

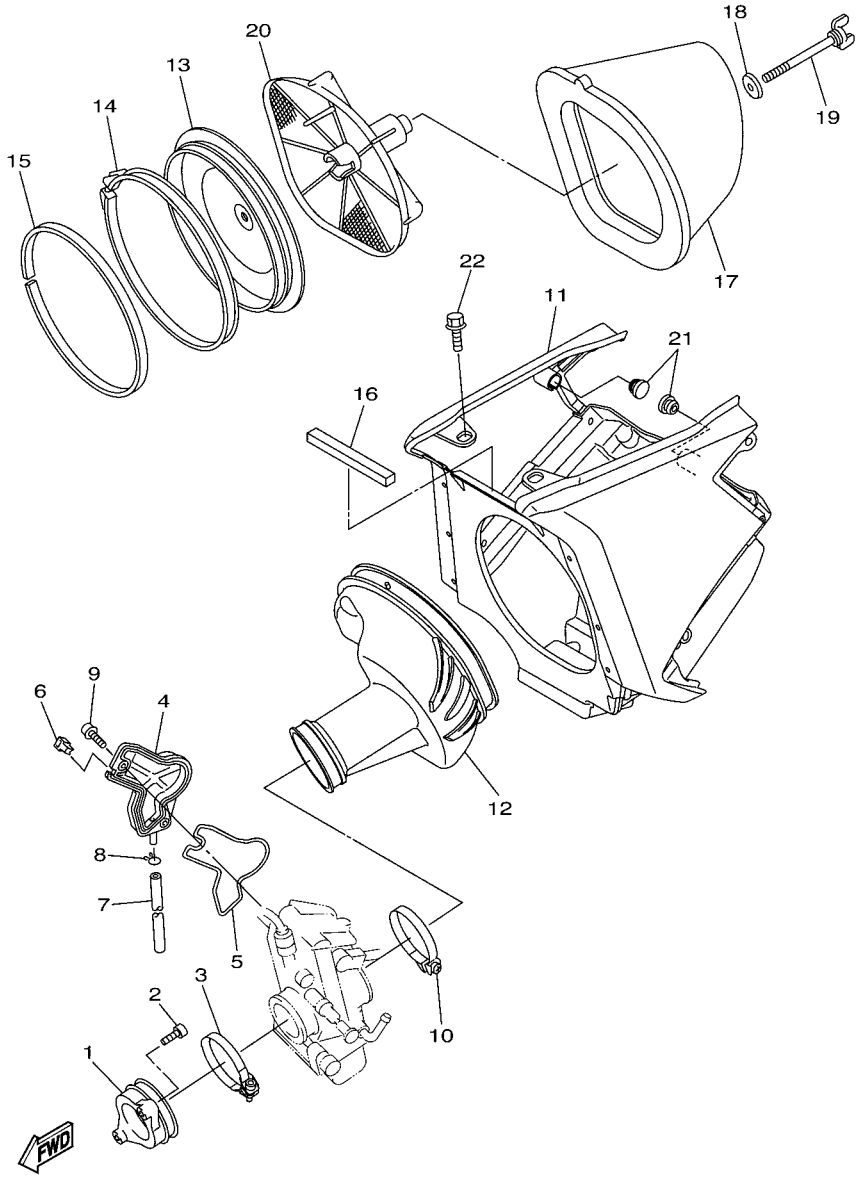

17D5110-J090

FIG. 9 INTAKE

REF. NO.	PART NO.	DESCRIPTION	17DD	17DE	17DF	17DG		REMARKS
1	5XC–13597–30	JOINT, CARBURETOR 3	1	1	1	1		
2	91312–06025	BOLT	2	2	2	2		
3	90450–58006	HOSE CLAMP ASSY	1	1	1	1		
4	5TA–14293–00	COVER 1	1	1	1	1		
5	5TA–14227–00	GASKET	1	1	1	1		
6	5TA–14239–00	SEAL	1	1	1	1		
7	5TA–14987–00	HOSE	1	1	1	1		
8	3TJ–14137–40	CLIP	1	1	1	1		
9	90110–05038	BOLT, HEXAGON SOCKET HEAD	2	2	2	2		
10	90450–61002	HOSE CLAMP ASSY	1	1	1	1		
11	17D–14401–00	AIR CLEANER CASE ASSY	1	1	1	1		
12	17D–14453–50	JOINT, AIR CLEANER 1	1	1	1	1		
13	5NY–14459–00	HOLDER, GUIDE	1	1	1	1		
14	5NY–14455–20	BAND	1	1	1	1		
15	5NY–14442–00	SPACER	1	1	1	1		
16	17D–14452–00	SEAL	1	1	1	1		
17	4XM–14451–00	ELEMENT, AIR CLEANER	1	1	1	1		
18	90209–06096	WASHER	1	1	1	1		
19	90122–06005	BOLT, WING	1	1	1	1		
20	5BE–14458–10	GUIDE	1	1	1	1		
21	90480–10068	GROMMET	2	2	2	2		
22	90105–06170	BOLT, FLANGE	2	2	2	2		

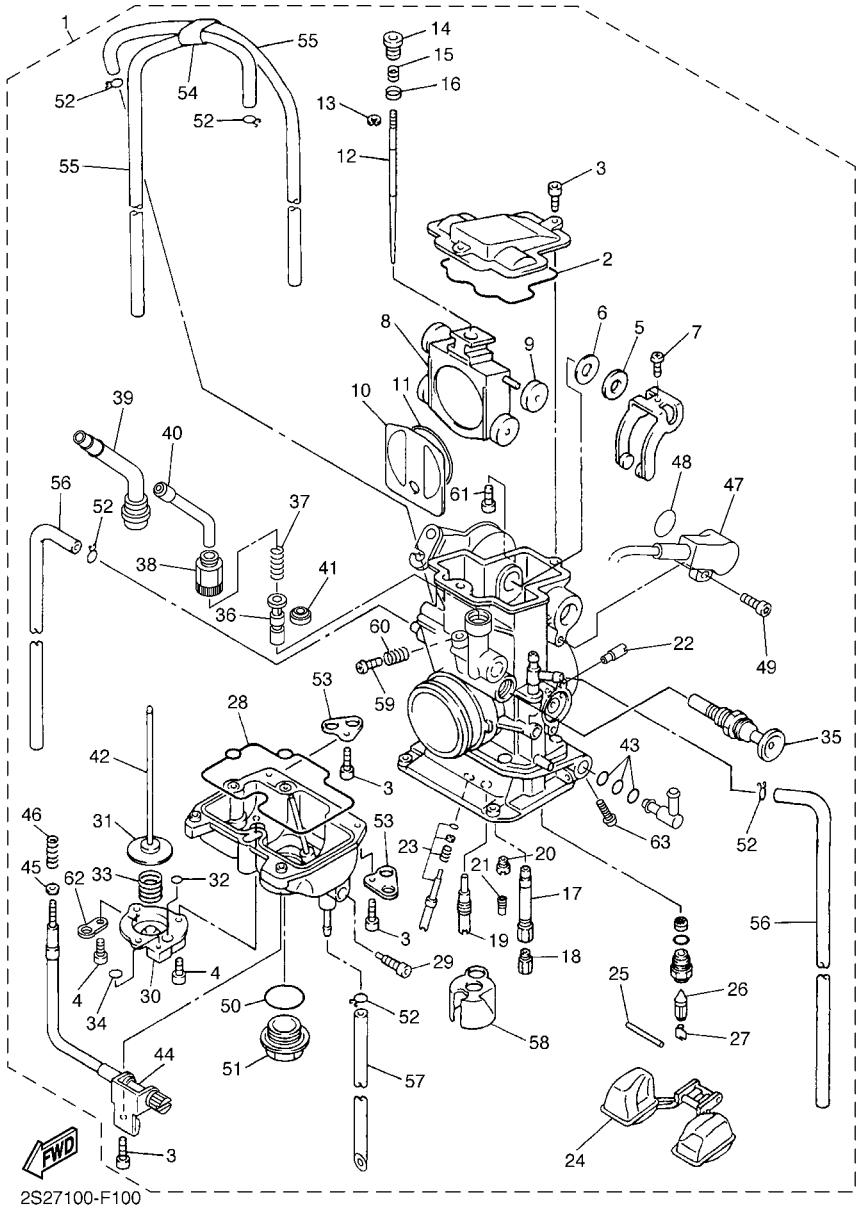

FIG. 10 CARBURETOR

REF. NO.	PART NO.	DESCRIPTION	17DD	17DE	17DF	17DG		REMARKS
1	17D–14101–50	CARBURETOR ASSY 1	1					
	17D–14101–60	CARBURETOR ASSY 1		1	1	1		
2	5JG–14959–00	.GASKET	1	1	1	1		
3	91316–04012	.BOLT	6	6	6	6		
4	688–14592–00	.SCREW	3	3	3	3		
5	90202–08045	.WASHER, PLATE	1	1	1	1		
6	5JG–14951–00	.WASHER	1	1	1	1		
7	5JG–14522–00	.SCREW, ADJUST	1	1	1	1		
8	2S2–14388–00	.VALVE, VACUUM CONTROL	1	1	1	1		
9	3TJ–14267–40	.ROLLER	1	1	1	1		
10	5JG–14546–01	.VALVE, NEEDLE	1	1	1	1		
11	4FN–14997–00	.SEAL	1	1	1	1		
12	5TA–14916–JR	.NEEDLE (#NDJR)	1					STD
	5TA–14916–KR	.NEEDLE (#NHKR)		1	1	1		STD
	5TA–14916–JN	.NEEDLE (#NDJN)	1					AP
	5TA–14916–JP	.NEEDLE (#NDJP)	1					AP
	5TA–14916–J1	.NEEDLE (#NDJQ)	1					AP
	5TA–14916–JS	.NEEDLE (#NDJS)	1					AP
	5TA–14916–JT	.NEEDLE (#NDJT)	1					AP
	5TA–14916–JU	.NEEDLE (#NDJU)	1					AP
	5TA–14916–VN	.NEEDLE (#NCVN)	1					AP
	5TA–14916–VP	.NEEDLE (#NCVP)	1					AP
	5TA–14916–V1	.NEEDLE (#NCVQ)	1					AP
	5TA–14916–VR	.NEEDLE (#NCVR)	1					AP
	5TA–14916–VS	.NEEDLE (#NCVS)	1					AP
	5TA–14916–VT	.NEEDLE (#NCVT)	1					AP
	5TA–14916–VU	.NEEDLE (#NCVU)	1					AP

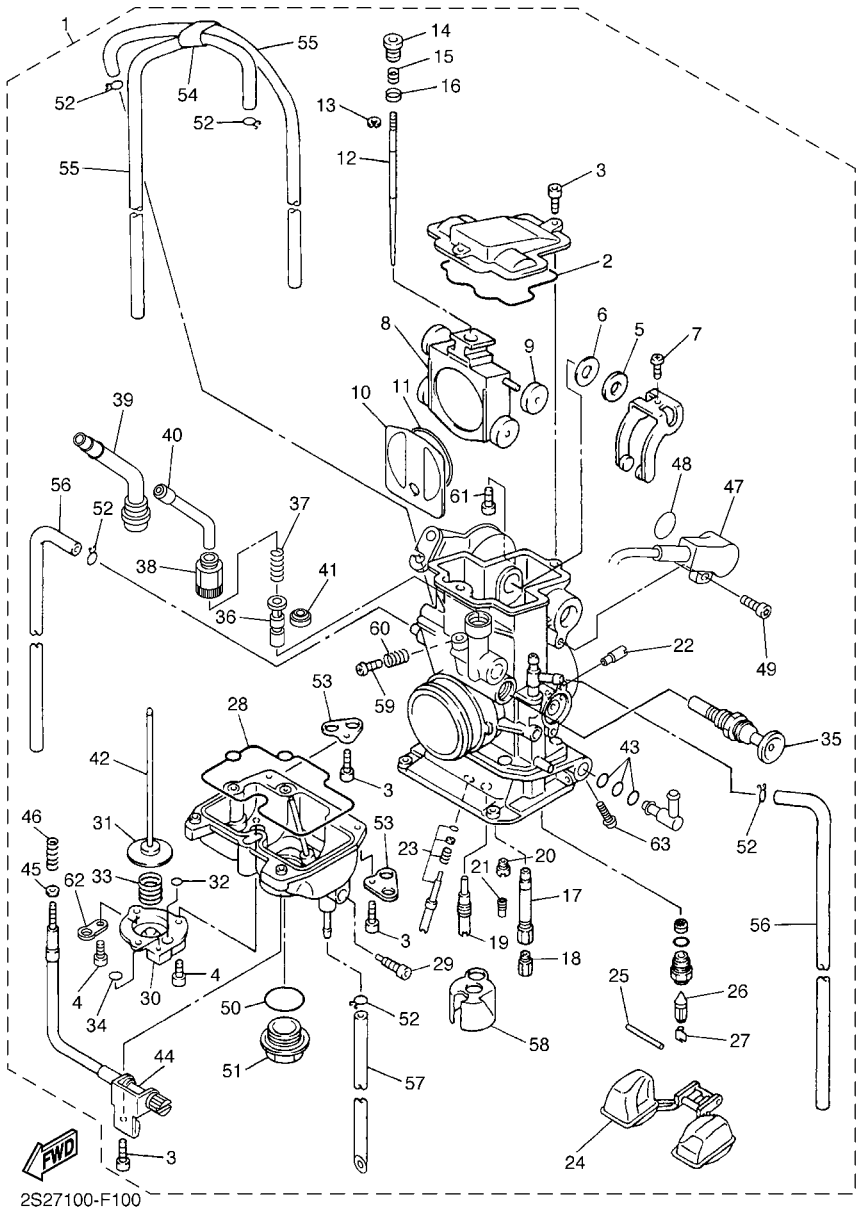

FIG. 10 CARBURETOR

REF. NO.	PART NO.	DESCRIPTION	17DD	17DE	17DF	17DG		REMARKS
12	5TA–14916–LN	.NEEDLE (#NFLN)		1	1	1		AP
	5TA–14916–LP	.NEEDLE (#NFLP)		1	1	1		AP
	5TA–14916–L1	.NEEDLE (#NFLQ)		1	1	1		AP
	5TA–14916–LS	.NEEDLE (#NFLS)		1	1	1		AP
	5TA–14916–LT	.NEEDLE (#NFLT)		1	1	1		AP
	5TA–14916–LU	.NEEDLE (#NFLU)		1	1	1		AP
	5TA–14916–PN	.NEEDLE (#NFPN)		1	1	1		AP
	5TA–14916–PP	.NEEDLE (#NFPP)		1	1	1		AP
	5TA–14916–P1	.NEEDLE (#NFPQ)		1	1	1		AP
	5TA–14916–PR	.NEEDLE (#NFPR)		1	1	1		AP
	5TA–14916–PS	.NEEDLE (#NFPS)		1	1	1		AP
	5TA–14916–PT	.NEEDLE (#NFPT)		1	1	1		AP
	5TA–14916–PU	.NEEDLE (#NFPU)		1	1	1		AP
13	3TJ–14159–40	.CLIP	1	1	1	1		
14	5JG–14521–00	.SCREW, ADJUST	1	1	1	1		
15	5JG–14275–00	.SPRING	1	1	1	1		
16	5JG–14264–00	.COLLAR	1	1	1	1		
17	5XC–14947–00	.JET, NEEDLE	1	1	1	1		
18	4MX–14943–43	.JET, MAIN (#180)	1	1	1	1		STD
	4MX–14943–41	.JET, MAIN (#170)	1	1	1	1		AP
	4MX–14943–92	.JET, MAIN (#172)	1	1	1	1		AP
	4MX–14943–42	.JET, MAIN (#175)	1	1	1	1		AP
	4MX–14943–93	.JET, MAIN (#178)	1	1	1	1		AP
	4MX–14943–94	.JET, MAIN (#182)	1	1	1	1		AP
	4MX–14943–44	.JET, MAIN (#185)	1	1	1	1		AP
	4MX–14943–95	.JET, MAIN (#188)	1	1	1	1		AP
	4MX–14943–45	.JET, MAIN (#190)	1	1	1	1		AP

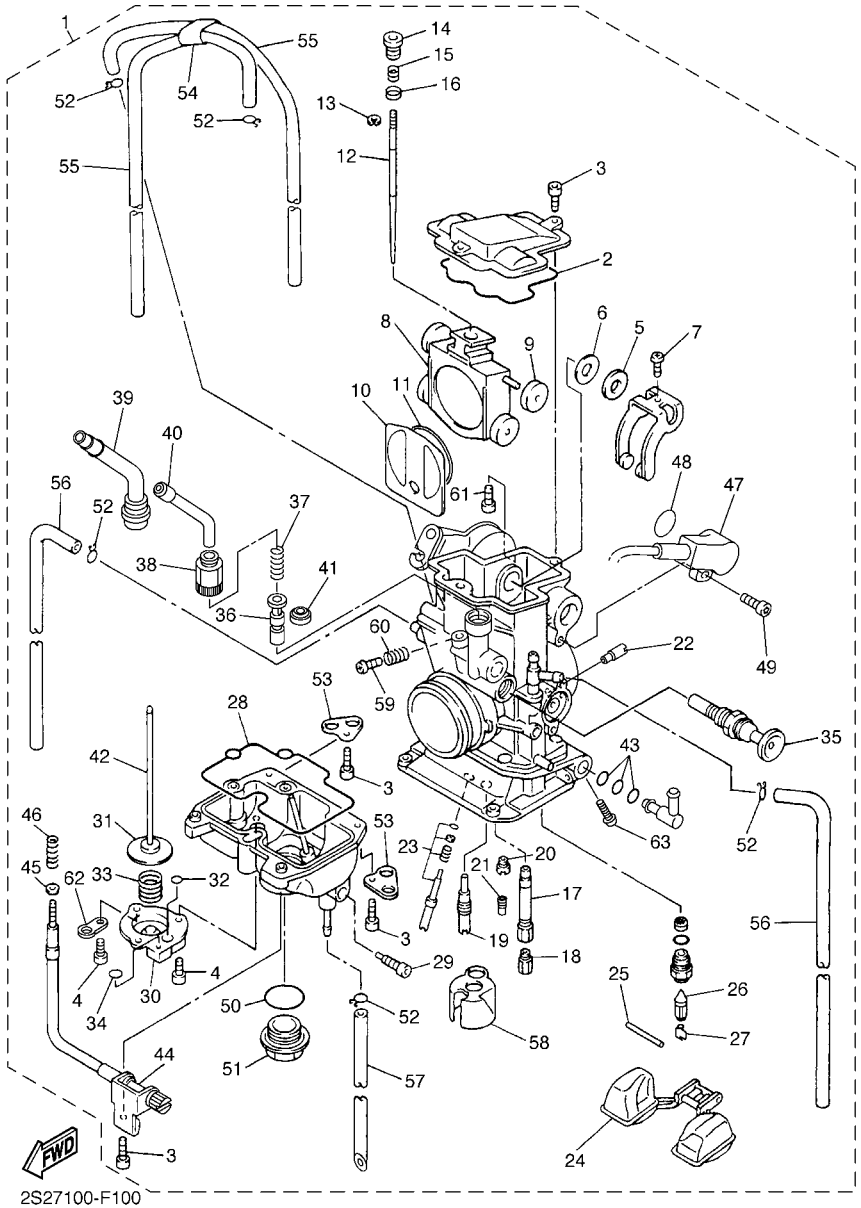

FIG. 10 CARBURETOR

REF. NO.	PART NO.	DESCRIPTION	17DD	17DE	17DF	17DG		REMARKS
19	4MX–14948–05	.JET, SLOW (#45)	1					STD
	4MX–14948–04	.JET, SLOW (#42)		1	1	1		STD
	4MX–14948–03	.JET, SLOW (#40)	1	1	1	1		AP
	4MX–14948–06	.JET, SLOW (#48)	1	1	1	1		AP
	4MX–14948–04	.JET, SLOW (#42)	1					AP
	4MX–14948–07	.JET, SLOW (#50)	1					AP
	4MX–14948–02	.JET, SLOW (#38)		1	1	1		AP
	4MX–14948–05	.JET, SLOW (#45)		1	1	1		AP
20	3TJ–1494F–16	.JET (#72)	1	1	1	1		STD
	3TJ–1494F–13	.JET (#65)	1	1	1	1		AP
	3TJ–1494F–14	.JET (#68)	1	1	1	1		AP
	3TJ–1494F–15	.JET (#70)	1	1	1	1		AP
	3TJ–1494F–17	.JET (#75)	1	1	1	1		AP
	3TJ–1494F–18	.JET (#78)	1	1	1	1		AP
	3TJ–1494F–19	.JET (#80)	1	1	1	1		AP
21	4JT–1494F–15	.JET (#70)	1					STD
	4JT–1494F–29	.JET(#110)		1	1	1		STD
	4JT–1494F–19	.JET (#80)	1	1	1	1		AP
	4JT–1494F–23	.JET (#90)	1	1	1	1		AP
	4JT–1494F–27	.JET(#100)	1	1	1	1		AP
	4JT–1494F–03	.JET (#40)	1					AP
	4JT–1494F–07	.JET (#50)	1			1		AP
	4JT–1494F–11	.JET (#60)	1			1		AP
	4JT–1494F–35	.JET(#140)		1	1			AP
	4JT–1494F–31	.JET(#120)		1	1	1		AP
	4JT–1494F–33	.JET(#130)		1	1	1		AP
	4JT–1494F–15	.JET (#70)				1		AP

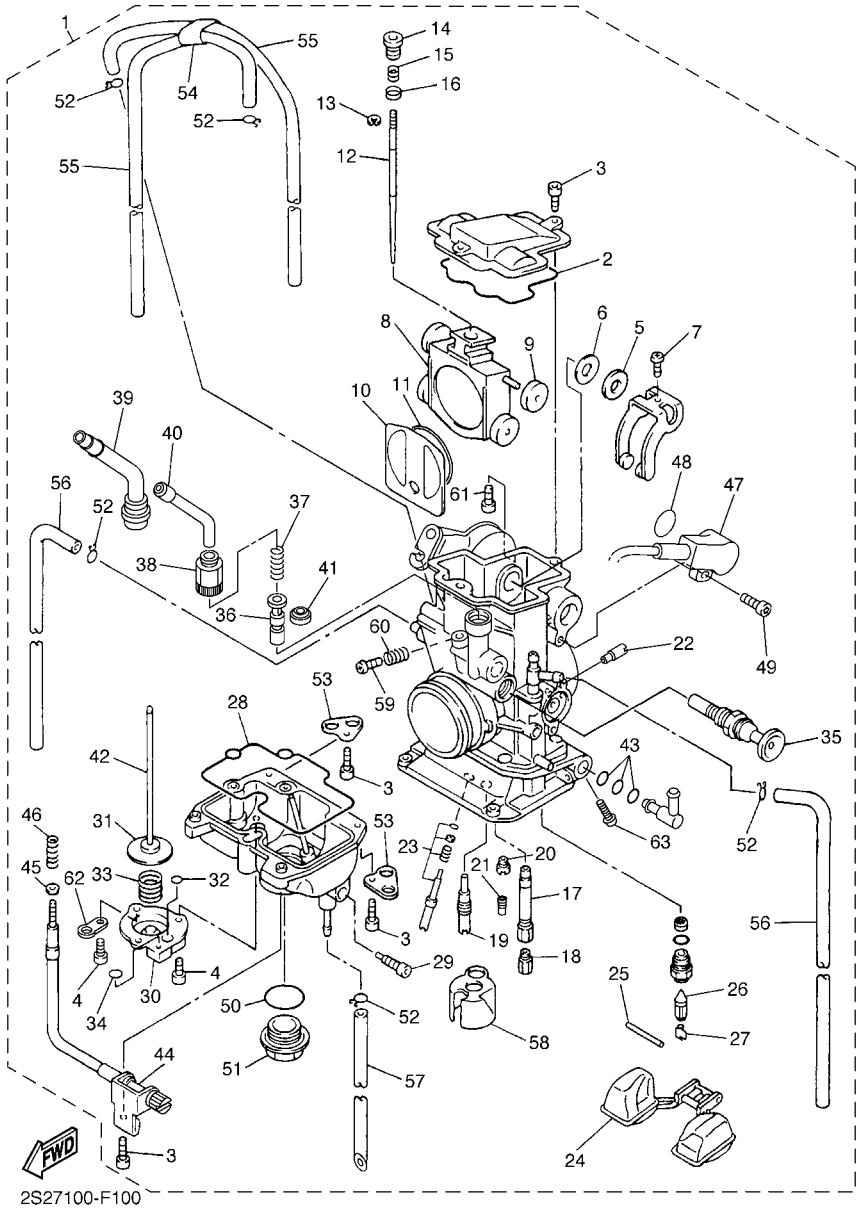

FIG. 10 CARBURETOR

REF. NO.	PART NO.	DESCRIPTION	17DD	17DE	17DF	17DG		REMARKS
22	5TA–14943–28	.JET, MAIN (#105)	1	1	1	1		
23	5NL–14105–00	.PILOT SCREW SET	1	1	1	1		
24	4SR–14985–00	.FLOAT	1	1	1	1		
25	676–14548–00	.PIN, FLOAT ARM	1	1	1	1		
26	4MX–14392–00	.VALVE, NEEDLE	1	1	1	1		
27	633–14159–00	.CLIP	1	1	1	1		
28	5JG–14984–00	.GASKET, FLOAT CHAMBER	1	1	1	1		
29	3TJ–14191–40	.PLUG, DRAIN	1	1	1	1		
30	3TJ–14293–40	.COVER 1	1	1	1	1		
31	5JG–14940–76	.DIAPHRAGM, ACC PUMP (DPH#30)	1	1	1	1		STD
	5JG–14940–16	.DIAPHRAGM, ACC PUMP (DPH#45)	1	1	1	1		AP
	5JG–14940–17	.DIAPHRAGM, ACC PUMP (DPH#35)	1	1	1	1		AP
	5JG–14940–18	.DIAPHRAGM, ACC PUMP (DPH#25)	1	1	1	1		AP
32	3TJ–14536–40	.GASKET	1	1	1	1		
33	3TJ–14933–40	.SPRING, DIAPHRAGM	1	1	1	1		
34	6H4–14561–00	.O-RING	1	1	1	1		
35	5XC–14171–00	.PLUNGER, STARTER	1	1	1	1		
36	5TA–14371–00	.PLUNGER, STARTER	1	1	1	1		
37	5TA–14335–00	.SPRING, PLUNGER	1	1	1	1		
38	5TA–14991–00	.SCREW	1	1	1	1		
39	2S2–14374–00	.CAP, PLUNGER	1	1	1	1		
40	5TA–14155–00	.GUIDE, CABLE	1	1	1	1		
41	5TA–14997–00	.SEAL	1	1	1	1		
42	5JG–14379–00	.ROD, STARTER	1	1	1	1		
43	3TJ–14564–40	.O-RING	3	3	3	3		
44	5XC–14922–00	.SCREW, THROTTLE	1	1	1	1		
45	90201–08410	.WASHER, PLATE	1	1	1	1		

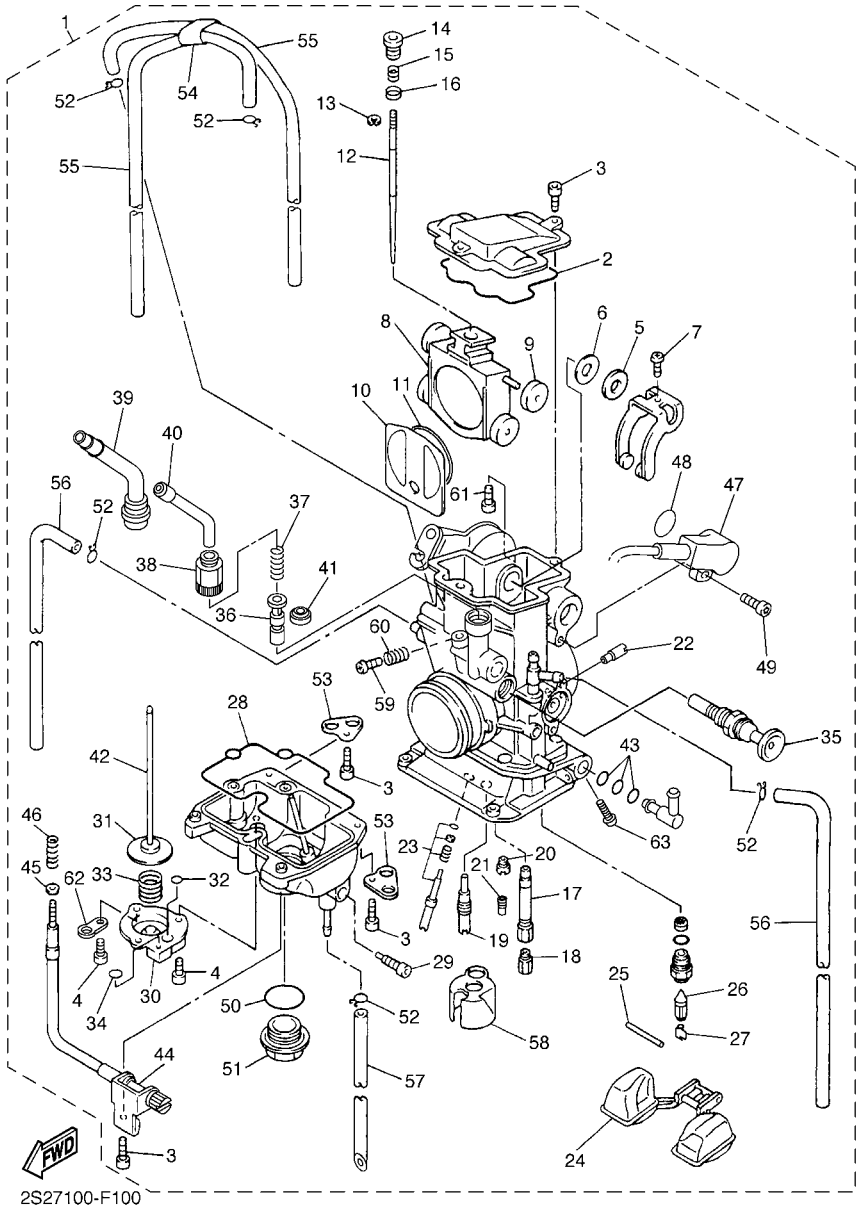

FIG. 10 CARBURETOR

REF. NO.	PART NO.	DESCRIPTION	17DD	17DE	17DF	17DG		REMARKS
46	5TA–14934–00	.SPRING, THROTTLE STOP	1	1	1	1		
47	17D–85885–00	.THROTTLE SENSOR ASSY	1	1	1	1		
48	5NX–14562–00	.O-RING	1	1	1	1		
49	5NX–14216–00	.SCREW	1	1	1	1		
50	4MX–14561–00	.O-RING	1	1	1	1		
51	4MX–14115–00	.PLUG, SCREW	1	1	1	1		
52	3TJ–14137–40	.CLIP	5	5	5	5		
53	5BE–14146–00	.PLATE	2	2	2	2		
54	5TA–14261–00	.HOLDER	1	1	1	1		
55	5UL–14196–00	.PIPE, OVER FLOW 1	2	2	2	2		
56	5TA–14197–00	.PIPE	2	2	2	2		
57	5TJ–14987–00	.HOSE	1	1	1	1		
58	5JG–14346–00	.PLATE	1	1	1	1		
59	5JG–14565–00	.SCREW	1	1	1	1		
60	5JG–14531–00	.SPRING, ADJUST SCREW	1	1	1	1		
61	5NL–14591–00	.SCREW	1	1	1	1		
62	5PA–14146–00	.PLATE	1	1	1	1		
63	5XD–14325–00	.SCREW, PAN HEAD	1	1	1	1		

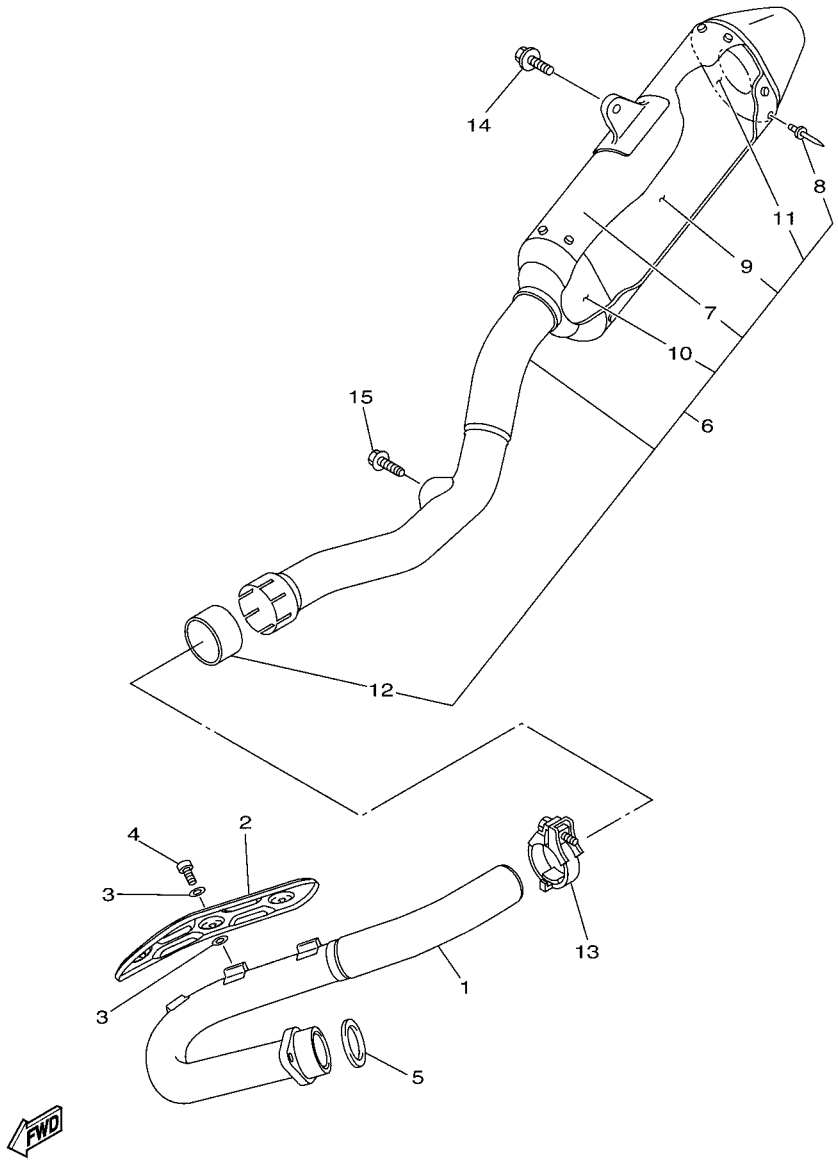

17D5110-J110

FIG. 11 EXHAUST

REF. NO.	PART NO.	DESCRIPTION	17DD	17DE	17DF	17DG		REMARKS
1	17D–14611–50	PIPE, EXHAUST 1	1	1	1	1		
2	5XC–14628–R0	PROTECTOR, EXHAUST PIPE	1	1	1	1		
3	90201–05017	WASHER, PLATE	6	6	6	6		
4	98980–06008	SCREW, BIND	3	3	3	3		
5	5NL–14613–00	GASKET, EXHAUST PIPE	1	1	1	1		
6	17D–14750–50	SILENCER ASSY	1					
	17D–14750–60	SILENCER ASSY		1	1	1		
7	17D–1466G–50	.BODY, SILENCER	1	1	1	1		
8	90267–48084	.RIVET, BLIND	16	16	16	16		
9	17D–1469A–50	.FIBER	1	1	1	1		
10	2S2–1469E–00	.FIBER	1	1	1	1		
11	2S2–1469F–00	.FIBER	1	1	1	1		
12	5XD–14714–00	.GASKET, MUFFLER	1	1	1	1		
13	5BE–14788–00	BAND, SILENCER	1	1	1	1		
14	90119–08133	BOLT, WITH WASHER	1	1	1	1		
15	90105–08224	BOLT, FLANGE	1	1	1	1		

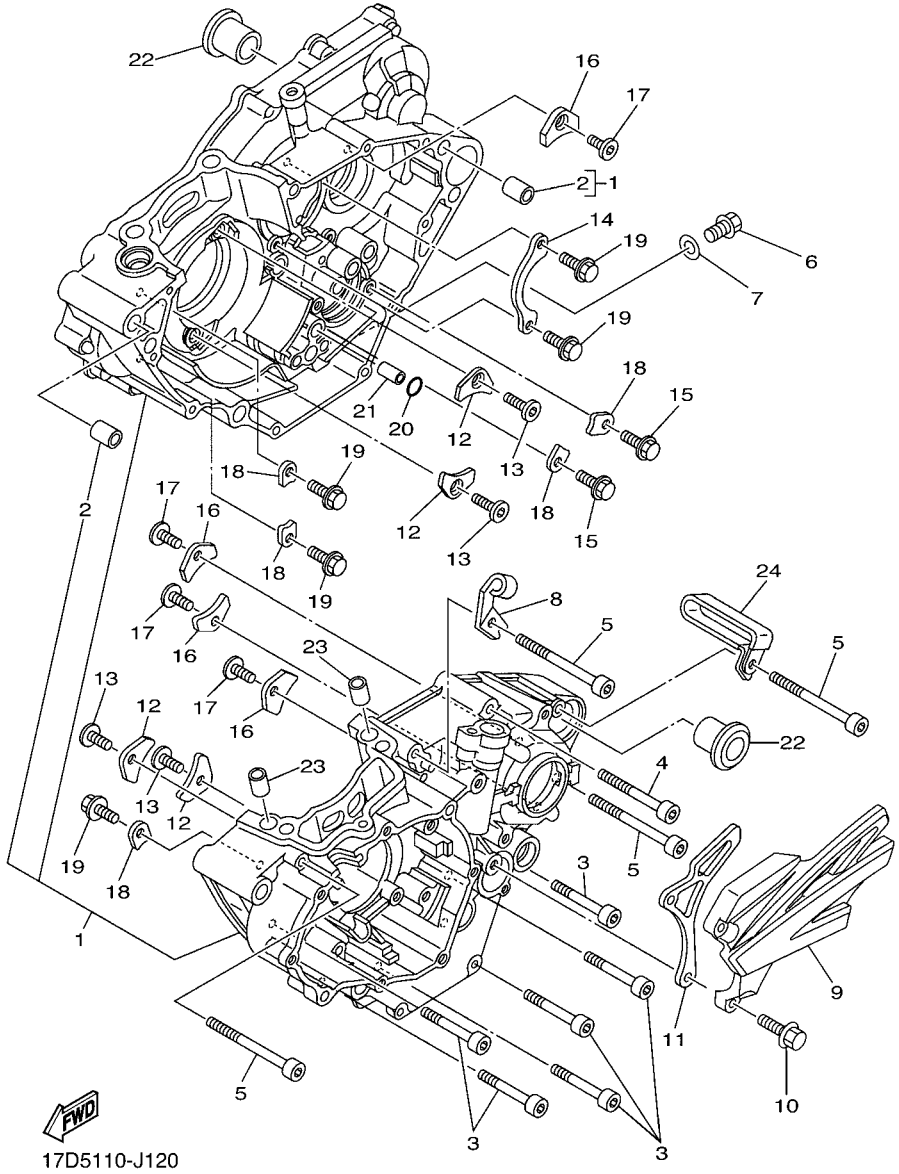

FIG. 12 CRANKCASE

REF. NO.	PART NO.	DESCRIPTION	17DD	17DE	17DF	17DG		REMARKS
1	5XC–15100–30–YX	CRANKCASE ASSY	1	1	1	1		
2	93612–16254	.PIN, DOWEL	2	2	2	2		
3	91312–06045	BOLT	6	6	6	6		
4	91312–06055	BOLT	1	1	1	1		
5	91312–06070	BOLT	4	4	4	4		
6	95022–10016	BOLT, FLANGE	1	1	1	1		
7	90430–10188	GASKET	1	1	1	1		
8	5NL–15441–01	HOLDER, CLUTCH CABLE	1	1	1	1		
9	17D–15421–50	COVER, CRANKCASE 2	1	1	1	1		
10	90105–06189	BOLT, FLANGE	2	2	2	2		
11	5NL–17466–00	GUIDE, CHAIN	1	1	1	1		
12	5BE–15383–01	PLATE, BEARING COVER	4	4	4	4		
13	90151–06044	SCREW, COUNTERSUNK	4	4	4	4		
14	5NL–15388–00	PLATE, BEARING COVER	1	1	1	1		
15	90105–06081	BOLT, FLANGE	2	2	2	2		
16	4JT–15381–01	PLATE, BEARING COVER	4	4	4	4		
17	90149–06074	SCREW	4	4	4	4		
18	5DH–18562–00	PLATE, STOPPER 2	5	5	5	5		
19	90105–06081	BOLT, FLANGE	5	5	5	5		
20	93210–10197	O-RING	1	1	1	1		
21	99530–10114	PIN, DOWEL	1	1	1	1		
22	90387–18007	COLLAR	2	2	2	2		
23	99530–10116	PIN, DOWEL	2	2	2	2		
24	90465–10013	CLAMP	1	1	1	1		

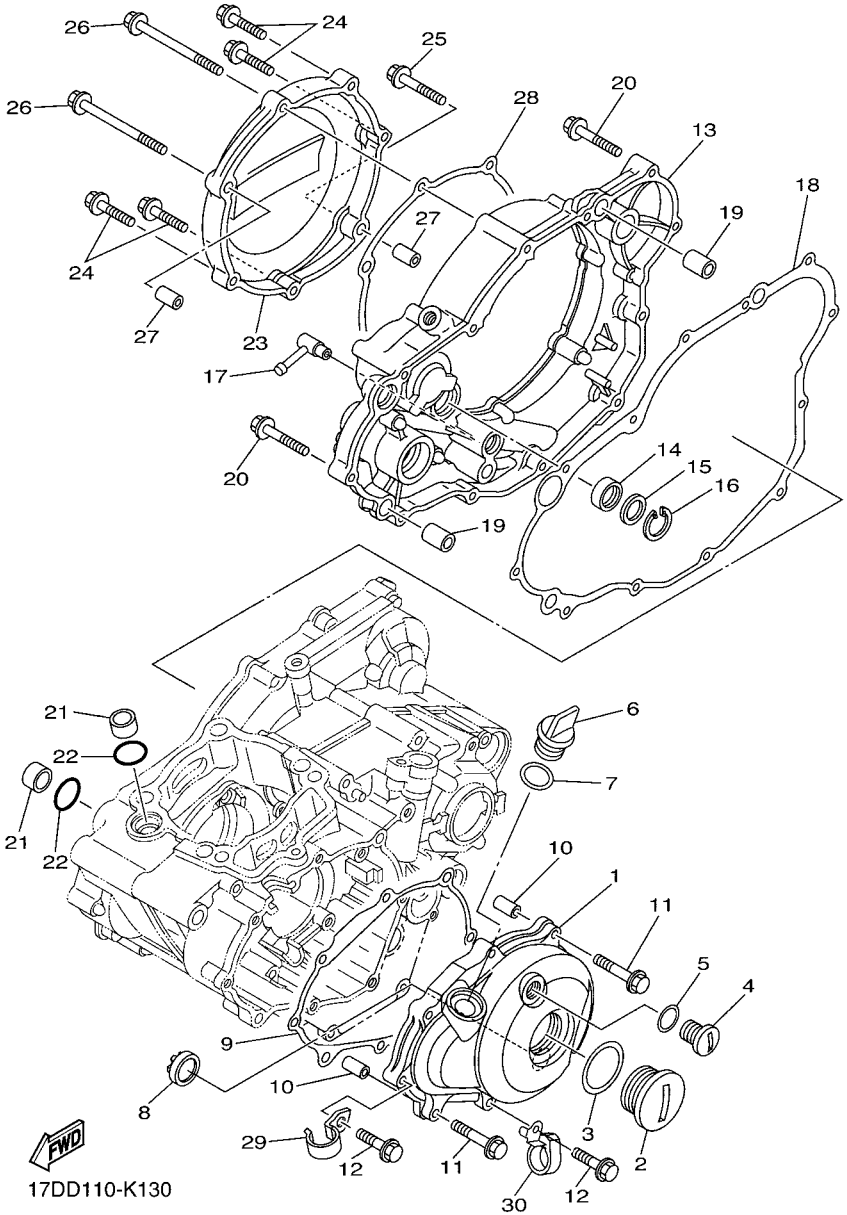

FIG. 13 CRANKCASE COVER 1

REF. NO.	PART NO.	DESCRIPTION	17DD	17DE	17DF	17DG		REMARKS
1	17D–15411–50	COVER, CRANKCASE 1	1	1	1	1		
2	90340–32006	PLUG, STRAIGHT SCREW	1	1	1	1		
3	93210–32172	O-RING	1	1	1	1		
4	90340–14015	PLUG, STRAIGHT SCREW	1	1	1	1		
5	93210–14369	O-RING	1	1	1	1		
6	3Y1–15363–10	PLUG, OIL	1	1	1	1		
7	93210–19123	O-RING	1	1	1	1		
8	3Y1–15361–00	GAUGE, LEVEL	1	1	1	1		
9	5NL–15451–00	GASKET, CRANKCASE COVER 1	1	1	1	1		
10	99530–08016	PIN, DOWEL	2	2	2	2		
11	95022–06035	BOLT, FLANGE	2	2	2	2		
12	95022–06025	BOLT, FLANGE	6	6	6	6		
13	5XC–15431–01	COVER, CRANKCASE 3	1	1	1	1		
14	93101–14164	OIL SEAL	1	1	1	1		
15	90201–15701	WASHER, PLATE (T=1.0)	1	1	1	1		
16	99009–22500	CIRCLIP	1	1	1	1		
17	5XC–15373–00	PIPE, BREATHER	1	1	1	1		
18	5NL–15462–00	GASKET, CRANKCASE COVER 3	1	1	1	1		
19	91812–16001	PIN, DOWEL	2	2	2	2		
20	95022–06035	BOLT, FLANGE	8	8	8	8		
21	5NL–12564–00	PIPE, WATER	2	2	2	2		
22	93210–16716	O-RING	2	2	2	2		
23	5NL–15415–40	COVER, GENERATOR	1	1	1	1		
24	95022–06025	BOLT, FLANGE	4	4	4	4		
25	95022–06035	BOLT, FLANGE	1	1	1	1		
26	90105–06098	BOLT, FLANGE	2	2	2	2		
27	99530–08016	PIN, DOWEL	2	2	2	2		

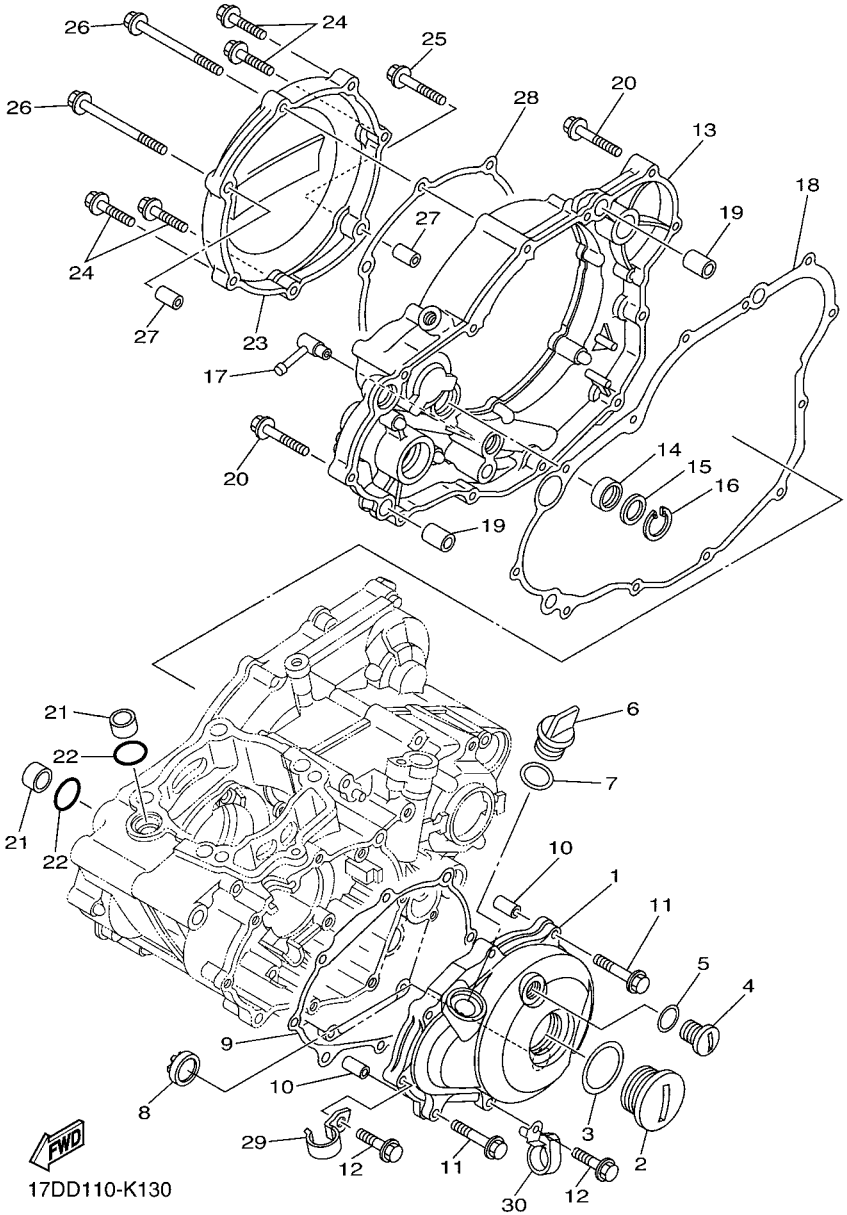

FIG. 13 CRANKCASE COVER 1

REF. NO.	PART NO.	DESCRIPTION	17DD	17DE	17DF	17DG		REMARKS
28	5NL–15453–10	GASKET	1	1	1	1		
29	90465–08029	CLAMP	1	1	1	1		
30	17D–15378–00	HOLDER	1	1	1	1		

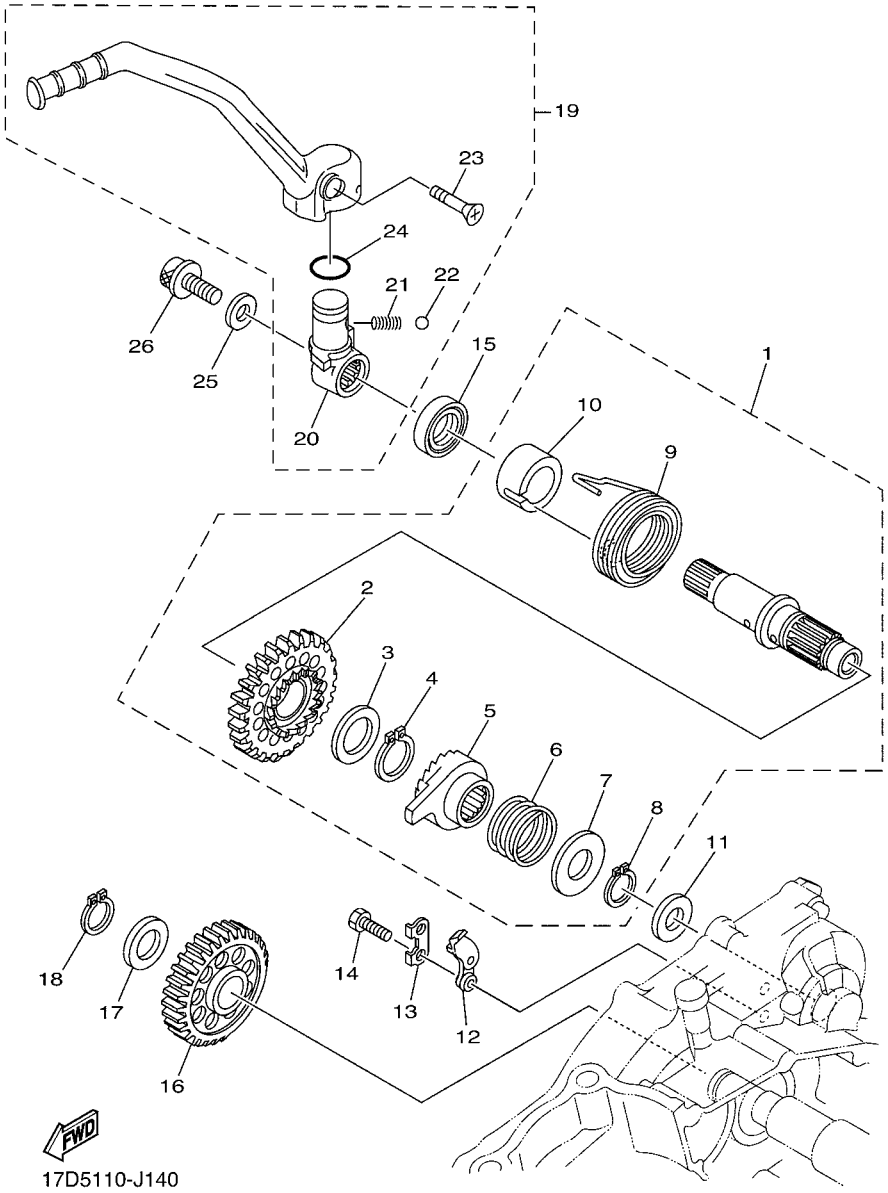

FIG. 14 STARTER

REF. NO.	PART NO.	DESCRIPTION	17DD	17DE	17DF	17DG		REMARKS
1	5NL–15601–20	KICK SHAFT ASSY	1	1	1	1		
2	5NL–15641–20	.GEAR, KICK	1	1	1	1		
3	90201–20685	.WASHER, PLATE (T=0.5)	1	1	1	1		
4	93410–20038	.CIRCLIP	1	1	1	1		
5	2S2–15671–00	.WHEEL, RATCHET	1	1	1	1		
6	90501–160A2	.SPRING, COMPRESSION	1	1	1	1		
7	90201–167P7	.WASHER, PLATE	1	1	1	1		
8	99009–16400	.CIRCLIP	1	1	1	1		
9	90508–30743	.SPRING, TORSION	1	1	1	1		
10	5NL–15664–00	.GUIDE, SPRING	1	1	1	1		
11	90201–162H4	WASHER, PLATE	1	1	1	1		
12	5SG–15668–00	STOPPER	1	1	1	1		
13	214–15686–00	WASHER, LOCK	1	1	1	1		
14	90101–06044	BOLT	2	2	2	2		
15	93102–18278	OIL SEAL	1	1	1	1		
16	5NL–15651–00	GEAR, KICK IDLE	1	1	1	1		
17	90201–177G4	WASHER, PLATE	1	1	1	1		
18	99009–17400	CIRCLIP	1	1	1	1		
19	17D–15620–50	KICK CRANK ASSY	1	1	1	1		
20	17D–15621–50	.BOSS, KICK CRANK	1	1	1	1		
21	90501–147A5	.SPRING, COMPRESSION	1	1	1	1		
22	93507–32009	.BALL	1	1	1	1		
23	90151–06045	.SCREW, COUNTERSUNK	1	1	1	1		
24	93210–17570	.O-RING	1	1	1	1		
25	90201–08048	WASHER, PLATE	1	1	1	1		
26	90110–08051	BOLT, HEXAGON SOCKET HEAD	1	1	1	1		

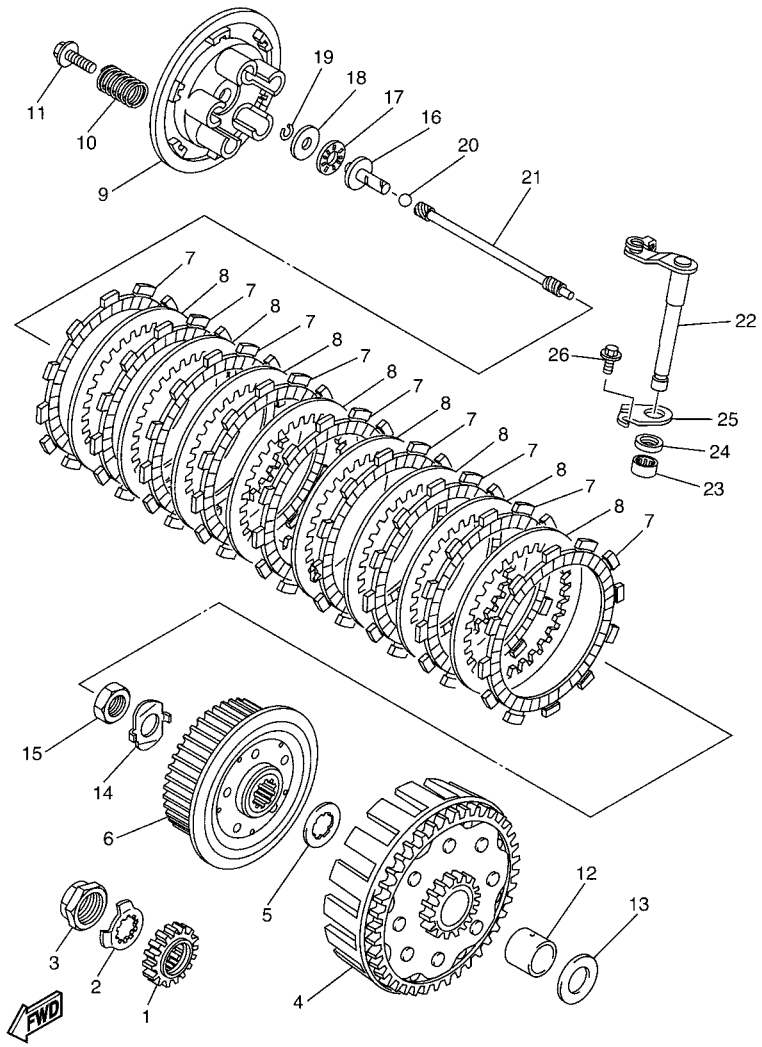

5XCR100-H160

FIG. 15 CLUTCH

REF. NO.	PART NO.	DESCRIPTION	17DD	17DE	17DF	17DG		REMARKS
1	5NL–16111–01	GEAR, PRIMARY DRIVE	1	1	1	1		
2	90215–20003	WASHER, LOCK	1	1	1	1		
3	90179–18001	NUT	1	1	1	1		
4	5XC–16150–10	PRIMARY DRIVEN GEAR COMP.	1	1	1	1		
5	5XC–16154–00	PLATE, THRUST 1	1	1	1	1		
6	5NL–16371–31	BOSS, CLUTCH	1	1	1	1		
7	5XC–16321–00	PLATE, FRICTION	9	9	9	9		
8	5NL–16325–00	PLATE, CLUTCH 2	8	8	8	8		
9	5HD–16351–00	PLATE, PRESSURE 1	1	1	1	1		
10	90501–230A2	SPRING, COMPRESSION	5	5	5	5		
11	90159–06092	SCREW, WITH WASHER	5	5	5	5		
12	5XC–16181–00	SPACER 1	1	1	1	1		
13	90201–22013	WASHER, PLATE	1	1	1	1		
14	90215–16289	WASHER, LOCK	1	1	1	1		
15	90170–16326	NUT	1	1	1	1		
16	5XC–16356–00	ROD, PUSH 1	1	1	1	1		
17	93340–21008	BEARING	1	1	1	1		
18	90201–080H1	WASHER, PLATE	1	1	1	1		
19	93440–07182	CIRCLIP	1	1	1	1		
20	93511–32027	BALL	1	1	1	1		
21	5NL–16357–10	ROD, PUSH 2	1	1	1	1		
22	5XC–16381–10	PUSH LEVER COMP.	1	1	1	1		
23	93317–11287	BEARING	1	1	1	1		
24	93102–12224	OIL SEAL	1	1	1	1		
25	4JT–16384–00	PLATE, SEAT	1	1	1	1		
26	95022–06010	BOLT, FLANGE	1	1	1	1		

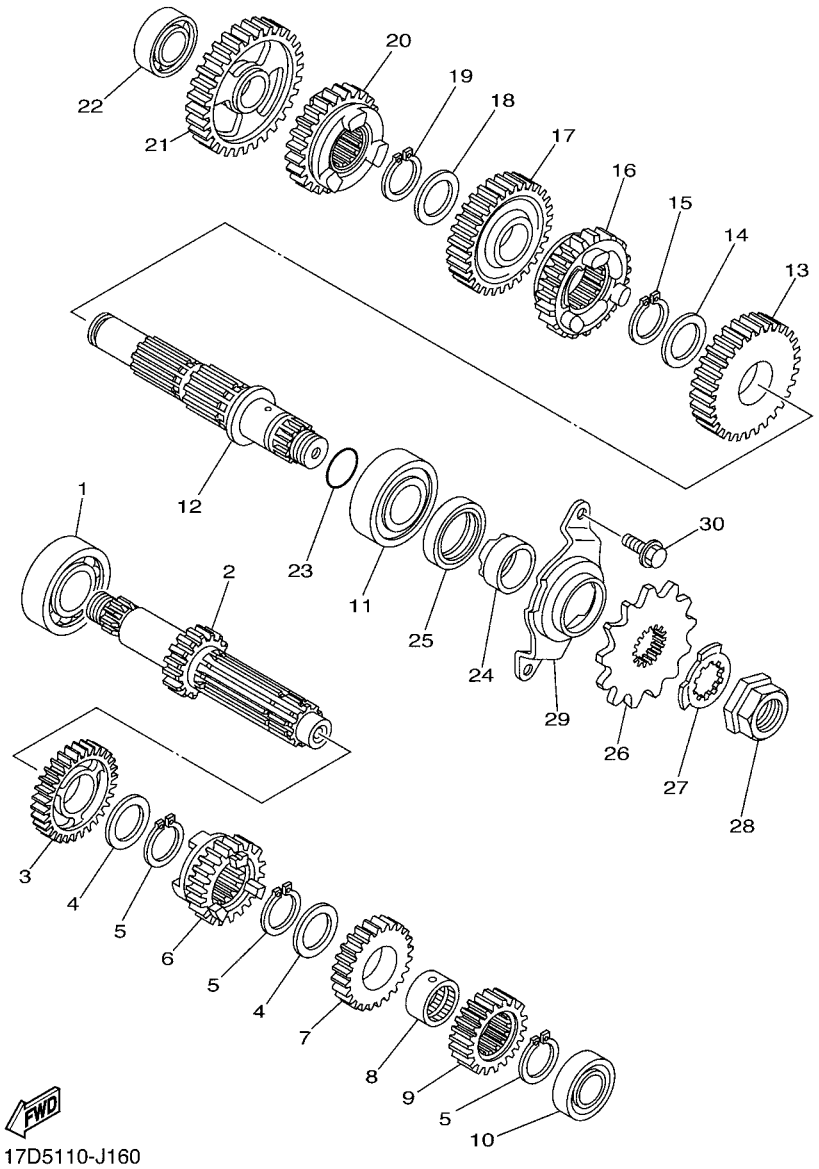

FIG. 16 TRANSMISSION

REF. NO.	PART NO.	DESCRIPTION	17DD	17DE	17DF	17DG		REMARKS
1	93306–20447	BEARING	1	1	1	1		
2	5XC–17411–00	AXLE,MAIN (14T)	1	1	1	1		
3	17D–17151–10	GEAR, 5TH PINION (24T)	1	1	1	1		
4	90209–20008	WASHER	2	2	2	2		
5	93410–22039	CIRCLIP	3	3	3	3		
6	17D–17131–10	GEAR, 3RD PINION (18T)	1	1	1	1		
7	17D–17141–10	GEAR, 4TH PINION (18T)	1	1	1	1		
8	90387–20006	COLLAR	1	1	1	1		
9	5NL–17121–00	GEAR, 2ND PINION (16T)	1	1	1	1		
10	93306–00320	BEARING	1	1	1	1		
11	93306–27208	BEARING	1	1	1	1		
12	5NL–17402–01	DRIVE AXLE ASSY	1	1	1	1		
13	5NL–17221–00	GEAR, 2ND WHEEL (28T)	1	1	1	1		
14	90209–23012	WASHER	1	1	1	1		
15	93410–26067	CIRCLIP	1	1	1	1		
16	17D–17241–10	GEAR, 4TH WHEEL (22T)	1	1	1	1		
17	17D–17231–10	GEAR, 3RD WHEEL (26T)	1	1	1	1		
18	90209–20008	WASHER	1	1	1	1		
19	93410–22039	CIRCLIP	1	1	1	1		
20	17D–17251–10	GEAR, 5TH WHEEL (25T)	1	1	1	1		
21	5NL–17211–10	GEAR, 1ST WHEEL (30T)	1	1	1	1		
22	93306–00317	BEARING	1	1	1	1		
23	93210–196A4	O-RING	1	1	1	1		
24	90387–22001	COLLAR	1	1	1	1		
25	93102–28010	OIL SEAL	1	1	1	1		
26	9383B–13218	SPROCKET, DRIVE (13T)	1	1	1	1		
27	90215–20003	WASHER, LOCK	1	1	1	1		

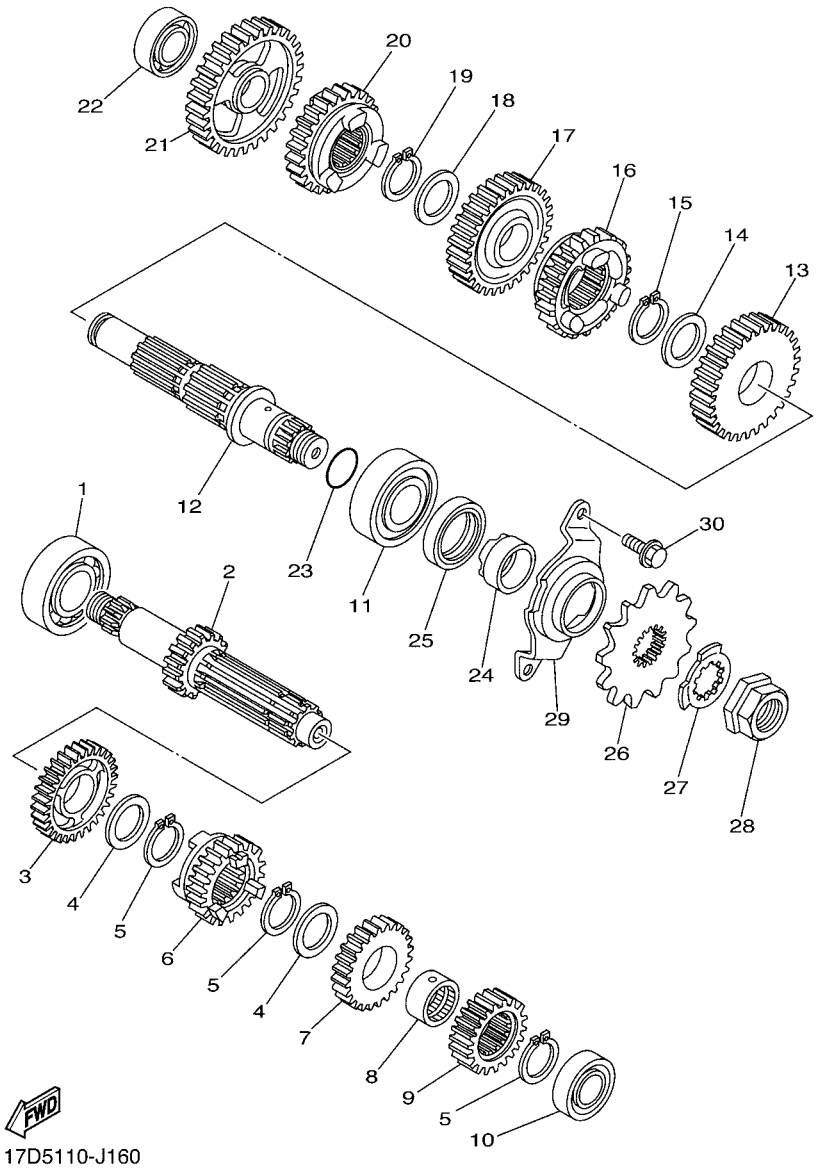

FIG. 16 TRANSMISSION

REF. NO.	PART NO.	DESCRIPTION	17DD	17DE	17DF	17DG		REMARKS
28	90179–18001	NUT	1	1	1	1		
29	5NL–17471–10	PLATE, COVER	1	1	1	1		
30	90105–06081	BOLT, FLANGE	2	2	2	2		

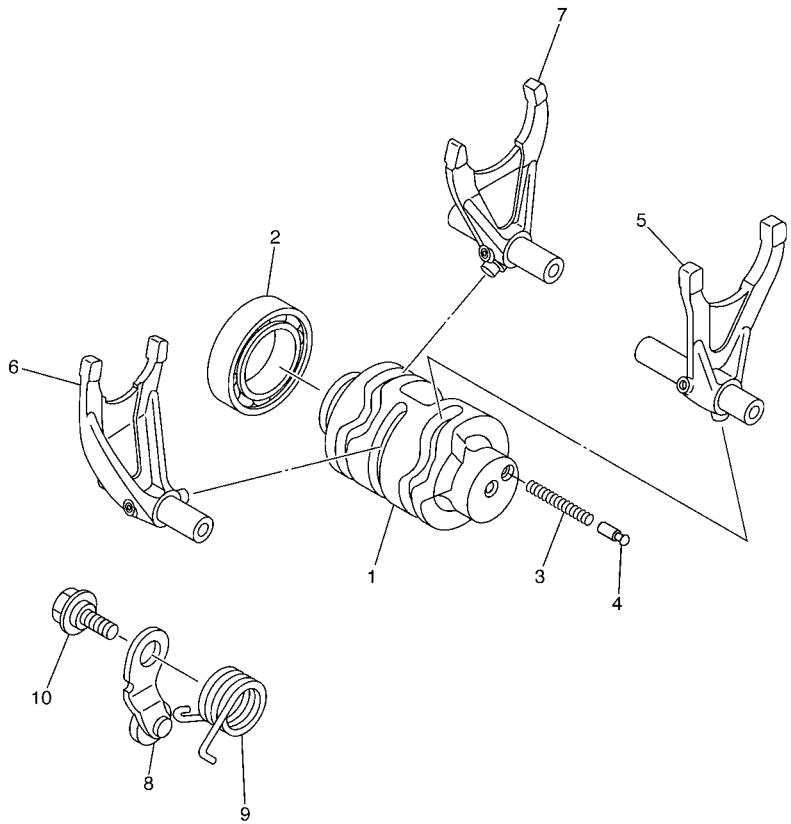

5XC9100-E170

FIG. 17 SHIFT CAM & FORK

REF. NO.	PART NO.	DESCRIPTION	17DD	17DE	17DF	17DG		REMARKS
1	5NL–18541–00	CAM, SHIFT	1	1	1	1		
2	93306–90509	BEARING	1	1	1	1		
3	90501–06022	SPRING, COMPRESSION	1	1	1	1		
4	4UN–18542–00	POINT, NEUTRAL	1	1	1	1		
5	5NL–18501–00	FORK, SHIFT 1	1	1	1	1		
6	5NL–18502–00	FORK, SHIFT 2	1	1	1	1		
7	5NL–18503–00	FORK, SHIFT 3	1	1	1	1		
8	3XK–18140–00	STOPPER LEVER ASSY	1	1	1	1		
9	90508–26561	SPRING, TORSION	1	1	1	1		
10	90109–06193	BOLT	1	1	1	1		

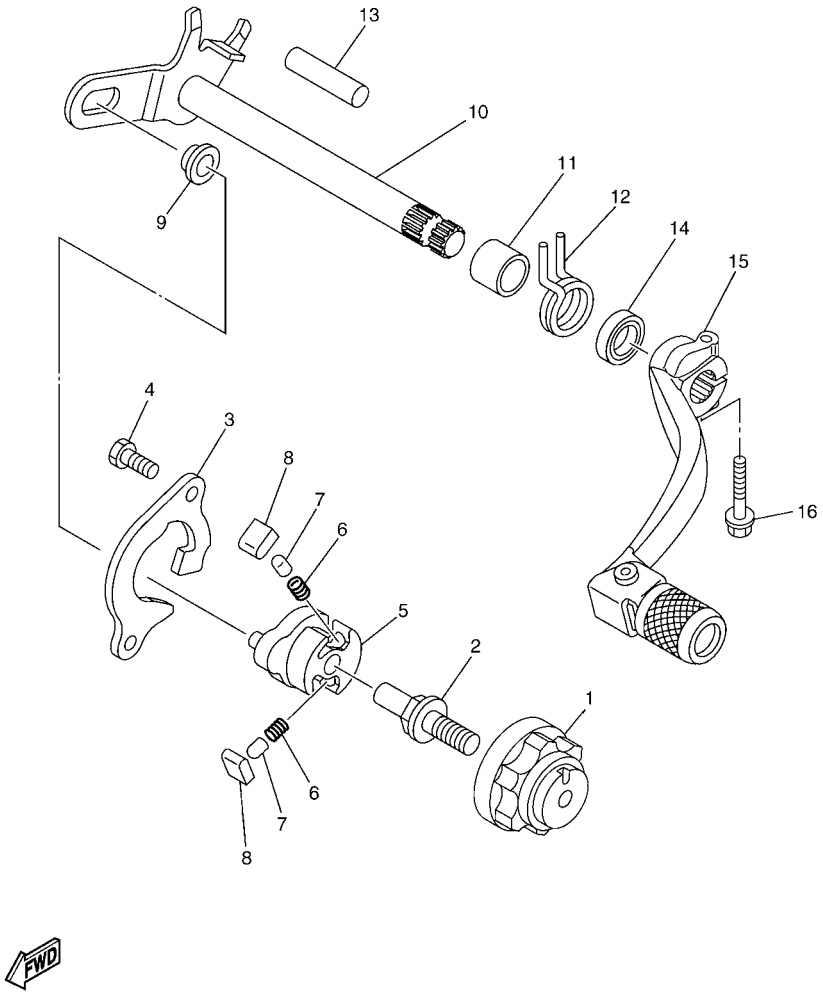

5XCG100-F180

FIG. 18 SHIFT SHAFT

REF. NO.	PART NO.	DESCRIPTION	17DD	17DE	17DF	17DG		REMARKS
1	2S2–18185–00	SEGMENT	1	1	1	1		
2	3XJ–18173–10	PIN, SHIFT	1	1	1	1		
3	5BE–18172–00	GUIDE, SHIFT	1	1	1	1		
4	90101–06041	BOLT	2	2	2	2		
5	5LP–18122–01	LEVER, SHIFT 2	1	1	1	1		
6	90501–052G5	SPRING, COMPRESSION	2	2	2	2		
7	3XJ–18184–00	PIN, PAWL	2	2	2	2		
8	3XJ–18182–00	PAWL, SHIFTER	2	2	2	2		
9	3XJ–18178–00	ROLLER, SHIFT LEVER	1	1	1	1		
10	5UL–18101–20	SHIFT SHAFT ASSY	1	1	1	1		
11	90387–124F4	COLLAR	1	1	1	1		
12	90508–291A8	SPRING, TORSION	1	1	1	1		
13	93608–33002	PIN, DOWEL	1	1	1	1		
14	93102–12224	OIL SEAL	1	1	1	1		
15	5XC–18110–10	SHIFT PEDAL ASSY	1	1	1	1		
16	90105–06127	BOLT, FLANGE	1	1	1	1		

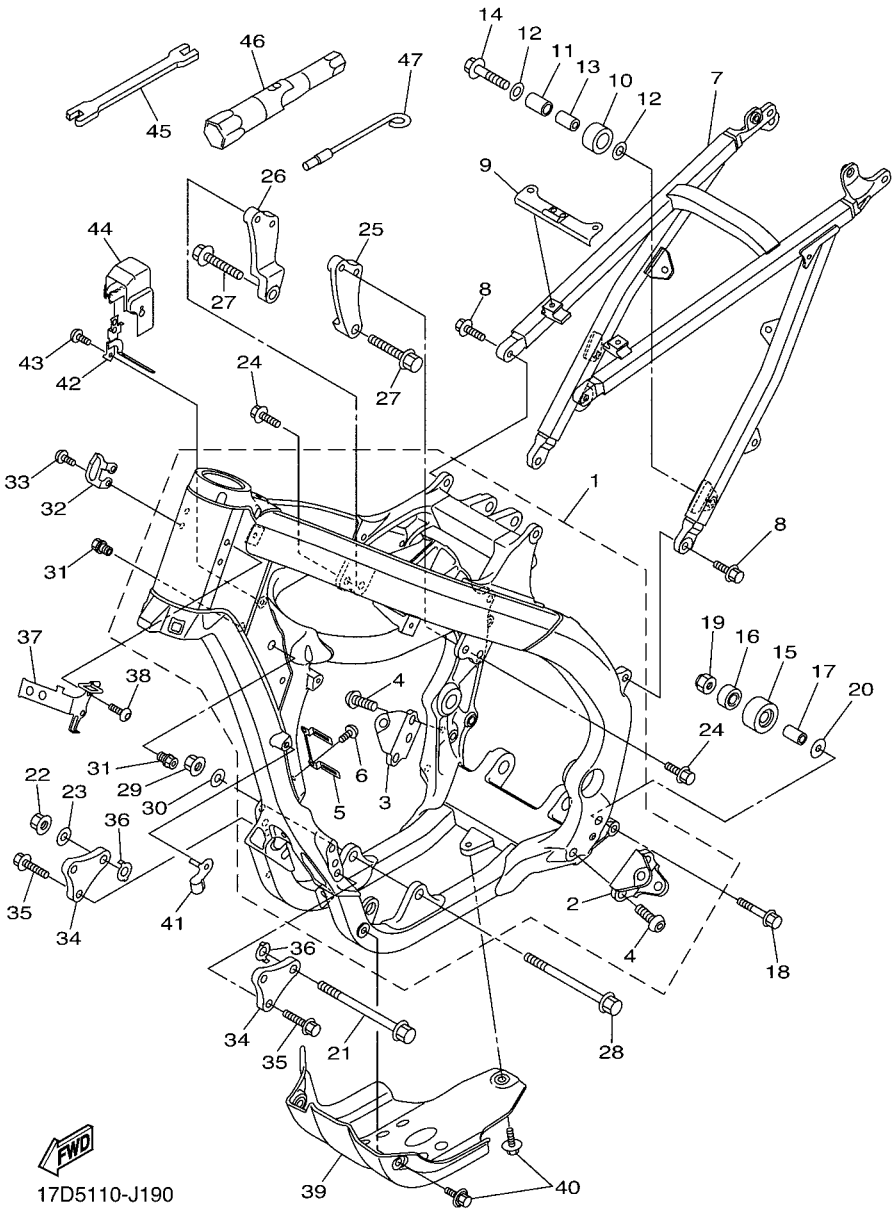

FIG. 19 FRAME

REF. NO.	PART NO.	DESCRIPTION	17DD	17DE	17DF	17DG		REMARKS
1	17D–21101–50	FRONT FRAME COMP.	1	1	1	1		
2	17D–21447–00	.BRACKET, FOOTREST	1	1	1	1		
3	17D–21448–00	.BRACKET, FOOTREST	1	1	1	1		
4	90149–10031	.SCREW	4	4	4	4		
5	17D–21335–50	.CLAMP, WIRE HARNESS 1	1	1	1	1		
6	92012–05008	.BOLT, BUTTON HEAD	2	2	2	2		
7	17D–21190–00	REAR FRAME COMP.	1	1	1	1		
8	90105–08224	BOLT, FLANGE	4	4	4	4		
9	17D–21131–00	BRACKET	1	1	1	1		
10	30X–22178–00	TENSIONER	1	1	1	1		
11	4V4–22184–00	BUSH	1	1	1	1		
12	90201–08045	WASHER, PLATE	2	2	2	2		
13	90387–08041	COLLAR	1	1	1	1		
14	95022–08040	BOLT, FLANGE	1	1	1	1		
15	3JD–22178–20	TENSIONER	1	1	1	1		
16	93300–60839	BEARING	1	1	1	1		
17	90387–086N4	COLLAR	1	1	1	1		
18	90105–08232	BOLT, FLANGE	1	1	1	1		
19	90185–08009	NUT, SELF-LOCKING	1	1	1	1		
20	90201–08043	WASHER, PLATE	1	1	1	1		
21	90105–10361	BOLT, FLANGE	1	1	1	1		
22	90179–10658	NUT	1	1	1	1		
23	90201–10045	WASHER, PLATE	1	1	1	1		
24	90105–08226	BOLT, FLANGE	4	4	4	4		
25	17D–21425–50	BRACKET, REAR UPPER 1	1	1	1	1		
26	17D–21426–50	BRACKET, REAR UPPER 2	1	1	1	1		
27	90105–10373	BOLT, FLANGE	2	2	2	2		

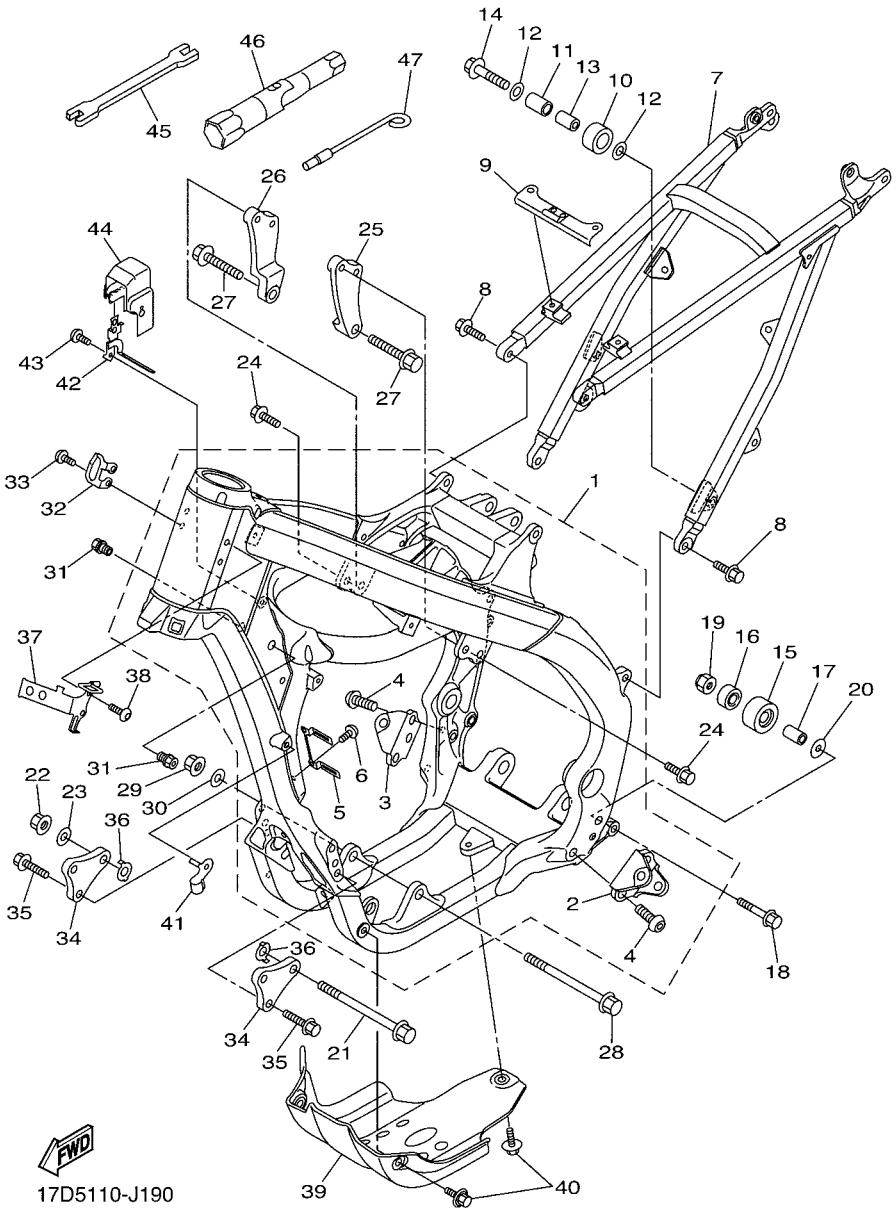

FIG. 19 FRAME

REF. NO.	PART NO.	DESCRIPTION	17DD	17DE	17DF	17DG		REMARKS
28	90105–10176	BOLT, FLANGE	1	1	1	1		
29	90179–10658	NUT	1	1	1	1		
30	90201–10045	WASHER, PLATE	1	1	1	1		
31	17D–21244–10	NUT	2	2	2	2		
32	17D–21163–50	HOLDER, CLUTCH CABLE	1	1	1	1		
33	92012–06010	BOLT, BUTTON HEAD	2	2	2	2		
34	17D–21417–50	BRACKET, FRONT LOWER 1	2	2	2	2		
35	90105–08143	BOLT, FLANGE	4	4	4	4		
36	5XC–21456–90	PLATE, PATCH	2	2	2	2		
37	17D–21274–50	BRACKET, C.D.I. UNIT	1	1	1	1		
38	92012–06010	BOLT, BUTTON HEAD	2	2	2	2		
39	17D–2147E–50	GUARD, ENGINE 2	1	1	1	1		
40	90119–06149	BOLT, WITH WASHER	3	3	3	3		
41	17D–21164–50	HOLDER, CABLE	1	1	1	1		
42	17D–23591–50	BRACKET 1	1	1	1	1		
43	92012–05008	BOLT, BUTTON HEAD	1	1	1	1		
44	17D–2117F–50	COVER	1	1	1	1		
45	5ET–28166–10	WRENCH, HEXAGON	1	1	1	1		
46	5TA–2814F–00	BOX, SPARK PLUG	1	1	1	1		
47	5XC–28116–00	TOOL, SPECIAL	1	1	1	1		

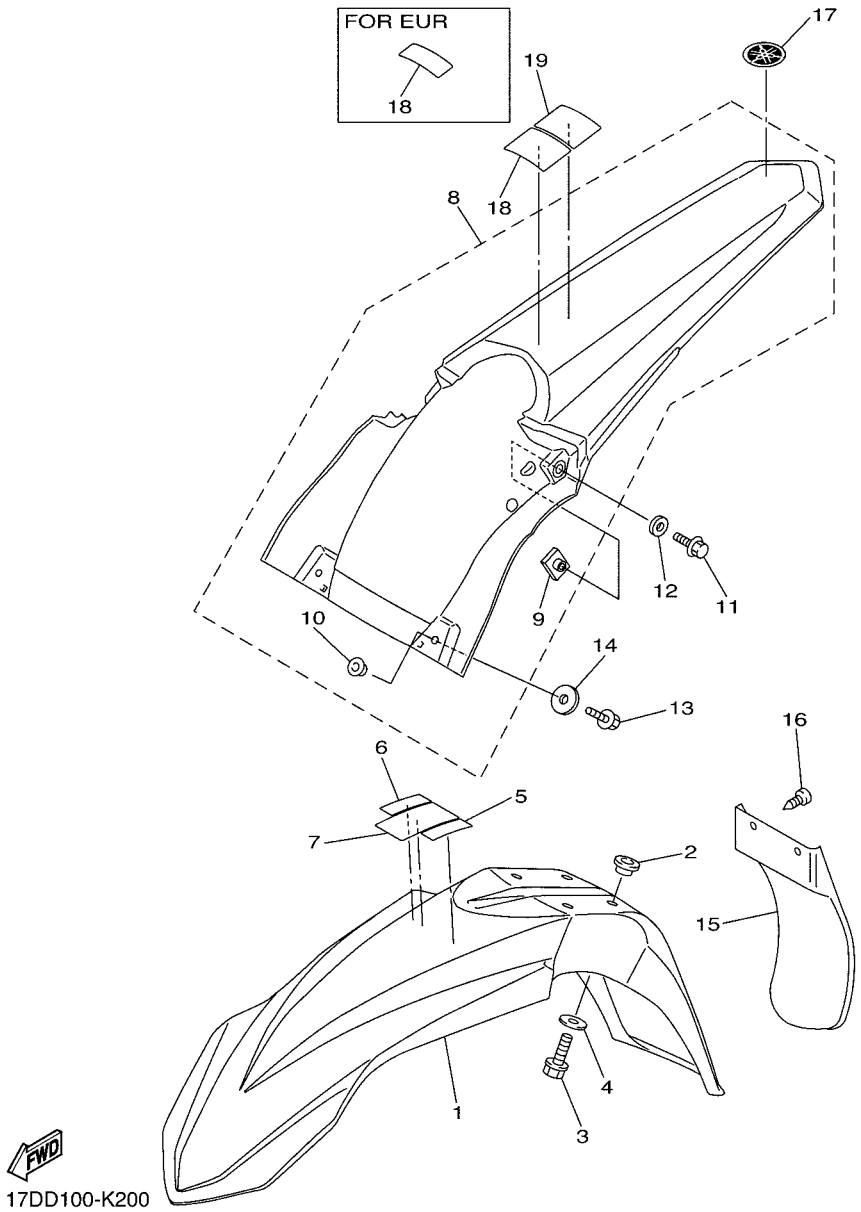

FIG. 20 FENDER

REF. NO.	PART NO.	DESCRIPTION	17DD	17DE	17DF	17DG		REMARKS
1	17D–21511–50	FENDER, FRONT	1	1	1	1		UR FOR DPBSE
	17D–21511–60	FENDER, FRONT	1	1	1	1		UR FOR YB
2	90387–06259	COLLAR	4	4	4	4		
3	90105–06127	BOLT, FLANGE	4	4	4	4		
4	90201–06108	WASHER, PLATE	4	4	4	4		
5	3FB–2415E–02	LABEL, CAUTION	1					
	3FB–2415E–C1	LABEL, CAUTION			1			JAPANESE
6	3FB–2415E–12	LABEL, CAUTION	1					
7	4SR–2416E–00	LABEL, CAUTION CANADA	1					
8	17D–21610–00	REAR FENDER COMP.	1	1	1	1		UR FOR DPBSE
	17D–21610–D0	REAR FENDER COMP.	1	1	1	1		UR FOR YB
9	5XE–21635–10	.NUT, REAR FENDER	2	2	2	2		
10	90387–064X4	.COLLAR	2	2	2	2		
11	90105–06100	BOLT, FLANGE	2	2	2	2		
12	90201–06104	WASHER, PLATE	2	2	2	2		
13	90105–06106	BOLT, FLANGE	2	2	2	2		
14	90201–06085	WASHER, PLATE	2	2	2	2		
15	17D–21642–00	GUARD, FLAP	1	1	1	1		
16	97702–60016	SCREW, TAPPING	2	2	2	2		
17	3C5–2411B–20	EMBLEM	1	1	1	1		
18	5PA–2118K–00	LABEL, CAUTION	1			1		
	5PG–2816R–00	LABEL, WARNING GENERAL INFO.		1				
	5PA–2118K–20	LABEL, CAUTION			1			
19	5PA–2118K–10	LABEL, CAUTION	1					

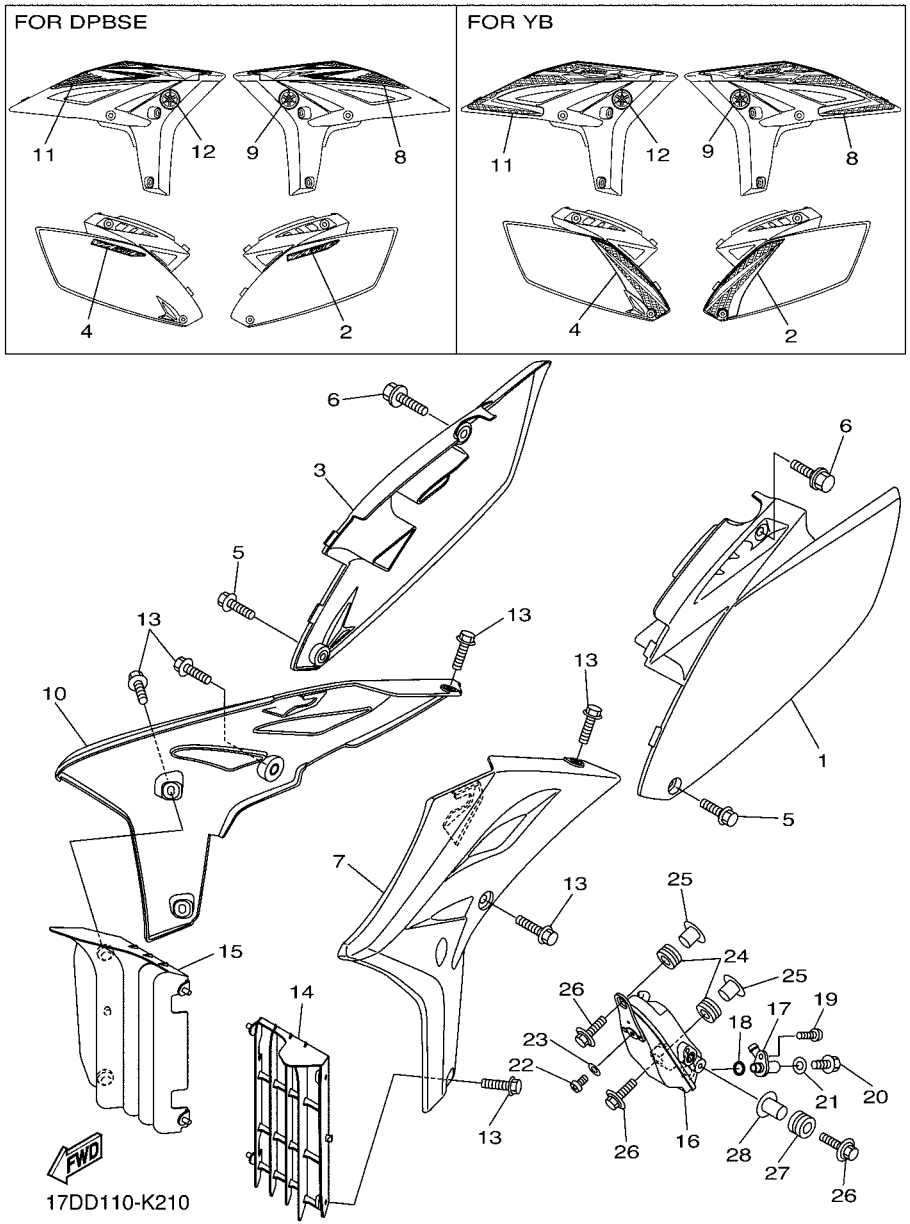

FIG. 21 SIDE COVER & OIL TANK

REF. NO.	PART NO.	DESCRIPTION	17DD	17DE	17DF	17DG		REMARKS
1	17D–21710–00	SIDE COVER ASSY 1	1	1	1	1		
2	5XC–2163G–30	EMBLEM 1	1	1	1	1		UR FOR DPBSE
	17D–2173E–10	GRAPHIC, 1	1	1	1	1		UR FOR YB
3	17D–21720–00	SIDE COVER ASSY 2	1	1	1	1		
4	5XC–2163G–30	EMBLEM 1	1	1	1	1		UR FOR DPBSE
	17D–2173F–10	GRAPHIC, 2	1	1	1	1		UR FOR YB
5	90105–06103	BOLT, FLANGE	2	2	2	2		
6	90119–08095	BOLT, WITH WASHER	2	2	2	2		
7	17D–21730–D0	SIDE COVER ASSY 3	1	1	1	1		UR FOR DPBSE
	17D–21730–E0	SIDE COVER ASSY 3	1	1	1	1		UR FOR YB
8	17D–2174G–10	GRAPHIC, 3	1	1	1	1		UR FOR DPBSE
	17D–2174G–20	GRAPHIC, 3	1	1	1	1		UR FOR YB
9	5FK–2175C–00	TUNING FORK MARK	1	1	1	1		
10	17D–21740–D0	SIDE COVER ASSY 4	1	1	1	1		UR FOR DPBSE
	17D–21740–E0	SIDE COVER ASSY 4	1	1	1	1		UR FOR YB
11	17D–2174H–10	GRAPHIC, 4	1	1	1	1		UR FOR DPBSE
	17D–2174H–20	GRAPHIC, 4	1	1	1	1		UR FOR YB
12	5FK–2175C–00	TUNING FORK MARK	1	1	1	1		
13	90105–06064	BOLT, FLANGE	8	8	8	8		
14	17D–2172A–00	PANEL 1	1	1	1	1		
15	17D–2172A–10	PANEL 1	1	1	1	1		
16	17D–21751–00	TANK, OIL	1	1	1	1		
17	17D–13416–00	PIPE, OIL 1	1	1	1	1		
18	93210–14369	O-RING	1	1	1	1		
19	92012–06016	BOLT, BUTTON HEAD	1	1	1	1		
20	90105–08151	BOLT, FLANGE	1	1	1	1		
21	90201–082A6	WASHER, PLATE	1	1	1	1		

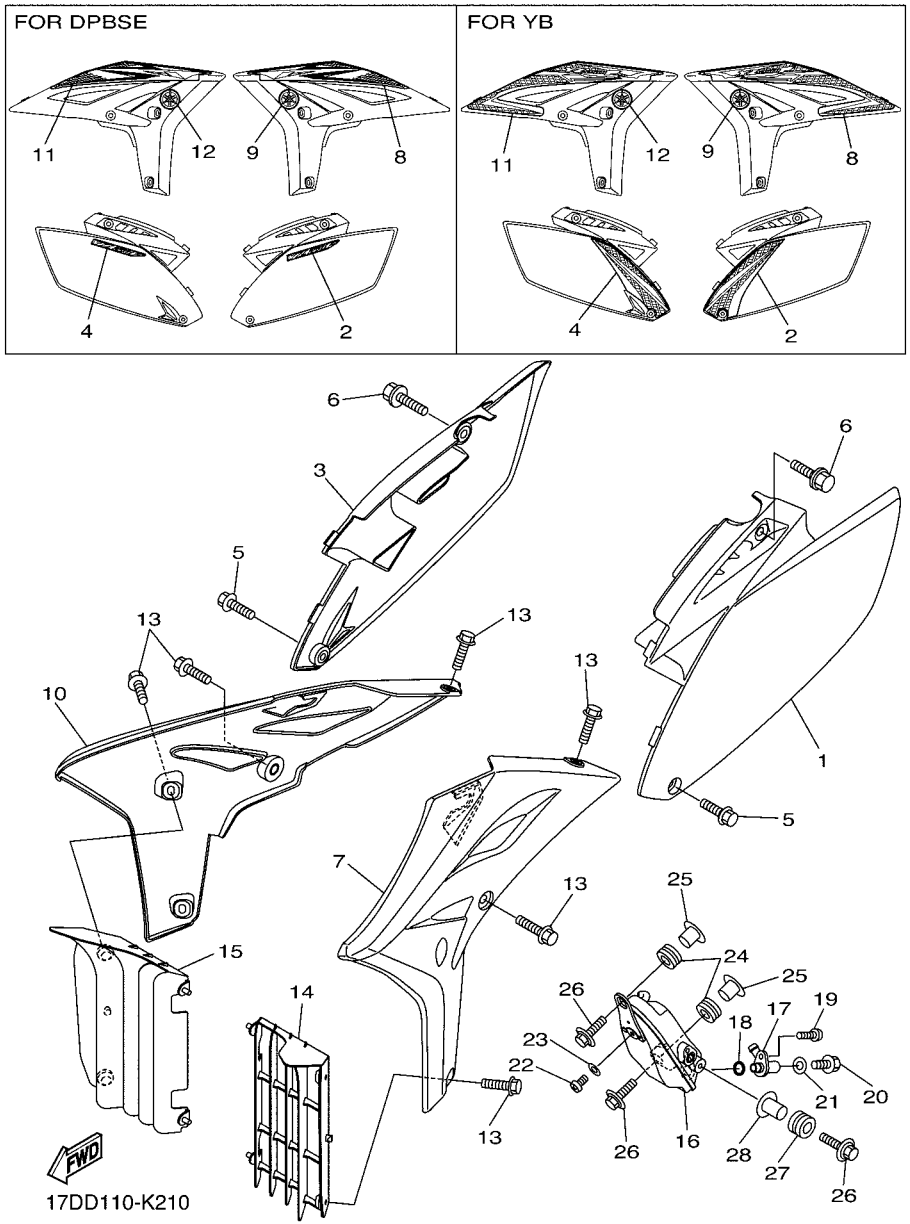

FIG. 21 SIDE COVER & OIL TANK

REF. NO.	PART NO.	DESCRIPTION	17DD	17DE	17DF	17DG		REMARKS
22	98902–06012	SCREW, BIND	1	1	1	1		
23	90201–06630	WASHER, PLATE	1	1	1	1		
24	90480–10289	GROMMET	2	2	2	2		
25	90387–06150	COLLAR	2	2	2	2		
26	90119–06255	BOLT, WITH WASHER	3	3	3	3		
27	90480–14433	GROMMET	1	1	1	1		
28	90387–06161	COLLAR	1	1	1	1		

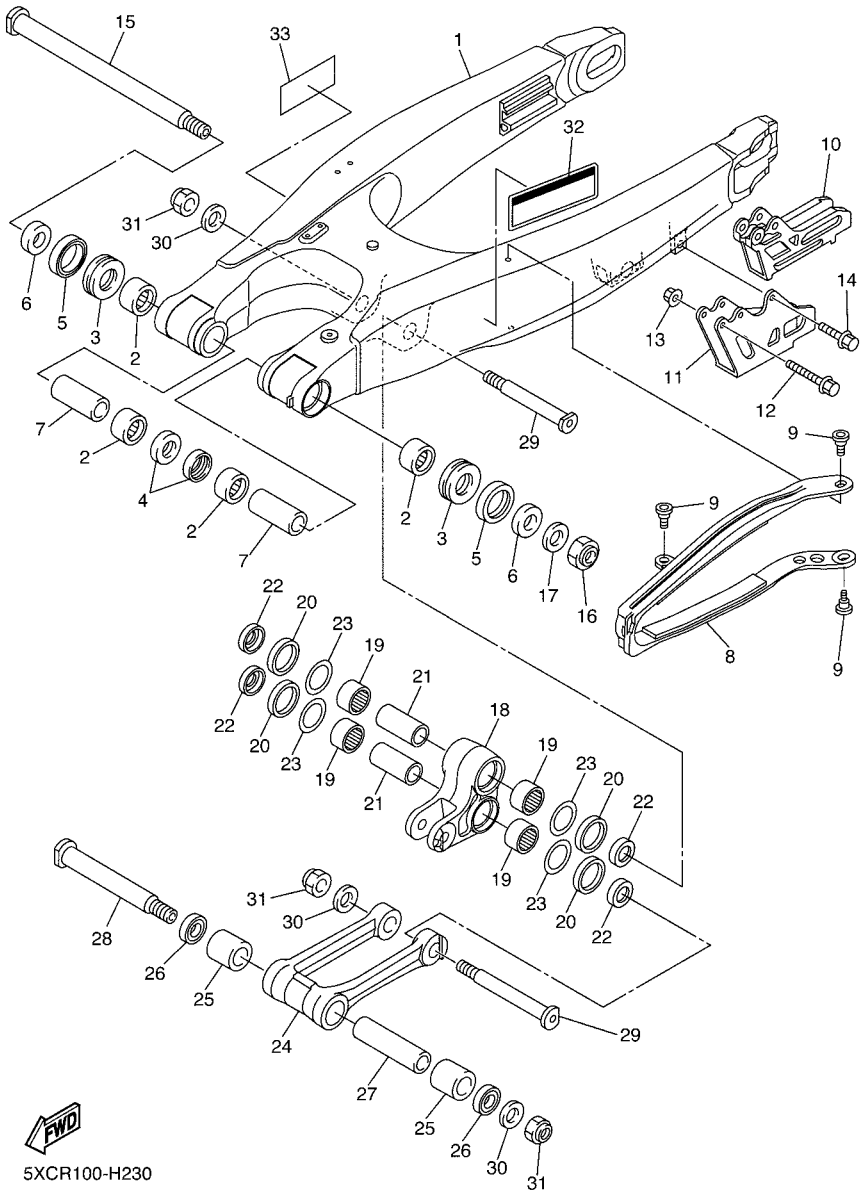

FIG. 22 REAR ARM

REF. NO.	PART NO.	DESCRIPTION	17DD	17DE	17DF	17DG		REMARKS
1	17D–22110–00	REAR ARM COMP.	1	1	1	1		
2	93317–22262	BEARING	4	4	4	4		
3	93342–22217	BEARING	2	2	2	2		
4	93106–22002	OIL SEAL	2	2	2	2		
5	93109–28043	OIL SEAL	2	2	2	2		
6	90387–18012	COLLAR	2	2	2	2		
7	90387–18004	COLLAR	2	2	2	2		
8	34P–22151–01	SEAL, GUARD	1	1	1	1		
9	1C3–22969–90	SCREW, 1	3	3	3	3		
10	2S2–22199–70	SUPPORT, CHAIN	1	1	1	1		
11	2S2–22128–70	COVER, THRUST 1	1	1	1	1		
12	90105–06104	BOLT, FLANGE	2	2	2	2		
13	90179–06028	NUT	2	2	2	2		
14	90105–06105	BOLT, FLANGE	1	1	1	1		
15	17D–22141–50	SHAFT, PIVOT	1	1	1	1		
16	90185–16002	NUT, SELF-LOCKING	1	1	1	1		
17	90201–16018	WASHER, PLATE	1	1	1	1		
18	17D–2217A–00	ARM, RELAY	1	1	1	1		
19	93315–32166	BEARING	4	4	4	4		
20	93109–25001	OIL SEAL	4	4	4	4		
21	90387–16026	COLLAR	2	2	2	2		
22	90209–16011	WASHER	4	4	4	4		
23	90201–21014	WASHER, PLATE	4	4	4	4		
24	17D–2217F–50	ROD, CONNECTING 1	1	1	1	1		
25	93315–32269	BEARING	2	2	2	2		
26	93109–22019	OIL SEAL	2	2	2	2		
27	90387–14009	COLLAR	1	1	1	1		

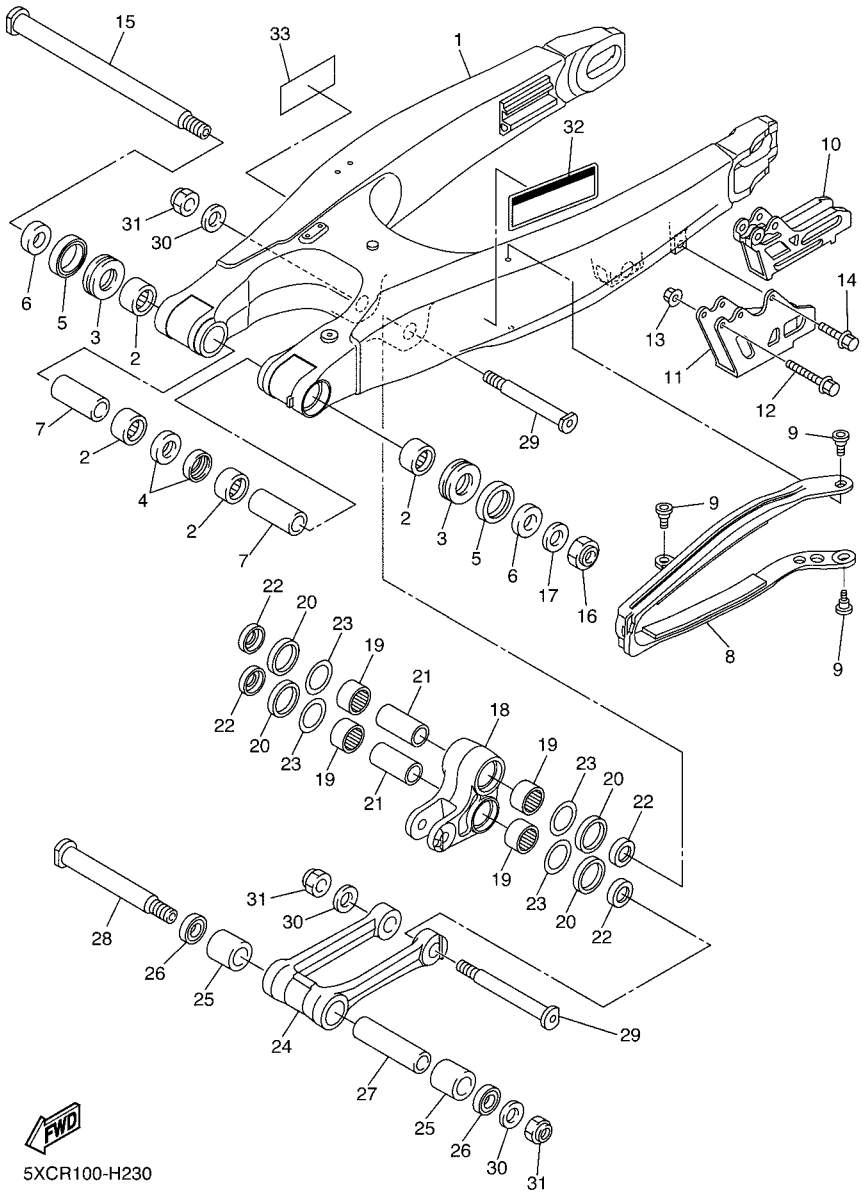

FIG. 22 REAR ARM

REF. NO.	PART NO.	DESCRIPTION	17DD	17DE	17DF	17DG		REMARKS
28	5XC–22121–91	SHAFT 1	1	1	1	1		
29	34P–22122–00	SHAFT 2	2	2	2	2		
30	90201–14020	WASHER, PLATE	3	3	3	3		
31	90185–14010	NUT, SELF-LOCKING	3	3	3	3		
32	3RV–21668–A0	LABEL, TIRE	1			1		
33	3RV–21668–B0	LABEL, TIRE	1					

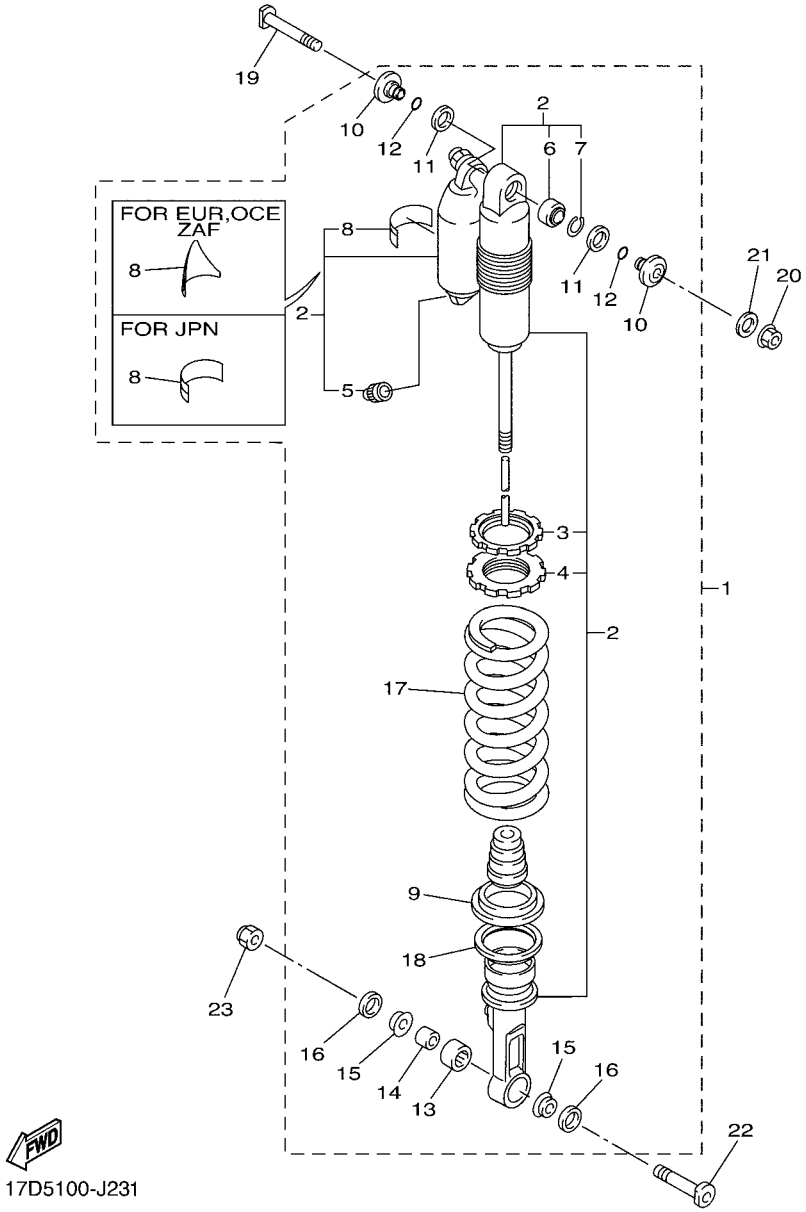

FIG. 23 REAR SUSPENSION

REF. NO.	PART NO.	DESCRIPTION	17DD	17DE	17DF	17DG		REMARKS
1	17D–22200–30	SHOCK ABSORBER ASSY, REAR	1					UR FOR DPBSE
	17D–22200–70	SHOCK ABSORBER ASSY, REAR	1					UR FOR YB
	17D–22200–10	SHOCK ABSORBER ASSY, REAR		1		1		UR FOR DPBSE
	17D–22200–50	SHOCK ABSORBER ASSY, REAR		1		1		UR FOR YB
	17D–22200–20	SHOCK ABSORBER ASSY, REAR			1			UR FOR DPBSE
	17D–22200–60	SHOCK ABSORBER ASSY, REAR			1			UR FOR YB
2	17D–22201–30	.DAMPER SUB ASSY	1					
	17D–22201–10	.DAMPER SUB ASSY		1		1		
	17D–22201–20	.DAMPER SUB ASSY			1			
3	3SP–22234–00	..GUIDE, SPRING 3	1	1	1	1		
4	1C3–22213–L0	..SEAT, SPRING UPPER	1	1	1	1		
5	509–23184–L0	..CAP, AIR VALVE	1	1	1	1		
6	4JX–22226–00	..BUSH, SHOCK ABSORBER LOWER	1	1	1	1		
7	5DH–23183–00	..CIRCLIP	1	1	1	1		
8	4AA–22259–70	..LABEL, WARNING	1					
	4AA–22259–40	..LABEL, WARNING		1		1		
	4AA–22259–50	..LABEL, WARNING			1			
9	5MV–22224–00	.GUIDE, SPRING 2	1	1	1	1		
10	1C3–22253–50	.COLLAR, DISTANCE	2	2	2	2		
11	3JE–22475–00	.SEAL, DUST	2	2	2	2		
12	4EW–22474–00	.SEAL, RING	2	2	2	2		
13	5UN–22176–00	.BEARING	1	1	1	1		
14	5MV–22184–00	.BUSH	1	1	1	1		
15	1C3–22253–L1	.COLLAR, DISTANCE	2	2	2	2		
16	5NY–22475–00	.SEAL, DUST	2	2	2	2		
17	5UN–22212–L0	.SPRING (K=52N/MM)	1	1	1	1		UR FOR DPBSE
	5UN–22212–K0	.SPRING (K=52N/MM)	1	1	1	1		UR FOR YB

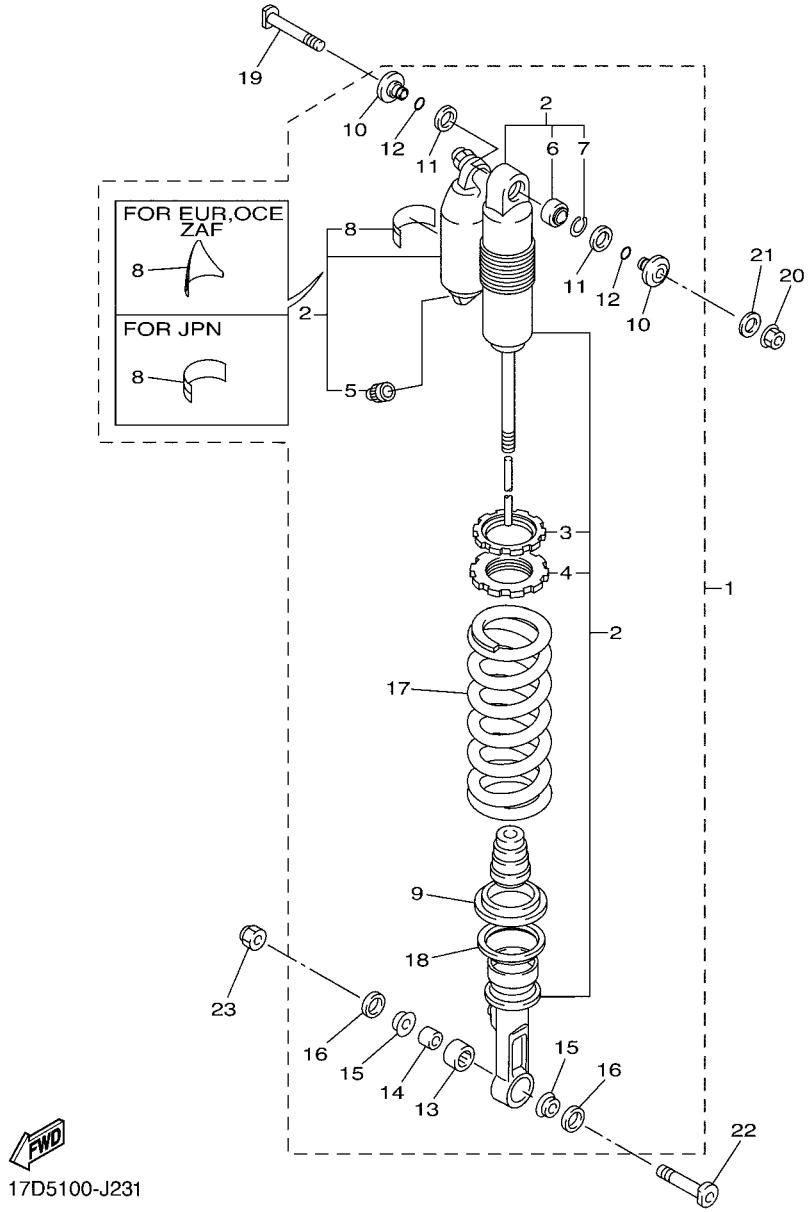

FIG. 23 REAR SUSPENSION

REF. NO.	PART NO.	DESCRIPTION	17DD	17DE	17DF	17DG		REMARKS
18	17D–22214–00	.GUIDE, SPRING 1	1	1	1	1		
19	5XE–22242–00	BOLT 2	1	1	1	1		
20	95602–10200	NUT, U FLANGE	1	1	1	1		
21	92902–10200	WASHER	1	1	1	1		
22	5NY–22241–00	BOLT 1	1	1	1	1		
23	90185–10012	NUT, SELF-LOCKING	1	1	1	1		

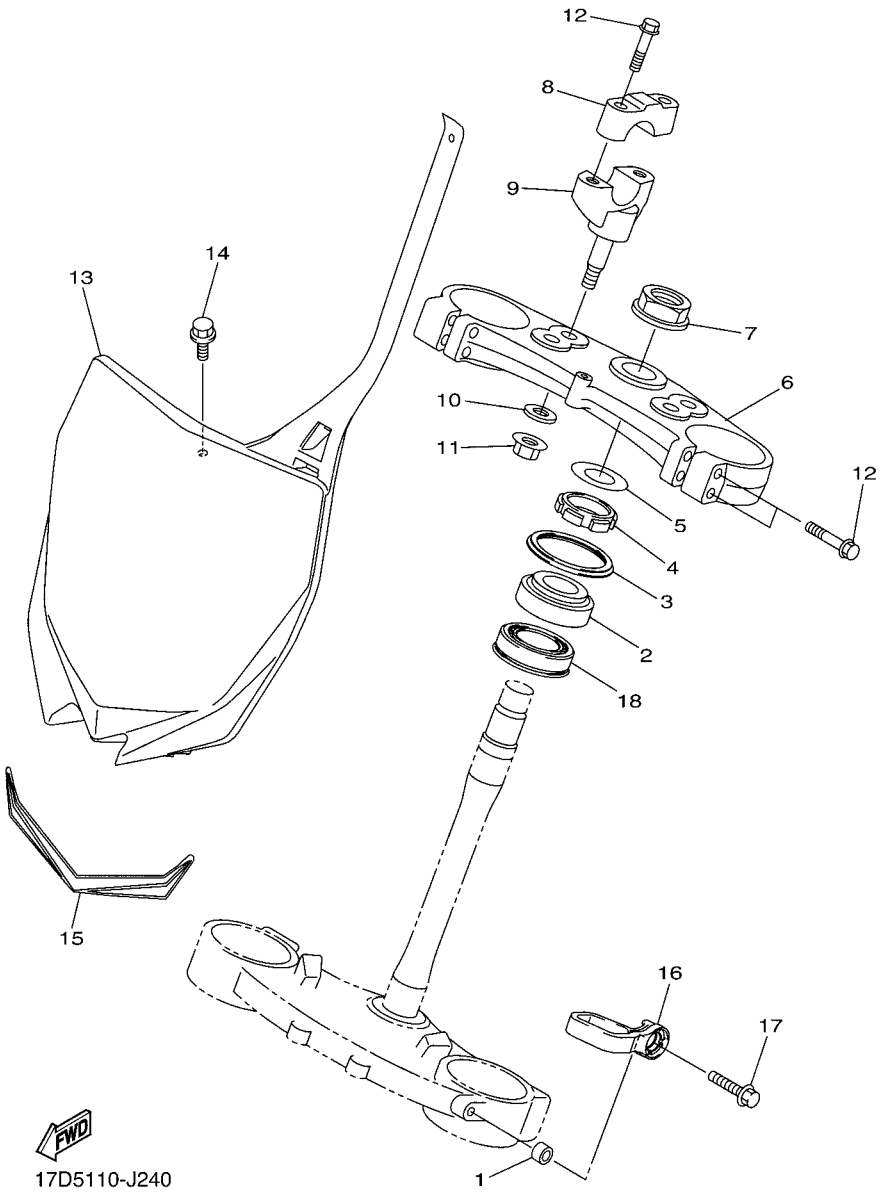

FIG. 24 STEERING

REF. NO.	PART NO.	DESCRIPTION	17DD	17DE	17DF	17DG		REMARKS
1	90387–06105	COLLAR	1	1	1	1		
2	93332–00068	BEARING	1	1	1	1		
3	17D–23416–50	COVER, BALL RACE 2	1	1	1	1		
4	90179–28015	NUT	1	1	1	1		
5	90201–286K9	WASHER, PLATE (T1.0)	1	1	1	1		
6	17D–23435–10	CROWN, HANDLE	1	1	1	1		
7	90179–24004	NUT	1	1	1	1		
8	18P–23441–00	HOLDER, HANDLE UPPER	2	2	2	2		
9	17D–23442–00	HOLDER, HANDLE LOWER	2	2	2	2		
10	92902–10200	WASHER	2	2	2	2		
11	95602–10200	NUT, U FLANGE	2	2	2	2		
12	90105–08154	BOLT, FLANGE	8	8	8	8		
13	17D–23485–50	PLATE, NUMBER	1	1	1	1		
14	90105–06064	BOLT, FLANGE	1	1	1	1		
15	17D–2339E–10	GRAPHIC 1	1	1	1	1		FOR YB
16	17D–23389–50	GUIDE, CABLE	1	1	1	1		
17	90105–06170	BOLT, FLANGE	1	1	1	1		
18	93332–00081	BEARING	1	1	1	1		

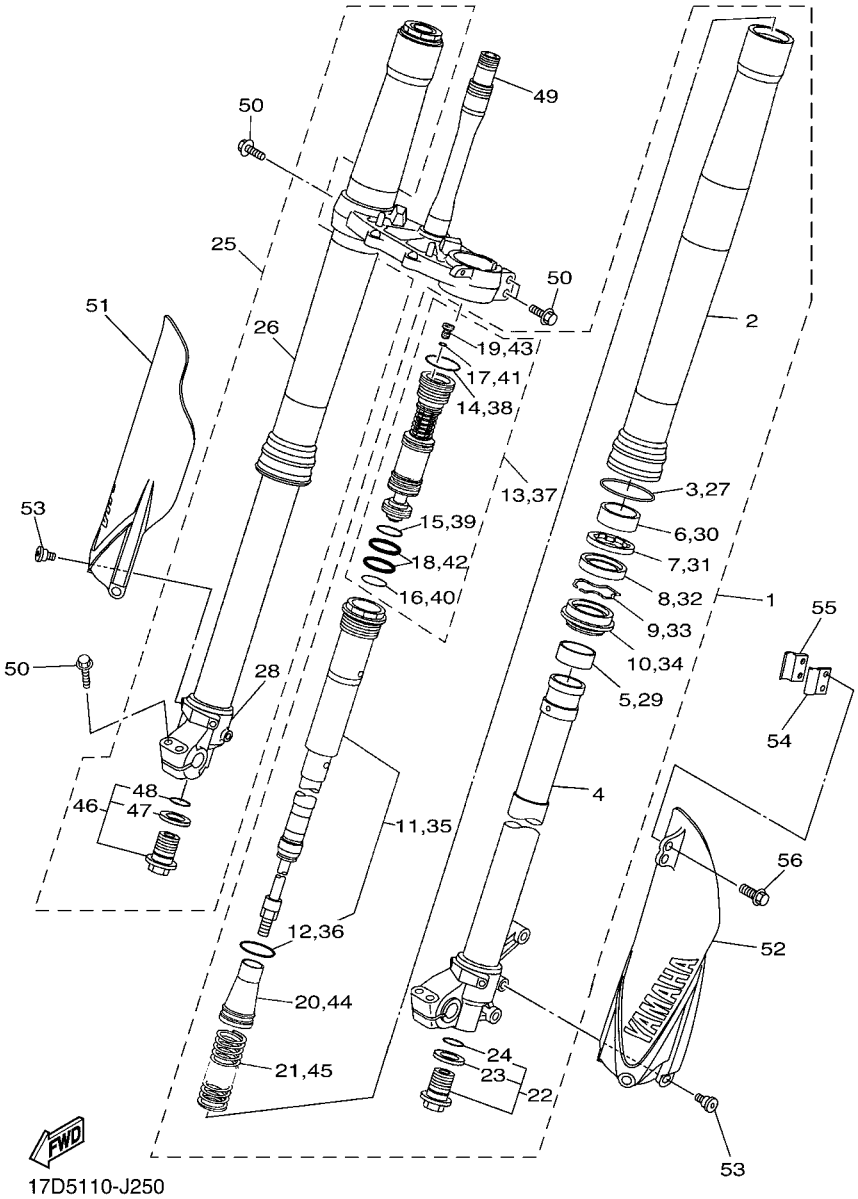

FIG. 25 FRONT FORK

REF. NO.	PART NO.	DESCRIPTION	17DD	17DE	17DF	17DG		REMARKS
1	17D–23102–00	FRONT FORK ASSY (L.H)	1		1			
	17D–23102–10	FRONT FORK ASSY (L.H)		1		1		
2	17D–23136–00	.TUBE, OUTER	1	1	1	1		
3	17D–23153–00	.RING, SNAP	1	1	1	1		
4	17D–23120–00	.INNER TUBE COMP.2	1	1	1	1		
5	5XE–23171–L0	.PISTON, FRONT FORK	1	1	1	1		
6	5XE–23125–L0	.METAL, SLIDE 1	1	1	1	1		
7	5XC–23146–10	.WASHER, OIL SEAL	1	1	1	1		
8	17D–23145–00	.OIL SEAL	1	1	1	1		
9	5XE–23153–L0	.RING, SNAP	1	1	1	1		
10	5XE–23144–L0	.SEAL, DUST	1	1	1	1		
11	17D–23170–00	.CYLINDER COMP., FRONT FORK	1		1			
	17D–23170–10	.CYLINDER COMP., FRONT FORK		1		1		
12	1C3–23147–L0	..O-RING	1	1	1	1		
13	17D–2316A–00	.VALVE COMP.	1		1			
	17D–2316A–10	.VALVE COMP.		1		1		
14	1C3–23188–L0	..O-RING	1	1	1	1		
15	1C3–23188–N0	..O-RING	1	1	1	1		
16	1C3–23188–P0	..O-RING	1	1	1	1		
17	1C3–23188–R0	..O-RING	1	1	1	1		
18	1AE–23147–00	..O-RING	2	2	2	2		
19	1C3–23190–L0	..AIR VALVE COMP.	1	1	1	1		
20	1C3–23142–L0	.SEAT, SPRING UPPER	1	1	1	1		
21	5XC–23141–N0	.SPRING, FRONT FORK(K=4.4N/MM)	1		1			
	2S2–23141–M1	.SPRING, FRONT FORK(K=4.5N/MM)		1		1		
22	5XC–23111–00	.BOLT, CAP	1	1	1	1		
23	2HH–23158–L0	..GASKET	1	1	1	1		

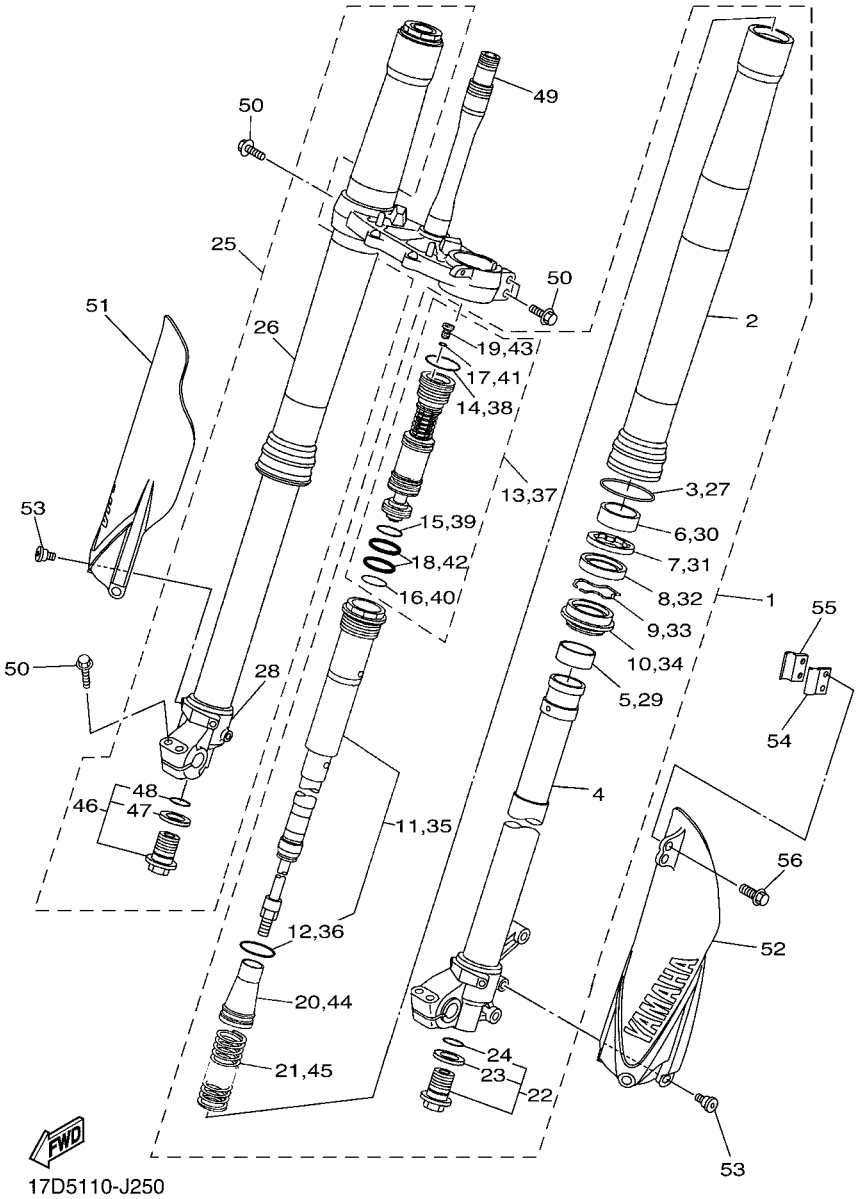

FIG. 25 FRONT FORK

REF. NO.	PART NO.	DESCRIPTION	17DD	17DE	17DF	17DG		REMARKS
24	276–23114–00	..GASKET	1	1	1	1		
25	17D–23103–00	FRONT FORK ASSY (R.H)	1		1			
	17D–23103–10	FRONT FORK ASSY (R.H)		1		1		
26	17D–23136–00	.TUBE, OUTER	1	1	1	1		
27	17D–23153–00	.RING, SNAP	1	1	1	1		
28	17D–23110–00	.INNER TUBE COMP.1	1	1	1	1		
29	5XE–23171–L0	.PISTON, FRONT FORK	1	1	1	1		
30	5XE–23125–L0	.METAL, SLIDE 1	1	1	1	1		
31	5XC–23146–10	.WASHER, OIL SEAL	1	1	1	1		
32	17D–23145–00	.OIL SEAL	1	1	1	1		
33	5XE–23153–L0	.RING, SNAP	1	1	1	1		
34	5XE–23144–L0	.SEAL, DUST	1	1	1	1		
35	17D–23170–00	.CYLINDER COMP., FRONT FORK	1		1			
	17D–23170–10	.CYLINDER COMP., FRONT FORK		1		1		
36	1C3–23147–L0	..O-RING	1	1	1	1		
37	17D–2316A–00	.VALVE COMP.	1		1			
	17D–2316A–10	.VALVE COMP.		1		1		
38	1C3–23188–L0	..O-RING	1	1	1	1		
39	1C3–23188–N0	..O-RING	1	1	1	1		
40	1C3–23188–P0	..O-RING	1	1	1	1		
41	1C3–23188–R0	..O-RING	1	1	1	1		
42	1AE–23147–00	..O-RING	2	2	2	2		
43	1C3–23190–L0	..AIR VALVE COMP.	1	1	1	1		
44	1C3–23142–L0	.SEAT, SPRING UPPER	1	1	1	1		
45	5XC–23141–N0	.SPRING, FRONT FORK(K=4.4N/MM)	1		1			
	2S2–23141–M1	.SPRING, FRONT FORK(K=4.5N/MM)		1		1		
46	5XC–23111–00	.BOLT, CAP	1	1	1	1		

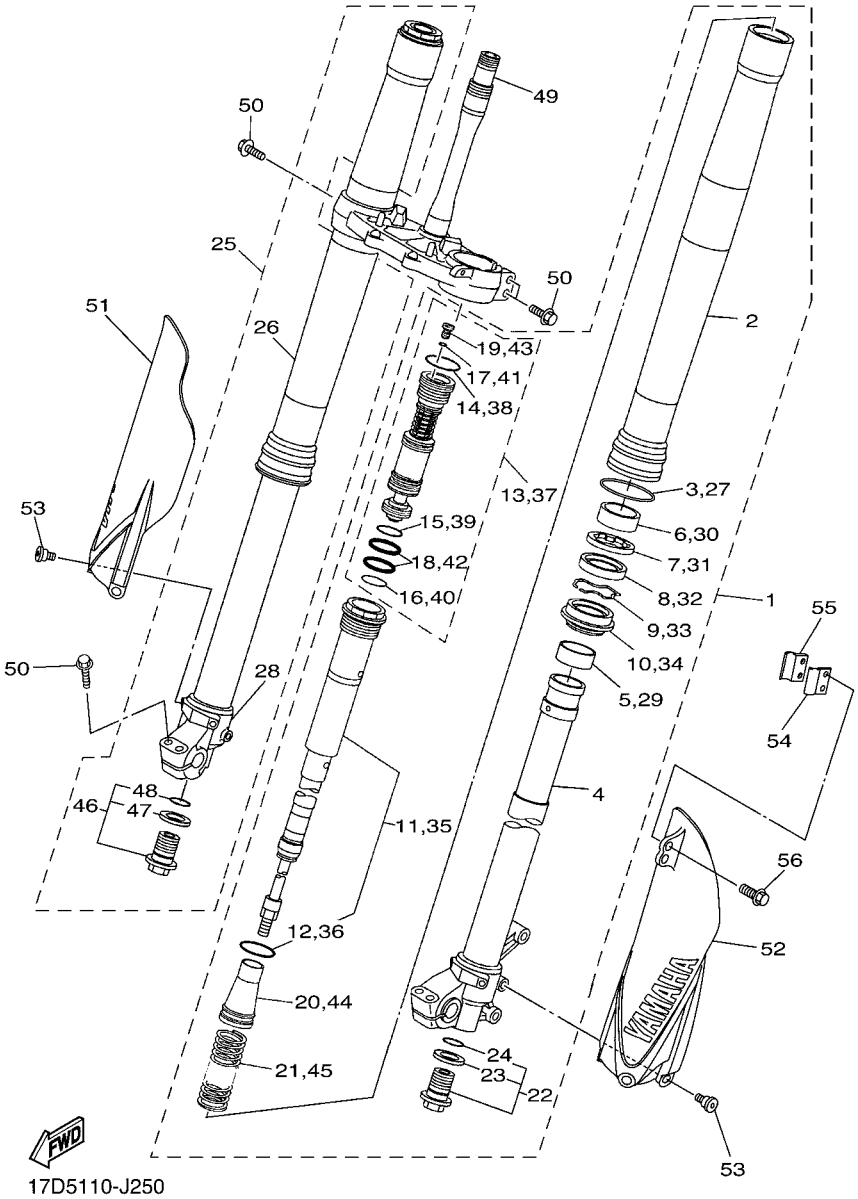

FIG. 25 FRONT FORK

REF. NO.	PART NO.	DESCRIPTION	17DD	17DE	17DF	17DG		REMARKS
47	2HH–23158–L0	..GASKET	1	1	1	1		
48	276–23114–00	..GASKET	1	1	1	1		
49	17D–23340–50	UNDER BRACKET COMP.	1	1	1	1		
50	90105–08154	BOLT, FLANGE	8	8	8	8		
51	17D–2315J–50	PROTECTOR 2	1	1	1	1		
52	17D–2315H–50	PROTECTOR 1	1	1	1	1		
53	90109–06232	BOLT	6	6	6	6		
54	17D–23466–00	CLAMP	1	1	1	1		
55	17D–23467–00	CLAMP	1	1	1	1		
56	90105–06170	BOLT, FLANGE	2	2	2	2		

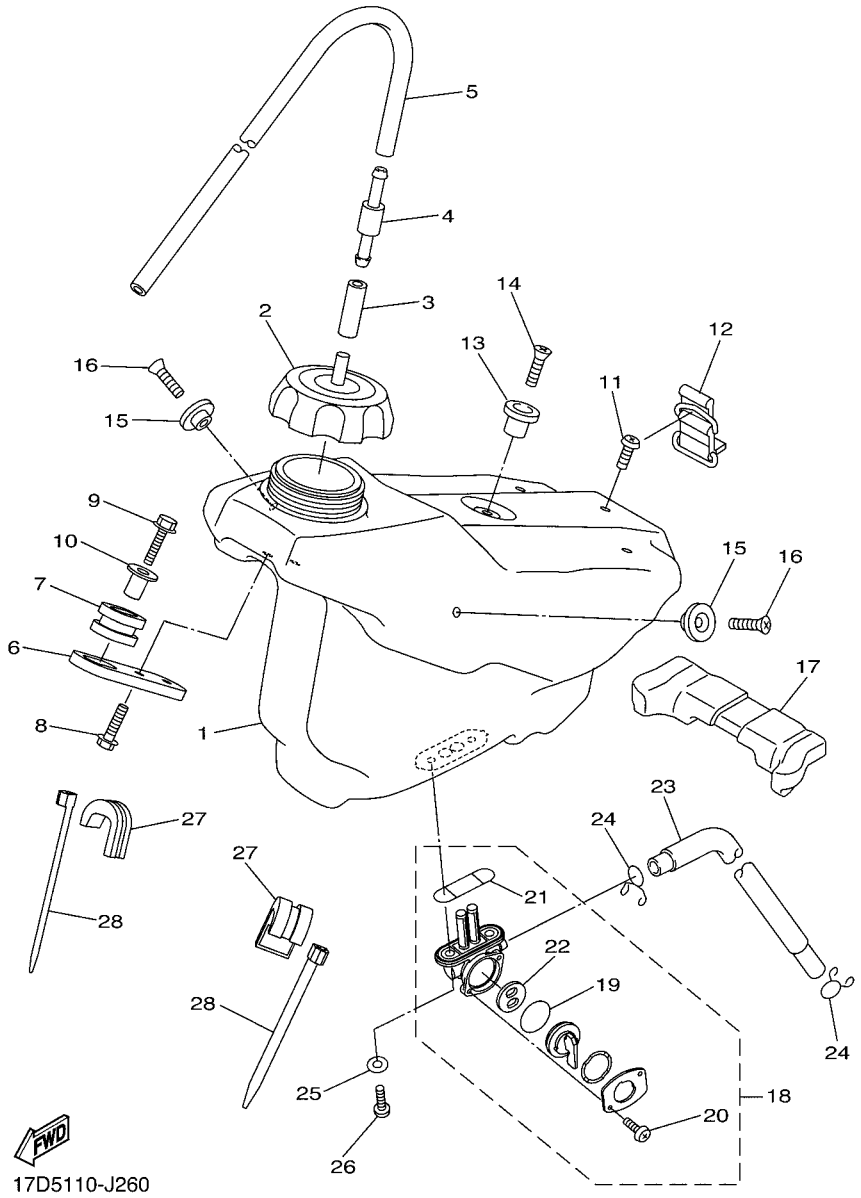

FIG. 26 FUEL TANK

REF. NO.	PART NO.	DESCRIPTION	17DD	17DE	17DF	17DG		REMARKS
1	17D–24110–50	FUEL TANK COMP.	1	1	1	1		
2	5NY–24610–00	CAP ASSY	1	1	1	1		
3	90445–09220	HOSE (L30)	1	1	1	1		
4	3XJ–24380–00	PIPE JOINT ASSY	1	1	1	1		
5	90445–09251	HOSE (L350)	1	1	1	1		
6	17D–24144–00	HOLDER, DAMPER	1	1	1	1		
7	90480–17008	GROMMET	1	1	1	1		
8	90105–06107	BOLT, FLANGE	2	2	2	2		
9	90105–06111	BOLT, FLANGE	1	1	1	1		
10	3JD–24186–00	WASHER, SPECIAL	1	1	1	1		
11	98902–06025	SCREW, BIND	1	1	1	1		
12	5SF–24173–00	BAND, TANK FITTING 1	1	1	1	1		
13	4EW–2412F–00	BRACKET, SEAT	1	1	1	1		
14	98702–06025	SCREW, FLAT HEAD	1	1	1	1		
15	17D–2412F–00	BRACKET, SEAT	2	2	2	2		
16	98702–06020	SCREW, FLAT HEAD	2	2	2	2		
17	17D–24181–50	DAMPER, LOCATING 1	1	1	1	1		
18	4DP–24500–01	FUEL COCK ASSY 1	1	1	1	1		
19	3AJ–24534–01	.SEAL, COCK	1	1	1	1		
20	98507–03008	.SCREW, PAN HEAD	2	2	2	2		
21	4X8–24512–00	.O-RING	1	1	1	1		
22	3AC–24523–00	.VALVE PACKING	1	1	1	1		
23	90445–11059	HOSE	1	1	1	1		
24	90467–100A1	CLIP	2	2	2	2		
25	90202–05193	WASHER, PLATE	2	2	2	2		
26	90149–06108	SCREW	2	2	2	2		
27	17D–24182–50	DAMPER, LOCATING 2	2	2	2	2		

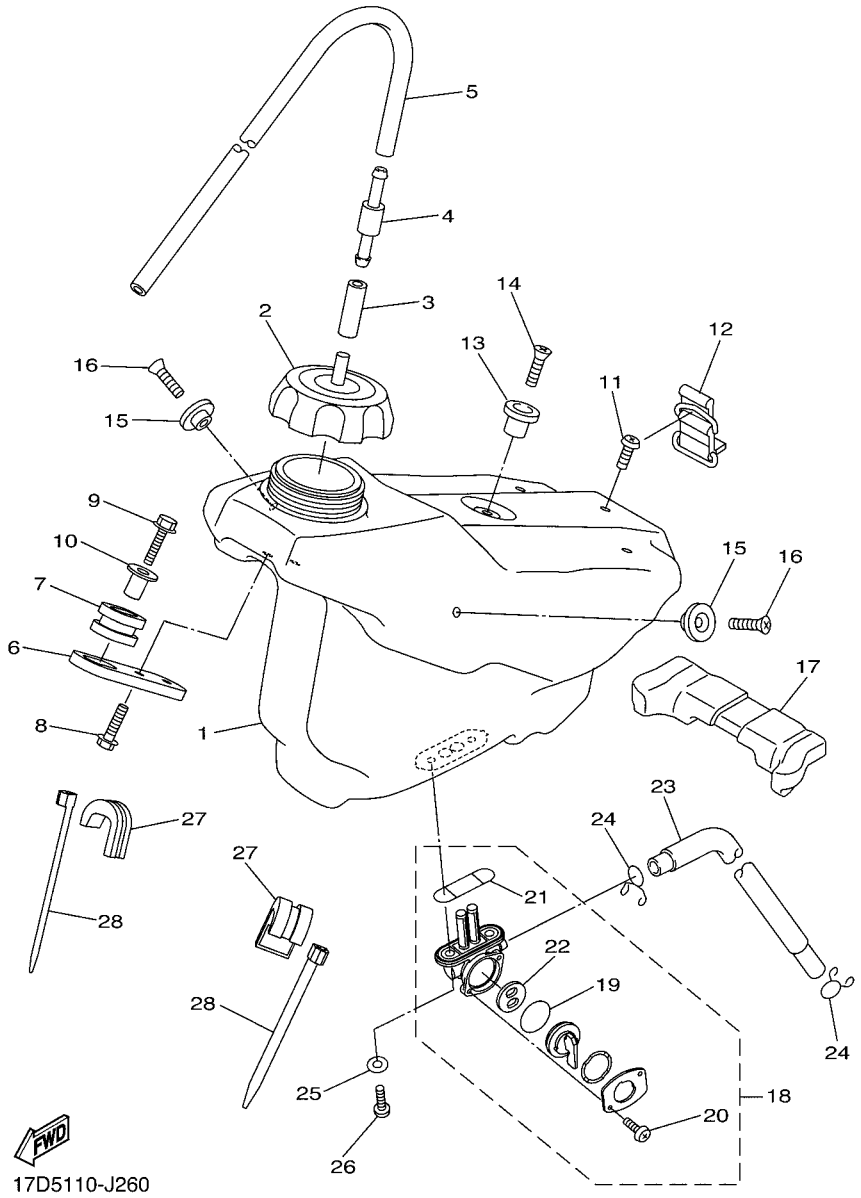

FIG. 26 FUEL TANK

REF. NO.	PART NO.	DESCRIPTION	17DD	17DE	17DF	17DG		REMARKS
28	90464–12045	CLAMP	2	2	2	2		

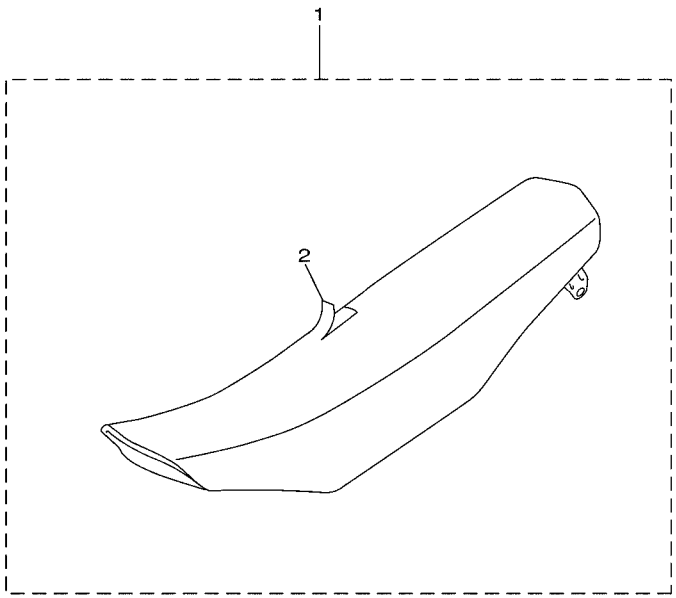

17D5110-J270

FIG. 27 SEAT

REF. NO.	PART NO.	DESCRIPTION	17DD	17DE	17DF	17DG		REMARKS
1	17D–24710–00	SINGLE SEAT ASSY	1	1	1	1		UR FOR DPBSE
	17D–24710–D0	SINGLE SEAT ASSY	1	1	1	1		UR FOR YB
2	17D–2470F–00	.SEAT COVER COMP.	1	1	1	1		UR FOR DPBSE
	17D–2470F–D0	.SEAT COVER COMP.	1	1	1	1		UR FOR YB

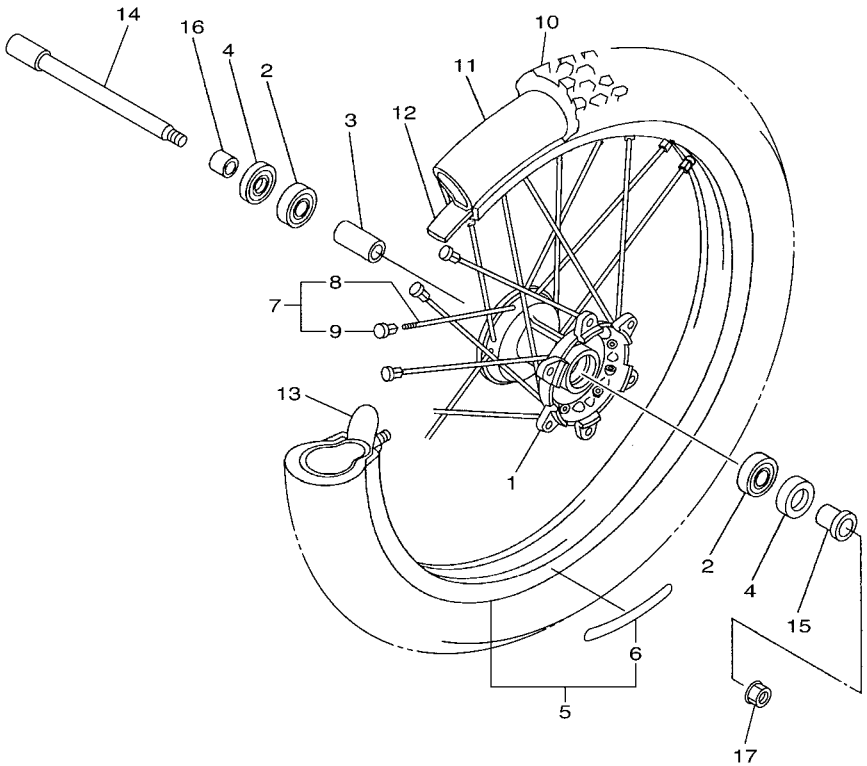

17DD100-K280

FIG. 28 FRONT WHEEL

REF. NO.	PART NO.	DESCRIPTION	17DD	17DE	17DF	17DG		REMARKS
1	5NY–25111–00	HUB, FRONT	1	1	1	1		
2	93306–90409	BEARING	2	2	2	2		
3	5NY–25117–00	SPACER, BEARING	1	1	1	1		
4	93102–26468	OIL SEAL	2	2	2	2		
5	94416–21034	RIM (1.60-21)	1					UR FOR DPBSE
	94416–21045	RIM (1.60-21)	1					UR FOR YB
	94416–21045	RIM (1.60-21)		1	1	1		
6	17D–2531B–00	.EMBLEM, WHEEL	2					FOR YB
	17D–2531B–00	.EMBLEM, WHEEL		2	2	2		
7	5NY–25104–00	SPOKE SET, FRONT	1	1	1	1		
8	5NY–25196–00	.SPOKE, INNER 1			36			
9	56A–25195–00	.NIPPLE, SPOKE			36			
10	94108–21027	TIRE (80/100-21 51M)	1			1		BRIDGESTONE
	*	TIRE (80/100-21 51R MST)		1				LM PIRELLI
	*	TIRE (80/100-21 51M D742FA)			1			LM DUNLOP
11	94209–21229	TUBE (80/100-21 M/C TR4)	1			1		BRIDGESTONE
	*	TUBE (80/100-21)		1				LM PIRELLI
	*	TUBE (80/100-21 M/C TR4)			1			LM DUNLOP
12	94330–21084	BAND,RIM (1.60-21)	1			1		BRIDGESTONE
	*	BAND, RIM (80/100-21)		1				LM PIRELLI
	*	BAND, RIM (22-21)			1			LM DUNLOP
13	5SF–25394–00	SPACER, BEAD	1	1	1	1		
14	5XC–25181–G0	AXLE, WHEEL	1	1	1	1		
15	5XC–25183–G0	COLLAR, WHEEL	1	1	1	1		
16	5XC–25186–G0	COLLAR, WHEEL	1	1	1	1		
17	90179–16011	NUT	1	1	1	1		

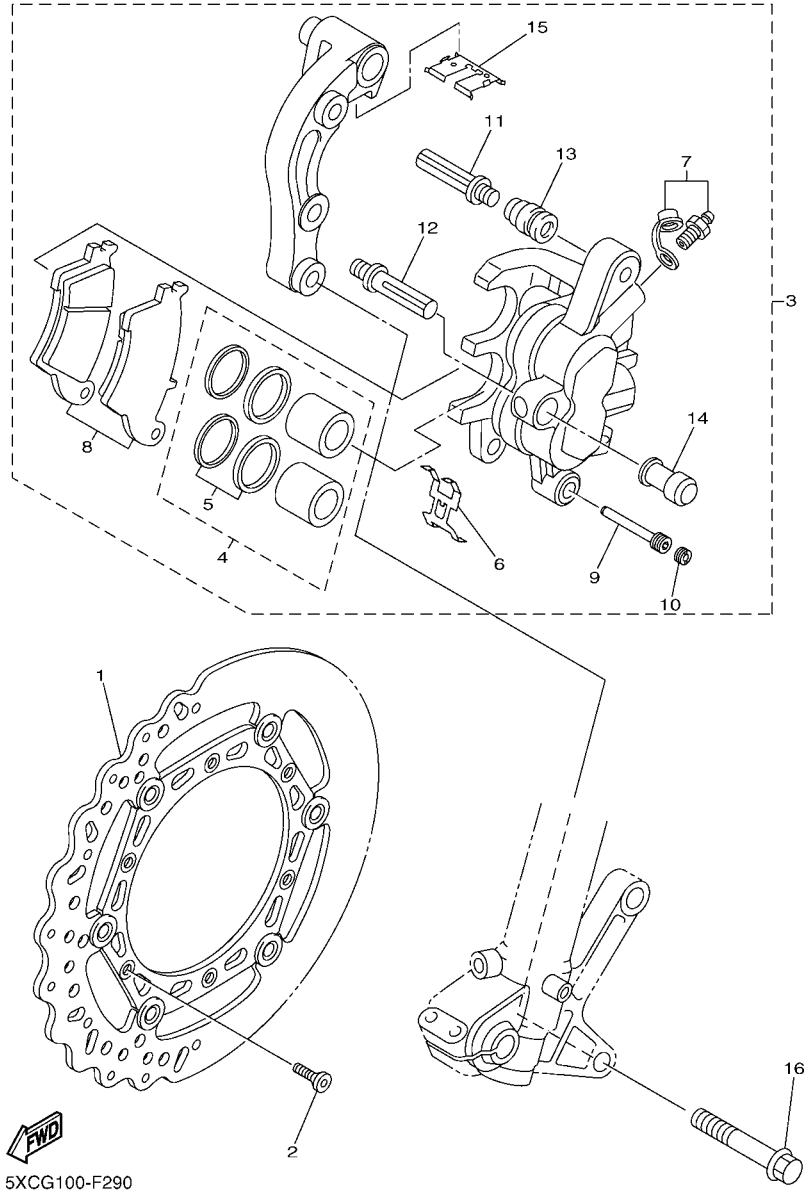

FIG. 29 FRONT BRAKE CALIPER

REF. NO.	PART NO.	DESCRIPTION	17DD	17DE	17DF	17DG		REMARKS
1	5XC–2581T–G0	DISK BRAKE ASSY	1	1	1	1		
2	90151–06051	SCREW, COUNTERSUNK	6	6	6	6		
3	5XC–2580T–G0	CALIPER ASSY (LEFT)	1	1	1	1		
4	5XC–W0057–00	.PISTON ASSY, CALIPER	1	1	1	1		
5	5KM–W0047–10	..CALIPER SEAL KIT	1	1	1	1		
6	5DH–25919–00	.SUPPORT, PAD	1	1	1	1		
7	1UY–W0048–50	.BLEED SCREW KIT	1	1	1	1		
8	5XC–W0045–00	.BRAKE PAD KIT	1	1	1	1		
9	5DH–25933–00	.PIN, PAD	1	1	1	1		
10	5DH–25916–00	.PLUG	1	1	1	1		
11	3SP–25926–51	.BOLT	1	1	1	1		
12	3SP–25914–51	.PIN, SLIDE	1	1	1	1		
13	3JD–25917–00	.BOOT, CALIPER	1	1	1	1		
14	1UY–25937–51	.BOOT 2	1	1	1	1		
15	5XC–25849–G0	.RETAINER, CALIPER	1	1	1	1		
16	90105–08137	BOLT, FLANGE	2	2	2	2		

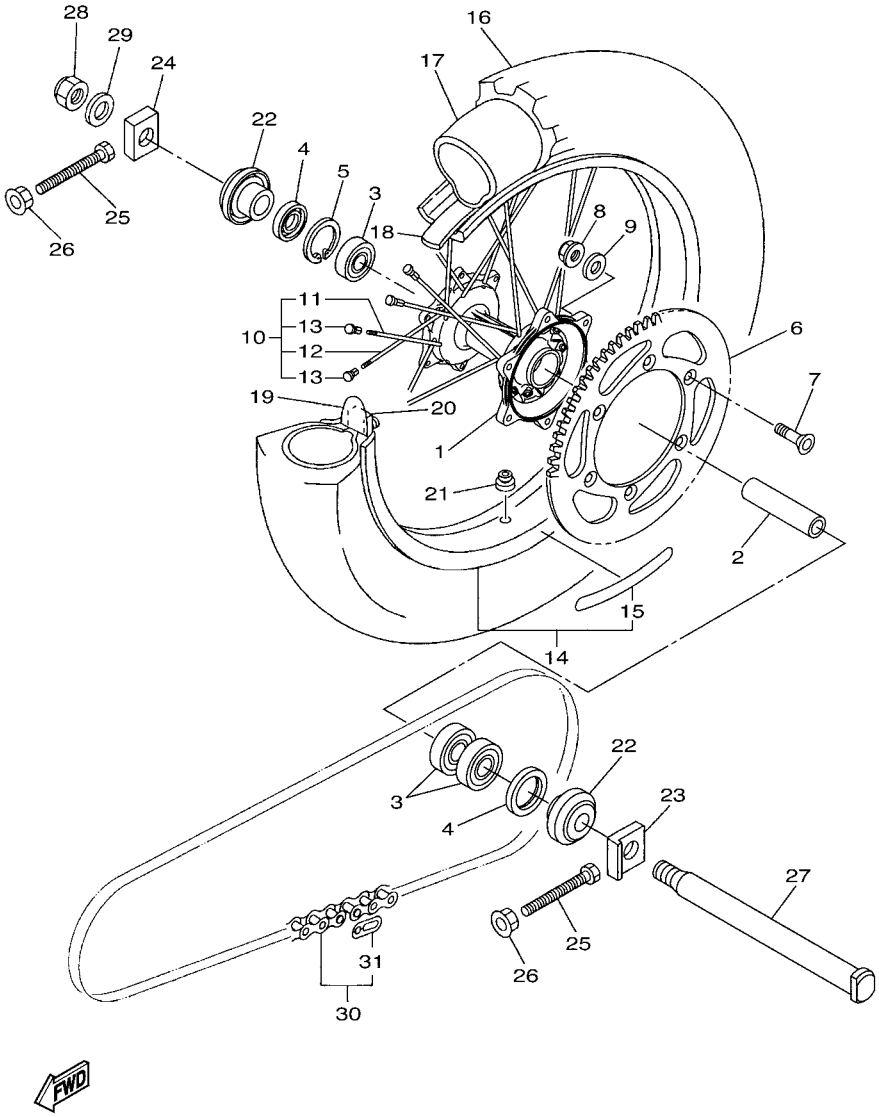

17DD100-K300

FIG. 30 REAR WHEEL

REF. NO.	PART NO.	DESCRIPTION	17DD	17DE	17DF	17DG		REMARKS
1	17D–25311–00	HUB, REAR	1	1	1	1		
2	17D–25317–00	SPACER, BEARING	1	1	1	1		
3	93306–90510	BEARING	3	3	3	3		
4	93102–32337	OIL SEAL	2	2	2	2		
5	99009–42700	CIRCLIP	1	1	1	1		
6	17D–25449–50	SPROCKET, DRIVEN (49T)	1					STD
	17D–25451–50	SPROCKET, DRIVEN (51T)		1	1	1		STD
	17D–25447–50	SPROCKET, DRIVEN (47T)	1	1	1	1		AP
	17D–25448–50	SPROCKET, DRIVEN (48T)	1	1	1	1		AP
	17D–25450–50	SPROCKET, DRIVEN (50T)	1	1	1	1		AP
	17D–25452–50	SPROCKET, DRIVEN (52T)	1	1	1	1		AP
	17D–25451–50	SPROCKET, DRIVEN (51T)	1					AP
	17D–25449–50	SPROCKET, DRIVEN (49T)		1	1	1		AP
7	90109–08078	BOLT	6	6	6	6		
8	90185–08008	NUT, SELF-LOCKING	6	6	6	6		
9	90201–08048	WASHER, PLATE	6	6	6	6		
10	34P–25304–00	SPOKE SET, REAR	1	1	1	1		
11	34P–25396–00	.SPOKE, INNER 2			18			
12	34P–25397–00	.SPOKE, OUTER 2			18			
13	5ET–25395–00	.NIPPLE, SPOKE			36			
14	94418–19026	RIM (1.85-19)	1					UR FOR DPBSE
	94418–19036	RIM (1.85-19)	1					UR FOR YB
	94418–19036	RIM (1.85-19)		1	1	1		
15	17D–2531B–00	.EMBLEM, WHEEL	2					FOR YB
	17D–2531B–00	.EMBLEM, WHEEL		2	2	2		
16	94110–19019	TIRE (100/90-19 57M M404)	1			1		BRIDGESTONE
	*	TIRE (100/90-19 57M NHS)		1				LM PIRELLI

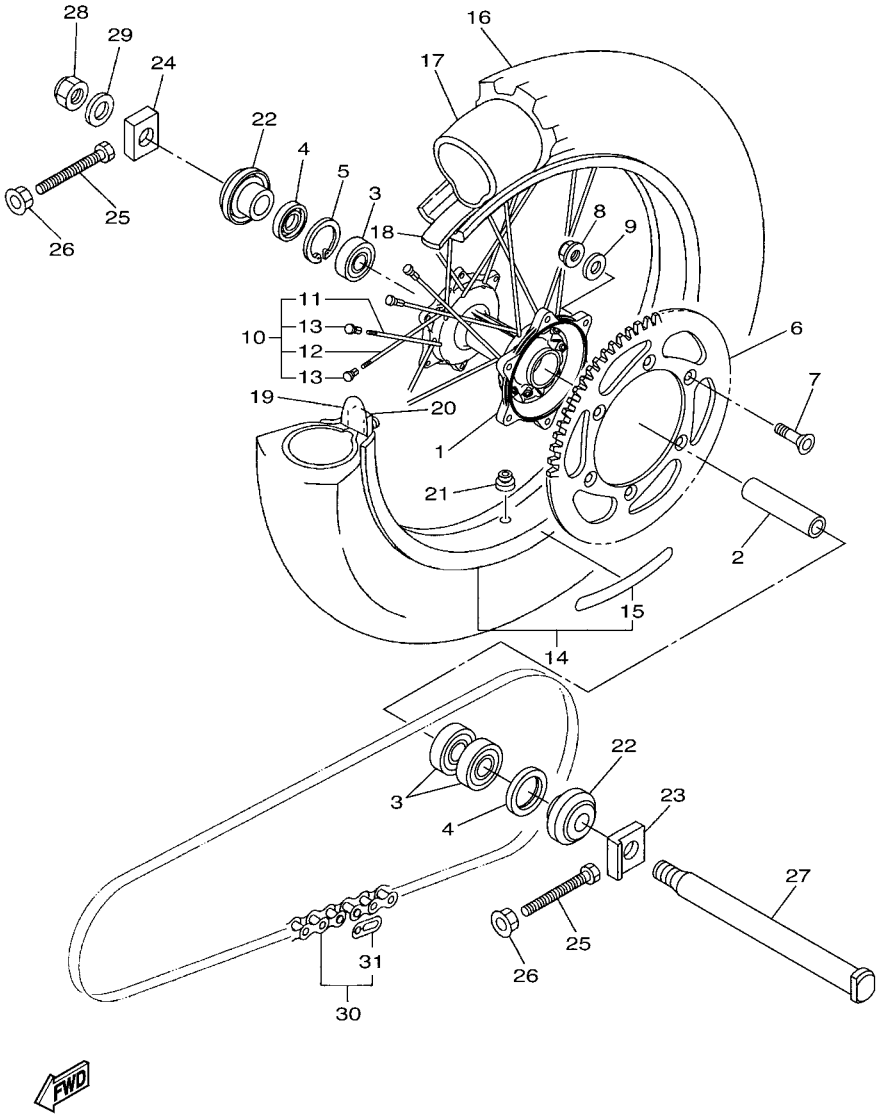

17DD100-K300

FIG. 30 REAR WHEEL

REF. NO.	PART NO.	DESCRIPTION	17DD	17DE	17DF	17DG		REMARKS
16	*	TIRE (100/90-19 57M D756G)			1			LM DUNLOP
17	94210–19222	TUBE (100/90-19 M/C TR4)	1			1		BRIDGESTONE
	*	TUBE (110/90-19)		1				LM PIRELLI
	*	TUBE (100/90-19 M/C TR4 BTL)			1			LM DUNLOP
18	94316–19156	BAND, RIM (1.85-19)	1			1		BRIDGESTONE
	*	BAND, RIM (3.50-18)		1				LM METZELER
	*	BAND, RIM (22-19)			1			LM DUNLOP
19	4XM–25394–00	SPACER, BEAD	1	1	1	1		
20	4XM–25364–00	DAMPER	1	1	1	1		
21	90480–08608	GROMMET	1	1	1	1		
22	17D–2530S–00	COLLAR ASSY	2	2	2	2		
23	17D–25388–00	PULLER, CHAIN 1	1	1	1	1		
24	17D–25389–00	PULLER, CHAIN 2	1	1	1	1		
25	90101–08006	BOLT	2	2	2	2		
26	90179–08019	NUT	2	2	2	2		
27	17D–25381–00	AXLE, WHEEL	1	1	1	1		
28	90185–22011	NUT, SELF-LOCKING	1	1	1	1		
29	90201–22022	WASHER, PLATE	1	1	1	1		
30	9Y581–92111	CHAIN (DID 520D 112L)	1					UR FOR DPBSE
	9Y581–92113	CHAIN (DID 520D 114L)		1	1	1		UR FOR DPBSE
	9Y582–28111	CHAIN (DID520DMA2-114LL)	1					UR FOR YB
	9Y582–28113	CHAIN (DID520DMA2-114LL)		1	1	1		UR FOR YB
31	94681–68001	.JOINT,CHAIN (DID 520DM-RJ)	1	1	1	1		UR FOR DPBSE
	94682–28001	.JOINT, CHAIN (DID520DM G&B-RJ)	1	1	1	1		UR FOR YB

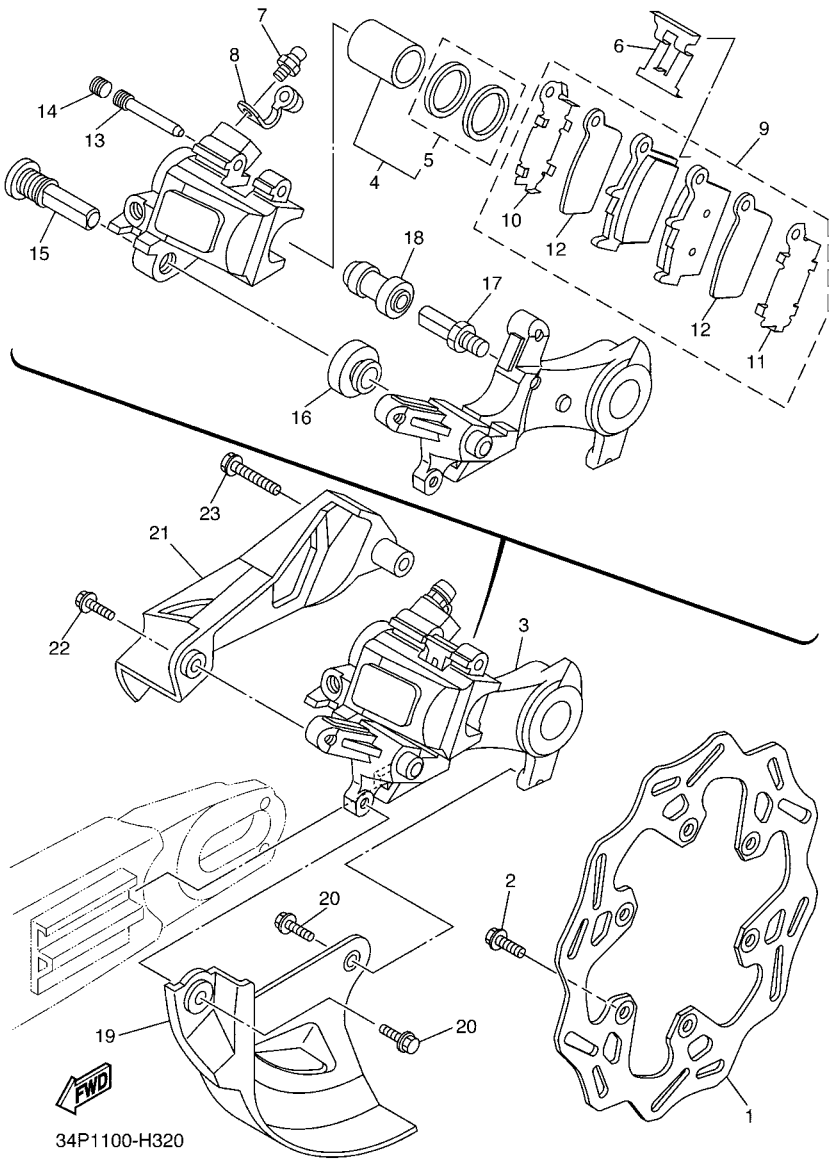

FIG. 31 REAR BRAKE CALIPER

REF. NO.	PART NO.	DESCRIPTION	17DD	17DE	17DF	17DG		REMARKS
1	2S2–2582W–70	DISK, REAR BRAKE 2	1	1	1	1		
2	90105–06156	BOLT, FLANGE	6	6	6	6		
3	17D–2580W–01	CALIPER ASSY, REAR 2	1		1	1		
	17D–2580W–11	CALIPER ASSY, REAR 2		1				
4	5UN–W0057–50	.PISTON ASSY, CALIPER	1	1	1	1		
5	5UN–W0047–50	..CALIPER SEAL KIT	1	1	1	1		
6	5DH–25919–50	.SUPPORT, PAD	1	1	1	1		
7	1UY–25824–51	.SCREW, BLEED	1	1	1	1		
8	1UY–25825–51	.CAP	1	1	1	1		
9	1C3–W0046–50	.BRAKE PAD KIT 2	1		1	1		
	1C3–W0046–B0	.BRAKE PAD KIT 2		1				
10	5UN–25828–60	..SHIM, CALIPER	1	1	1	1		
11	5UN–25827–60	..SHIM, CALIPER	1	1	1	1		
12	5UN–22898–60	..INSULATOR, HEAT	2	2	2	2		
13	8CR–25924–00	.PIN, PAD	1	1	1	1		
14	5DH–25916–00	.PLUG	1	1	1	1		
15	5DH–25914–50	.PIN, SLIDE	1	1	1	1		
16	3JD–25917–00	.BOOT, CALIPER	1	1	1	1		
17	5UN–25914–00	.PIN, SLIDE	1	1	1	1		
18	1UY–25937–51	.BOOT 2	1	1	1	1		
19	17D–25718–50	PROTECTOR, DISK BRAKE	1	1	1	1		
20	90105–06110	BOLT, FLANGE	2	2	2	2		
21	17D–27491–50	PROTECTOR	1	1	1	1		
22	90105–06107	BOLT, FLANGE	1	1	1	1		
23	90105–06111	BOLT, FLANGE	1	1	1	1		

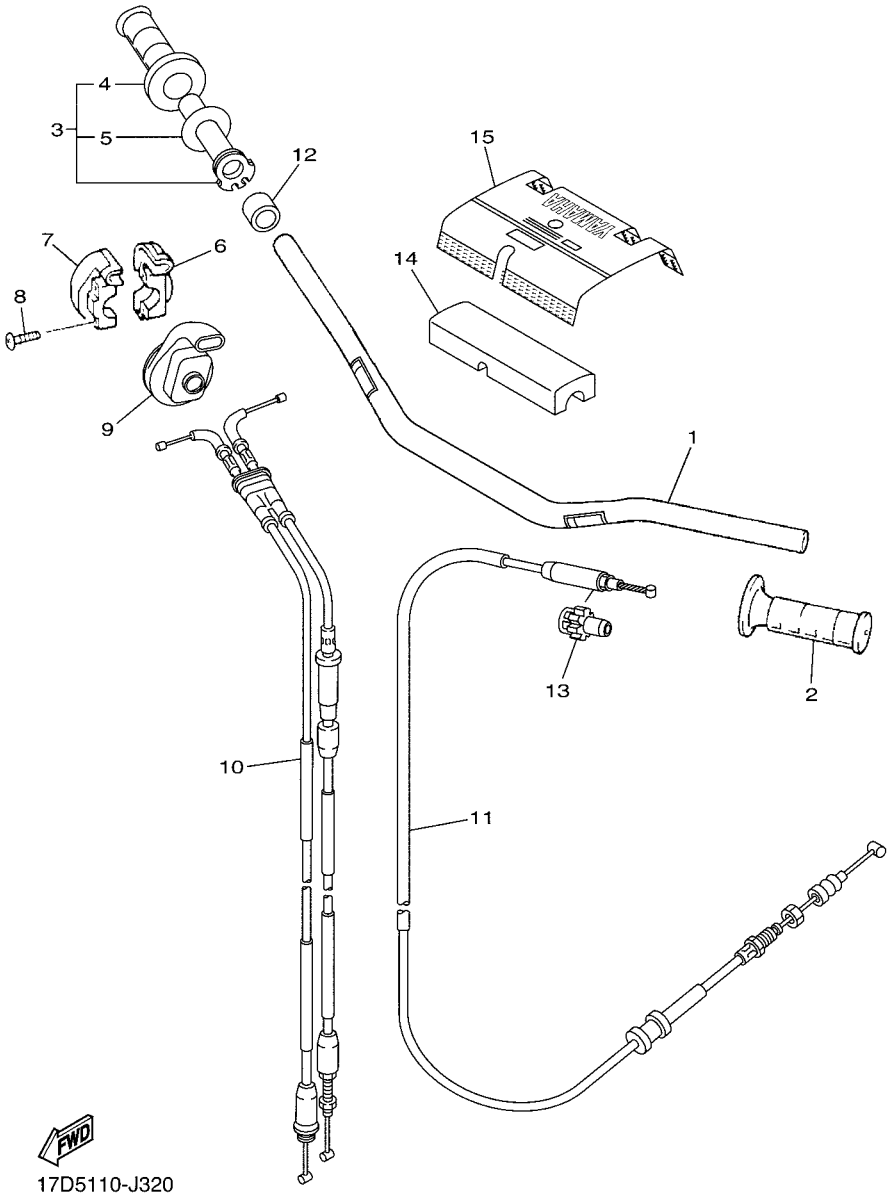

FIG. 32 STEERING HANDLE & CABLE

REF. NO.	PART NO.	DESCRIPTION	17DD	17DE	17DF	17DG		REMARKS
1	5XC–26111–L1	HANDLEBAR	1	1	1	1		
2	4GY–26241–00	GRIP	1	1	1	1		
3	5TJ–26240–C0	GRIP ASSY	1	1	1	1		
4	4GY–26242–00	.GRIP (RIGHT)	1	1	1	1		
5	3Y1–26249–00	.RING, LEAF	1	1	1	1		
6	5BE–26281–00	CAP, GRIP UPPER	1	1	1	1		
7	5BE–26282–00	CAP, GRIP UNDER	1	1	1	1		
8	98507–05020	SCREW, PAN HEAD	2	2	2	2		
9	5SF–26287–10	COVER, CAP GRIP	1	1	1	1		
10	17D–26302–50	THROTTLE CABLE ASSY	1	1	1	1		
11	17D–26335–50	CABLE, CLUTCH	1	1	1	1		
12	90387–225N2	COLLAR	1	1	1	1		
13	34P–26342–00	BOOT, CABLE	1	1	1	1		
14	17D–26124–00	PROTECTOR, HANDLEBAR	1	1	1	1		
15	5XC–26143–L0	COVER,HAND,UPPER 1	1	1	1	1		UR FOR DPBSE
	5XC–26143–M0	COVER,HAND,UPPER 1	1	1	1	1		UR FOR YB

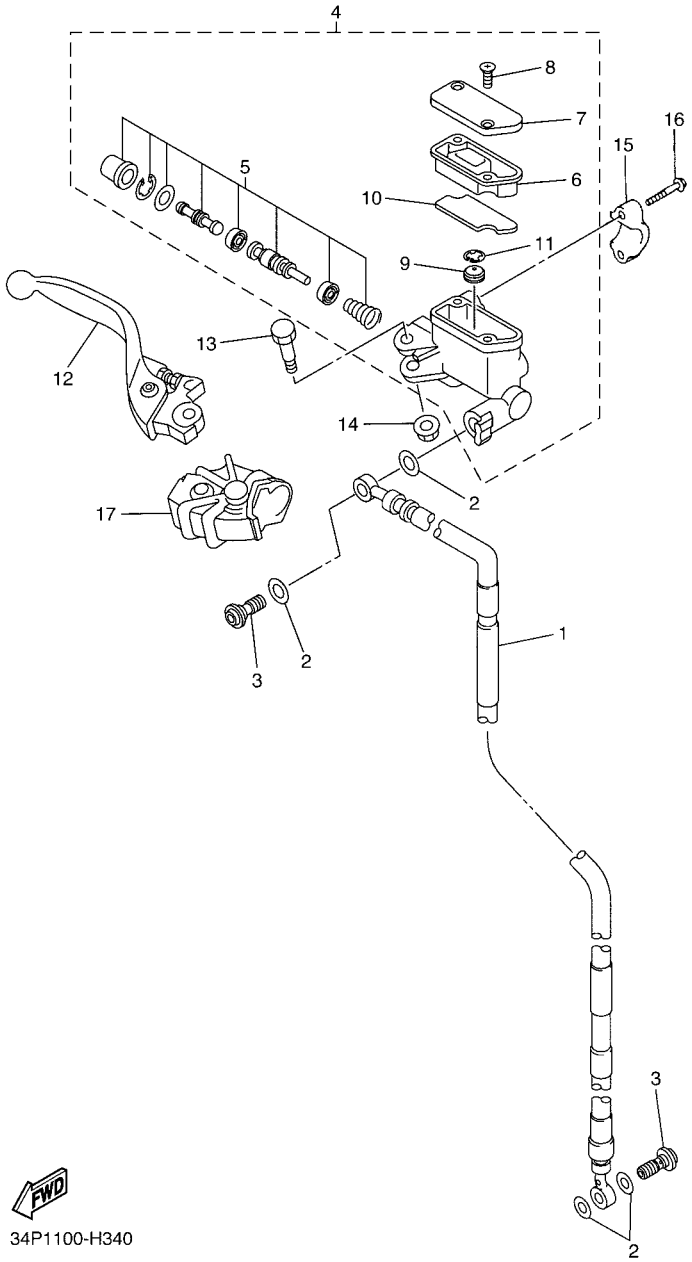

FIG. 33 FRONT MASTER CYLINDER

REF. NO.	PART NO.	DESCRIPTION	17DD	17DE	17DF	17DG		REMARKS
1	17D–25872–50	HOSE, BRAKE 1	1	1	1	1		
2	90430–10005	GASKET	4	4	4	4		
3	90401–10172	BOLT, UNION	2	2	2	2		
4	5XC–W2587–00	MASTER CYLINDER SUB ASSY	1	1	1	1		
5	5XC–W0041–00	.CYLINDER KIT, MASTER	1	1	1	1		
6	5XC–25854–G0	.DIAPHRAGM, RESERVOIR	1	1	1	1		
7	5XC–25852–G0	.CAP, RESERVOIR	1	1	1	1		
8	98706–04012	.SCREW, FLAT HEAD	2	2	2	2		
9	5CG–25715–00	.SEPARATOR ASSY	1	1	1	1		
10	5XC–25853–G0	.FLOAT, RESERVOIR	1	1	1	1		
11	5CG–2585G–00	.CIRCLIP	1	1	1	1		
12	5XC–83922–L0	LEVER 2	1	1	1	1		
13	5MV–2589F–00	BOLT, LEVER	1	1	1	1		
14	95701–06500	NUT, WITH WASHER	1	1	1	1		
15	5MV–25867–00	BRACKET, MASTER CYLINDER	1	1	1	1		
16	5MV–25833–00	BOLT, FITTING	2	2	2	2		
17	5XC–26372–G0	COVER, HANDLE LEVER 1	1	1	1	1		

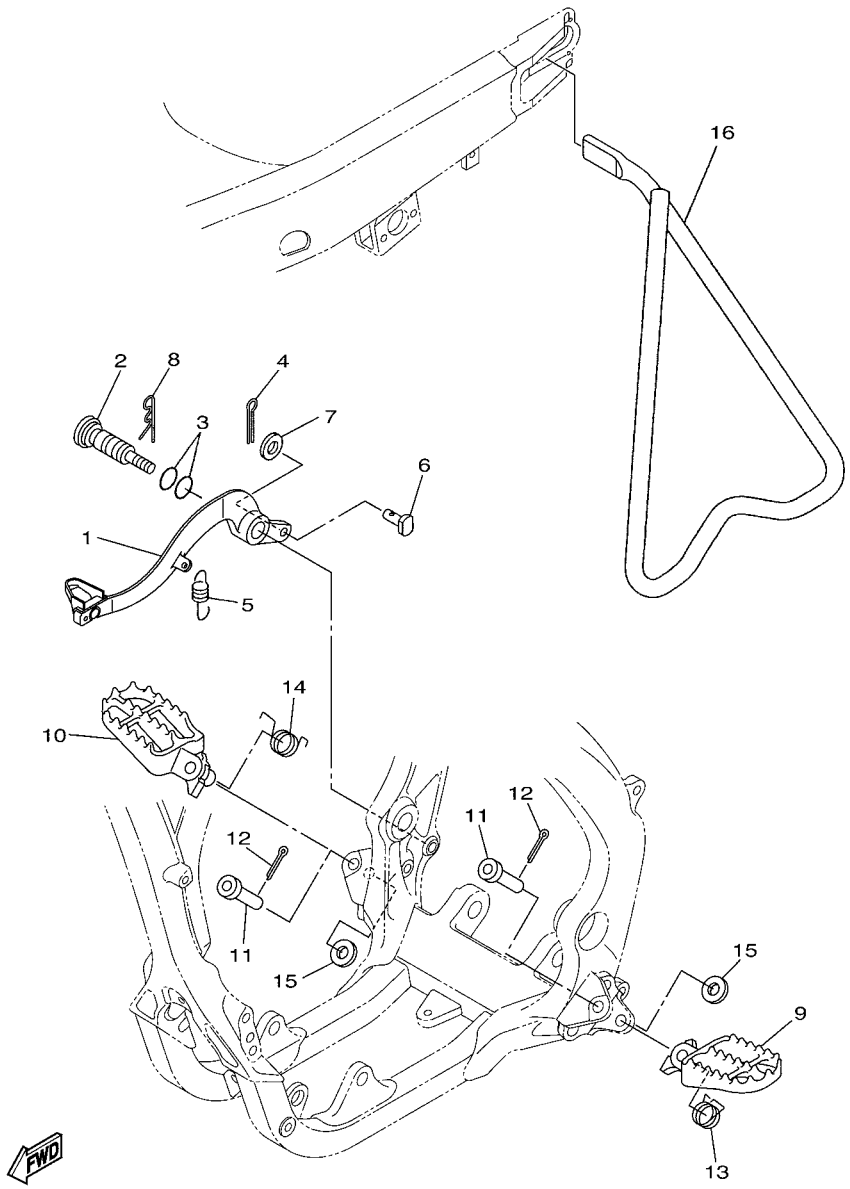

17D5110-J340

FIG. 34 STAND & FOOTREST

REF. NO.	PART NO.	DESCRIPTION	17DD	17DE	17DF	17DG		REMARKS
1	17D–27200–51	PEDAL, BRAKE	1	1	1	1		
2	17D–27217–00	BOLT	1	1	1	1		
3	93210–11073	O-RING	2	2	2	2		
4	91402–20012	PIN, COTTER	1	1	1	1		
5	90506–16007	SPRING, TENSION	1	1	1	1		
6	90240–08120	PIN, CLEVIS	1	1	1	1		
7	90201–08044	WASHER, PLATE	1	1	1	1		
8	90468–16001	CLIP	1	1	1	1		
9	17D–27411–00	FOOTREST 1	1	1	1	1		
10	17D–27421–00	FOOTREST 2	1	1	1	1		
11	90240–10004	PIN, CLEVIS	2	2	2	2		
12	91402–25015	PIN, COTTER	2	2	2	2		
13	90508–28015	SPRING, TORSION	1	1	1	1		
14	90508–28018	SPRING, TORSION	1	1	1	1		
15	90201–10032	WASHER, PLATE	2	2	2	2		
16	34P–27311–00	STAND, SIDE	1	1	1	1		

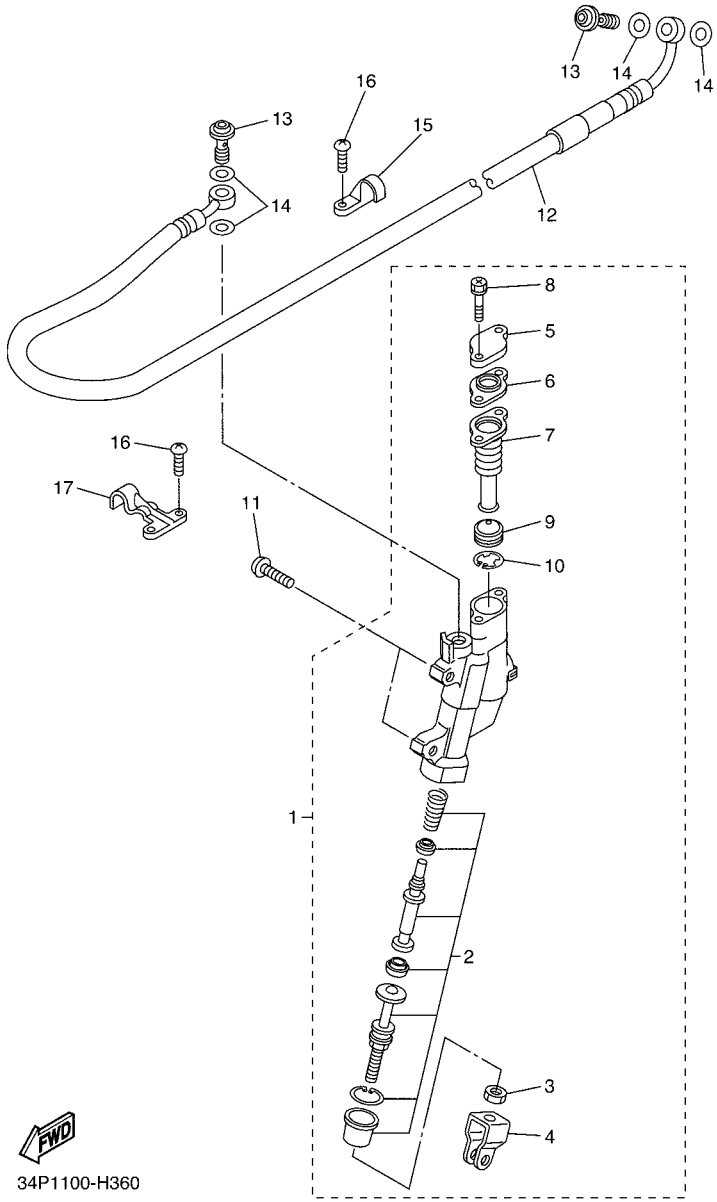

FIG. 35 REAR MASTER CYLINDER

REF. NO.	PART NO.	DESCRIPTION	17DD	17DE	17DF	17DG		REMARKS
1	17D–2583V–00	RR. MASTER CYLINDER ASSY.	1	1	1	1		
2	5UN–W0042–50	.CYLINDER KIT, MASTER	1	1	1	1		
3	5UN–27218–00	.NUT	1	1	1	1		
4	5UN–27222–00	.JOINT	1	1	1	1		
5	5UN–25852–50	.CAP, RESERVOIR	1	1	1	1		
6	5UN–2585B–00	.PLATE, DIAPHRAGM	1	1	1	1		
7	5UN–25854–00	.DIAPHRAGM, RESERVOIR	1	1	1	1		
8	5UN–27217–00	.BOLT	2	2	2	2		
9	5CG–25715–00	.SEPARATOR ASSY	1	1	1	1		
10	5CG–2585G–00	.CIRCLIP	1	1	1	1		
11	90111–06116	BOLT,HEX. SOCKET BUTTON	2	2	2	2		
12	5XC–25873–L0	HOSE, BRAKE 2	1	1	1	1		
13	90401–10172	BOLT, UNION	2	2	2	2		
14	90430–10005	GASKET	4	4	4	4		
15	1C3–25886–50	HOLDER, BRAKE HOSE	1	1	1	1		
16	98502–05010	SCREW, PAN HEAD	4	4	4	4		
17	1C3–25876–50	HOLDER, BRAKE HOSE 2	1	1	1	1		

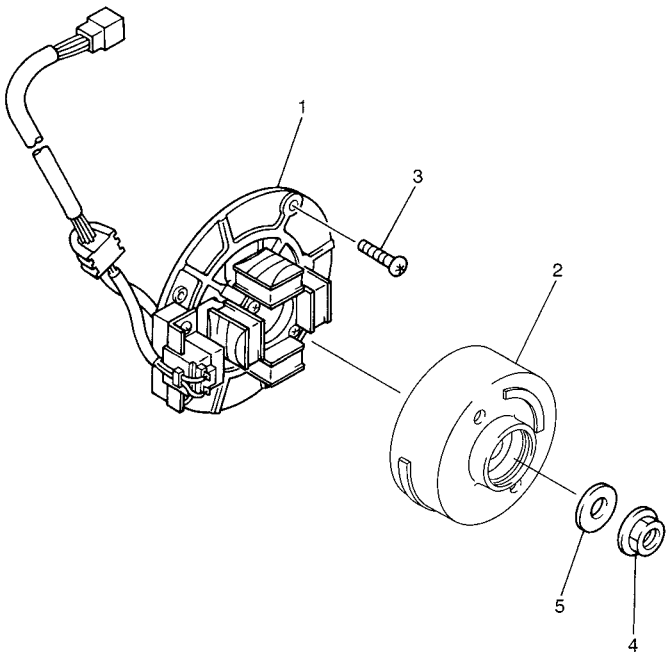

5TA1100-B360

FIG. 36 GENERATOR

REF. NO.	PART NO.	DESCRIPTION	17DD	17DE	17DF	17DG		REMARKS
1	17D–85560–50	BASE ASSY	1	1	1	1		
2	17D–85550–10	ROTOR ASSY	1	1	1	1		
3	90149–06121	SCREW	3	3	3	3		
4	90179–12657	NUT	1	1	1	1		
5	90201–127E1	WASHER, PLATE	1	1	1	1		

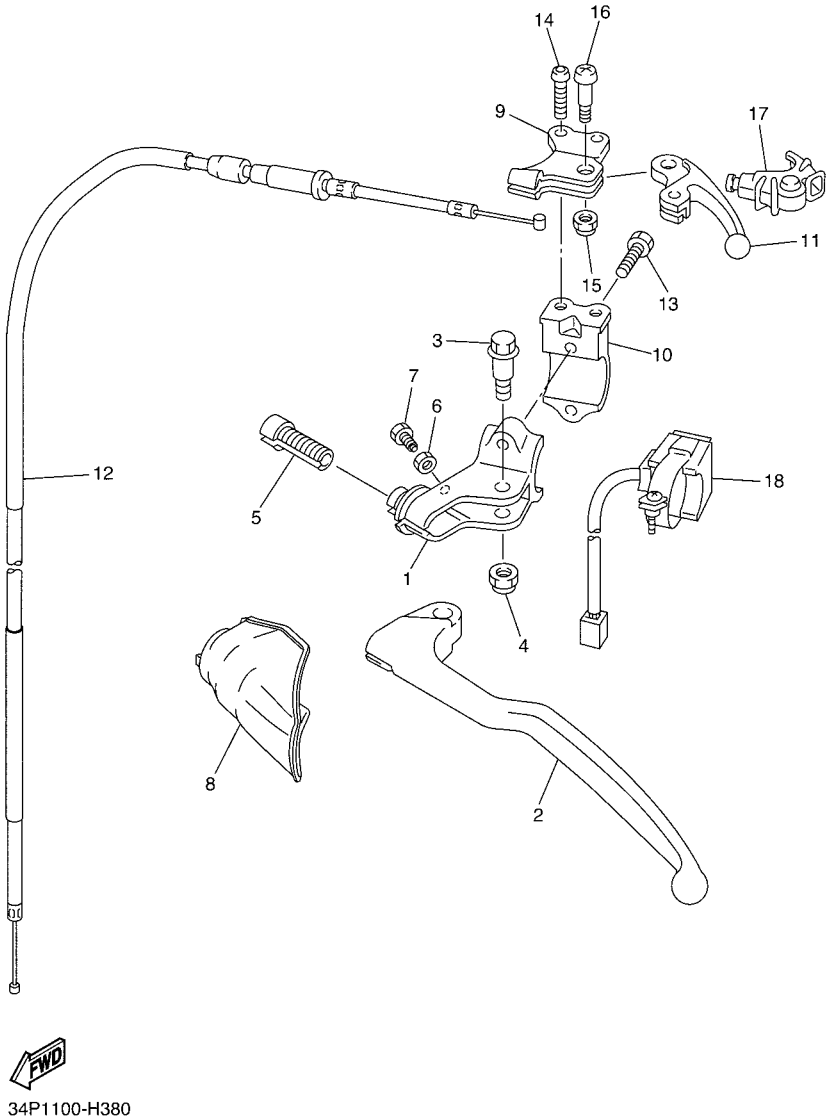

FIG. 37 HANDLE SWITCH & LEVER

REF. NO.	PART NO.	DESCRIPTION	17DD	17DE	17DF	17DG		REMARKS
1	17D–82911–00	HOLDER, LEVER 1	1	1	1	1		
2	17D–83912–00	LEVER 1	1	1	1	1		
3	90109–06034	BOLT	1	1	1	1		
4	5LP–84126–10	NUT, LENS FITTING	1	1	1	1		
5	17D–26337–00	BOLT, ADJUSTING	1	1	1	1		
6	95302–05600	NUT	1	1	1	1		
7	90101–05005	BOLT	1	1	1	1		
8	34P–26372–00	COVER, HANDLE LEVER 1	1	1	1	1		
9	5XD–82946–00	HOLDER, STARTER LEVER	1	1	1	1		
10	17D–82913–00	HOLDER, LEVER LOWER 1	1	1	1	1		
11	5TA–83941–00	LEVER, STARTER	1	1	1	1		
12	17D–26334–50	CABLE, STARTER 2	1	1	1	1		
13	95022–06020	BOLT, FLANGE	2	2	2	2		
14	92012–05012	BOLT, BUTTON HEAD	2	2	2	2		
15	95602–05100	NUT, U	1	1	1	1		
16	90149–05162	SCREW	1	1	1	1		
17	5TA–26339–00	BOOT	1	1	1	1		
18	17D–83976–00	SWITCH, HANDLE 1	1	1	1	1		

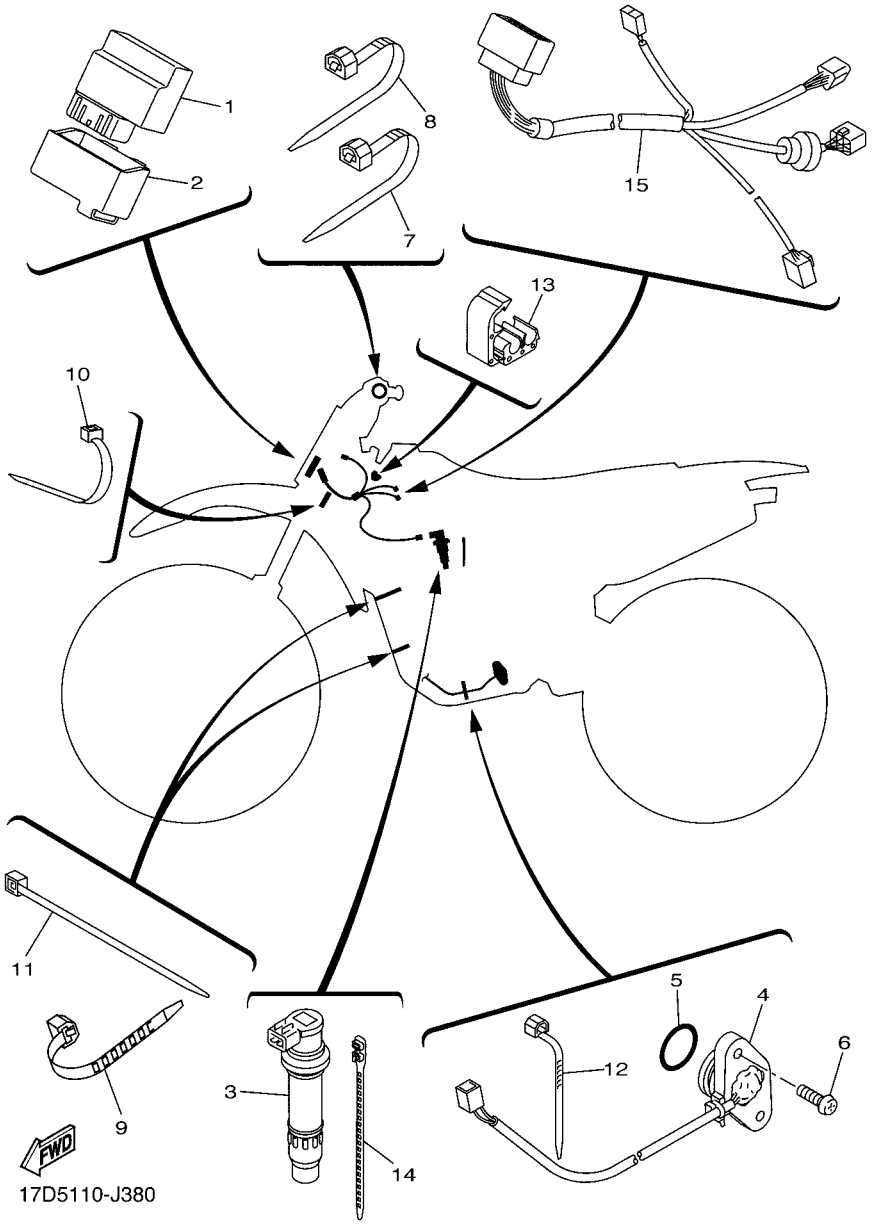

FIG. 38 ELECTRICAL 1

REF. NO.	PART NO.	DESCRIPTION	17DD	17DE	17DF	17DG		REMARKS
1	17D–85540–50	C.D.I. UNIT ASSY	1					
	17D–85540–60	C.D.I. UNIT ASSY		1	1	1		
2	17D–85546–50	BAND	1	1	1	1		
3	5UL–82310–20	IGNITION COIL ASSY	1	1	1	1		
4	17D–82540–00	NEUTRAL SWITCH ASSY	1	1	1	1		
5	93210–21001	O-RING	1	1	1	1		
6	90154–05022	SCREW, BINDING	2	2	2	2		
7	90464–13077	CLAMP	1	1	1	1		
8	90464–13073	CLAMP	1	1	1	1		
9	90464–15195	CLAMP	1	1	1	1		
10	90464–16014	CLAMP	1	1	1	1		
11	90464–13077	CLAMP	1	1	1	1		
12	5Y9–12491–00	CLAMP 1	2	2	2	2		
13	90464–06004	CLAMP	1	1	1	1		
14	90464–45001	CLAMP	1	1	1	1		
15	17D–82509–50	WIRE, SUB LEAD	1	1	1	1		

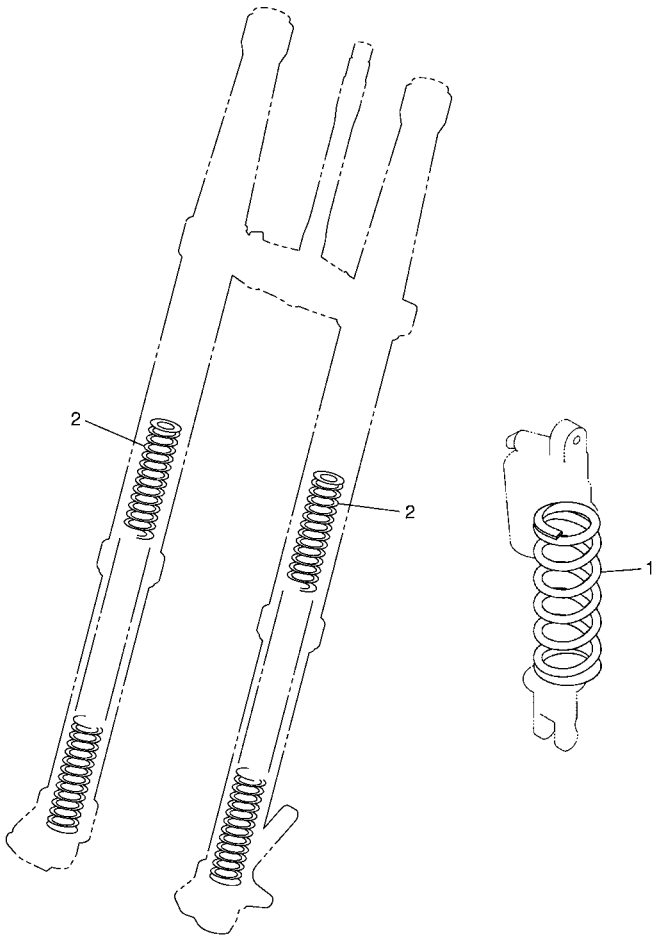

FWD

5XC9100-E390

FIG. 39 ALTERNATE FOR CHASSIS

REF. NO.	PART NO.	DESCRIPTION	17DD	17DE	17DF	17DG		REMARKS
1	5UN–22212–00	SPRING (K=42N/MM)	1	1	1	1		AP
	5UN–22212–10	SPRING (K=44N/MM)	1	1	1	1		AP
	5UN–22212–20	SPRING (K=46N/MM)	1	1	1	1		AP
	5UN–22212–30	SPRING (K=48N/MM)	1	1	1	1		AP
	5UN–22212–40	SPRING (K=50N/MM)	1	1	1	1		AP
	5UN–22212–50	SPRING (K=52N/MM)	1	1	1	1		AP
	5UN–22212–60	SPRING (K=54N/MM)	1	1	1	1		AP
	5UN–22212–70	SPRING (K=56N/MM)	1	1	1	1		AP
2	1C3–23141–A1	SPRING, FRONT FORK(K=3.9N/MM)	2	2	2	2		AP
	1C3–23141–B1	SPRING, FRONT FORK(K=4.0N/MM)	2	2	2	2		AP
	1C3–23141–C1	SPRING, FRONT FORK(K=4.1N/MM)	2	2	2	2		AP
	1C3–23141–D1	SPRING, FRONT FORK(K=4.2N/MM)	2	2	2	2		AP
	1C3–23141–E1	SPRING, FRONT FORK(K=4.3N/MM)	2	2	2	2		AP
	1C3–23141–F1	SPRING, FRONT FORK(K=4.4N/MM)	2	2	2	2		AP
	1C3–23141–G1	SPRING, FRONT FORK(K=4.5N/MM)	2	2	2	2		AP
	1C3–23141–H1	SPRING, FRONT FORK(K=4.6N/MM)	2	2	2	2		AP
	1C3–23141–J1	SPRING, FRONT FORK(K=4.7N/MM)	2	2	2	2		AP

PART NO.	REF. NO.
17D–11102–10	1 – 1
5NL–11133–10	1 – 2
5NL–11134–10	1 – 3
5XC–11166–00	1 – 20
371–11167–01	1 – 19
5NL–11181–00	1 – 14
5NL–11191–50	1 – 18
5NL–11193–00	1 – 23
5UM–1119E–00	1 – 22
5XC–11311–10	1 – 24
5NL–11351–00	1 – 25
5XC–11400–21	2 – 1
5UL–11412–20	2 – 2
5UL–11422–10	2 – 3
5NL–11454–00	2 – 13
5NL–11455–00	2 – 9
5NL–11531–00	2 – 12
5NL–11536–10	2 – 8
5NL–11603–00	2 – 19
5XC–11631–00	2 – 18
5NL–11633–00	2 – 20
5XC–11651–00	2 – 6
5XC–11681–01	2 – 4
5NL–12111–30	3 – 1
5NL–12112–30	3 – 2
5NL–12113–10	3 – 8
5NL–12114–10	3 – 9
5NL–12116–00	3 – 4
5VY–12117–00	3 – 10
1HX–12118–00	3 – 11
1WG–12118–00	3 – 13
4SV–12119–00	3 – 7
4TV–12119–00	3 – 6
5NL–12121–10	3 – 3
3GM–12126–00	3 – 5
5VY–12127–00	3 – 12
3FV–12153–10	3 – 16
3LN–12153–10	3 – 15
1HX–12168–00	3 – 14
1HX–12168–20	3 – 14
1HX–12168–40	3 – 14
1HX–12168–60	3 – 14
1HX–12168–80	3 – 14
1HX–12168–A0	3 – 14
1HX–12168–F0	3 – 14
1HX–12168–H1	3 – 14
1HX–12168–K1	3 – 14
1HX–12168–M1	3 – 14

PART NO.	REF. NO.
1HX–12168–R1	3 – 14
1HX–12168–U1	3 – 14
1HX–12168–W1	3 – 14
1HX–12168–Y1	3 – 14
1HX–12169–11	3 – 14
1HX–12169–31	3 – 14
1HX–12169–50	3 – 14
1HX–12169–70	3 – 14
1HX–12169–90	3 – 14
1HX–12169–E0	3 – 14
1HX–12169–G0	3 – 14
1HX–12169–J0	3 – 14
1HX–12169–L0	3 – 14
1HX–12169–N0	3 – 14
1HX–12169–T0	3 – 14
17D–12170–10	4 – 1
17D–12180–10	4 – 2
5TA–12210–20	4 – 10
4FM–12213–00	4 – 9
5BE–12241–00	4 – 12
5NL–12251–30	4 – 5
5NL–12252–00	4 – 6
17D–1240A–50	6 – 1
5NL–12422–20	5 – 9
5NL–12439–00	5 – 10
5DH–12451–00	5 – 4
5XC–12459–00	5 – 1
17D–12461–50	6 – 2
5SL–12462–00	6 – 3
5XC–12481–G0	6 – 6
5Y9–12491–00	38 – 12
5NL–12564–00	13 – 21
17D–12576–50	6 – 9
17D–12577–50	6 – 10
17D–12578–50	6 – 11
17D–12579–50	6 – 12
17D–12581–50	6 – 14
17D–12588–50	6 – 13
583–13113–00	8 – 20
5NL–13161–20	8 – 8
5NL–13171–10	8 – 13
5SG–13300–01	7 – 1
5NL–13320–00	7 – 3
5NL–13341–00	7 – 11
5BE–13342–00	7 – 10
5NL–13411–00	7 – 16
5XC–13412–00	7 – 15
17D–13416–00	21 – 17

PART NO.	REF. NO.
5D3–13440–00	8 – 1
5BE–13447–30	8 – 2
17D–13464–00	7 – 18
17D–13465–00	7 – 23
5XC–13597–30	9 – 1
17D–14101–50	10 – 1
17D–14101–60	10 – 1
5NL–14105–00	10 – 23
4MX–14115–00	10 – 51
3TJ–14137–40	9 – 8
	10 – 52
5BE–14146–00	10 – 53
5PA–14146–00	10 – 62
5TA–14155–00	10 – 40
633–14159–00	10 – 27
3TJ–14159–40	10 – 13
5XC–14171–00	10 – 35
3TJ–14191–40	10 – 29
5UL–14196–00	10 – 55
5TA–14197–00	10 – 56
5NX–14216–00	10 – 49
5TA–14227–00	9 – 5
5TA–14239–00	9 – 6
5TA–14261–00	10 – 54
5JG–14264–00	10 – 16
3TJ–14267–40	10 – 9
5JG–14275–00	10 – 15
5TA–14293–00	9 – 4
3TJ–14293–40	10 – 30
5XD–14325–00	10 – 63
5TA–14335–00	10 – 37
5JG–14346–00	10 – 58
5TA–14371–00	10 – 36
2S2–14374–00	10 – 39
5JG–14379–00	10 – 42
2S2–14388–00	10 – 8
4MX–14392–00	10 – 26
17D–14401–00	9 – 11
5NY–14442–00	9 – 15
4XM–14451–00	9 – 17
17D–14452–00	9 – 16
17D–14453–50	9 – 12
5NY–14455–20	9 – 14
5BE–14458–10	9 – 20
5NY–14459–00	9 – 13
5JG–14521–00	10 – 14
5JG–14522–00	10 – 7
5JG–14531–00	10 – 60

PART NO.	REF. NO.
3TJ–14536–40	10 – 32
5JG–14546–01	10 – 10
676–14548–00	10 – 25
4MX–14561–00	10 – 50
6H4–14561–00	10 – 34
5NX–14562–00	10 – 48
3TJ–14564–40	10 – 43
5JG–14565–00	10 – 59
5NL–14591–00	10 – 61
688–14592–00	10 – 4
17D–14611–50	11 – 1
5NL–14613–00	11 – 5
5XC–14628–R0	11 – 2
17D–1466G–50	11 – 7
17D–1469A–50	11 – 9
2S2–1469E–00	11 – 10
2S2–1469F–00	11 – 11
5XD–14714–00	11 – 12
17D–14750–50	11 – 6
17D–14750–60	11 – 6
5BE–14788–00	11 – 13
5TA–14916–J1	10 – 12
5TA–14916–JN	10 – 12
5TA–14916–JP	10 – 12
5TA–14916–JR	10 – 12
5TA–14916–JS	10 – 12
5TA–14916–JT	10 – 12
5TA–14916–JU	10 – 12
5TA–14916–KR	10 – 12
5TA–14916–L1	10 – 12
5TA–14916–LN	10 – 12
5TA–14916–LP	10 – 12
5TA–14916–LS	10 – 12
5TA–14916–LT	10 – 12
5TA–14916–LU	10 – 12
5TA–14916–P1	10 – 12
5TA–14916–PN	10 – 12
5TA–14916–PP	10 – 12
5TA–14916–PR	10 – 12
5TA–14916–PS	10 – 12
5TA–14916–PT	10 – 12
5TA–14916–PU	10 – 12
5TA–14916–V1	10 – 12
5TA–14916–VN	10 – 12
5TA–14916–VP	10 – 12
5TA–14916–VR	10 – 12
5TA–14916–VS	10 – 12
5TA–14916–VT	10 – 12

PART NO.	REF. NO.
5TA–14916–VU	10 – 12
5XC–14922–00	10 – 44
3TJ–14933–40	10 – 33
5TA–14934–00	10 – 46
5JG–14940–16	10 – 31
5JG–14940–17	10 – 31
5JG–14940–18	10 – 31
5JG–14940–76	10 – 31
5TA–14943–28	10 – 22
4MX–14943–41	10 – 18
4MX–14943–42	10 – 18
4MX–14943–43	10 – 18
4MX–14943–44	10 – 18
4MX–14943–45	10 – 18
4MX–14943–92	10 – 18
4MX–14943–93	10 – 18
4MX–14943–94	10 – 18
4MX–14943–95	10 – 18
5XC–14947–00	10 – 17
4MX–14948–02	10 – 19
4MX–14948–03	10 – 19
4MX–14948–04	10 – 19
	10 – 19
4MX–14948–05	10 – 19
	10 – 19
4MX–14948–06	10 – 19
4MX–14948–07	10 – 19
4JT–1494F–03	10 – 21
4JT–1494F–07	10 – 21
4JT–1494F–11	10 – 21
3TJ–1494F–13	10 – 20
3TJ–1494F–14	10 – 20
3TJ–1494F–15	10 – 20
4JT–1494F–15	10 – 21
	10 – 21
3TJ–1494F–16	10 – 20
3TJ–1494F–17	10 – 20
3TJ–1494F–18	10 – 20
3TJ–1494F–19	10 – 20
4JT–1494F–19	10 – 21
4JT–1494F–23	10 – 21
4JT–1494F–27	10 – 21
4JT–1494F–29	10 – 21
4JT–1494F–31	10 – 21
4JT–1494F–33	10 – 21
4JT–1494F–35	10 – 21
5JG–14951–00	10 – 6
5JG–14959–00	10 – 2

PART NO.	REF. NO.
5JG–14984–00	10 – 28
4SR–14985–00	10 – 24
5TA–14987–00	9 – 7
5TJ–14987–00	10 – 57
5TA–14991–00	10 – 38
4FN–14997–00	10 – 11
5TA–14997–00	10 – 41
5XC–15100–30–YX	12 – 1
3Y1–15361–00	13 – 8
3Y1–15363–10	13 – 6
5XC–15373–00	13 – 17
17D–15378–00	13 – 30
4JT–15381–01	12 – 16
5BE–15383–01	12 – 12
5NL–15388–00	12 – 14
17D–15411–50	13 – 1
5NL–15415–40	13 – 23
17D–15421–50	12 – 9
5XC–15431–01	13 – 13
5NL–15441–01	12 – 8
5NL–15451–00	13 – 9
5NL–15453–10	13 – 28
5NL–15462–00	13 – 18
5NL–15601–20	14 – 1
17D–15620–50	14 – 19
17D–15621–50	14 – 20
5NL–15641–20	14 – 2
5NL–15651–00	14 – 16
5NL–15664–00	14 – 10
5SG–15668–00	14 – 12
2S2–15671–00	14 – 5
214–15686–00	14 – 13
5NL–16111–01	15 – 1
5XC–16150–10	15 – 4
5XC–16154–00	15 – 5
5XC–16181–00	15 – 12
5XC–16321–00	15 – 7
5NL–16325–00	15 – 8
5HD–16351–00	15 – 9
5XC–16356–00	15 – 16
5NL–16357–10	15 – 21
5NL–16371–31	15 – 6
5XC–16381–10	15 – 22
4JT–16384–00	15 – 25
5NL–17121–00	16 – 9
17D–17131–10	16 – 6
17D–17141–10	16 – 7
17D–17151–10	16 – 3

PART NO.	REF. NO.
5NL–17211–10	16 – 21
5NL–17221–00	16 – 13
17D–17231–10	16 – 17
17D–17241–10	16 – 16
17D–17251–10	16 – 20
5NL–17402–01	16 – 12
5XC–17411–00	16 – 2
5NL–17466–00	12 – 11
5NL–17471–10	16 – 29
5UL–18101–20	18 – 10
5XC–18110–10	18 – 15
5LP–18122–01	18 – 5
3XK–18140–00	17 – 8
5BE–18172–00	18 – 3
3XJ–18173–10	18 – 2
3XJ–18178–00	18 – 9
3XJ–18182–00	18 – 8
3XJ–18184–00	18 – 7
2S2–18185–00	18 – 1
5NL–18501–00	17 – 5
5NL–18502–00	17 – 6
5NL–18503–00	17 – 7
5NL–18541–00	17 – 1
4UN–18542–00	17 – 4
5DH–18562–00	12 – 18
17D–21101–50	19 – 1
17D–21131–00	19 – 9
17D–21163–50	19 – 32
17D–21164–50	19 – 41
17D–2117F–50	19 – 44
5PA–2118K–00	20 – 18
5PA–2118K–10	20 – 19
5PA–2118K–20	20 – 18
17D–21190–00	19 – 7
17D–21244–10	19 – 31
17D–21274–50	19 – 37
17D–21335–50	19 – 5
17D–21417–50	19 – 34
17D–21425–50	19 – 25
17D–21426–50	19 – 26
17D–21447–00	19 – 2
17D–21448–00	19 – 3
5XC–21456–90	19 – 36
17D–2147E–50	19 – 39
17D–21511–50	20 – 1
17D–21511–60	20 – 1
17D–21610–00	20 – 8
17D–21610–D0	20 – 8

PART NO.	REF. NO.
5XE–21635–10	20 – 9
5XC–2163G–30	21 – 2
	21 – 4
17D–21642–00	20 – 15
3RV–21668–A0	22 – 32
3RV–21668–B0	22 – 33
17D–21710–00	21 – 1
17D–21720–00	21 – 3
17D–2172A–00	21 – 14
17D–2172A–10	21 – 15
17D–21730–D0	21 – 7
17D–21730–E0	21 – 7
17D–2173E–10	21 – 2
17D–2173F–10	21 – 4
17D–21740–D0	21 – 10
17D–21740–E0	21 – 10
17D–2174G–10	21 – 8
17D–2174G–20	21 – 8
17D–2174H–10	21 – 11
17D–2174H–20	21 – 11
17D–21751–00	21 – 16
5FK–2175C–00	21 – 9
	21 – 12
17D–22110–00	22 – 1
5XC–22121–91	22 – 28
34P–22122–00	22 – 29
2S2–22128–70	22 – 11
17D–22141–50	22 – 15
34P–22151–01	22 – 8
5UN–22176–00	23 – 13
30X–22178–00	19 – 10
3JD–22178–20	19 – 15
17D–2217A–00	22 – 18
17D–2217F–50	22 – 24
4V4–22184–00	19 – 11
5MV–22184–00	23 – 14
2S2–22199–70	22 – 10
17D–22200–10	23 – 1
17D–22200–20	23 – 1
17D–22200–30	23 – 1
17D–22200–50	23 – 1
17D–22200–60	23 – 1
17D–22200–70	23 – 1
17D–22201–10	23 – 2
17D–22201–20	23 – 2
17D–22201–30	23 – 2
5UN–22212–00	39 – 1
5UN–22212–10	39 – 1

PART NO.	REF. NO.
5UN–22212–20	39 – 1
5UN–22212–30	39 – 1
5UN–22212–40	39 – 1
5UN–22212–50	39 – 1
5UN–22212–60	39 – 1
5UN–22212–70	39 – 1
5UN–22212–K0	23 – 17
5UN–22212–L0	23 – 17
1C3–22213–L0	23 – 4
17D–22214–00	23 – 18
5MV–22224–00	23 – 9
4JX–22226–00	23 – 6
3SP–22234–00	23 – 3
5NY–22241–00	23 – 22
5XE–22242–00	23 – 19
1C3–22253–50	23 – 10
1C3–22253–L1	23 – 15
4AA–22259–40	23 – 8
4AA–22259–50	23 – 8
4AA–22259–70	23 – 8
4EW–22474–00	23 – 12
3JE–22475–00	23 – 11
5NY–22475–00	23 – 16
5UN–22898–60	31 – 12
1C3–22969–90	22 – 9
17D–23102–00	25 – 1
17D–23102–10	25 – 1
17D–23103–00	25 – 25
17D–23103–10	25 – 25
17D–23110–00	25 – 28
5XC–23111–00	25 – 22
	25 – 46
276–23114–00	25 – 24
	25 – 48
17D–23120–00	25 – 4
5XE–23125–L0	25 – 6
	25 – 30
17D–23136–00	25 – 2
	25 – 26
1C3–23141–A1	39 – 2
1C3–23141–B1	39 – 2
1C3–23141–C1	39 – 2
1C3–23141–D1	39 – 2
1C3–23141–E1	39 – 2
1C3–23141–F1	39 – 2
1C3–23141–G1	39 – 2
1C3–23141–H1	39 – 2
1C3–23141–J1	39 – 2

PART NO.	REF. NO.
2S2–23141–M1	25 – 21
	25 – 45
5XC–23141–N0	25 – 21
	25 – 45
1C3–23142–L0	25 – 20
	25 – 44
5XE–23144–L0	25 – 10
	25 – 34
17D–23145–00	25 – 8
	25 – 32
5XC–23146–10	25 – 7
	25 – 31
1AE–23147–00	25 – 18
	25 – 42
1C3–23147–L0	25 – 12
	25 – 36
17D–23153–00	25 – 3
	25 – 27
5XE–23153–L0	25 – 9
	25 – 33
2HH–23158–L0	25 – 23
	25 – 47
17D–2315H–50	25 – 52
17D–2315J–50	25 – 51
17D–2316A–00	25 – 13
	25 – 37
17D–2316A–10	25 – 13
	25 – 37
17D–23170–00	25 – 11
	25 – 35
17D–23170–10	25 – 11
	25 – 35
5XE–23171–L0	25 – 5
	25 – 29
5DH–23183–00	23 – 7
509–23184–L0	23 – 5
1C3–23188–L0	25 – 14
	25 – 38
1C3–23188–N0	25 – 15
	25 – 39
1C3–23188–P0	25 – 16
	25 – 40
1C3–23188–R0	25 – 17
	25 – 41
1C3–23190–L0	25 – 19
	25 – 43
17D–23340–50	25 – 49
17D–23389–50	24 – 16

PART NO.	REF. NO.
17D–2339E–10	24 – 15
17D–23416–50	24 – 3
17D–23435–10	24 – 6
18P–23441–00	24 – 8
17D–23442–00	24 – 9
17D–23466–00	25 – 54
17D–23467–00	25 – 55
17D–23485–50	24 – 13
17D–23591–50	19 – 42
17D–24110–50	26 – 1
3C5–2411B–20	20 – 17
17D–2412F–00	26 – 15
4EW–2412F–00	26 – 13
17D–24144–00	26 – 6
3FB–2415E–02	20 – 5
3FB–2415E–12	20 – 6
3FB–2415E–C1	20 – 5
4SR–2416E–00	20 – 7
5SF–24173–00	26 – 12
4KB–24181–00	6 – 19
17D–24181–50	26 – 17
17D–24182–50	26 – 27
3JD–24186–00	26 – 10
3XJ–24380–00	26 – 4
4DP–24500–01	26 – 18
4X8–24512–00	26 – 21
3AC–24523–00	26 – 22
3AJ–24534–01	26 – 19
5NY–24610–00	26 – 2
17D–2470F–00	27 – 2
17D–2470F–D0	27 – 2
17D–24710–00	27 – 1
17D–24710–D0	27 – 1
5NY–25104–00	28 – 7
5NY–25111–00	28 – 1
5NY–25117–00	28 – 3
5XC–25181–G0	28 – 14
5XC–25183–G0	28 – 15
5XC–25186–G0	28 – 16
56A–25195–00	28 – 9
5NY–25196–00	28 – 8
34P–25304–00	30 – 10
17D–2530S–00	30 – 22
17D–25311–00	30 – 1
17D–25317–00	30 – 2
17D–2531B–00	28 – 6
	28 – 6
	30 – 15

PART NO.	REF. NO.
17D–2531B–00	30 – 15
4XM–25364–00	30 – 20
17D–25381–00	30 – 27
17D–25388–00	30 – 23
17D–25389–00	30 – 24
4XM–25394–00	30 – 19
5SF–25394–00	28 – 13
5ET–25395–00	30 – 13
34P–25396–00	30 – 11
34P–25397–00	30 – 12
17D–25447–50	30 – 6
17D–25448–50	30 – 6
17D–25449–50	30 – 6
	30 – 6
17D–25450–50	30 – 6
17D–25451–50	30 – 6
	30 – 6
17D–25452–50	30 – 6
5CG–25715–00	33 – 9
	35 – 9
17D–25718–50	31 – 19
5XC–2580T–G0	29 – 3
17D–2580W–01	31 – 3
17D–2580W–11	31 – 3
5XC–2581T–G0	29 – 1
1UY–25824–51	31 – 7
1UY–25825–51	31 – 8
5UN–25827–60	31 – 11
5UN–25828–60	31 – 10
2S2–2582W–70	31 – 1
5MV–25833–00	33 – 16
17D–2583V–00	35 – 1
5XC–25849–G0	29 – 15
5UN–25852–50	35 – 5
5XC–25852–G0	33 – 7
5XC–25853–G0	33 – 10
5UN–25854–00	35 – 7
5XC–25854–G0	33 – 6
5UN–2585B–00	35 – 6
5CG–2585G–00	33 – 11
	35 – 10
5MV–25867–00	33 – 15
17D–25872–50	33 – 1
5XC–25873–L0	35 – 12
1C3–25876–50	35 – 17
1C3–25886–50	35 – 15
5MV–2589F–00	33 – 13
5UN–25914–00	31 – 17

PART NO.	REF. NO.
5DH–25914–50	31 – 15
3SP–25914–51	29 – 12
5DH–25916–00	29 – 10
	31 – 14
3JD–25917–00	29 – 13
	31 – 16
5DH–25919–00	29 – 6
5DH–25919–50	31 – 6
8CR–25924–00	31 – 13
3SP–25926–51	29 – 11
5DH–25933–00	29 – 9
1UY–25937–51	29 – 14
	31 – 18
5XC–26111–L1	32 – 1
17D–26124–00	32 – 14
5XC–26143–L0	32 – 15
5XC–26143–M0	32 – 15
5TJ–26240–C0	32 – 3
4GY–26241–00	32 – 2
4GY–26242–00	32 – 4
3Y1–26249–00	32 – 5
5BE–26281–00	32 – 6
5BE–26282–00	32 – 7
5SF–26287–10	32 – 9
17D–26302–50	32 – 10
17D–26334–50	37 – 12
17D–26335–50	32 – 11
17D–26337–00	37 – 5
5TA–26339–00	37 – 17
34P–26342–00	32 – 13
34P–26372–00	37 – 8
5XC–26372–G0	33 – 17
17D–27200–51	34 – 1
17D–27217–00	34 – 2
5UN–27217–00	35 – 8
5UN–27218–00	35 – 3
5UN–27222–00	35 – 4
34P–27311–00	34 – 16
17D–27411–00	34 – 9
17D–27421–00	34 – 10
17D–27491–50	31 – 21
5XC–28116–00	19 – 47
5TA–2814F–00	19 – 46
5ET–28166–10	19 – 45
5PG–2816R–00	20 – 18
5UL–82310–20	38 – 3
17D–82509–50	38 – 15
17D–82540–00	38 – 4

PART NO.	REF. NO.
17D–82911–00	37 – 1
17D–82913–00	37 – 10
5XD–82946–00	37 – 9
17D–83912–00	37 – 2
5XC–83922–L0	33 – 12
5TA–83941–00	37 – 11
17D–83976–00	37 – 18
5LP–84126–10	37 – 4
17D–85540–50	38 – 1
17D–85540–60	38 – 1
17D–85546–50	38 – 2
17D–85550–10	36 – 2
17D–85560–50	36 – 1
17D–85885–00	10 – 47
5XC–W0041–00	33 – 5
5UN–W0042–50	35 – 2
5XC–W0045–00	29 – 8
1C3–W0046–50	31 – 9
1C3–W0046–B0	31 – 9
5KM–W0047–10	29 – 5
5UN–W0047–50	31 – 5
1UY–W0048–50	29 – 7
5XC–W0057–00	29 – 4
5UN–W0057–50	31 – 4
5XC–W2587–00	33 – 4
90101–05005	37 – 7
90101–06041	18 – 4
90101–06044	14 – 14
90101–08006	30 – 25
90105–06027	1 – 6
90105–06064	21 – 13
	24 – 14
90105–06081	12 – 15
	12 – 19
	16 – 30
90105–06098	13 – 26
90105–06100	20 – 11
90105–06103	21 – 5
90105–06104	22 – 12
90105–06105	22 – 14
90105–06106	20 – 13
90105–06107	26 – 8
	31 – 22
90105–06110	31 – 20
90105–06111	6 – 22
	26 – 9
	31 – 23
90105–06127	18 – 16

PART NO.	REF. NO.
90105–06127	20 – 3
90105–06156	31 – 2
90105–06170	9 – 22
	24 – 17
	25 – 56
90105–06189	12 – 10
90105–08137	29 – 16
90105–08143	19 – 35
90105–08151	21 – 20
90105–08154	24 – 12
	25 – 50
90105–08224	11 – 15
	19 – 8
90105–08226	19 – 24
90105–08232	19 – 18
90105–09002	1 – 16
90105–09004	1 – 15
90105–10176	19 – 28
90105–10361	19 – 21
90105–10373	19 – 27
90109–06034	37 – 3
90109–06193	17 – 10
90109–06232	25 – 53
90109–08078	30 – 7
90110–05038	9 – 9
90110–06228	8 – 5
90110–08051	14 – 26
90111–06116	35 – 11
90116–06038	1 – 10
90119–06149	19 – 40
90119–06255	21 – 26
90119–08095	21 – 6
90119–08133	11 – 14
90122–06005	9 – 19
90149–05162	37 – 16
90149–06074	12 – 17
90149–06084	2 – 14
90149–06108	26 – 26
90149–06121	36 – 3
90149–10031	19 – 4
90151–06044	12 – 13
90151–06045	14 – 23
90151–06051	29 – 2
90154–05022	38 – 6
90159–06092	15 – 11
90170–14171	2 – 16
90170–16326	15 – 15
90179–06028	22 – 13

PART NO.	REF. NO.
90179–08019	30 – 26
90179–10658	19 – 22
	19 – 29
90179–12657	36 – 4
90179–16011	28 – 17
90179–18001	15 – 3
	16 – 28
90179–24004	24 – 7
90179–28015	24 – 4
90185–08008	30 – 8
90185–08009	19 – 19
90185–10012	23 – 23
90185–14010	22 – 31
90185–16002	22 – 16
90185–22011	30 – 28
90201–05017	11 – 3
90201–06085	20 – 14
90201–06104	20 – 12
90201–06108	20 – 4
90201–06571	6 – 23
90201–06630	21 – 23
90201–08043	19 – 20
90201–08044	34 – 7
90201–08045	19 – 12
90201–08048	14 – 25
	30 – 9
90201–080H1	15 – 18
90201–082A6	21 – 21
90201–08410	10 – 45
90201–08512	5 – 2
	5 – 5
90201–096J9	1 – 17
90201–10032	34 – 15
90201–10045	19 – 23
	19 – 30
90201–12166	7 – 13
90201–127E1	36 – 5
90201–14020	22 – 30
90201–15701	13 – 15
90201–16018	22 – 17
90201–162H4	14 – 11
90201–167P7	14 – 7
90201–177G4	14 – 17
90201–20685	14 – 3
90201–21014	22 – 23
90201–22013	15 – 13
90201–22022	30 – 29
90201–286K9	24 – 5

PART NO.	REF. NO.
90202–05193	26 – 25
90202–08045	10 – 5
90209–06096	9 – 18
90209–16011	22 – 22
90209–20008	16 – 4
	16 – 18
90209–23012	16 – 14
90215–14204	2 – 15
90215–16289	15 – 14
90215–20003	15 – 2
	16 – 27
90240–08120	34 – 6
90240–10004	34 – 11
90267–48084	11 – 8
90280–03006	2 – 11
90340–12007	1 – 7
90340–14015	13 – 4
90340–32006	13 – 2
90387–06065	6 – 21
90387–06105	24 – 1
90387–06150	21 – 25
90387–06161	21 – 28
90387–06259	20 – 2
90387–064X4	20 – 10
90387–08041	19 – 13
90387–086N4	19 – 17
90387–124F4	18 – 11
90387–14009	22 – 27
90387–16026	22 – 21
90387–18004	22 – 7
90387–18007	12 – 22
90387–18012	22 – 6
90387–20006	16 – 8
90387–22001	16 – 24
90387–225N2	32 – 12
90401–08006	8 – 11
90401–10015	8 – 9
90401–10172	33 – 3
	35 – 13
90430–06014	1 – 9
	5 – 12
90430–08119	8 – 12
90430–10005	33 – 2
	35 – 14
90430–10188	8 – 10
	12 – 7
90445–09220	26 – 3
90445–09251	26 – 5

PART NO.	REF. NO.
90445–11059	26 – 23
90445–14017	7 – 29
90450–17001	7 – 30
90450–22001	6 – 18
	7 – 22
90450–25001	6 – 15
90450–28001	6 – 16
90450–32003	6 – 17
90450–58006	9 – 3
90450–61002	9 – 10
90464–06004	38 – 13
90464–12045	26 – 28
90464–13073	38 – 8
90464–13077	38 – 7
	38 – 11
90464–15195	38 – 9
90464–16014	38 – 10
90464–45001	38 – 14
90465–08029	13 – 29
90465–10013	12 – 24
90467–090A2	6 – 5
90467–100A1	26 – 24
90467–140A4	1 – 21
90468–16001	34 – 8
90480–08608	30 – 21
90480–10068	9 – 21
90480–10289	21 – 24
90480–14433	21 – 27
90480–15012	6 – 20
90480–17008	26 – 7
90501–043E0	8 – 18
90501–052G5	18 – 6
90501–06022	17 – 3
90501–147A5	14 – 21
90501–160A2	14 – 6
90501–230A2	15 – 10
90506–16007	34 – 5
90508–26561	17 – 9
90508–28015	34 – 13
90508–28018	34 – 14
90508–291A8	18 – 12
90508–30743	14 – 9
91312–06020	6 – 8
91312–06025	7 – 6
	8 – 7
	9 – 2
91312–06045	12 – 3
91312–06055	12 – 4

PART NO.	REF. NO.
91312–06065	8 – 6
91312–06070	12 – 5
91316–04012	10 – 3
91317–06030	7 – 7
91402–20012	34 – 4
91402–25015	34 – 12
91808–16023	1 – 4
	1 – 5
91812–16001	13 – 19
91A20–05065	6 – 4
92012–05008	19 – 6
	19 – 43
92012–05012	37 – 14
92012–06010	19 – 33
	19 – 38
92012–06016	21 – 19
92902–06600	4 – 8
92902–10200	23 – 21
	24 – 10
93101–14164	13 – 14
93102–12106	5 – 7
93102–12224	15 – 24
	18 – 14
93102–18278	14 – 15
93102–26468	28 – 4
93102–28010	16 – 25
93102–32337	30 – 4
93106–22002	22 – 4
93109–11073	5 – 6
93109–22019	22 – 26
93109–25001	22 – 20
93109–28043	22 – 5
93210–07003	8 – 14
93210–07135	8 – 4
93210–09525	8 – 15
93210–09754	7 – 28
93210–10197	7 – 8
	7 – 19
	7 – 25
	12 – 20
93210–11073	34 – 3
93210–12010	8 – 16
93210–14369	13 – 5
	21 – 18
93210–16275	6 – 7
93210–16716	13 – 22
93210–17570	14 – 24
93210–19123	13 – 7

PART NO.	REF. NO.
93210–196A4	16 – 23
93210–21001	38 – 5
93210–32172	13 – 3
93210–47675	8 – 3
93300–60839	19 – 16
93306–00105	5 – 8
93306–00317	16 – 22
93306–00320	16 – 10
93306–20335	2 – 10
93306–20447	16 – 1
93306–20648	2 – 7
93306–27208	16 – 11
93306–90409	28 – 2
93306–90509	17 – 2
93306–90510	30 – 3
93310–63238	2 – 5
93311–32261	2 – 17
93315–32166	22 – 19
93315–32269	22 – 25
93317–11287	15 – 23
93317–22262	22 – 2
93332–00068	24 – 2
93332–00081	24 – 18
93340–21008	15 – 17
93342–22217	22 – 3
93410–20038	14 – 4
93410–22039	16 – 5
	16 – 19
93410–26067	16 – 15
93420–16086	2 – 21
93440–07182	5 – 3
	15 – 19
93440–10153	7 – 4
93440–41178	4 – 3
93503–08007	8 – 19
93507–32009	14 – 22
93511–32027	15 – 20
93603–16219	7 – 2
93604–10011	5 – 11
93608–33002	18 – 13
93612–16254	1 – 27
	12 – 2
9383B–13218	16 – 26
94108–21027	28 – 10
94110–19019	30 – 16
94209–21229	28 – 11
94210–19222	30 – 17
94316–19156	30 – 18

PART NO.	REF. NO.
94330–21084	28 – 12
94416–21034	28 – 5
94416–21045	28 – 5
	28 – 5
94418–19026	30 – 14
94418–19036	30 – 14
	30 – 14
94591–53114	4 – 4
94681–68001	30 – 31
94682–28001	30 – 31
94701–00410	1 – 13
94701–00411	1 – 13
94703–00410	1 – 13
94703–00411	1 – 13
95022–06010	1 – 8
	15 – 26
95022–06012	5 – 15
	8 – 17
95022–06016	7 – 27
95022–06020	37 – 13
95022–06025	4 – 11
	5 – 13
	7 – 17
	7 – 21
	7 – 24
	13 – 12
	13 – 24
95022–06035	1 – 28
	13 – 11
	13 – 20
	13 – 25
95022–06065	5 – 14
95022–08040	19 – 14
95022–10016	12 – 6
95302–05600	37 – 6
95602–05100	37 – 15
95602–10200	23 – 20
	24 – 11
95612–08620	1 – 11
95701–06500	33 – 14
95702–06500	1 – 26
95702–08500	1 – 12
97022–06016	4 – 7
97702–60016	20 – 16
98502–05010	35 – 16
98507–03008	26 – 20
98507–05020	32 – 8
98702–06020	26 – 16

PART NO.	REF. NO.
98702–06025	26 – 14
98706–04012	33 – 8
98902–06012	21 – 22
98902–06025	26 – 11
98980–06008	11 – 4
99001–08600	7 – 12
99009–12400	7 – 14
99009–16400	14 – 8
99009–17400	14 – 18
99009–22500	13 – 16
99009–42700	30 – 5
99530–08012	7 – 5
99530–08016	13 – 10
	13 – 27
99530–10114	7 – 9
	7 – 20
	7 – 26
	12 – 21
99530–10116	12 – 23
9Y581–92111	30 – 30
9Y581–92113	30 – 30
9Y582–28111	30 – 30
9Y582–28113	30 – 30

PART NO.	REF. NO.

PART NO.	REF. NO.