YAMAHA

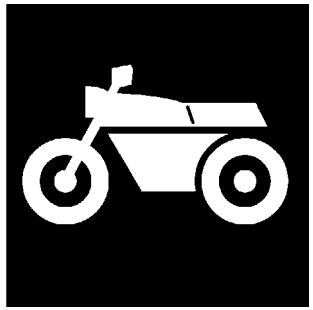

PARTS CATALOGUE
CATALOGO DE REPUESTOS

YW125 (37D1) C SOUTH AMERICA

1H37D-200S1

( )

YAMAHA
GENUINE
Parts & Accessories

YW125
CATALOGO DE REPUESTOS
©2008 por Yamaha Motor Co., Ltd.
1ª edición, junio 2008
Todos los derechos reservados.
Toda reproducción o uso no autorizado
sin el consentimiento escrito de
Yamaha Motor Co., Ltd.
quedan expresamente prohibidos
Impreso en Japón.

YW125
PARTS CATALOGUE
©2008 by Yamaha Motor Co., Ltd.
1st edition, June 2008
All rights reserved.
Any reprinting or unauthorized use
without the written permission of
Yamaha Motor Co., Ltd.
is expressly prohibited.
Printed in Japan.

PROLOGO

Este catálogo de repuestos corresponde a las piezas para el o los modelos que figuran en la página de portada. Al formular el pedido de repuestos, se ruega citar este catálogo y especificar correctamente el número y el nombre de las piezas.

1. Las modificaciones y agregados que se hayan realizado después de la edición de este Catálogo de Repuestos, serán anunciados en las Informaciones de Recambios.
   Es recomendable que se hagan las correcciones necesarias en el Catálogo de Repuestos de acuerdo con las Informaciones de Recambios.

2. Abreviaciones
   En este. Catálogo de Repuestos se emplean las siguientes abreviaciones.

   "UR" Usar el número de partes especificado
   "UN" Usar la cantidad necesaria
   "AP" Piezas sustitutivas
   "LM" Fabricación local (Hay que pedir los repuestos en las cercanías)
   "F#" Nº de bastidor (Nº aplicable a la máquina)
   "O/S" Sobredimensionado

3. La cantidad de componentes para el montaje
   - Los componentes, suministrados como conjunto, se describen con un punto (.) que precede al nombre del parte como se indica a continuación.
   - La numeración que aparece a la derecha de cada descripción indica la cantidad de partes por cada unidad de conjunto.

CODIGO Nº	DESCRIPCION	CANT.	OBSERVACIONES
2F5–83310–60	ENSAMBLAJE DE LA LUZ	2	
115–83311–60	.BOMBILLA (6V–18W)	1	

4. Los colores de los componentes se indican como sigue en la columna de "OBSERVACIONES".

CODIGO Nº	DESCRIPCION	CANT.	OBSERVACIONES
2N4–24110–00–X5	COMP. DEL TANQUE	2	MXR
3J1–24240–10	.GRAFICO, DEL TANQUE	1	PARA MXR

5. Debe tenerse en cuenta que las ilustraciones sirven como guia para la búsqueda de los números de partes y no deben usarse para el montaje. Durante el montaje, se recomienda usar el manual de taller correspondiente.

6. EL asterisco (*) antes del número de referencia indica los elementos modificados después de la primera edición.

FOREWORD

This Parts Catalogue is related to the parts for the model(s) on the cover page. When you are ordering replacement parts, please refer to this Parts Catalogue and quote both part numbers and part names correctly.

1. Modifications or additions which have been made after the issue of the Parts Catalogue will be announced in the Parts News.
   It is advisable that you make the necessary corrections to the Parts Catalogue according to the Parts News.

2. Abbreviations
   The following abbreviations are used in this Parts Catalogue.

   “UR” Use specified parts number.
   “UN” Use as many as needed.
   “AP” Alternate Parts
   “LM” Locally Made (Parts need to be ordered locally)
   “F#” Frame No. (Applicable machine No.)
   “O/S” Over Size

3. The number of components for assembly
   - Parts, which are to be supplied in an assembly, are listed with a dot (.) in front of the part name as shown below.
   - The numeral appearing to the right of each component part indicates the quantity of parts for each assembly unit.

PART NO.	DESCRIPTION	Q’TY	REMARKS
2F5–83310–60	FRONT FLASHER LIGHT ASSY	2	
115–83311–60	.BULB (6V–18W)	1	

4. Applicable colours of graphics are represented in the “REMARKS” as shown below.

PART NO.	DESCRIPTION	Q’TY	REMARKS
2N4–24110–00–X5	FUEL TANK COMP.	2	MXR
3J1–24240–10	.GRAPHIC, FUEL TANK	1	FOR MXR

5. Note that the illustrations for reference in finding parts numbers are not to be used for assembling. When assembling, please use the applicable service manual.

6. The asterisk (*) before a reference number indicates modified items after the first edition.

7. Números de serie

Nº de Serie del bastidor

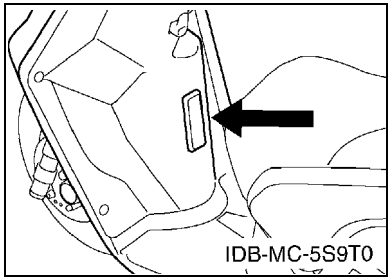

Nº de Serie del motor

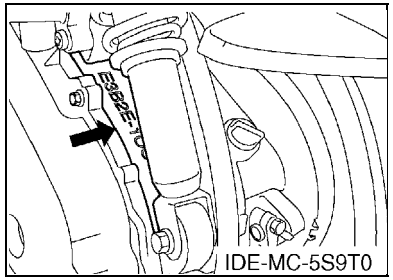

8. Códigos de color aplicables (El símbolo (*) muestra el color de modelo.)

Abreviatura	Nombre de color	Código de color
CMY(*)	CALM YELLOW	00AL
DPBMC(*)	DEEP PURPLISH BLUE METALLIC C	0564
LGB	LOW GLOSS BLACK	0098
MDS	MIDNIGHT SILVER	007M
SL	SILVER	0035
SMX(*)	BLACK METALLIC X	0903
VRM5(*)	VIVID RED METALLIC 5	0632
YB	YAMAHA BLACK	0033

9. Nº de serie inicial aplicable

Nº de Serie del bastidor

Nº de serie	Nombre de la columna de cantidades	Código de Modelo

Nº de Serie del motor

Nº de serie	Nombre de la columna de cantidades	Código de Modelo

7. Applicable Serial No.

Frame Serial No.

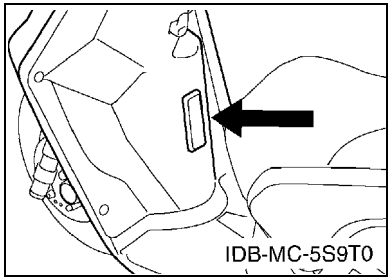

Engine Serial No.

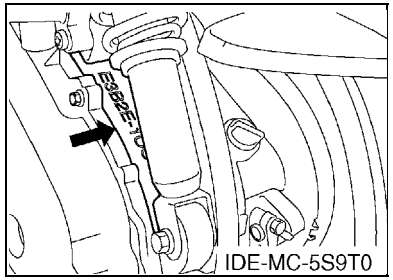

8. Applicable Colour Code (The (*) mark shows Model colour.)

Abbreviation	Colour Name	Colour Code
CMY(*)	CALM YELLOW	00AL
DPBMC(*)	DEEP PURPLISH BLUE METALLIC C	0564
LGB	LOW GLOSS BLACK	0098
MDS	MIDNIGHT SILVER	007M
SL	SILVER	0035
SMX(*)	BLACK METALLIC X	0903
VRM5(*)	VIVID RED METALLIC 5	0632
YB	YAMAHA BLACK	0033

9. Applicable Starting Serial No.

Frame Serial No.

Serial No.	Name Of Q'ty Column	Model Code

Engine Serial No.

Serial No.	Name Of Q'ty Column	Model Code

CONTENIDO

MOTOR

CILINDRO 1
CIGUENAL & PISTON 3
VALVULA 4
CUBIERTA DE AIRE & VENTILADOR 5
BOMBA DE ACEITE 6
ADMISION 7
CARBURADOR 8
DESCARGA 10
CARTER 11
ARRANQUE 13
EMBRAGUE 14
TRANSMISION 16

SHASIS

CUADRO 17
GUARDABARRO DELANTERO 18
CUBIERTA LATERAL 19
BRAZO TRASERO & SUSPENSION 20
HORQUILLA DELANTERA 21
DEPOSITO DE COMBUSTIBLE 23
ASIENTO 24
RUEDA DELANTERA 25
CALIBRE FRENO DELANTERA 26
RUEDA TRASERA 27
MANILLAR & CABLE 28
CILINDRO MAESTRO DELANTERO 29
SOPORTE & APOYAPIE 30
PATA PROTEGIDA 31
BOVEDA 1 33
GENERADOR 34
MOTOR DE ARRANQUE 35
LUZ DE DESTELLADOR 36
MEDIDOR 37
FARO DELANTERO 38
LUZ DE COLA 39
INTERRUPTOR DE MANILLAR&PALANC 40
EQUIPO ELECTRICO 1 41

INDICE

INDICE NUMERICO 42

CONTENTS

ENGINE

CYLINDER 1
CRANKSHAFT & PISTON 3
VALVE 4
AIR SHROUD & FAN 5
OIL PUMP 6
INTAKE 7
CARBURETOR 8
EXHAUST 10
CRANKCASE 11
STARTER 13
CLUTCH 14
TRANSMISSION 16

CHASSIS

FRAME 17
FRONT FENDER 18
SIDE COVER 19
REAR ARM & SUSPENSION 20
FRONT FORK 21
FUEL TANK 23
SEAT 24
FRONT WHEEL 25
FRONT BRAKE CALIPER 26
REAR WHEEL 27
STEERING HANDLE & CABLE 28
FRONT MASTER CYLINDER 29
STAND & FOOTREST 30
LEG SHIELD 31
COWLING 1 33
GENERATOR 34
STARTING MOTOR 35
FLASHER LIGHT 36
METER 37
HEADLIGHT 38
TAILLIGHT 39
HANDLE SWITCH & LEVER 40
ELECTRICAL 1 41

INDEX

NUMERICAL INDEX 42

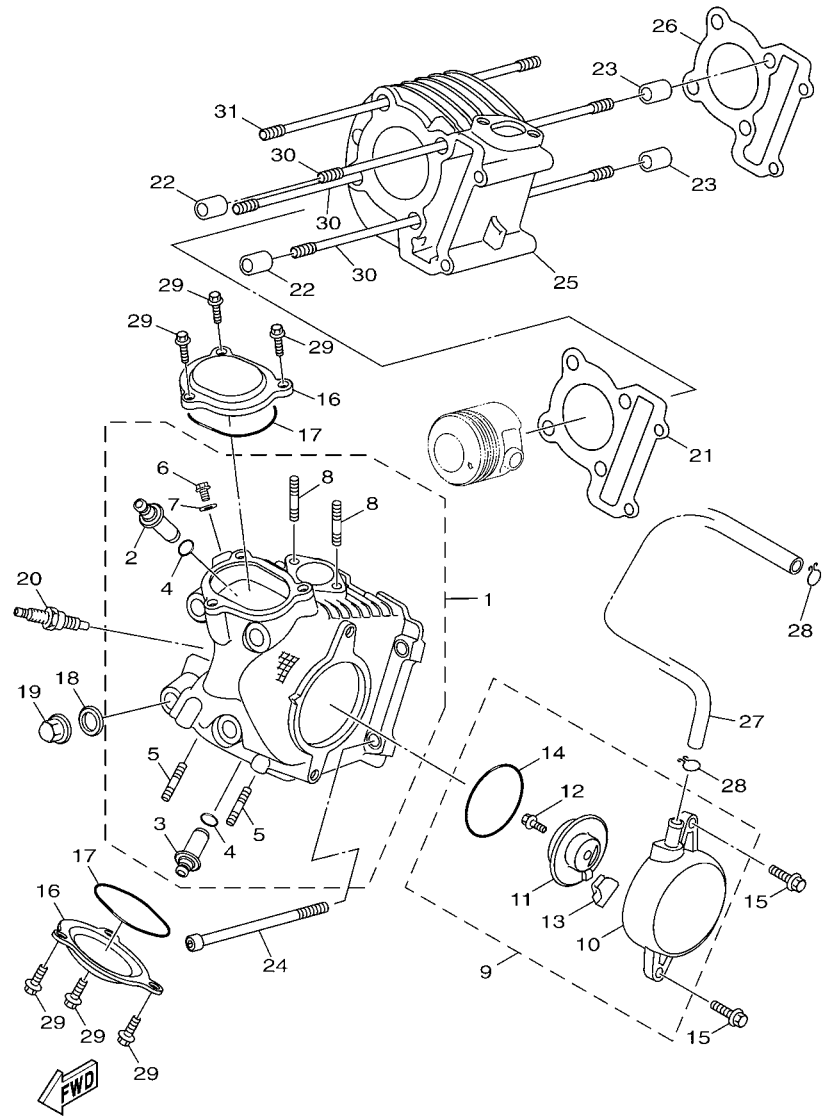

24S1210-H010

FIG. 1 CILINDRO — CYLINDER

REF. Nº	CODIGO Nº PART NO.	DESCRIPCION DESCRIPTION	37D1					OBSERVACIONES REMARKS
1	24P–E1102–00	CULATA DE CILINDRO COMPLETA CYLINDER HEAD ASSY	1					
2	1P3–E1133–10	.GUIA DE VALVULA 1 .GUIDE, VALVE 1	2					
3	1P3–E1134–10	.GUIA DE VALVULA 2 .GUIDE, VALVE 2	2					
4	93210–09802	.ANILLO O .O-RING	4					
5	90116–08806	.ESPARRAGO .BOLT, STUD	2					
6	90153–06803	.TORNILLO HEXAGONAL .SCREW, HEXAGON	1					
7	90430–06014	.JUNTA .GASKET	1					
8	95617–06625	.PERNO DE PUNTAL .BOLT, STUD	2					
9	5ML–E1160–00	RESPIRADERO COMPLETO BREATHER ASSY	1					
10	5ML–E1185–00	.CUBIERTA CULATA CIL.LAT.1 .COVER, CYLINDER HEAD SIDE 1	1					
11	5ML–E1165–00	.PLACA RESPIRADERO .PLATE, BREATHER	1					
12	97527–06512	.PERNO CON ARANDELA .BOLT, WITH WASHER	1					
13	4CW–E1155–00	.SELLO LABERINTO .SEAL, LABYRINTH	1					
14	93210–71462	.ANILLO O .O-RING	1					
15	95027–06020	PERNO, DE BRIDA BOLT, FLANGE	2					
16	5ML–E1186–00	CUBIERTA CULATA CIL.LAT.2 COVER, CYLINDER HEAD SIDE 2	2					
17	93210–54008	ANILLO O O-RING	2					
18	90201–08609	ARANDELA PLANA WASHER, PLATE	4					
19	90176–08816	TUERCA CORONA NUT, CROWN	4					
20	94700–00881	BUJIA (DENSO U22ESR-N) PLUG, SPARK (DENSO U22ESR-N)	1					
21	5ML–E1181–00	JUNTA, DE CULATA 1 GASKET, CYLINDER HEAD 1	1					
22	91810–14807	PASADOR DE CLAVIJA PIN, DOWEL	2					
23	91810–14807	PASADOR DE CLAVIJA PIN, DOWEL	2					
24	91317–06100	PERNO BOLT	2					
25	5ML–E1311–20	CILINDRO 1 CYLINDER 1	1					
26	5ML–E1351–20	JUNTA, DE CILINDRO GASKET, CYLINDER	1					
27	1P5–E4987–00	TUBO HOSE	1					

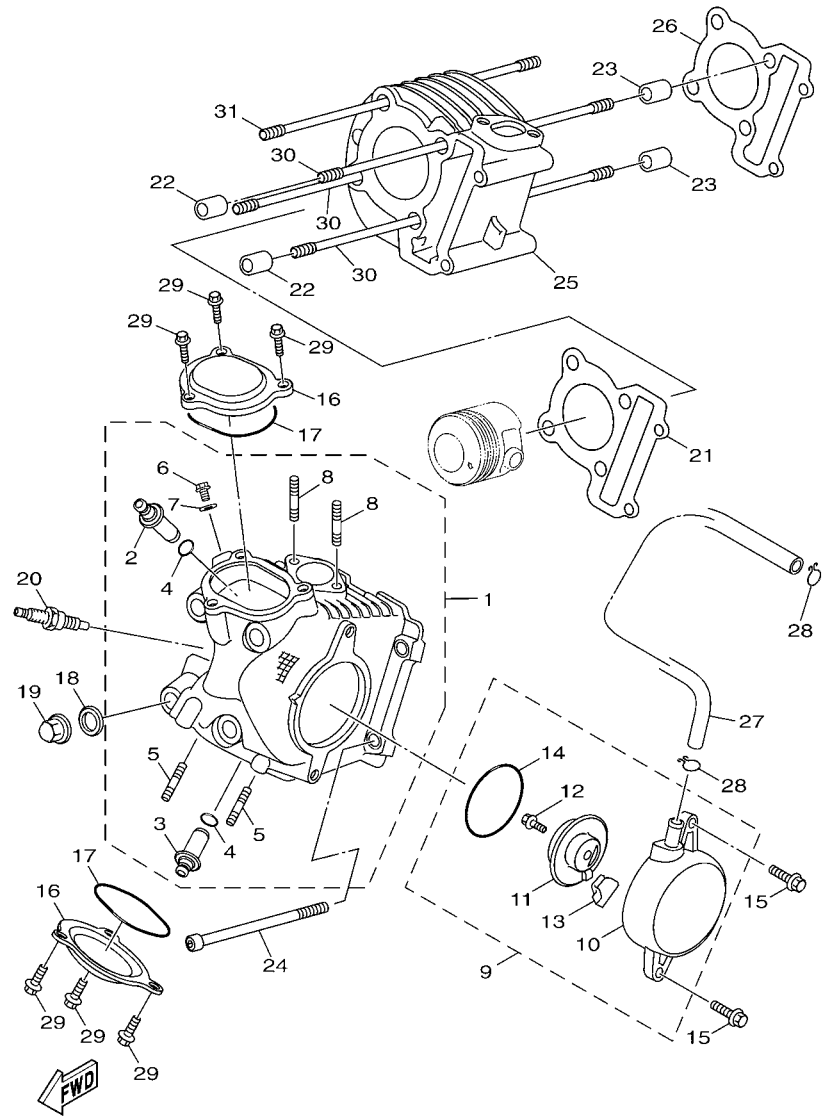

FIG. 1 CILINDRO — CYLINDER

REF. Nº	CODIGO Nº PART NO.	DESCRIPCION DESCRIPTION	37D1					OBSERVACIONES REMARKS
28	90467–13042	PRESILLA CLIP	2					
29	95027–06016	PERNO, DE BRIDA BOLT, FLANGE	6					
30	5ML–E1391–00	PERNO PERNO PRISIONERO 1 BOLT, STUD 1	3					
31	5ML–E1392–00	PERNO PRISIONERO 2 BOLT, STUD 2	1					

FIG. 2 CIGUENAL & PISTON — CRANKSHAFT & PISTON

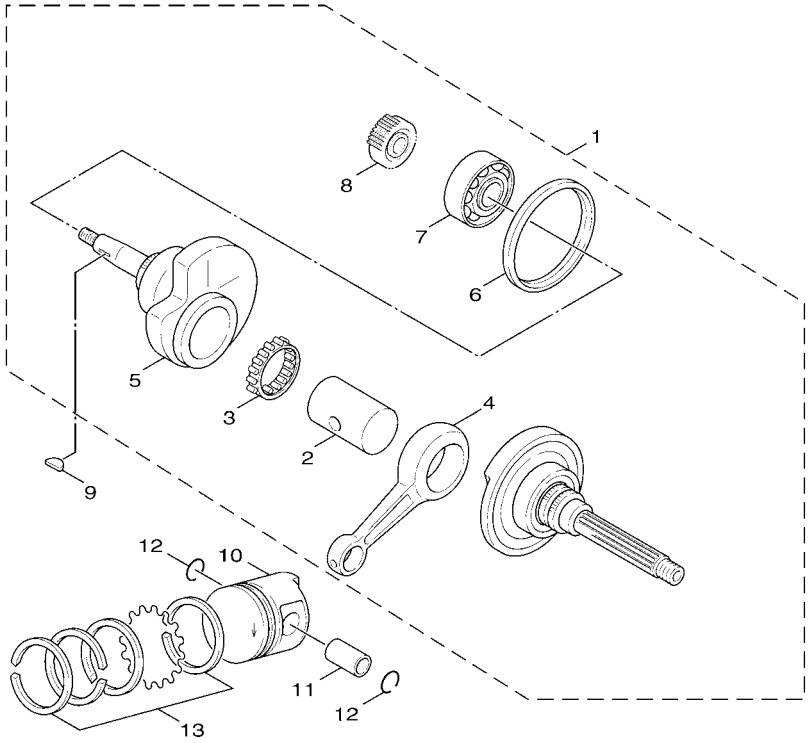

5TY5414-E020

REF. Nº	CODIGO Nº PART NO.	DESCRIPCION DESCRIPTION	37D1					OBSERVACIONES REMARKS
1	5S9–E1400–00	CIGUENAL COMPLETO CRANKSHAFT ASSY	1					
2	5ML–E1681–00	.PASADOR MANIVELA 1 .PIN, CRANK 1	1					
3	93310–528Y9	.COJINETE DE RODILLOS .BEARING	1					
4	5LW–E1651–00	.BIELA .ROD, CONNECTING	1					
5	1P3–E1422–00	.MANIVELA 2 .CRANK 2	1					
6	5ML–E3452–00	.CUBIERTA FILTRO ROTOR .COVER, ROTOR FILTER	1					
7	93306–372Y3	.COJINETE .BEARING	1					
8	5ML–E3324–00	.ENGRANAJE TRACC. DE BOMBA .GEAR, PUMP DRIVE	1					
9	90280–03045	CUNA WOODRUFF KEY, WOODRUFF	1					
10	5ML–E1631–10	PISTON (NORMA) PISTON (STD)	1					
11	5LW–E1633–00	PASADOR, PISTON PIN, PISTON	1					
12	93450–16068	SEGURO CIRCLIP	2					
13	4C6–E1603–00	JUEGO DE ANILLOS (NORMA) PISTON RING SET (STD)	1					

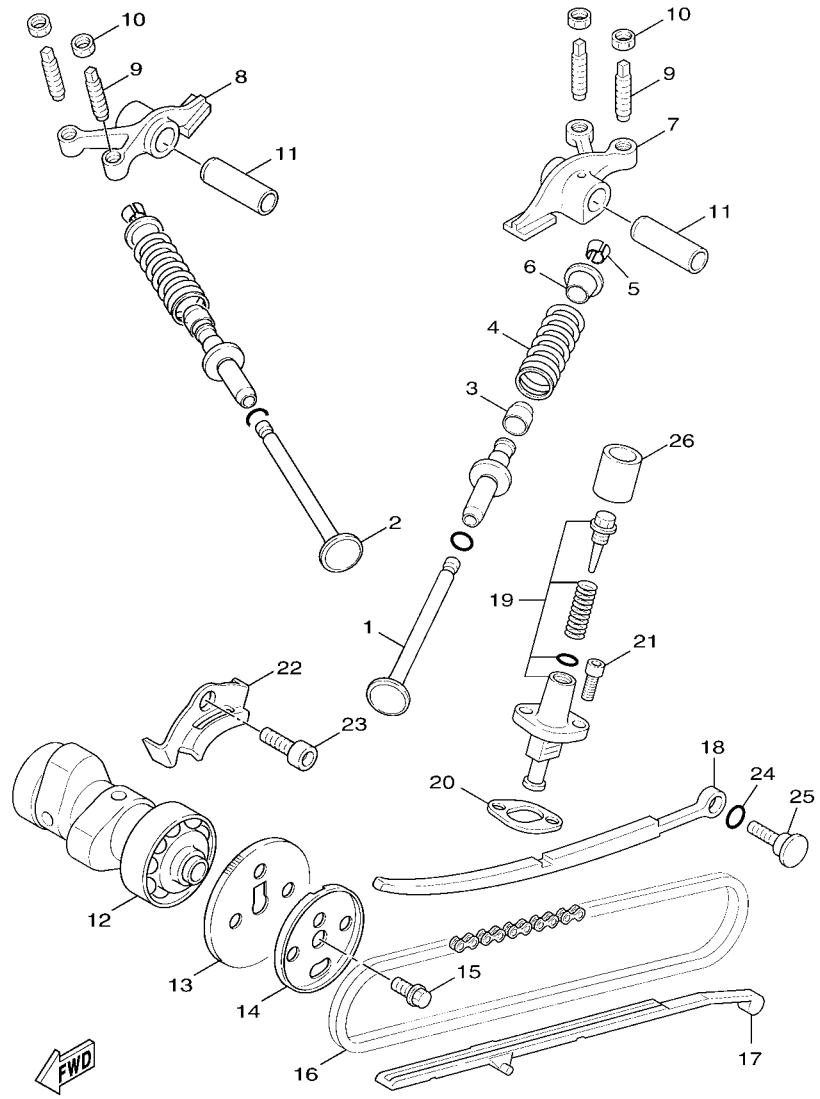

FIG. 3 VALVULA VALVE

REF. Nº	CODIGO Nº PART NO.	DESCRIPCION DESCRIPTION	37D1					OBSERVACIONES REMARKS
1	4C6–E2111–00	VALVULA DE ADMISION VALVE, INTAKE	2					
2	4C6–E2121–00	VALVULA DE ESCAPE VALVE, EXHAUST	2					
3	5ML–E2119–00	SELLO DE ACEITE VALVULA SEAL, VALVE STEM	4					
4	5ML–12113–00	RESORTE VALVULA INTERNA SPRING, VALVE INNER	4					
5	5WG–E2118–00	SEGURO DE VALVULA COTTER, VALVE	8					
6	4C6–E2117–00	RETEN RESORTE DE VALVULA RETAINER, VALVE SPRING	4					
7	1P3–E2151–00	BRAZO DE BALANCIN DE VALVULA ARM, VALVE ROCKER	1					
8	1P3–E2161–00	BRAZO DE BALANCIN DE VALVULA ARM, VALVE ROCKER 2	1					
9	5FM–E2159–00	TORNILLO DE AJUSTE DE VALVULA SCREW, VALVE ADJUSTING	4					
10	90170–05800	TUERCA NUT	4					
11	5HK–E2156–00	EJE DE BALANCIN SHAFT, ROCKER 2	2					
12	5S9–E2170–01	ARBOL DE LEVAS COMPLETO 1 CAMSHAFT ASSY 1	1					
13	5LW–E2176–00	CATALINA DE CADENA SPROCKET, CAM CHAIN	1					
14	5ML–E1145–00	PLACA RESPIRADERO 2 PLATE, BREATHER 2	1					
15	95817–08016	TORNILLO BOLT, FLANGE	1					
16	94568–75094	CADENA CHAIN	1					
17	5ML–E2231–00	TOPE DE GUIA 1 GUIDE, STOPPER 1	1					
18	5ML–E2241–00	TOPE DE GUIA 2 GUIDE, STOPPER 2	1					
19	5ML–E2210–00	TENSOR CADENA DE LEVA TENSIONER ASSY, CAM CHAIN	1					
20	4DH–E2213–01	EMPAQUE DE CAJA TENSOR GASKET, TENSIONER CASE	1					
21	91317–06016	PERNO BOLT	2					
22	5ML–E111F–00	PLACA PLATE	1					
23	91317–06012	PERNO BOLT	1					
24	93210–15862	ANILLO O O-RING	1					
25	4CW–E2157–00	PERNO BOLT	1					
26	4CW–E2232–00	AMORTIGUADOR DAMPER	1					

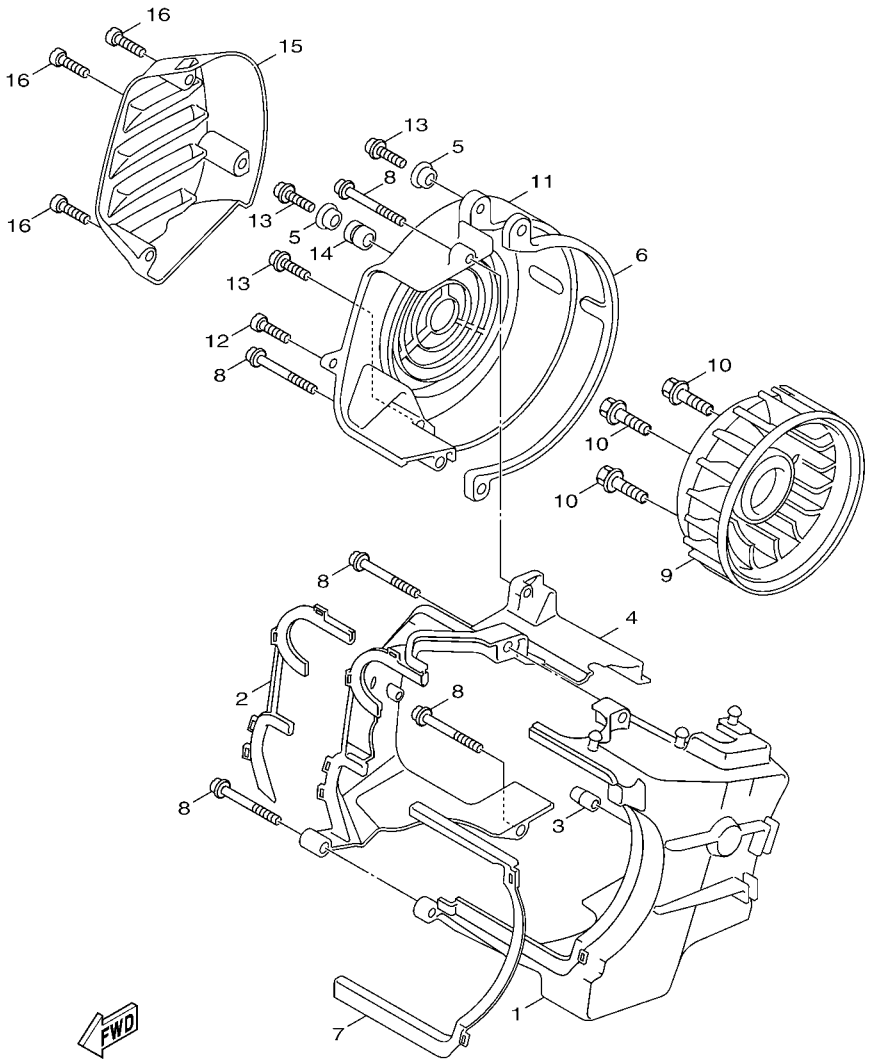

FIG. 4 CUBIERTA DE AIRE & VENTILADOR AIR SHROUD & FAN

REF. Nº	CODIGO Nº PART NO.	DESCRIPCION DESCRIPTION	37D1					OBSERVACIONES REMARKS
1	5ML–E2651–00	CUBIERTA DE PASO DE AIRE 1 AIR SHROUD, CYLINDER 1	1					
2	5ML–E2668–00	AMORTIGUADOR DE CUBIERTA 3 DAMPER, AIR SHROUD 3	1					
3	3KW–E3569–00	TAPON CIEGO PLUG, BLIND	1					
4	5ML–E2652–00	CUBIERTA DE PASO DE AIRE 2 AIR SHROUD, CYLINDER 2	1					
5	90387–068F9	ESPACIADOR COLLAR	3					
6	5ML–E2658–00	AMORTIGUADOR DE CUBIERTA 1 DAMPER, AIR SHROUD 1	1					
7	5ML–E2659–00	AMORTIGUADOR DE CUBIERTA 2 DAMPER, AIR SHROUD 2	1					
8	97707–60530	TORNILLO ROSCA HEMBRA SCREW, TAPPING	5					
9	5TY–E2611–00	VENTILADOR FAN	1					
10	90119–06857	TORNILLO CON ARANDELA BOLT, WITH WASHER	4					
11	5ML–E2653–01	CUBIERTA DE PASO DE AIRE 3 AIR SHROUD, CYLINDER 3	1					
12	97707–60516	TORNILLO ROSCA HEMBRA SCREW, TAPPING	1					
13	97607–06220	TORNILLO CAB CON PLANA C/ARAN SCREW,WITH WASHER	3					
14	90480–12497	TAPON GROMMET	1					
15	5S9–E262H–00	GUIA 1 GUIDE 1	1					
16	97707–60520	TORNILLO ROSCA HEMBRA SCREW, TAPPING	3					

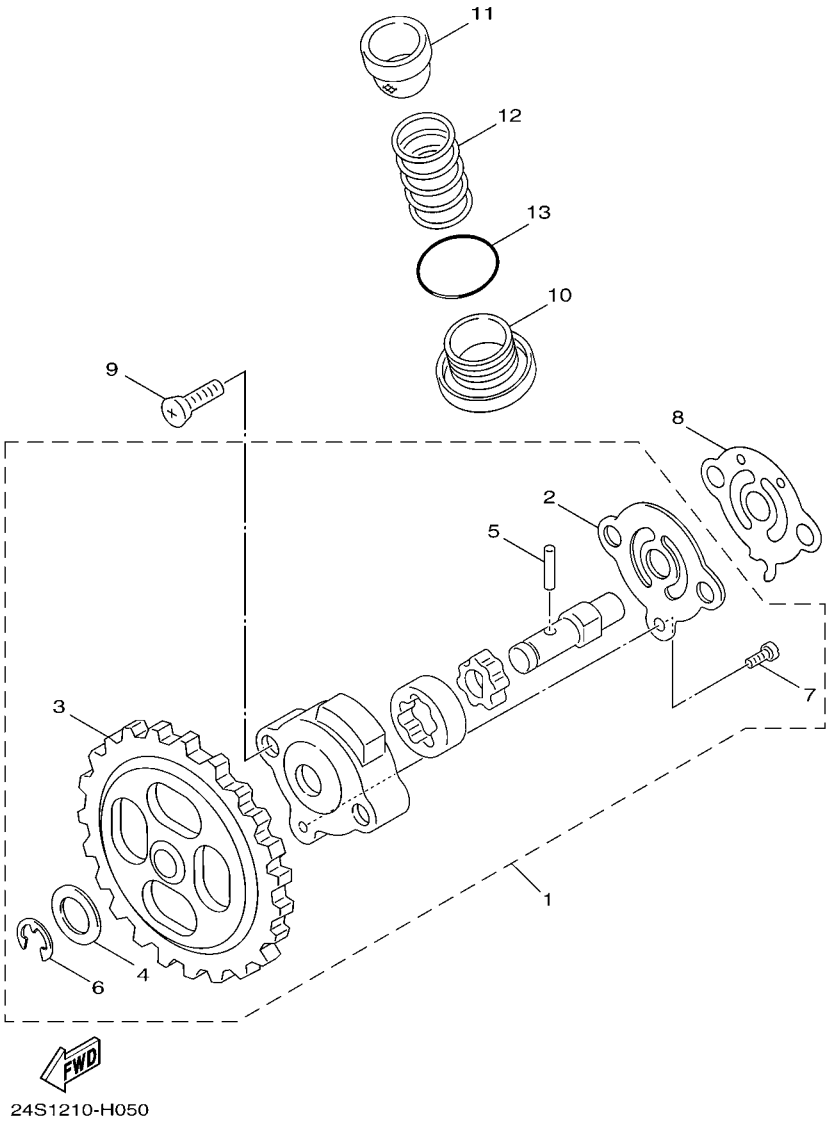

FIG. 5 BOMBA DE ACEITE OIL PUMP

REF. Nº	CODIGO Nº PART NO.	DESCRIPCION DESCRIPTION	37D1					OBSERVACIONES REMARKS
1	1P3–E3300–00	BOMBA DE ACEITE COMPLETA OIL PUMP ASSY	1					
2	1P3–E3316–00	.CUBIERTA DE BOMBA .COVER, PUMP	1					
3	1P3–E3325–00	.ENGRANAJE IMPULSOR DE BOMBA 1 .GEAR, PUMP DRIVEN	1					
4	1P3–E3318–00	.ARANDELA .WASHER	1					
5	1P3–E3362–00	.RODILLO .ROLLER	1					
6	1P3–E3364–00	.SEGURO .CIRCLIP	1					
7	5ST–E3365–00	.TORNILLO DE CABEZA CON PLANA .SCREW PAN HEAD	1					
8	5ML–E3475–00	EMPAQUE GASKET	1					
9	98507–05020	TORNILLO DE CABEZA PLANA SCREW, PAN HEAD	2					
10	5ML–E5351–20	TAPON DE DRENAJE PLUG, DRAIN	1					
11	5ML–E3411–00	FILTRO DE ACEITE STRAINER, OIL	1					
12	90501–16004	RESORTE DE COMPRESION SPRING, COMPRESSION	1					
13	93210–29800	ANILLO O O-RING	1					

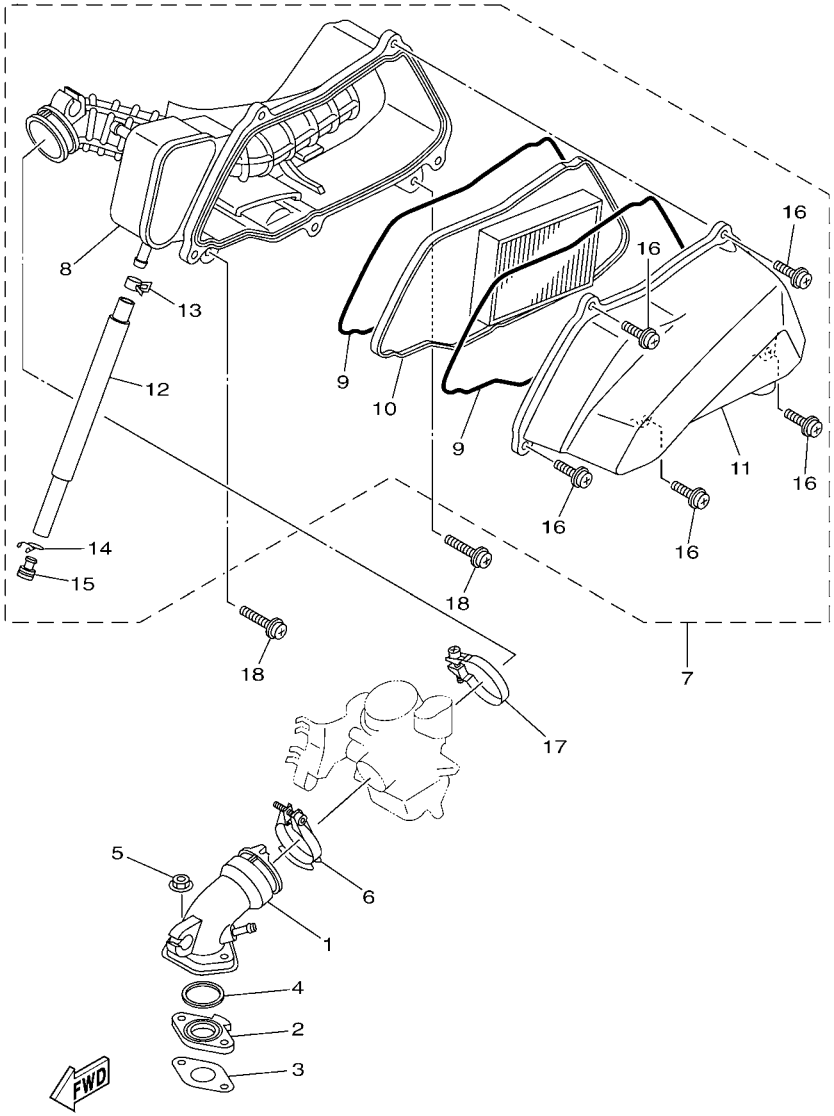

24S1210-H060

FIG. 6 ADMISION INTAKE

REF. Nº	CODIGO Nº PART NO.	DESCRIPCION DESCRIPTION	37D1					OBSERVACIONES REMARKS
1	24P–E3585–00	MULTIPLE MANIFOLD	1					
2	5ML–E3595–00	TOBERA JOINT	1					
3	5ML–E3556–20	EMPAQUE GASKET, MANIFOLD	1					
4	93210–27800	ANILLO O O-RING	1					
5	95707–06500	TUERCA DE BRIDA NUT, FLANGE	2					
6	5ML–E3474–00	BANDA BAND	1					
7	24P–E4410–00	FILTRO DE AIRE COMPLETO AIR CLEANER ASSY.	1					
8	24P–WE441–00	.CAJA COMPLETO FILTRO DE AIRE .AIR CLEANER CASE COMP.	1					
9	5S9–E4467–00	.SELLO .SEAL	2					
10	5S9–E4451–00	.ELEMENTO DEL FILTRO DEL AIRE .ELEMENT, AIR CLEANER	1					
11	5S9–WE442–00	.ELEMENTO DE FILTRO DE AIRE .ELEMENT, AIR CLEANER	1					
12	5S9–E443E–00	.TUBO, DRENAJE .PIPE, DRAIN	1					
13	90467–13813	.PRESILLA .CLIP	1					
14	90467–12052	.PRESILLA .CLIP	1					
15	90338–11820	.TAPON .PLUG	1					
16	97607–06220	.TORNILLO CAB CON PLANA C/ARAN .SCREW,WITH WASHER	5					
17	5ML–E3575–00	BANDA BAND	1					
18	97607–06230	TORNILLO CAB CON PLANA C/ARAN SCREW,WITH WASHER	2					

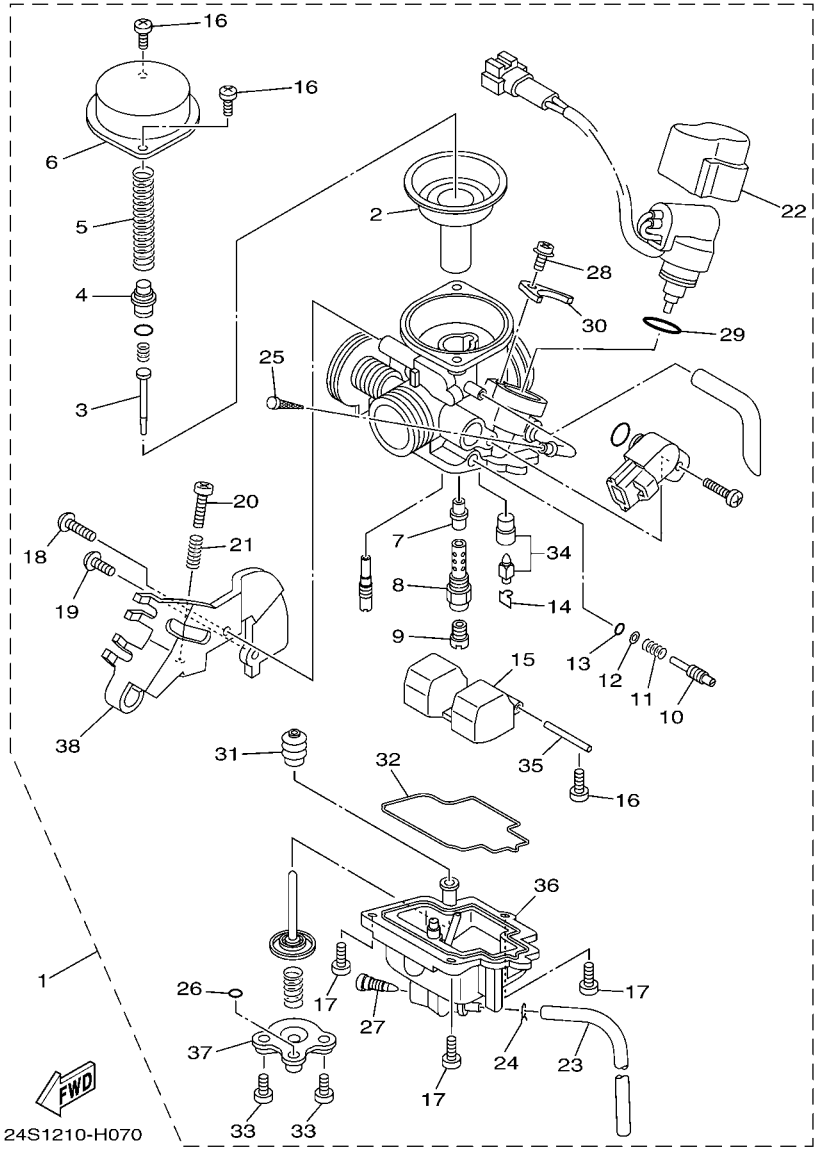

FIG. 7 CARBURADOR CARBURETOR

REF. Nº	CODIGO Nº PART NO.	DESCRIPCION DESCRIPTION	37D1					OBSERVACIONES REMARKS
1	24P–E4901–00	CARBURADOR COMPLETO 1 CARBURETOR ASSY 1	1					
2	24P–E4940–00	.DIAFRAGMA COMPLETO .DIAPHRAGM ASSY	1					
3	5TY–E4916–00	.AGUJA DE SURTIDOR .NEEDLE	1					
4	5TY–E4936–00	.ASIENTO DE RESORTE .SEAT, SPRING	1					
5	24P–E4933–00	.RESORTE DE DIAFRAGMA .SPRING, DIAPHRAGM	1					
6	5TY–E4958–00	.CUBIERTA DE DIAFRAGMA .COVER, DIAPHRAGM	1					
7	5TY–E4947–00	.INYECTOR DE AGUJA .JET, NEEDLE	1					
8	24P–E414G–00	.AEUJA DE CARB. .PIPE, MAIN BLEED	1					
9	24P–E4943–28	.INYECTOR PRINCIPAL (#105) .JET, MAIN (#105)	1					
10	24P–E4211–00	.TORNILLO DE AJUSTE DE PILOTO .SCREW, PILOT ADJUSTING	1					
11	4JH–14160–00	.BOBINA .COIL, SPRING	1					
12	3TJ–14952–40	.ARANDELA .WASHER	1					
13	3TJ–14562–40	.ANILLO O .O-RING	1					
14	663–14159–00	.PRESILLA .CLIP	1					
15	5TY–E4985–00	.BOIA .FLOAT	1					
16	688–14592–00	.TORNILLO .SCREW	3					
17	98502–04012	.TORNILLO .SCREW, PAN HEAD	3					
18	5TY–E4245–00	.TORNILLO DE GUIA .SCREW, GUIDE	1					
19	5TY–E4245–10	.TORNILLO DE GUIA .SCREW, GUIDE	1					
20	5TY–E4922–00	.TORNILLO DE OBTURADOR .SCREW, THROTTLE	1					
21	5JG–14531–00	.RESORTE TORNILLO AJUSTE .SPRING, ADJUST SCREW	1					
22	5TY–E4967–00	.CUBIERTA .COVER	1					
23	24P–E4196–00	.TUBO DE DRENASE .PIPE	1					
24	5BE–14937–00	.PRESILLA .CLIP	1					
25	5TY–E4994–00	.FILTRO .NET, FILTER	1					
26	3TJ–14536–40	.EMPAQUE .GASKET	1					
27	3TJ–14191–40	.TORNILLO, DE DRENAJE .PLUG, DRAIN	1					

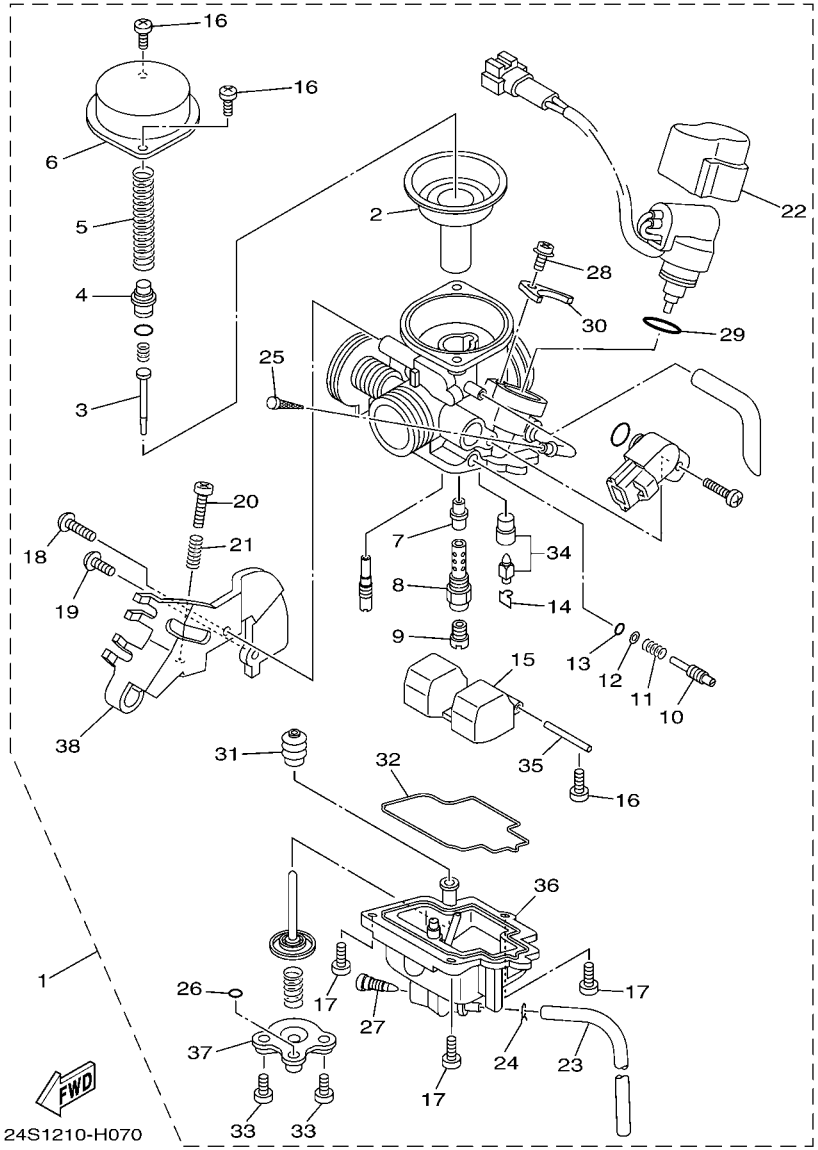

FIG. 7 CARBURADOR CARBURETOR

REF. Nº	CODIGO Nº PART NO.	DESCRIPCION DESCRIPTION	37D1					OBSERVACIONES REMARKS
28	5TY–E4871–00	.TORNILLO .SCREW	1					
29	5ML–E4854–00	.ANILLO-O .O-RING	1					
30	5ML–E4945–00	.PLACA .PLATE	1					
31	5ML–E4969–00	.TAPA .CAP	1					
32	5TY–E4984–00	.EMPAQUE CAMARA DE BOIA .GASKET, FLOAT CHAMBER	1					
33	5ML–E4592–00	.TORNILLO .SCREW	2					
34	5ML–E4590–00	.VALVULA DE AGUJA COMPLETA .NEEDLE VALVE ASSY	1					
35	5ML–E4386–00	.PASADOR DE BOIA .PIN, FLOAT	1					
36	24P–E4980–00	.CUERPO CAMARA DE BOIA .BODY, FLOAT CHAMBER	1					
37	5ML–E4958–00	.CUBIERTA DE DIAFRAGMA .COVER, DIAPHRAGM	1					
38	5UA–E4926–00	.SOPORTE DE OBTURADOR 1 .BRACKET, THROTTLE 1	1					

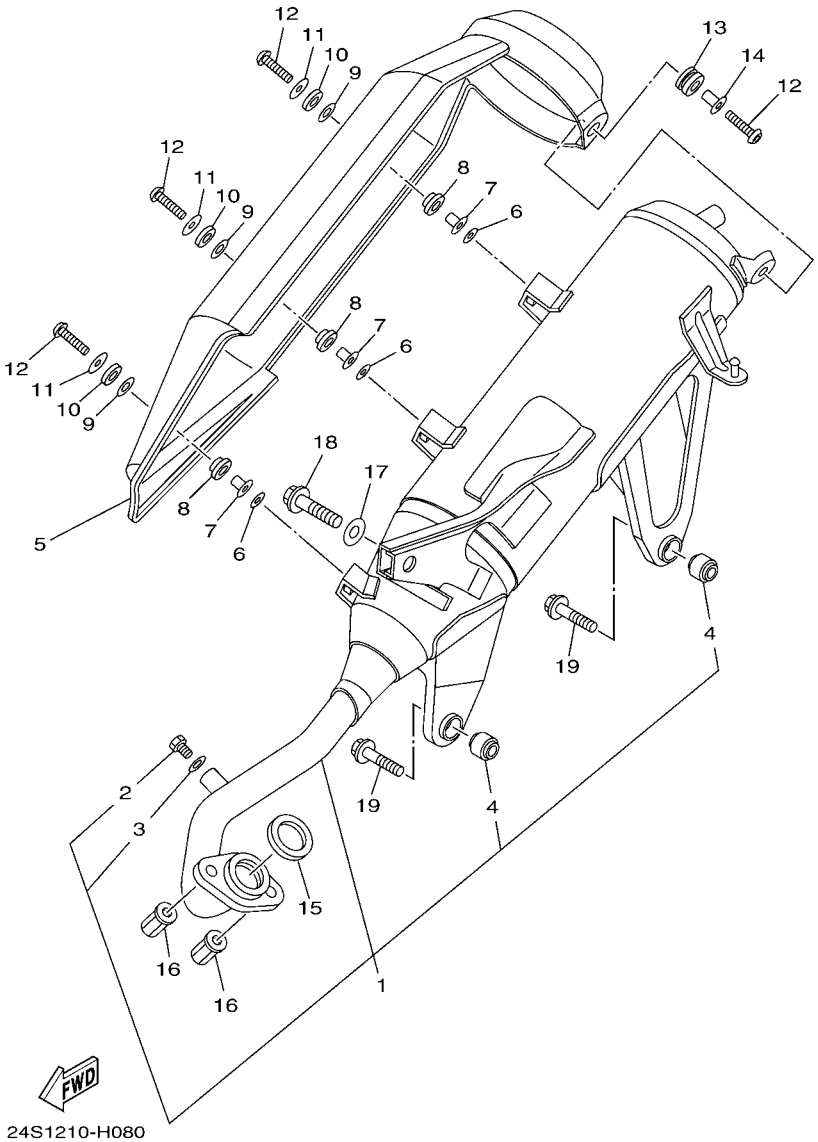

FIG. 8 DESCARGA EXHAUST

REF. Nº	CODIGO Nº PART NO.	DESCRIPCION DESCRIPTION	37D1					OBSERVACIONES REMARKS
1	24P–E4610–00–98	TUBO DE ESCAPE COMPLETO 1 EXHAUST PIPE ASSY 1	1					LGB LGB
2	97080–06008	.PERNO .BOLT	1					
3	92990–06600	.ARANDELA PLANA .WASHER, PLATE	1					
4	5ML–E4737–10	.AMORTIGUADOR DE SILENCIADOR .DAMPER, MUFFLER	2					
5	24P–E4708–00	PROTECTOR COMPLETA PROTECTOR ASSY	1					
6	4CW–E4766–00	ARANDELA DE PROTECTOR WASHER, PROTECTOR	3					
7	5JS–E4779–00	COLLAR COLLAR	3					
8	5JS–E4445–00	TAPON PROTECTOR GROMMET	3					
9	5JS–E4759–00	ARANDELA WASHER	3					
10	5JS–E4617–00	ARANDELA WASHER	3					
11	90201–06055	ARANDELA PLANA WASHER, PLATE	3					
12	90111–06801	TORNILLO BOLT,HEX. SOCKET BUTTON	4					
13	90480–14810	TAPON GROMMET	1					
14	90387–061N6	ESPACIADOR COLLAR	1					
15	4DH–14613–00	JUNTA, TUBO DE ESCAPE GASKET, EXHAUST PIPE	1					
16	90179–08804	TUERCA NUT	2					
17	90201–101J1	ARANDELA PLANA WASHER, PLATE	1					
18	95817–10035	TORNILLO BOLT, FLANGE	1					
19	90105–08835	TORNILLO BOLT, FLANGE	2					

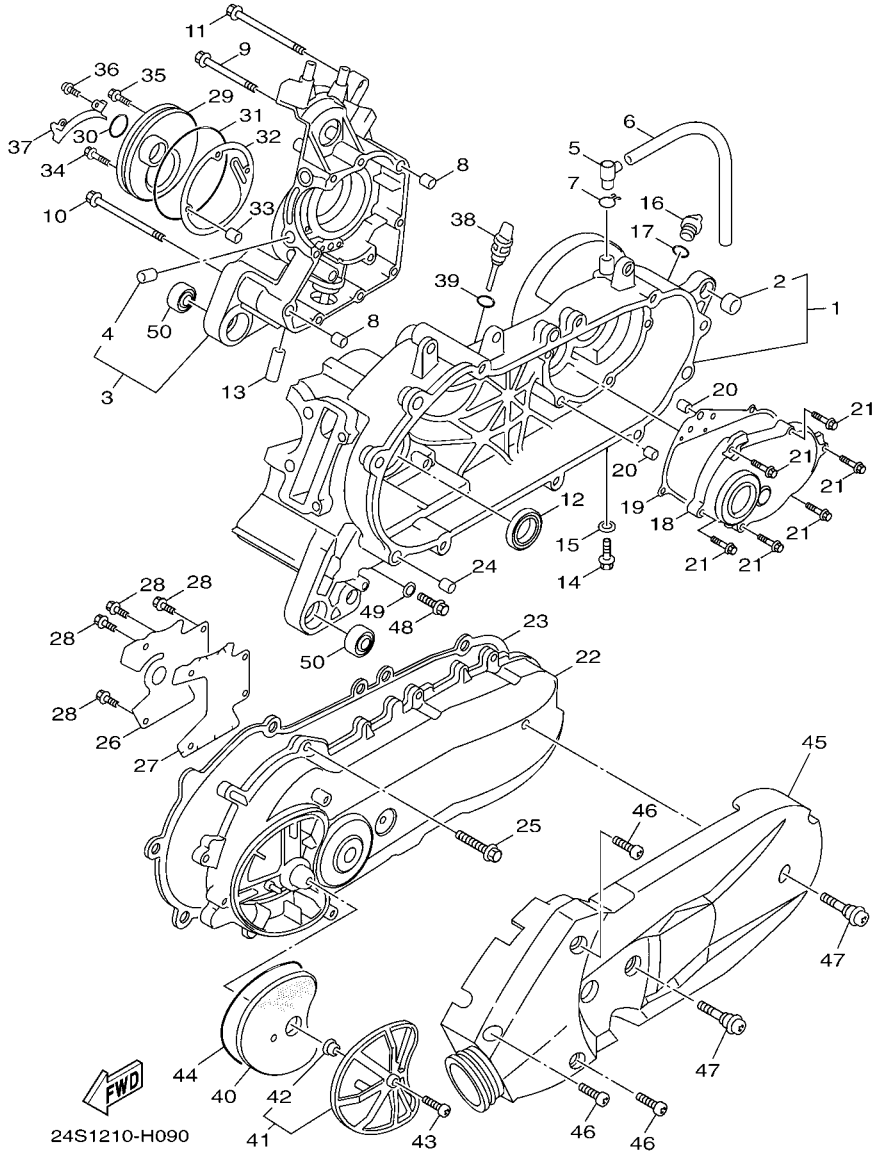

FIG. 9 CARTER — CRANKCASE

REF. Nº	CODIGO Nº PART NO.	DESCRIPCION DESCRIPTION	37D1					OBSERVACIONES REMARKS
1	5S9–WE511–00	CARTER, MANIVELA 1 CRANKCASE 1	1					
2	4X6–F2216–00	.BUJE DEL AMORTIGUADOR TRASERO .BUSH, REAR SHOCK ABSORBER	1					
3	5S9–WE512–00	CARTER 2 CRANKCASE 2	1					
4	5ML–E5138–00	.BOQUILLA 1 .NOZZLE 1	1					
5	5CA–E5371–00	RESPIRADERO BREATHER	1					
6	90446–13803	TUBO RESEIRADERO HOSE	1					
7	90467–12052	PRESILLA CLIP	1					
8	91810–14807	PASADOR DE CLAVIJA PIN, DOWEL	2					
9	90105–06808	TORNILLO BOLT, FLANGE	6					
10	90105–06810	TORNILLO BOLT, FLANGE	1					
11	90105–06817	TORNILLO BOLT, FLANGE	1					
12	93102–22843	SELLO ACEITE OIL SEAL	1					
13	5ML–E3416–00	TUBO DE ACEITE 1 PIPE, OIL 1	1					
14	95817–08016	TORNILLO BOLT, FLANGE	1					
15	90430–08816	JUNTA GASKET	1					
16	4Y4–E5363–00	TAPON DE ACEITE PLUG, OIL	1					
17	93210–14805	ANILLO O O-RING	1					
18	5S9–E5421–00	TAPA DE CARTER DERECHA COVER, CRANKCASE 2	1					
19	5S9–E5461–00	JUNTA TAPA CARTER DERECHO 2 GASKET, CRANKCASE COVER 2	1					
20	91810–14807	PASADOR DE CLAVIJA PIN, DOWEL	2					
21	95027–06030	PERNO, DE BRIDA BOLT, FLANGE	8					
22	24P–E5411–01	CUBIERTA DE CARTER 1 COVER, CRANKCASE 1	1					
23	5S9–E5451–10	EMPAQ DE CUBIERTA DE CARTER GASKET, CRANKCASE COVER 1	1					
24	91810–14807	PASADOR DE CLAVIJA PIN, DOWEL	2					
25	95027–06025	PERNO, DE BRIDA BOLT, FLANGE	9					
26	5ML–E5191–00	PLACA PLATE	1					
27	5ML–E5455–00	EMPAQUE 1 GASKET 1	1					

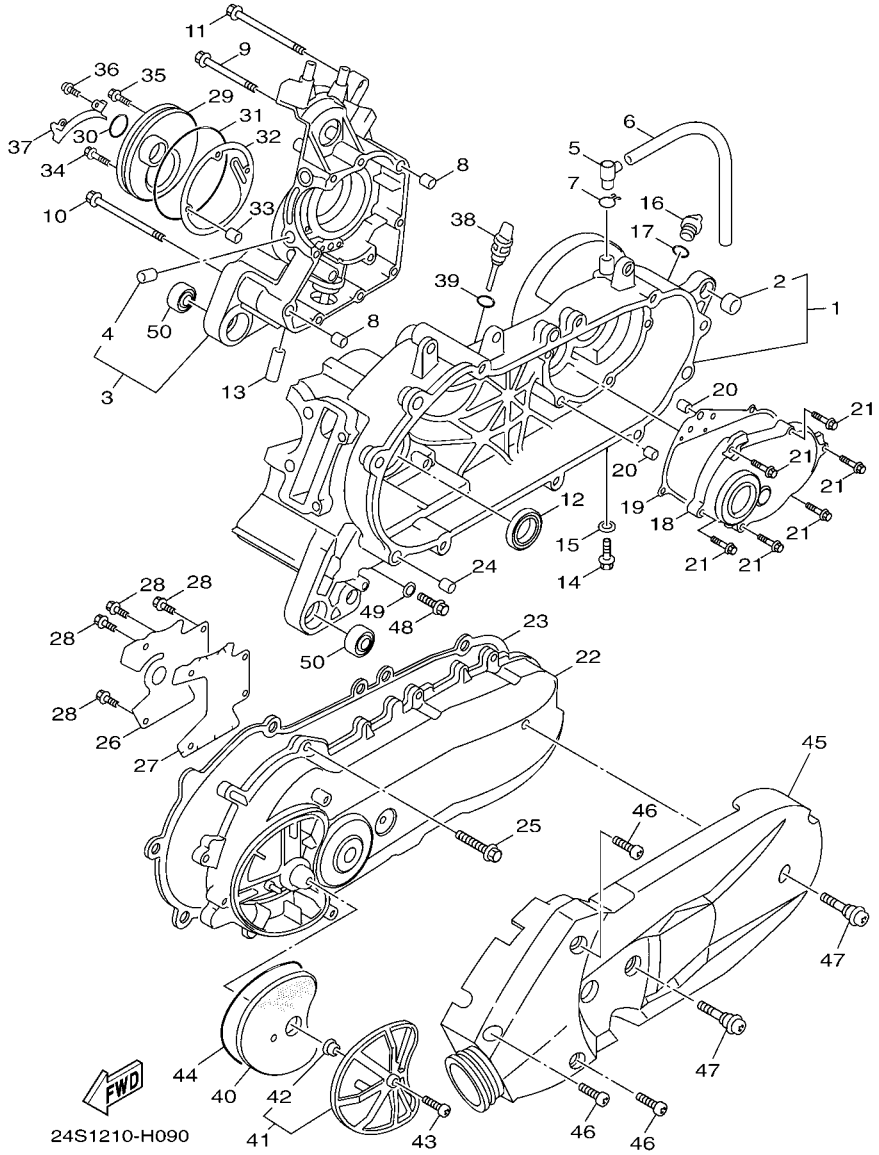

FIG. 9 CARTER — CRANKCASE

REF. Nº	CODIGO Nº PART NO.	DESCRIPCION DESCRIPTION	37D1					OBSERVACIONES REMARKS
28	95027–06010	PERNO, DE BRIDA BOLT, FLANGE	4					
29	5ML–E5417–00	CUBIERTA DE TAPA COVER, CAP	1					
30	93102–19293	SELLO ACEITE OIL SEAL	1					
31	93211–07801	ANILLO O O-RING	1					
32	5ML–E5453–00	EMPAQ GASKET	1					
33	99480–05010	PASADOR PIN	1					
34	90105–06809	TORNILLO BOLT, FLANGE	2					
35	90105–06807	TORNILLO BOLT, FLANGE	1					
36	90105–06806	TORNILLO BOLT, FLANGE	1					
37	5ML–E5113–00	PLACA PLATE	1					
38	5S9–E5362–00	TAPON DEL NIVEL DE ACEITE PLUG, OIL LEVEL	1					
39	5ML–E3769–00	ANILLO O O-RING	1					
40	5ML–E5407–00	ELEMENTO 1 ELEMENT 1	1					
41	5ML–E5404–00	COJINETE DE RODILLOS GUIDE, ELEMENT	1					
42	90387–06819	.ESPACIADOR .COLLAR	1					
43	98907–06016	TORNILLO DE LIGAR SCREW, BIND	1					
44	5ML–E5472–00	SELLO DE CONDUCTO DE AIRE SEAL, AIR DUCT	1					
45	24P–XE543–00	CUBIERTA DE CARTER 3 COVER, CRANKCASE 3	1					
46	98907–06020	TORNILLO DE LIGAR SCREW, BIND	3					
47	4DM–E5481–00	PERNO 1 BOLT 1	2					
48	90340–12802	TORNILLO, DE DRENAJE PLUG, STRAIGHT SCREW	1					
49	90201–12172	ARANDELA PLANA WASHER, PLATE	1					
50	93306–003Y4	COJINETE BEARING	2					

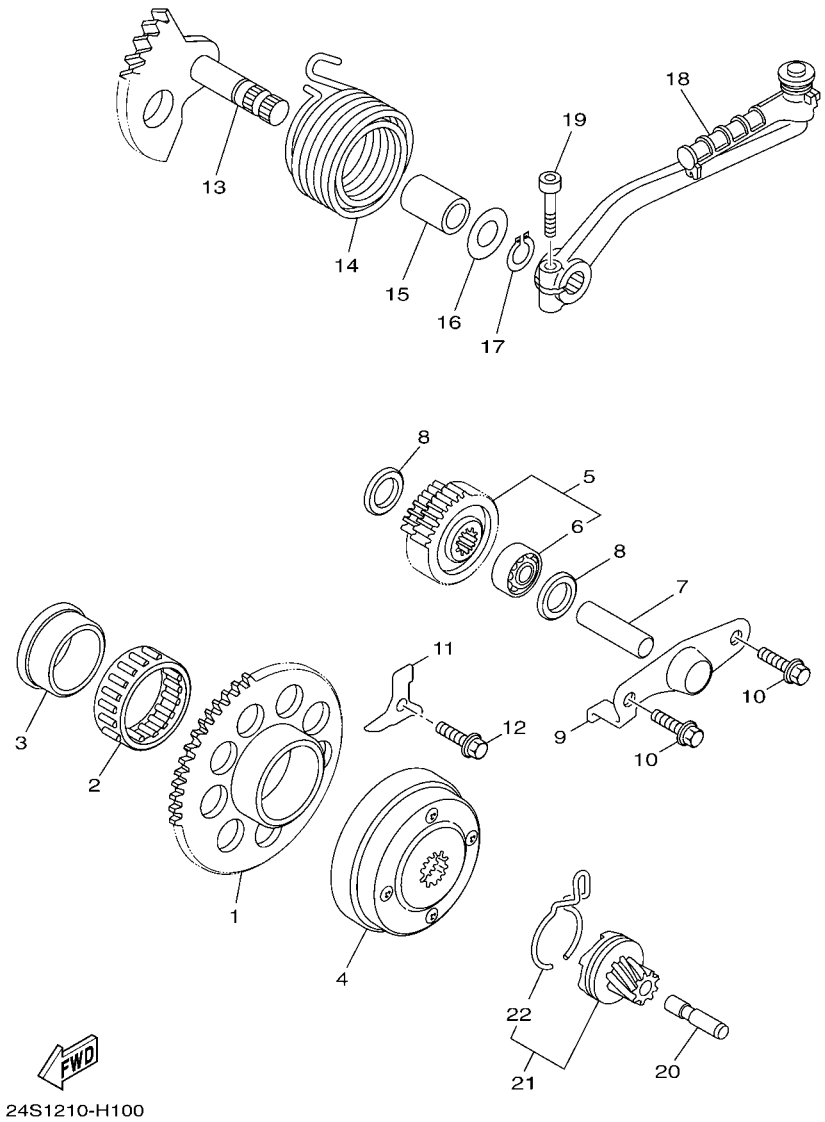

FIG. 10 ARRANQUE STARTER

REF. Nº	CODIGO Nº PART NO.	DESCRIPCION DESCRIPTION	37D1					OBSERVACIONES REMARKS
1	5S9–E5524–00	RUEDA DE ARRANQUE WHEEL, STARTER	1					
2	93310–450X2	COJINETE DE RODILLOS BEARING	1					
3	5LW–E5538–00	COPA 2 BOSS, GEAR 2	1					
4	5TY–E5570–01	EMBRAGUE DEL ARRANQUE COMPLETA STARTER CLUTCH ASSY	1					
5	5S9–E5650–00	ENGRENAJE NEUTRO COMPLETO IDLE GEAR ASSY	1					
6	93315–110Y6	.COJINETE DE RODILLOS .BEARING	1					
7	5CA–E5521–00	EJE 1 SHAFT 1	1					
8	90201–108A3	ARANDELA PLANA WASHER, PLATE	2					
9	5S9–E5532–00	PLACA DE ENGRENAJE NEUTRO PLATE, IDLE GEAR	1					
10	95027–06012	PERNO, DE BRIDA BOLT, FLANGE	2					
11	5TY–E5645–00	CUNA EJE PEDAL ARRANQUE SHIM, KICK SHAFT	1					
12	95027–06012	PERNO, DE BRIDA BOLT, FLANGE	1					
13	5ML–E5601–00	EJE DE ARR. DE PIE COMPL KICK SHAFT ASSY	1					
14	90508–32609	RESORTE DE TORSION SPRING, TORSION	1					
15	90380–15817	CASQUILLO SOLIDO BUSH, SOLID	1					
16	90201–155G5	ARANDELA PLANA WASHER, PLATE	1					
17	99009–15400	PRESILLA REDONDA CIRCLIP	1					
18	5ML–E5620–00	PEDAL DE ARRANQUE COMPLETO KICK CRANK ASSY	1					
19	91317–06030	PERNO BOLT	1					
20	5ML–E5659–00	EJE SHAFT	1					
21	5ML–E5670–00	PINON DE PEDAL COMPLETA 2 KICK PINION ASSY 2	1					
22	5ML–E5673–00	.PRESILLA .CLIP	1					

FIG. 11 EMBRAGUE CLUTCH

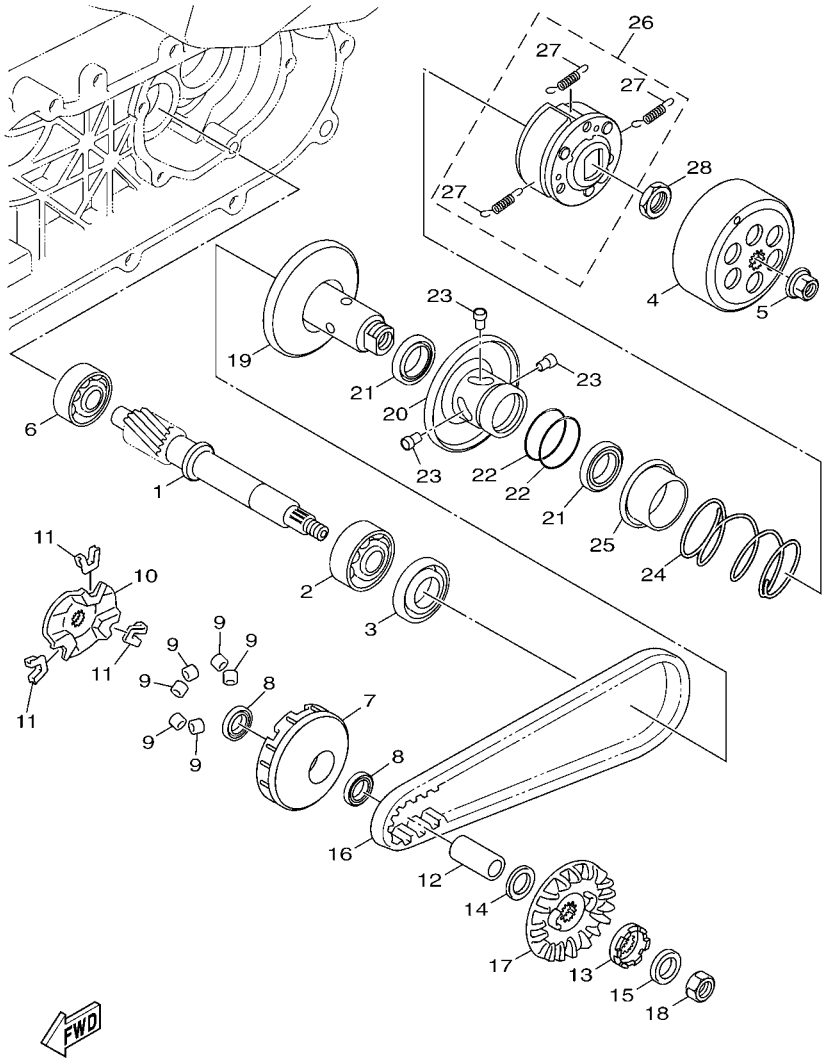

REF. Nº	CODIGO Nº PART NO.	DESCRIPCION DESCRIPTION	37D1					OBSERVACIONES REMARKS
1	5CA–E6111–01	ENGRANAJE TRACC.PRIMARIA GEAR, PRIMARY DRIVE	1					
2	93306–272X0	COJINETE BEARING	1					
3	93102–22800	SELLO ACEITE OIL SEAL	1					
4	4CW–E6611–00	CAJA DE EMBRAGUE COMPLETO CLUTCH HOUSING COMP.	1					
5	90179–14427	TUERCA NUT	1					
6	93306–203YS	COJINETE BEARING	1					
7	5ML–E7620–02	ROLDANA PRIMARIA MOVIL PRIMARY SLIDING SHEAVE COMP.	1					
8	93101–21170	SELLO ACEITE OIL SEAL	2					
9	24P–E7632–00	CONTRAPESO WEIGHT	6					
10	5ML–E7623–00	LEVA CAM	1					
11	4CW–E7653–00	CORREDERA SLIDER	3					
12	90387–16801	ESPACIADOR COLLAR	1					
13	5ML–E5657–00	EMBRAQUE SIN RETORNO CLUTCH, ONEWAY	1					
14	90208–12050	ARANDELA DE RESORTE CONICO WASHER, CONICAL SPRING	1					
15	90201–168S9	ARANDELA PLANA WASHER, PLATE	1					
16	5S9–E7641–00	CORREA EN V V-BELT	1					
17	4HP–E7611–00	PISCO FIXADOR DE POREA SHEAVE, PRIMARY FIXED	1					
18	95307–12700	TUERCA NUT	1					
19	4CW–E7660–01	ROLDANA SECUNDARIA FIJA COMPL. SECONDARY FIXED SHEAVE COMP.	1					
20	5S9–E7670–00	ROLDANA SECUNDARIA CORREDIZA SECONDARY SLIDING SHEAVE	1					
21	93104–41119	SELLO ACEITE OIL SEAL	2					
22	93210–43800	ANILLO O O-RING	2					
23	4CW–E7664–00	PASADOR DE GUIA PIN, GUIDE	3					
24	90501–45801	RESORTE DE COMPRESION SPRING, COMPRESSION	1					
25	5TY–E7644–01	ASIENTO DE RESORTE SEAT,SPRING	1					
26	1P5–E6620–01	PORTADOR DE EMBRAGUE COMPLETO CLUTCH CARRIER ASSY	1					
27	1P5–E6626–00	.RESORTE CONTRAPESO EMBRAGUE 1 .SPRING, CLUTCH WEIGHT 1	3					

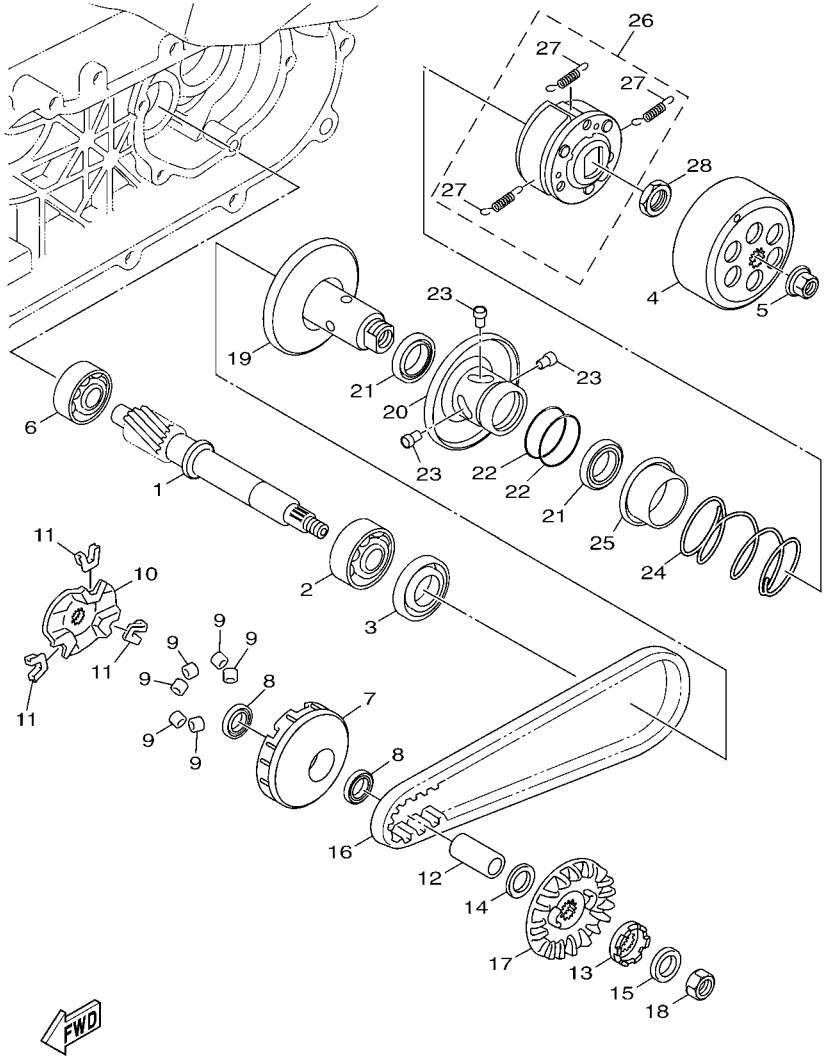

FIG. 11 EMBRAGUE CLUTCH

REF. Nº	CODIGO Nº PART NO.	DESCRIPCION DESCRIPTION	37D1					OBSERVACIONES REMARKS
28	90170–36279	TUERCA NUT	1					

FIG. 12 TRANSMISION TRANSMISSION

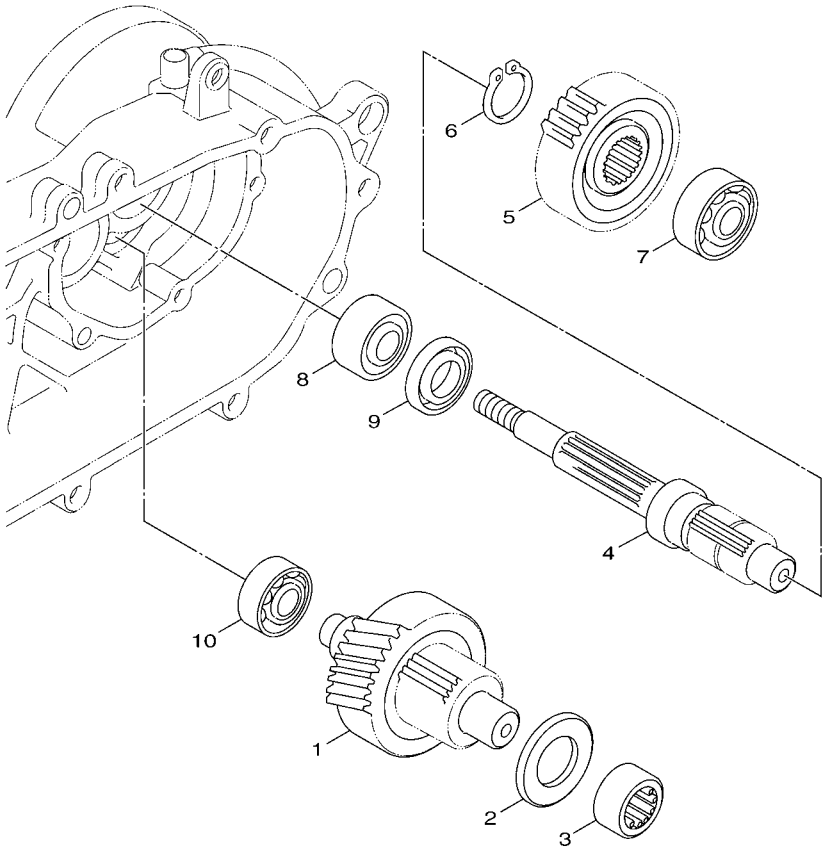

24S1210-H120

REF. Nº	CODIGO Nº PART NO.	DESCRIPCION DESCRIPTION	37D1					OBSERVACIONES REMARKS
1	5S9–E7410–00	EJE PRINCIPAL COMPLETO(11/40T) MAIN AXLE COMP. (11/40T)	1					
2	90201–15830	ARANDELA PLANA WASHER, PLATE	1					
3	93311–315Y2	COJINETE DE RODILLOS BEARING	1					
4	5S9–E7421–00	EJE SECUNDARIO AXLE, DRIVE	1					
5	5S9–E7211–00	ENGRANAJE RUEDA DE 1 RA (44T) GEAR, 1ST WHEEL (44T)	1					
6	99009–25400	PRESILLA REDONDA CIRCLIP	1					
7	93306–303Y8	COJINETE BEARING	1					
8	93306–272Y0	COJINETE BEARING	1					
9	93102–32800	SELLO ACEITE OIL SEAL	1					
10	93306–301YL	COJINETE BEARING	1					

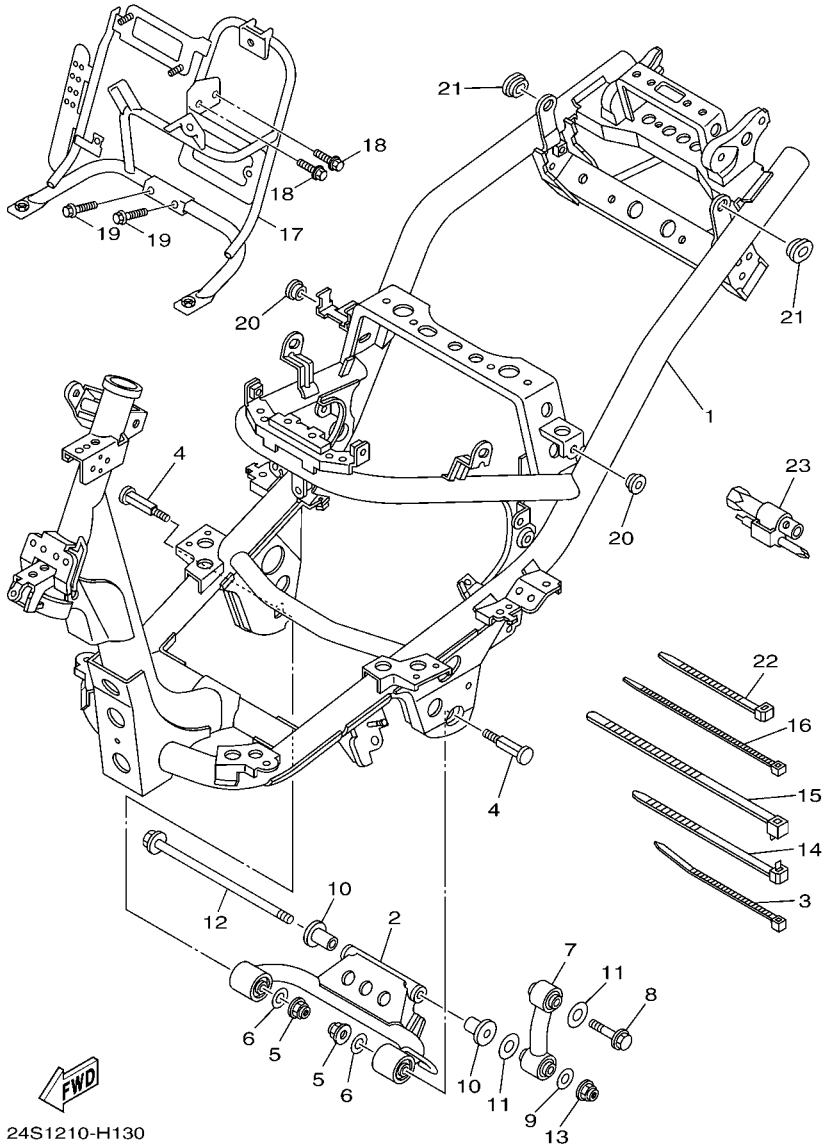

FIG. 13 CUADRO FRAME

REF. Nº	CODIGO Nº PART NO.	DESCRIPCION DESCRIPTION	37D1					OBSERVACIONES REMARKS
1	24P–F1110–00–7M	ARMAZON COMPLETO FRAME COMP.	1					MDS MDS
2	5S9–F1420–00	SOPORTE DE MOTOR COMPLETO ENGINE BRACKET COMP. 2	1					
3	90464–40801	BRIDA CLAMP	1					
4	3UH–F1481–00	PERNO DE MONTAJE DE MOTOR 1 BOLT, ENGINE MOUNTING 1	2					
5	90185–10801	TUERCA AUTOBLOCANTE NUT, SELF-LOCKING	2					
6	90201–105A2	ARANDELA PLANA WASHER, PLATE	2					
7	5ML–F1480–10	SOPORTE DE MOTOR STAY, ENGINE	1					
8	5S9–F1482–00	PERNO DE MONTAJE DE MOTOR 2 BOLT, ENGINE MOUNTING 2	1					
9	90201–105A2	ARANDELA PLANA WASHER, PLATE	1					
10	5ML–F1544–01	COLLAR 1 COLLAR 1	2					
11	90202–15803	ARANDELA DE PLANA WASHER, PLATE	2					
12	5ML–F1481–00	PERNO DE MONTAJE DE MOTOR 1 BOLT, ENGINE MOUNTING 1	1					
13	90185–10801	TUERCA AUTOBLOCANTE NUT, SELF-LOCKING	1					
14	90464–12812	BRIDA CLAMP	2					
15	90464–20809	BRIDA CLAMP	1					
16	90464–60800	BRIDA CLAMP	1					
17	5S9–F128A–00	MENSULA DE REGULADOR BRACKET, REGULATOR	1					
18	95807–06010	TORNILLO BOLT, FLANGE	2					
19	95817–08030	TORNILLO BOLT, FLANGE	2					
20	90480–13814	TAPON GROMMET	2					
21	90480–01558	TAPON GROMMET	4					
22	90464–15840	BRIDA CLAMP	1					
23	4CW–F8100–00	JUEGO DE HERRAMIENTAS TOOL KIT	1					

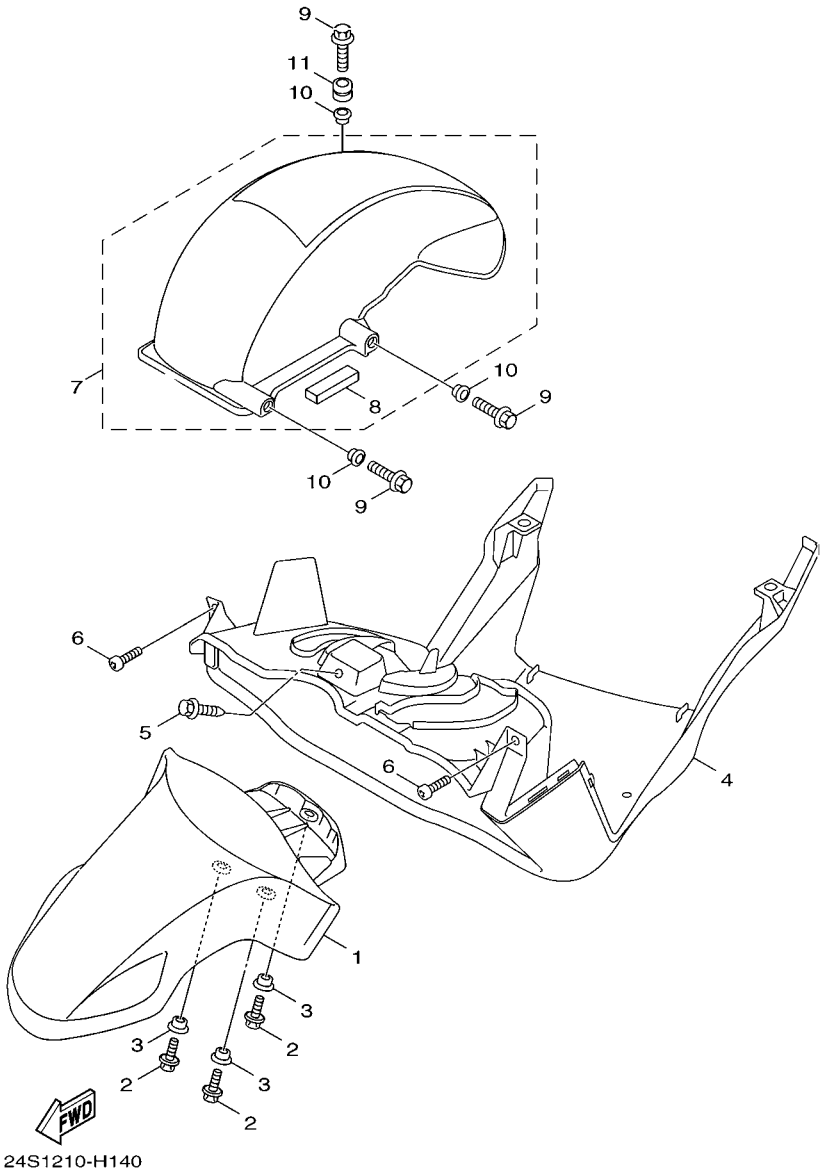

FIG. 14 GUARDABARRO DELANTERO FRONT FENDER

REF. Nº	CODIGO Nº PART NO.	DESCRIPCION DESCRIPTION	37D1					OBSERVACIONES REMARKS
1	5S9–F1511–00	GUARDABARRO DELANTERO FENDER, FRONT	1					
2	90119–06821	TORNILLO CON ARANDELA BOLT, WITH WASHER	3					
3	90387–068F8	ESPACIADOR COLLAR	3					
4	5S9–F1552–00	GUARDABARRO FENDER, INNER	1					
5	90119–06821	TORNILLO CON ARANDELA BOLT, WITH WASHER	1					
6	97707–50016	TORNILLO SCREW, TRUSS HEAD TAPPING	2					
7	5S9–XF161–00	GUARDABARRO TRASERO FENDER, REAR	1					
8	5CA–F1639–00	.AMORTIGUADOR 2 .DAMPER 2	1					
9	95807–06016	TORNILLO BOLT, FLANGE	3					
10	90387–06868	ESPACIADOR COLLAR	3					
11	90480–12813	TAPON GROMMET	1					

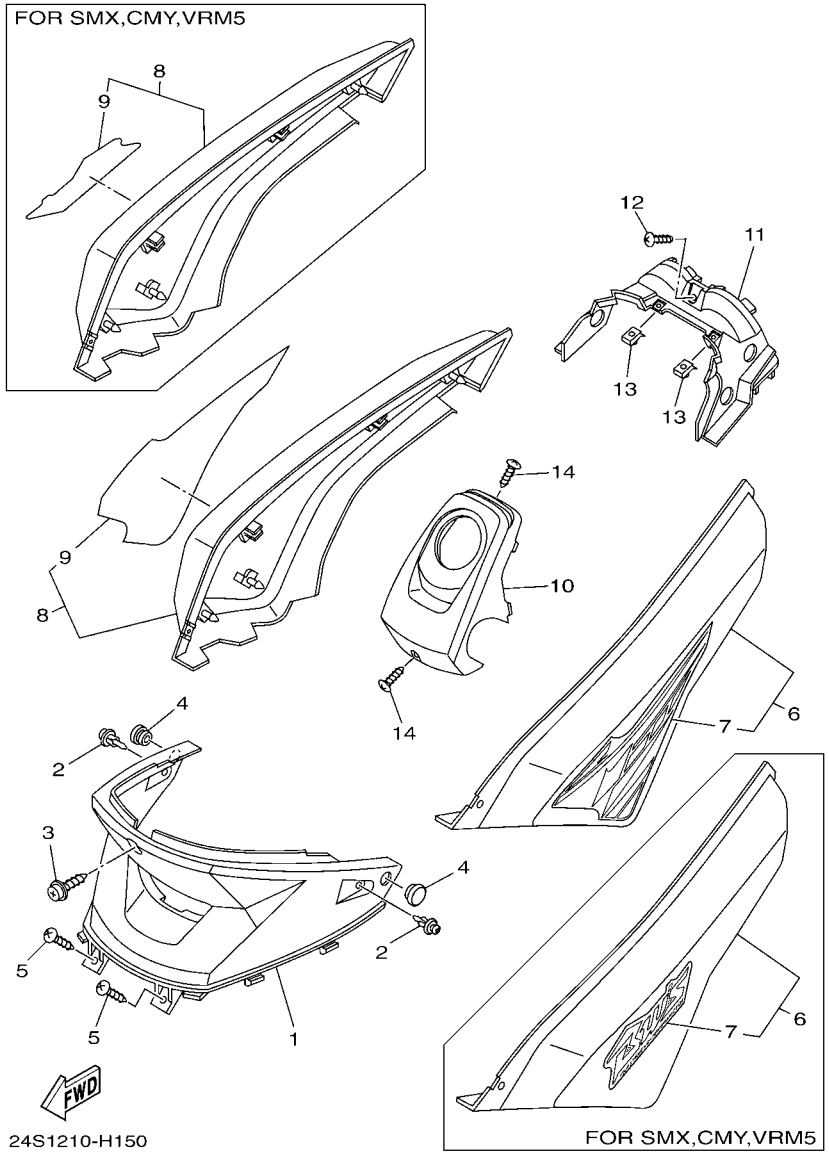

24S1210-H150

FIG. 15 CUBIERTA LATERAL SIDE COVER

REF. Nº	CODIGO Nº PART NO.	DESCRIPCION DESCRIPTION	37D1					OBSERVACIONES REMARKS
1	5S9–F1711–00	CUBIERTA LATERAL 1 COVER, SIDE 1	1					
2	90269–06806	REMACHE RIVET	2					
3	90159–06812	TORNILLO CON VALONA SCREW, WITH WASHER	1					
4	4DH–F6199–01	TAPON PLUG, BLIND	2					
5	97707–50012	TORNILLO SCREW, TRUSS HEAD TAPPING	2					
6	5S9–XF172–00–P4	TAPA LTERAL 2 COVER, SIDE 2	1					UR PARA DPBMC UR FOR DPBMC
	5S9–XF172–10–P0	TAPA LTERAL 2 COVER, SIDE 2	1					UR PARA SMX UR FOR SMX
	5S9–XF172–10–AL	TAPA LTERAL 2 COVER, SIDE 2	1					UR PARA CMY UR FOR CMY
	5S9–XF172–00–P5	TAPA LTERAL 2 COVER, SIDE 2	1					UR PARA VRM5 UR FOR VRM5
7	24P–F1782–00	.EMBLEMA 2 .EMBLEM 2	1					UR PARA DPBMC UR FOR DPBMC
	24S–F1781–00	.EMBLEMA 1 .EMBLEM 1	1					UR PARA SMX UR FOR SMX
	24S–F1781–10	.EMBLEMA 1 .EMBLEM 1	1					UR PARA CMY UR FOR CMY
	24S–F1781–20	.EMBLEMA 1 .EMBLEM 1	1					UR PARA VRM5 UR FOR VRM5
8	5S9–XF173–00–P4	TAPA LATERAL 3 COVER, SIDE 3	1					UR PARA DPBMC UR FOR DPBMC
	5S9–XF173–10–P0	TAPA LATERAL 3 COVER, SIDE 3	1					UR PARA SMX UR FOR SMX
	5S9–XF173–10–AL	TAPA LATERAL 3 COVER, SIDE 3	1					UR PARA CMY UR FOR CMY
	5S9–XF173–00–P5	TAPA LATERAL 3 COVER, SIDE 3	1					UR PARA VRM5 UR FOR VRM5
9	24P–F1783–00	.EMBLEMA 3 .EMBLEM 3	1					UR PARA DPBMC UR FOR DPBMC
	24S–F1781–00	.EMBLEMA 1 .EMBLEM 1	1					UR PARA SMX UR FOR SMX
	24S–F1781–10	.EMBLEMA 1 .EMBLEM 1	1					UR PARA CMY UR FOR CMY
	24S–F1781–20	.EMBLEMA 1 .EMBLEM 1	1					UR PARA VRM5 UR FOR VRM5
10	5S9–F1741–00	CUBIERTA LATERAL 4 COVER, SIDE 4	1					
11	5S9–F171E–00	CUBIERTA LATERAL 5 COVER, SIDE 5	1					
12	97707–50012	TORNILLO SCREW, TRUSS HEAD TAPPING	1					
13	90183–05807	TUERCA DE RESORTE NUT, SPRING	2					
14	97707–50012	TORNILLO SCREW, TRUSS HEAD TAPPING	2					

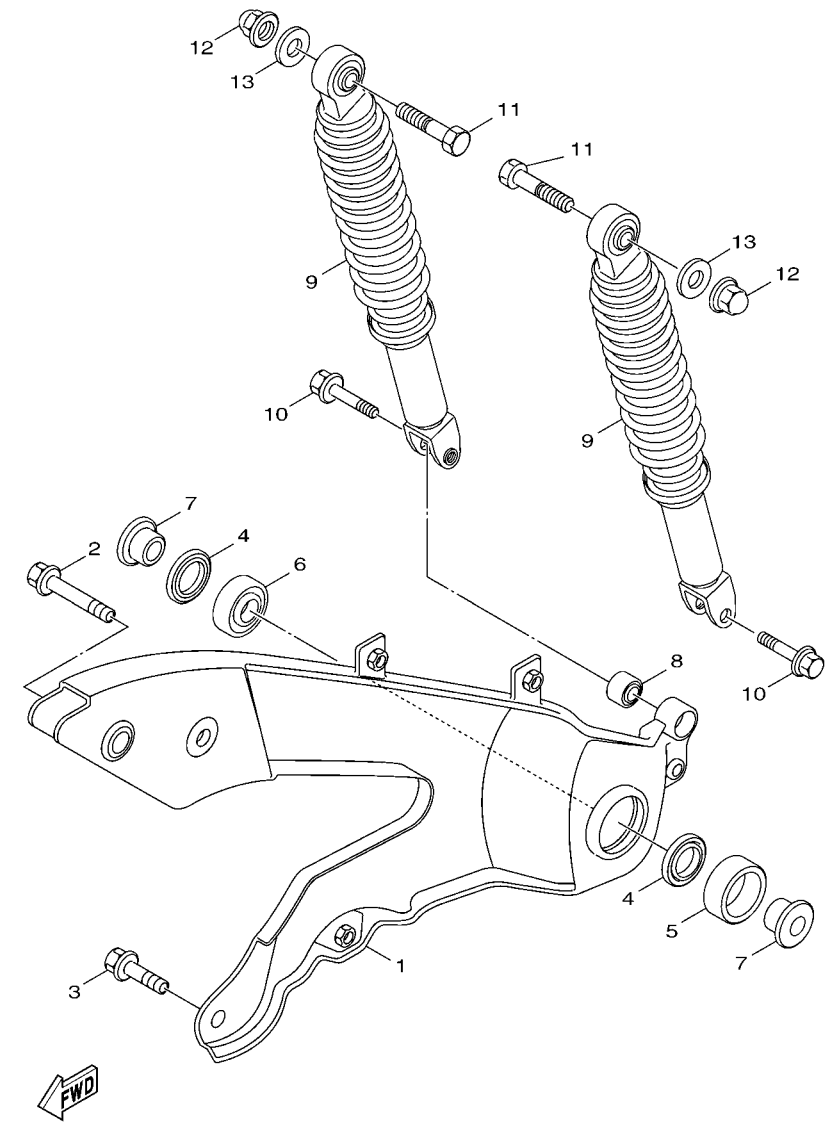

24S1210-H160

FIG. 16 BRAZO TRASERO & SUSPENSION REAR ARM & SUSPENSION

REF. Nº	CODIGO Nº PART NO.	DESCRIPCION DESCRIPTION	37D1					OBSERVACIONES REMARKS
1	5S9–F2110–01	BRAZO TRASERO COMPLETO REAR ARM COMP.	1					
2	95827–08045	TORNILLO BOLT, FLANGE	1					
3	95827–08025	TORNILLO BOLT, FLANGE	1					
4	93106–20813	SELLO ACEITE OIL SEAL	2					
5	3UH–F2184–00	BUJE BUSH	1					
6	93306–202X1	COJINETE BEARING	1					
7	5S9–F5315–00	SEPARADOR FLANGE, SPACER	2					
8	4X6–F2216–00	BUJE DEL AMORTIGUADOR TRASERO BUSH, REAR SHOCK ABSORBER	1					
9	24P–F2210–00	AMORTIGUADOR TRASERO COMPLETO SHOCK ABSORBER ASSY, REAR	2					
10	90105–08121	TORNILLO BOLT, FLANGE	2					
11	90101–10875	TORNILLO BOLT	2					
12	95307–10800	TUERCA NUT	2					
13	90201–101J1	ARANDELA PLANA WASHER, PLATE	2					

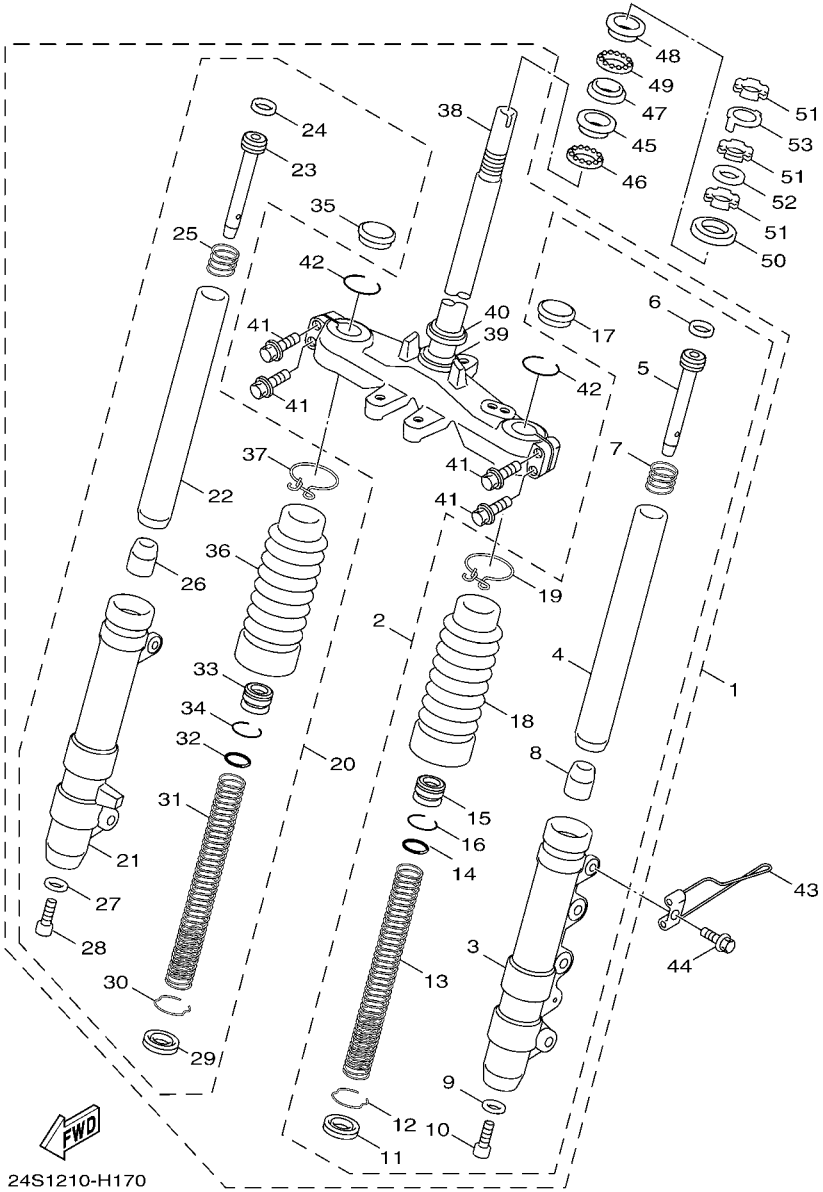

FIG. 17 HORQUILLA DELANTERA FRONT FORK

REF. Nº	CODIGO Nº PART NO.	DESCRIPCION DESCRIPTION	37D1					OBSERVACIONES REMARKS
1	5S9–F3100–00	HORQUILLA DELANTERA COMPLETA FRONT FORK ASSY	1					
2	5S9–F3102–00	.HORQUILLA DELANTERA COMPL.(MI) .FRONT FORK ASSY (L.H)	1					
3	5S9–F3126–00	..TUBO EXTERIOR (IZQUIERDO) ..TUBE, OUTER (LEFT)	1					
4	5S9–F3110–00	..TUBO INTERIOR COMPLETO 1 ..INNER TUBE COMP.1	1					
5	5S9–F3142–00	..ASIENTO DEL MUELLE SUPERIOR ..SEAT, SPRING UPPER	1					
6	4C6–F318X–00	..ANILLO DE PISTON ..PISTON RING	1					
7	4C6–F3151–00	..RESORTE DE REBOTE ..SPRING, REBOUND	1					
8	4C6–F3171–00	..PISTON HORQUILLA DELANT. ..PISTON, FRONT FORK	1					
9	4C6–F3158–00	..EMPAQUE ..GASKET	1					
10	4C6–F3181–00	..TORNILLO CABEZAHEXAGONAL ..BOLT, HEXAGON SOCKET HEAD	1					
11	4C6–F3145–00	..RETEN DE ACEITE ..OIL SEAL	1					
12	4C6–F3157–00	..ANILLO DEL PISTON ..RING, PISTON	1					
13	5S9–F3141–00	..RESORTE HORQUILLA DELANT. ..SPRING, FRONT FORK	1					
14	4C6–F3147–00	..ARO ..O-RING	1					
15	4C6–F3113–00	..COLLAR ..COLLAR	1					
16	4C6–F3155–00	..ANILLO DE FIELTRO ..RING, FELT	1					
17	4C6–F3154–00	..TAPON TUBO INTERIOR ..CAP	1					
18	4C6–F3191–00	..FUNDA ..BOOT	1					
19	4C6–F3192–00	..BANDA ..BAND	1					
20	5S9–F3103–00	.HORQUILLA DELANTERA COMPL.(MD) .FRONT FORK ASSY (R.H)	1					
21	5S9–F3136–00	..TUBO EXTERIOR ..TUBE, OUTER (RIGHT)	1					
22	5S9–F3110–00	..TUBO INTERIOR COMPLETO 1 ..INNER TUBE COMP.1	1					
23	5S9–F3142–00	..ASIENTO DEL MUELLE SUPERIOR ..SEAT, SPRING UPPER	1					
24	4C6–F318X–00	..ANILLO DE PISTON ..PISTON RING	1					
25	4C6–F3151–00	..RESORTE DE REBOTE ..SPRING, REBOUND	1					
26	4C6–F3171–00	..PISTON HORQUILLA DELANT. ..PISTON, FRONT FORK	1					
27	4C6–F3158–00	..EMPAQUE ..GASKET	1					

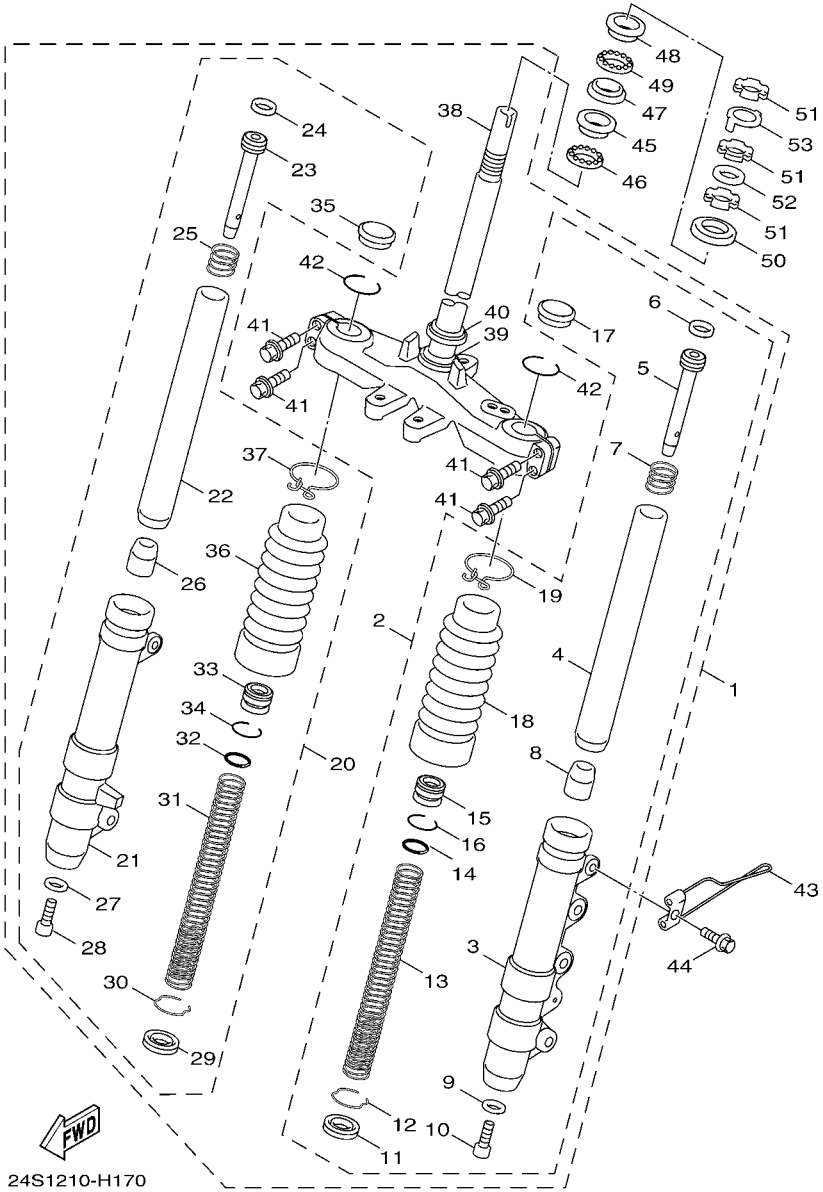

FIG. 17 HORQUILLA DELANTERA FRONT FORK

REF. Nº	CODIGO Nº PART NO.	DESCRIPCION DESCRIPTION	37D1					OBSERVACIONES REMARKS
28	4C6–F3181–00	..TORNILLO CABEZAHEXAGONAL ..BOLT, HEXAGON SOCKET HEAD	1					
29	4C6–F3145–00	..RETEN DE ACEITE ..OIL SEAL	1					
30	4C6–F3157–00	..ANILLO DEL PISTON ..RING, PISTON	1					
31	5S9–F3141–00	..RESORTE HORQUILLA DELANT. ..SPRING, FRONT FORK	1					
32	4C6–F3147–00	..ARO ..O-RING	1					
33	4C6–F3113–00	..COLLAR ..COLLAR	1					
34	4C6–F3155–00	..ANILLO DE FIELTRO ..RING, FELT	1					
35	4C6–F3154–00	..TAPON TUBO INTERIOR ..CAP	1					
36	4C6–F3191–00	..FUNDA ..BOOT	1					
37	4C6–F3192–00	..BANDA ..BAND	1					
38	5S9–F3340–00	.PLATINA INFERIOR COMPLETA .UNDER BRACKET COMP.	1					
39	3KW–F3462–00	.SELLO PARA POLVO .SEAL, DUST	1					
40	4C6–F3411–10	.PISTA DE BOLAS 1 .RACE, BALL 1	1					
41	4C6–F3346–00	.PERNO 1 .BOLT 1	4					
42	4C6–F3153–00	.ANILLO DE ENGANCHE .RING, SNAP	2					
43	5S9–F3317–00	SOSTEN DE CABLE HOLDER, CABLE	1					
44	9580L–06010	TORNILLO BOLT, FLANGE	1					
45	4C6–F3412–00	PISTA DE BOLAS 2 RACE, BALL 2	1					
46	4C6–F341E–00	RETEN DE COJINETE RETAINER, BALL BEARING	1					
47	4C6–F3414–00	BASE DE BOLA 4 RACE, BALL 4	1					
48	4C6–F3413–00	BASE DE BOLA 3 RACE, BALL 3	1					
49	4C6–F341D–00	RETEN DE COJINETE 2 RETAINER, BALL BEARING 2	1					
50	4C6–F3416–00	CUBIERTA DE BASE DE BOLA 2 COVER, BALL RACE 2	1					
51	90179–25615	TUERCA NUT	3					
52	90202–26142	ARANDELA DE PLANA WASHER, PLATE	1					
53	4VP–F3418–00	ARANDELA ESPECIAL WASHER, SPECIAL	1					

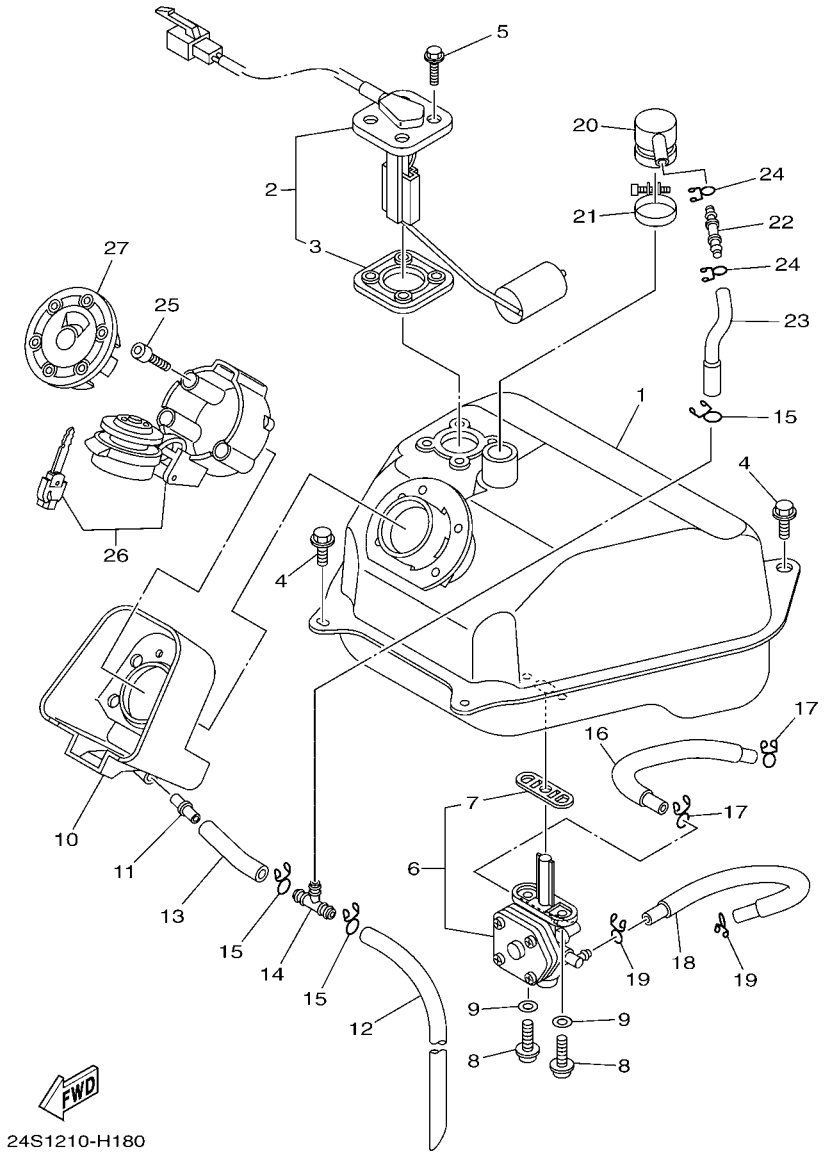

FIG. 18 DEPOSITO DE COMBUSTIBLE FUEL TANK

REF. Nº	CODIGO Nº PART NO.	DESCRIPCION DESCRIPTION	37D1					OBSERVACIONES REMARKS
1	24P–F4110–00–33	DEPOSITO DE COMBUSTIBLE COMP. FUEL TANK COMP.	1					YB YB
2	24P–XH575–00	MEDIDOR DE COMBUSTIBLE COMPL. SENDER UNIT ASSY	1					
3	53X–H5753–00	.EMPAQUE DE UNIDAD TRANSMISORA .GASKET, SENDER UNIT	1					
4	95827–06012	TORNILLO BOLT, FLANGE	4					
5	90119–05071	TORNILLO CON ARANDELA BOLT, WITH WASHER	4					
6	4TE–F4500–00	GRIFO DE COMBUSTIBLE 1 FUEL COCK ASSY 1	1					
7	4CW–F452K–00	.ANILLO O .O-RING	1					
8	90149–06011	TORNILLO DE REGLAJE SCREW	2					
9	90202–05193	ARANDELA DE PLANA WASHER, PLATE	2					
10	5S9–F414A–00	CUBIERTA DE LLENADOR COVER, FILLER	1					
11	4TE–F1753–00	COPA DE CONECTOR BOSS, CONNECTOR	1					
12	91A11–07042	TUBO RESEIRADERO TUBE,FLEXUBLE	1					
13	91A10–07005	TUBO TUBE, FLEXIBLE	1					
14	3UH–F4376–00	TUBO DE UNION 1 PIPE, JOINT 1	1					
15	90467–10041	PRESILLA CLIP	3					
16	24P–F4311–00	TUBO DE COMBUSTIBLE 1 PIPE, FUEL 1	1					
17	90467–09006	PRESILLA CLIP	2					
18	24P–F4316–00	TUBO 6 PIPE 6	1					
19	90467–08003	PRESILLA CLIP	2					
20	3UH–F4112–00	TUBO JUNTA PIPE	1					
21	90450–28802	BRIDA, MANGUERA HOSE CLAMP ASSY	1					
22	3UH–F1753–00	COPA DE CONECTOR BOSS, CONNECTOR	1					
23	24P–F4313–00	TUBO 3 PIPE 3	1					
24	90467–09006	PRESILLA CLIP	2					
25	91317–05014	PERNO BOLT	3					
26	5S9–F4602–00	TAPON COMPLETO CAP ASSY	1					
27	5S9–F467E–00	TAPA CAP	1					

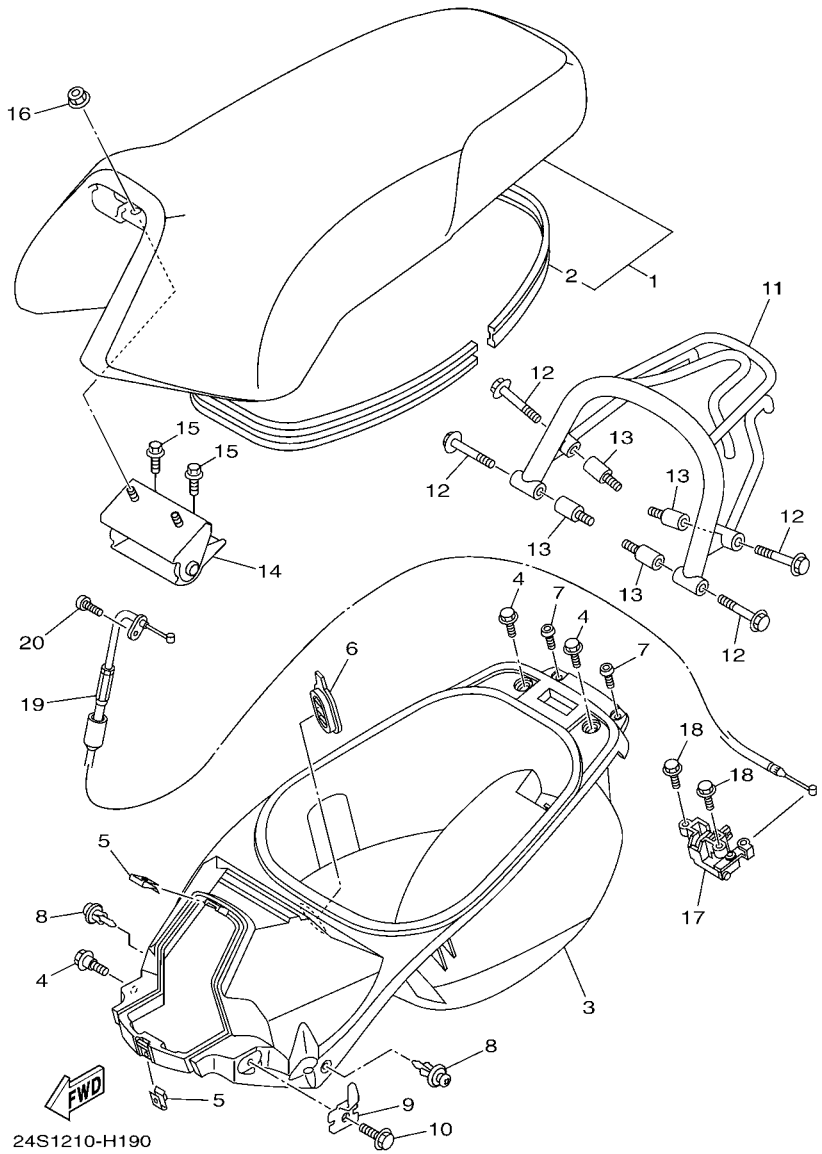

FIG. 19 ASIENTO SEAT

REF. Nº	CODIGO Nº PART NO.	DESCRIPCION DESCRIPTION	37D1					OBSERVACIONES REMARKS
1	5S9–F4730–00	SILLIN DOBLE COMPLETO DOUBLE SEAT ASSY	1					
2	5S9–F475M–00	.SELLO .SEAL	1					
3	24P–F473R–00	CAJA 1 BOX 1	1					
4	90109–063F1	PERNO BOLT	3					
5	90183–05807	TUERCA DE RESORTE NUT, SPRING	2					
6	1B6–F4742–00	ANILLO PROTECTOR GROMMET	1					
7	90169–05800	TORNILLO TAPPING SCREW	2					
8	90269–06806	REMACHE RIVET	2					
9	5S9–F1398–00	COLGADOR DE CASCO HANGER, HELMET	1					
10	95807–06016	TORNILLO BOLT, FLANGE	1					
11	5S9–F4842–00–7M	PARRILLA CARRIER, REAR	1					MDS MDS
12	90119–08848	TORNILLO CON ARANDELA BOLT, WITH WASHER	4					
13	5S9–F4735–00	TUERCA FIXADORA SPEED NUT	4					
14	5S9–F4772–00	RESORTE HINGE ASSY	1					
15	95807–06012	TORNILLO BOLT, FLANGE	2					
16	95707–06500	TUERCA DE BRIDA NUT, FLANGE	2					
17	4UE–F4780–02	CERRADURA SILLIN COMPLETO SEAT LOCK ASSY	1					
18	95807–06016	TORNILLO BOLT, FLANGE	2					
19	5S9–F478E–00	CABLE CABLE, SEAT LOCK	1					
20	98507–05010	TORNILLO DE CABEZA CON PLANA SCREW, PAN HEAD	1					

FIG. 20 RUEDA DELANTERA FRONT WHEEL

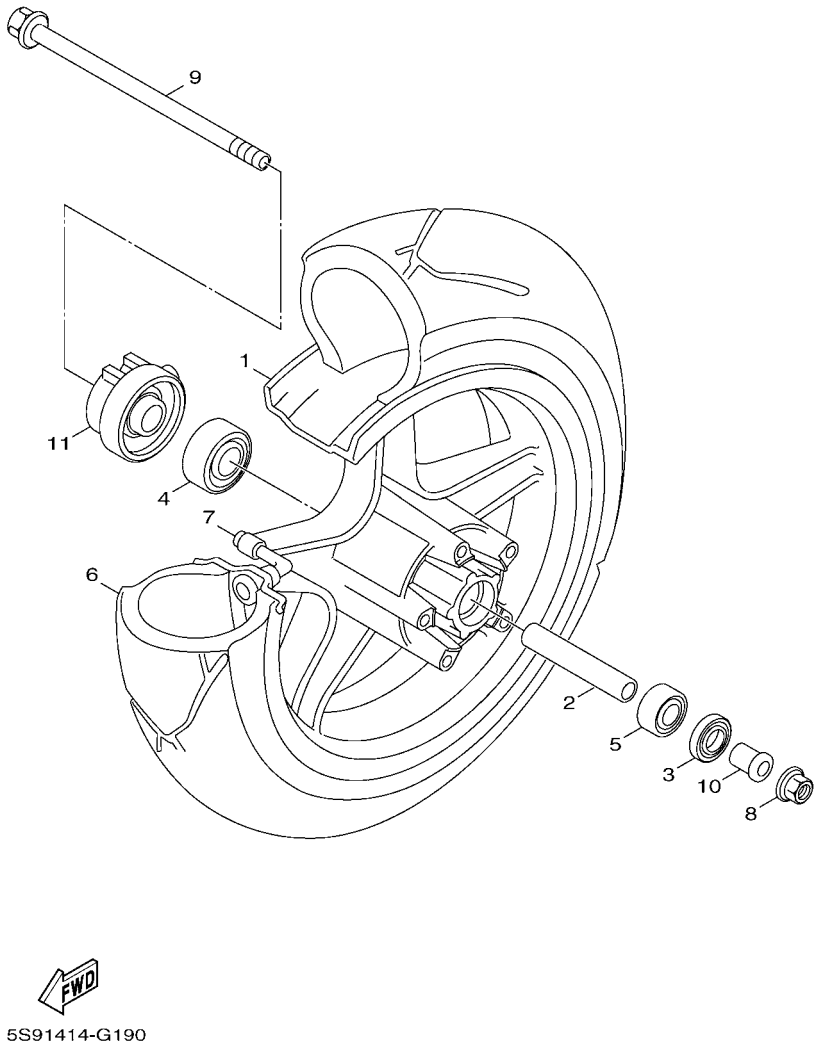

REF. Nº	CODIGO Nº PART NO.	DESCRIPCION DESCRIPTION	37D1					OBSERVACIONES REMARKS
1	5ML–F5168–20–33	RUEDA FUNDIDA DELANTERA CAST WHEEL, FRONT	1					YB YB
2	5ML–F5183–00	COLLAR DE RUEDA COLLAR, WHEEL	1					
3	93102–17853	SELLO ACEITE OIL SEAL	1					
4	93306–201Y7	COJINETE BEARING	1					
5	93306–301YA	COJINETE BEARING	1					
6	94112–12805	NEUMATICO (120/70-12 51L) TIRE (120/70-12 51L)	1					KENDA KENDA
7	93900–00814	VALVULA DE ARO (PVR70) VALVE, RIM (PVR70)	1					
8	95607–12200	TUERCA DE AUTO-CIERRE NUT, SELF-LOCKING	1					
9	5S9–F5181–00	EJE DE LA RUEDA AXLE, WHEEL	1					
10	90387–125J1	ESPACIADOR COLLAR	1					
11	5S9–F5190–00	UNIDAD DE ENGRANAJE COMPLETA GEAR UNIT ASSY	1					

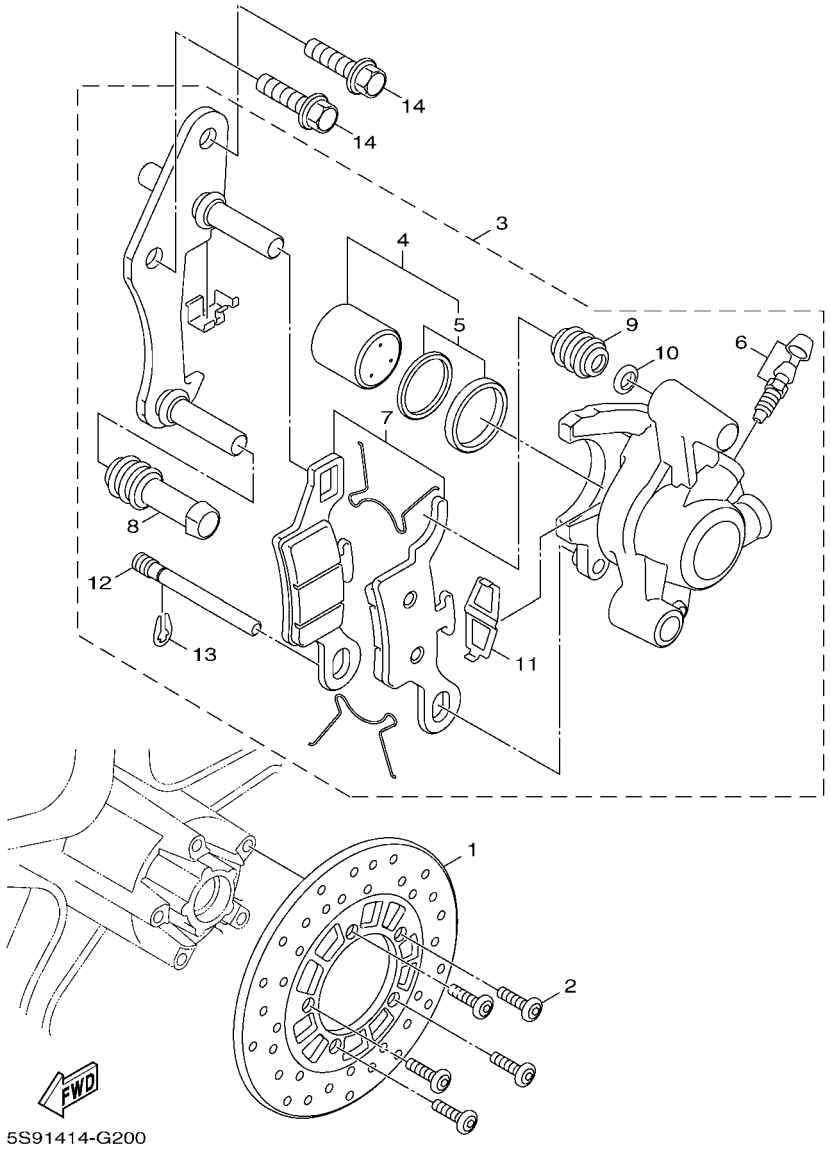

FIG. 21 CALIBRE FRENO DELANTERA FRONT BRAKE CALIPER

REF. Nº	CODIGO Nº PART NO.	DESCRIPCION DESCRIPTION	37D1					OBSERVACIONES REMARKS
1	5S9–F582U–00	DISCO DE FRENO (DERECHO) DISK, BRAKE (RIGHT)	1					
2	90149–08814	TORNILLO DE REGLAJE SCREW	5					
3	5S9–F580T–00	CALIBRE COMPLETO (IZQUIERDO) CALIPER ASSY (LEFT)	1					
4	5S9–W0057–00	.PISTON COMPLETO PINZA .PISTON ASSY, CALIPER	1					
5	5S9–W0047–00	..JUEGO DE RETENES DE PINZA ..CALIPER SEAL KIT	1					
6	5S9–W0048–00	.CJTO TORNILLO DE PURGA .BLEED SCREW KIT	1					
7	5S9–W0045–00	.JUEGO DE COJIN DE FRENO .BRAKE PAD KIT	1					
8	5S9–F5917–00	.FUNDA DE CALIBRE .BOOT, CALIPER	1					
9	5S9–F5937–00	.FUNDA .BOOT 2	1					
10	5S9–F5913–00	.RETEN .RETAINER	1					
11	5S9–F5919–00	.SOPORTE DE PASTILLAS .SUPPORT, PAD	1					
12	5S9–F5924–00	.PASADOR .PIN, PAD	1					
13	5S9–F5925–00	.PRESILLA .CLIP	1					
14	90105–10638	TORNILLO BOLT, FLANGE	2					

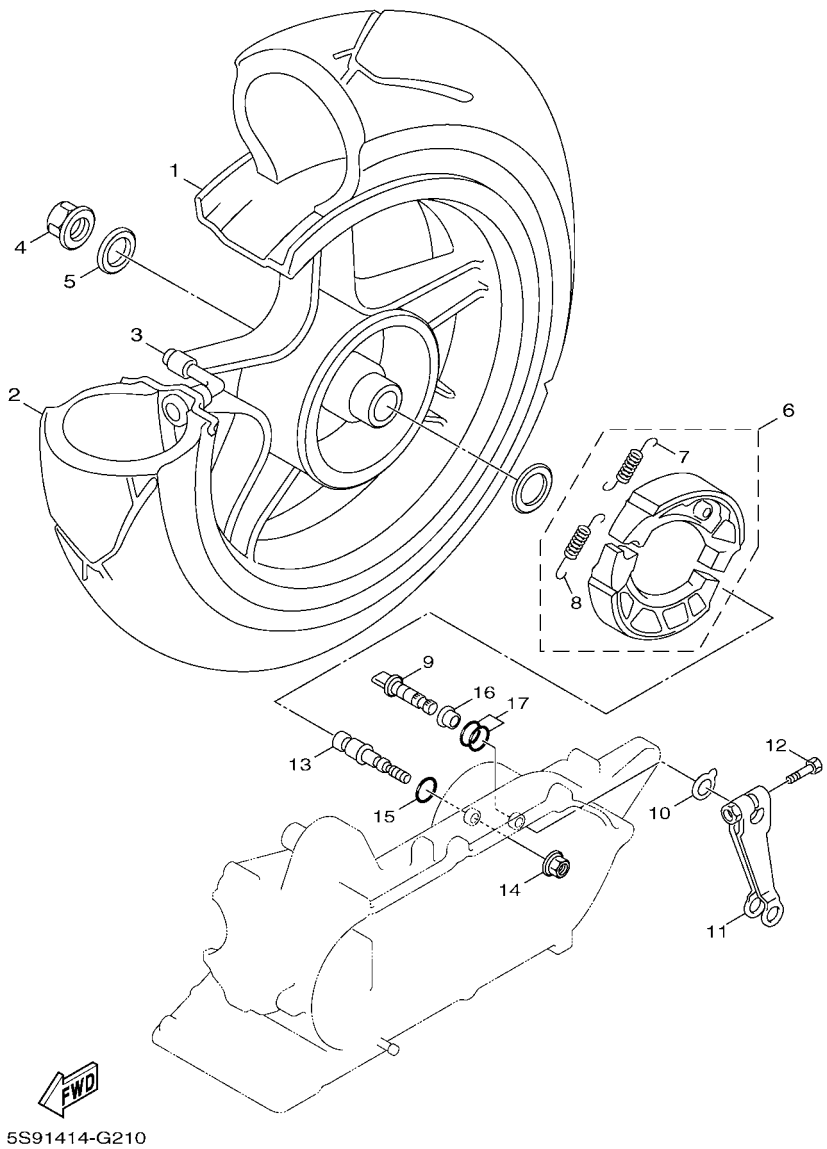

FIG. 22 RUEDA TRASERA REAR WHEEL

REF. Nº	CODIGO Nº PART NO.	DESCRIPCION DESCRIPTION	37D1					OBSERVACIONES REMARKS
1	5ML–F5338–20–33	RUEDA FUNDIDA TRASERA CAST WHEEL, REAR	1					YB YB
2	94113–12802	NEUMATICO (130/70-12 56L) TIRE (130/70-12 56L)	1					KENDA KENDA
3	93900–00814	VALVULA DE ARO (PVR70) VALVE, RIM (PVR70)	1					
4	90185–14124	TUERCA AUTOBLOCANTE NUT, SELF-LOCKING	1					
5	90201–220J8	ARANDELA PLANA WASHER, PLATE	1					
6	5ML–XF533–00	JUEGO DE ZAPATA DE FRENO BRAKE SHOE SET	1					
7	90506–13800	.RESORTE DE TENSION .SPRING, TENSION	1					
8	90506–16802	.RESORTE DE TENSION .SPRING, TENSION	1					
9	5S9–F5351–00	ARBOL DE LEVAS CAMSHAFT	1					
10	4VP–F533A–00	PLACA INDICADOR PLATE, INDICATOR	1					
11	5S9–F5355–00	PALANCA DE ARBOL DE LEVAS LEVER, CAMSHAFT	1					
12	90101–06278	TORNILLO BOLT	1					
13	5ML–F5326–00	PASADOR PIVOTE PIN, PIVOT	1					
14	95707–10500	TUERCA DE BRIDA NUT, FLANGE	1					
15	93210–09859	ANILLO O O-RING	1					
16	5ML–F5377–00	COLLAR DE RUEDA COLLAR, WHEEL	1					
17	93210–14802	ANILLO O O-RING	2					

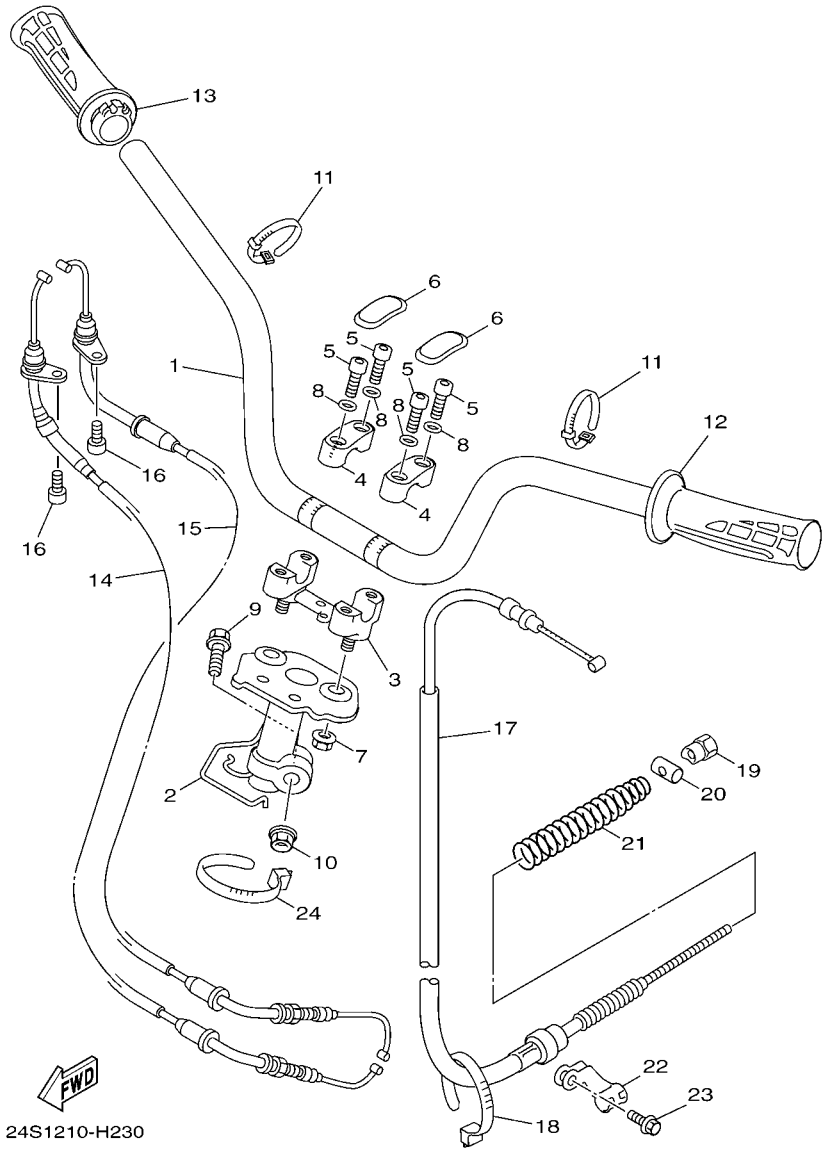

FIG. 23 MANILLAR & CABLE — STEERING HANDLE & CABLE

REF. Nº	CODIGO Nº PART NO.	DESCRIPCION DESCRIPTION	37D1					OBSERVACIONES REMARKS
1	5S9–F6111–00	MANUBRIO HANDLEBAR	1					
2	5S9–F3461–00	SOPORTE DE MANUBRIO BRACKET, HANDLE	1					
3	5FH–F3442–00	SOPORTE DE MANUBRIO INFERIOR HOLDER, HANDLE LOWER	1					
4	1MH–F3441–01–35	SOPORTE DE MANUBRIO HOLDER, HANDLE UPPER	2					SL SL
5	91317–08025	PERNO BOLT	4					
6	1MH–F3469–00	TAPA DE PERNO CAP, BOLT	2					
7	90185–10801	TUERCA AUTOBLOCANTE NUT, SELF-LOCKING	2					
8	90201–08823	ARANDELA PLANA WASHER, PLATE	4					
9	90105–10036	TORNILLO BOLT, FLANGE	1					
10	90185–10801	TUERCA AUTOBLOCANTE NUT, SELF-LOCKING	1					
11	31U–H3936–00	BANDA DE CABLE DE INTERRUPTOR BAND, SWITCH CORD	2					
12	4VP–F6241–01	EMPUNADURA GRIP	1					
13	5S9–F6240–00	EMPUNADURA COMPLETA GRIP ASSY	1					
14	24P–F6311–00	CABLE DE ACELERADOR 1 CABLE, THROTTLE 1	1					
15	24P–F6312–00	CABLE DE ACELERADOR 2 CABLE, THROTTLE 2	1					
16	91317–05010	PERNO BOLT	2					
17	5S9–F6351–00	CABLE DE FRENO CABLE, BRAKE	1					
18	90464–12812	BRIDA CLAMP	1					
19	90179–06843	TUERCA NUT	1					
20	90249–12008	PASADOR PIN	1					
21	90501–16801	RESORTE DE COMPRESION SPRING, COMPRESSION	1					
22	5S9–F637H–00	SOSTEN, DE CABLE 2 HOLDER, WIRE 2	1					
23	95827–06012	TORNILLO BOLT, FLANGE	1					
24	90464–12812	BRIDA CLAMP	1					

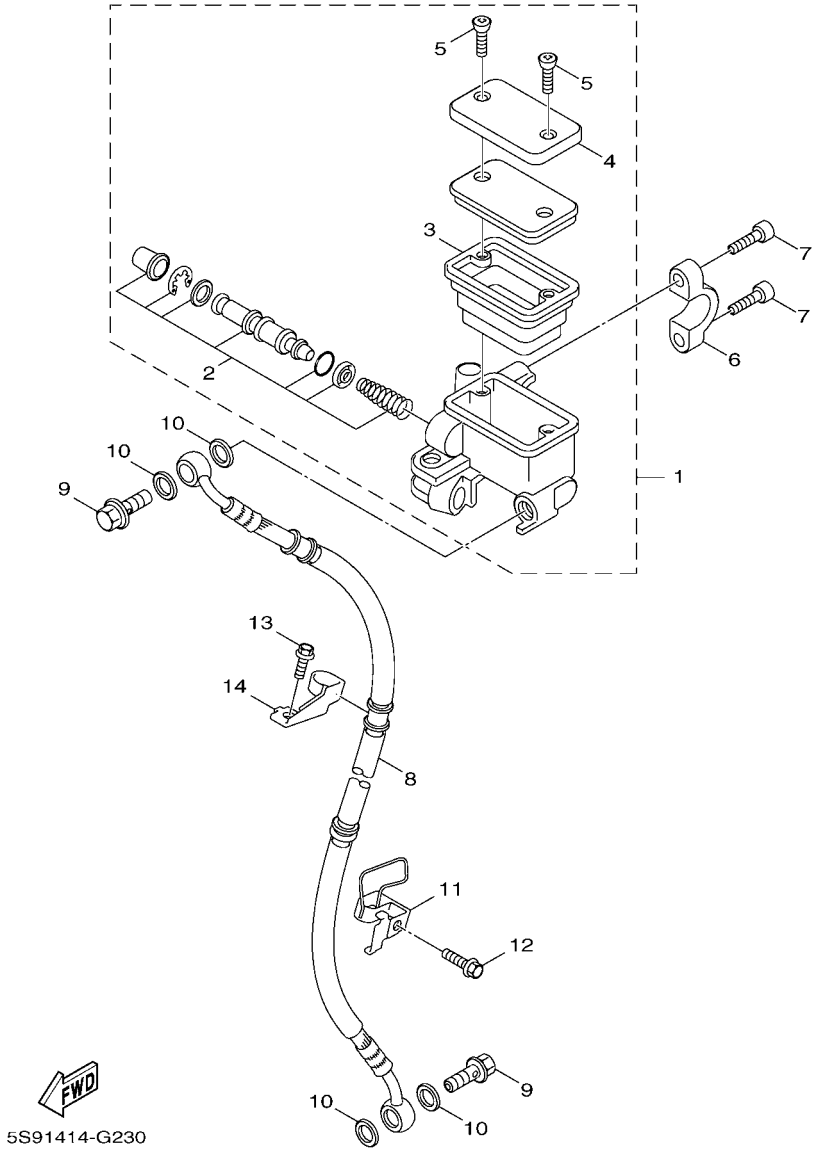

FIG. 24 CILINDRO MAESTRO DELANTERO FRONT MASTER CYLINDER

REF. Nº	CODIGO Nº PART NO.	DESCRIPCION DESCRIPTION	37D1					OBSERVACIONES REMARKS
1	5S9–F5870–00	CILINDRO MAESTRO COMPLETO MASTER CYLINDER SUB ASSY	1					
2	5S9–W0041–00	.JUEGO DE CILINDRO MAESTRO .CYLINDER KIT, MASTER	1					
3	5S9–F5854–00	.EMPAQUE,DIAFRAGMA .GASKET, DIAPHRAGM	1					
4	5S9–F5852–00	.TAPA DE TANQUE DE RESERVA .CAP, RESERVOIR	1					
5	98707–04012	.TORNILLO DE CABEZA PLANA .SCREW, FLAT HEAD	2					
6	3GF–F5867–00	SOSTEN HOLDER	1					
7	91317–06025	PERNO BOLT	2					
8	5S9–F5872–00	MANGUERA DE FRENO 1 HOSE, BRAKE 1	1					
9	90401–10805	PERNO DE UNION BOLT, UNION	2					
10	90201–10118	ARANDELA PLANA WASHER, PLATE	4					
11	5S9–F5875–00	SOPORTE DE MANGUERA FRENO 1 HOLDER, BRAKE HOSE 1	1					
12	95807–06012	TORNILLO BOLT, FLANGE	1					
13	95807–06012	TORNILLO BOLT, FLANGE	1					
14	5S9–F5876–00	SOPORTE DE MANGUERA FRENO 2 HOLDER, BRAKE HOSE 2	1					

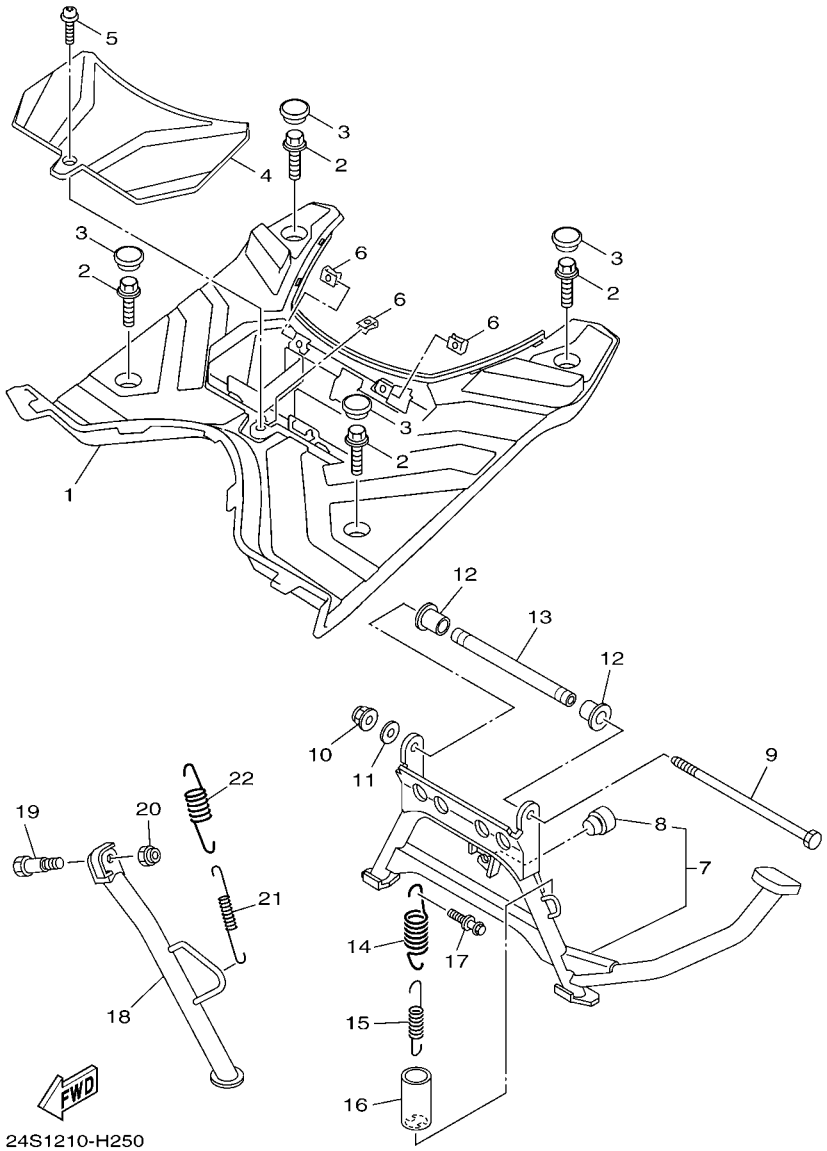

FIG. 25 SOPORTE & APOYAPIE STAND & FOOTREST

REF. Nº	CODIGO Nº PART NO.	DESCRIPCION DESCRIPTION	37D1					OBSERVACIONES REMARKS
1	5S9–F7481–00	TABLERO DE APOYAPIE BOARD, FOOTREST	1					
2	90119–06874	TORNILLO CON ARANDELA BOLT, WITH WASHER	4					
3	5HK–F7475–00	TAPA 1 CAP 1	4					
4	5S9–H2129–00	CUBIERTA DE BATERIA COVER, BATTERY	1					
5	97707–50012	TORNILLO SCREW, TRUSS HEAD TAPPING	1					
6	90183–05807	TUERCA DE RESORTE NUT, SPRING	3					
7	5S9–XF711–02	PUNTAL PRINCIPAL STAND, MAIN	1					
8	5S9–F7114–01	.TOPE DE PUNTAL PRINCIPAL .STOPPER, MAIN STAND	1					
9	5ML–F7117–00	PERNO DE PUNTAL PRINCIPAL BOLT, MAIN STAND	1					
10	95604–08200	TUERCA DE AUTO-CIERRE NUT, U FLANGE	1					
11	90201–08810	ARANDELA PLANA WASHER, PLATE	1					
12	5ML–F7121–00	BUJE BUSH	2					
13	5ML–F7113–00	COLLAR DE PUNTAL PRINCIPAL COLLAR, MAIN STAND	1					
14	90506–40800	RESORTE DE TENSION SPRING, TENSION	1					
15	90506–20803	RESORTE DE TENSION SPRING, TENSION	1					
16	5S9–F7244–00	CUBIERTA COVER	1					
17	5SU–F7254–01	GANCHO HOOK	1					
18	5S9–F7311–00	PUNTAL LATERAL STAND, SIDE	1					
19	90109–10005	PERNO BOLT	1					
20	90185–10110	TUERCA AUTOBLOCANTE NUT, SELF-LOCKING	1					
21	90506–16801	RESORTE DE TENSION SPRING, TENSION	1					
22	90506–26802	RESORTE DE TENSION SPRING, TENSION	1					

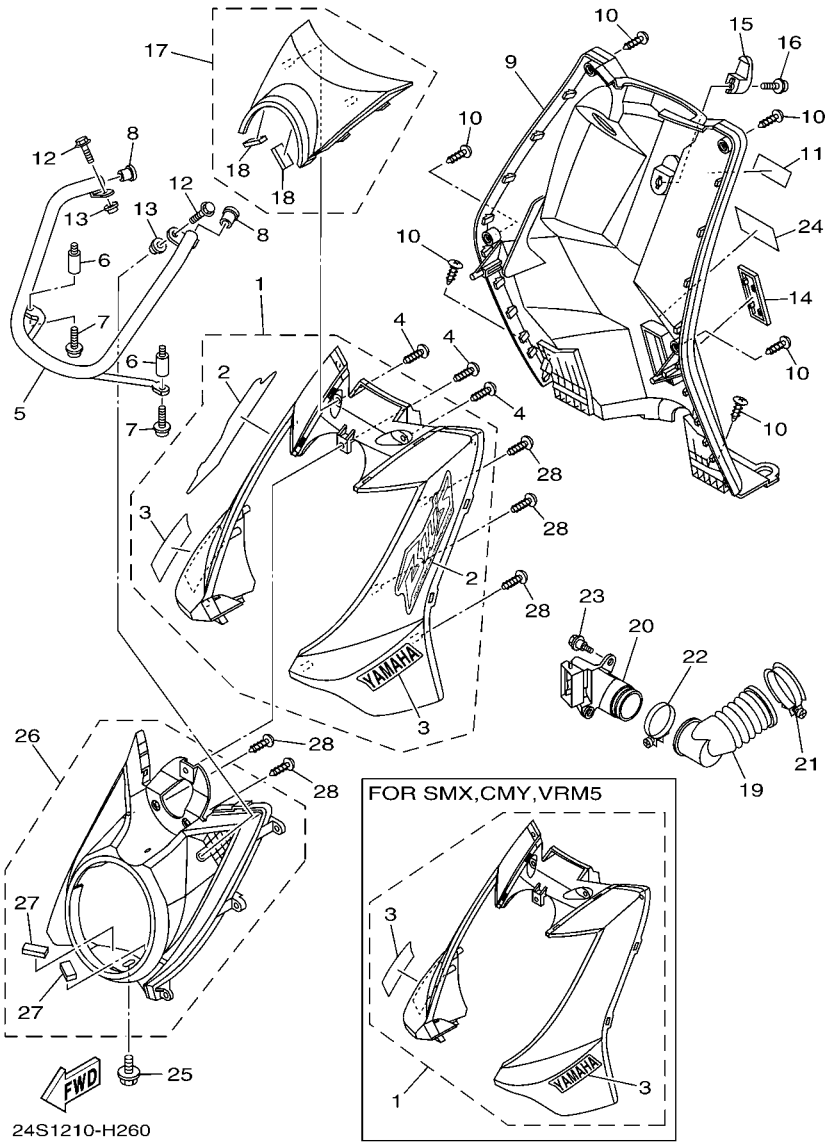

FIG. 26 PATA PROTEGIDA LEG SHIELD

REF. Nº	CODIGO Nº PART NO.	DESCRIPCION DESCRIPTION	37D1					OBSERVACIONES REMARKS
1	5S9–XF831–10–P4	PROTECCION DE PATA 1 LEG SHIELD 1	1					UR PARA DPBMC UR FOR DPBMC
	5S9–XF831–10–P0	PROTECCION DE PATA 1 LEG SHIELD 1	1					UR PARA SMX UR FOR SMX
	5S9–XF831–10–AL	PROTECCION DE PATA 1 LEG SHIELD 1	1					UR PARA CMY UR FOR CMY
	5S9–XF831–10–P5	PROTECCION DE PATA 1 LEG SHIELD 1	1					UR PARA VRM5 UR FOR VRM5
2	24P–F832D–00	.GRAFICO 17 .GRAPHIC 17	2					PARA DPBMC FOR DPBMC
3	24P–F8315–00	.EMBLEMA .EMBLEM	2					UR PARA DPBMC UR FOR DPBMC
	24P–F8315–10	.EMBLEMA .EMBLEM	2					UR PARA SMX UR FOR SMX
	24P–F8315–20	.EMBLEMA .EMBLEM	2					UR PARA CMY UR FOR CMY
	24P–F8315–30	.EMBLEMA .EMBLEM	2					UR PARA VRM5 UR FOR VRM5
4	97707–50016	TORNILLO SCREW, TRUSS HEAD TAPPING	3					
5	5S9–F840K–00–7M	ACCESORIO GUARD COMP.	1					MDS MDS
6	5S9–F1535–00	TUERCA 1 NUT 1	2					
7	90110–06851	TORNILLO ALLEN BOLT, HEXAGON SOCKET HEAD	2					
8	90338–16801	TAPON PLUG	2					
9	5S9–F8312–00	PROTECCION DE PATA 2 LEG SHIELD 2	1					
10	97707–50016	TORNILLO SCREW, TRUSS HEAD TAPPING	6					
11	4JK–F1568–00	ETIQUETA DE PRECAUCION LABEL, WARNING	1					
12	90109–06862	PERNO BOLT	2					
13	90387–068C3	ESPACIADOR COLLAR	2					
14	5FM–F8349–00	TAPA CAP	1					
15	5S9–F8257–00	GANCHO 1 HOOK 1	1					
16	90159–06822	TORNILLO CON VALONA SCREW, WITH WASHER	1					
17	5S9–XF834–00–P0	MOLDURA 1 MOLE 1	1					SMX SMX
18	5S9–F8372–00	.AMORTIGUADOR .DAMPER	2					
19	5ML–F838N–00	CONDUCTO 1 DUCT 1	1					
20	5ML–F838R–00	CONDUCTO 2 DUCT 2	1					
21	5CA–F1823–00	GRAMPA DE MANGUERA CLAMP, HOSE	1					

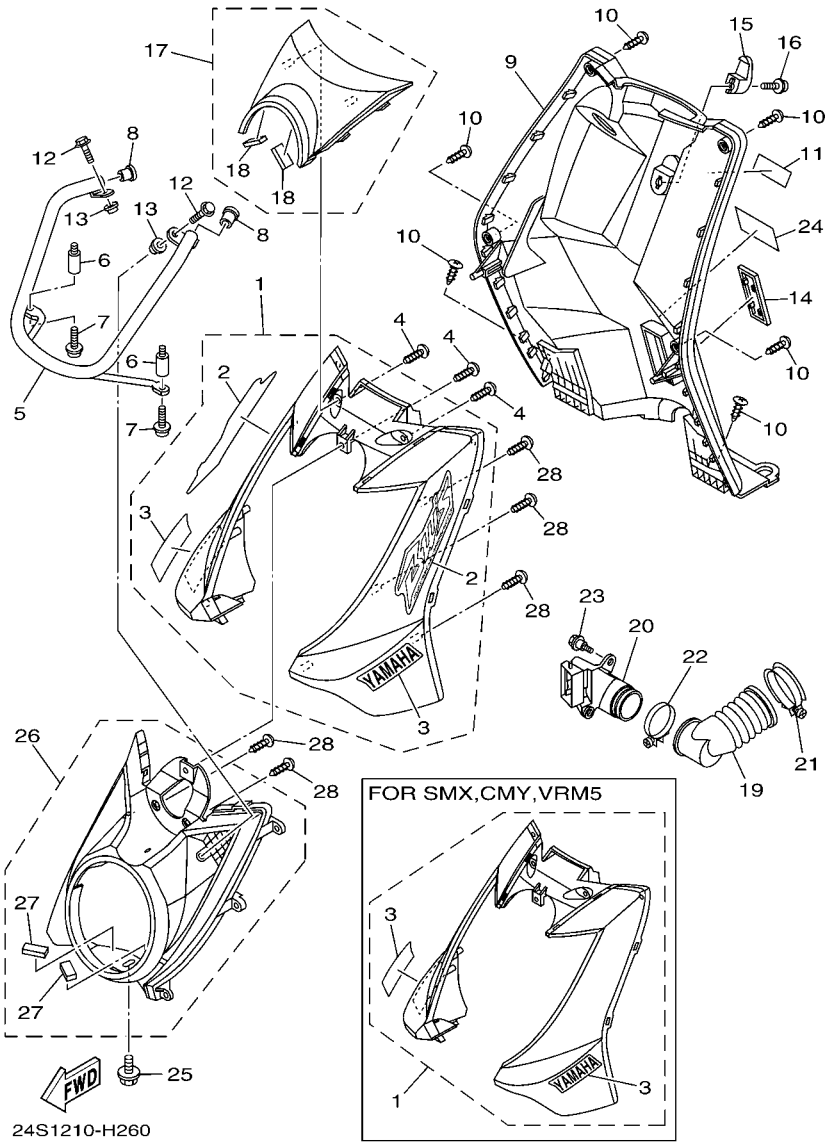

FIG. 26 PATA PROTEGIDA LEG SHIELD

REF. Nº	CODIGO Nº PART NO.	DESCRIPCION DESCRIPTION	37D1					OBSERVACIONES REMARKS
22	90450–53061	BRIDA, MANGUERA HOSE CLAMP ASSY	1					
23	90109–063F1	PERNO BOLT	2					
24	24P–F1668–00	ETIQUETA DE FRANJA LABEL, TIRE	1					
25	90119–05004	TORNILLO CON ARANDELA BOLT, WITH WASHER	1					
26	5S9–XH414–00	CUBIERTA FARO DELANTERO COVER, HEADLIGHT	1					
27	5S9–F8372–00	.AMORTIGUADOR .DAMPER	2					
28	97707–50016	TORNILLO SCREW, TRUSS HEAD TAPPING	8					

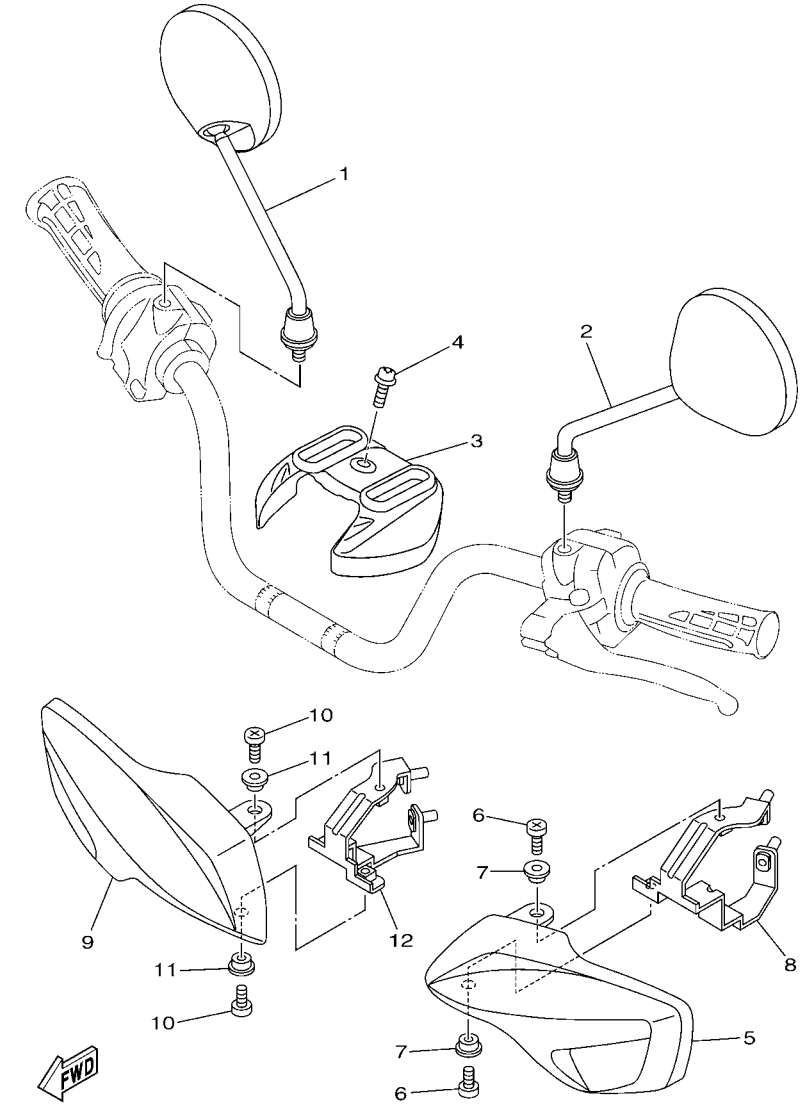

FIG. 27 BOVEDA 1 — COWLING 1

REF. Nº	CODIGO Nº PART NO.	DESCRIPCION DESCRIPTION	37D1					OBSERVACIONES REMARKS
1	4VP–F6290–00	ESPEJO COMPLETO (DERECHO) REAR VIEW MIRROR ASSY (RIGHT)	1					
2	4VP–F6280–00	ESPEJO COMPLETO (IZQUIERDO) REAR VIEW MIRROR ASSY (LEFT)	1					
3	5S9–F6143–01	CUBIERTA DE MANUBRIO SUPERIOR1 COVER, HANDLEBAR UPPER 1	1					
4	90159–05820	TORNILLO CON VALONA SCREW, WITH WASHER	1					
5	5S9–F6141–00	GUARDA ESCOBILLA 1 GUARD, BRUSH 1	1					
6	98907–05014	TORNILLO DE LIGAR SCREW, BIND	2					
7	90387–06868	ESPACIADOR COLLAR	2					
8	5S9–F612K–00	SOPORTE 2 BRKT 2	1					
9	5S9–F6142–00	GUARDA ESCOBILLA 2 GUARD, BRUSH 2	1					
10	98907–05014	TORNILLO DE LIGAR SCREW, BIND	2					
11	90387–06868	ESPACIADOR COLLAR	2					
12	5S9–F612L–00	SOPORTE 3 BRACKET 3	1					

FIG. 28 GENERADOR GENERATOR

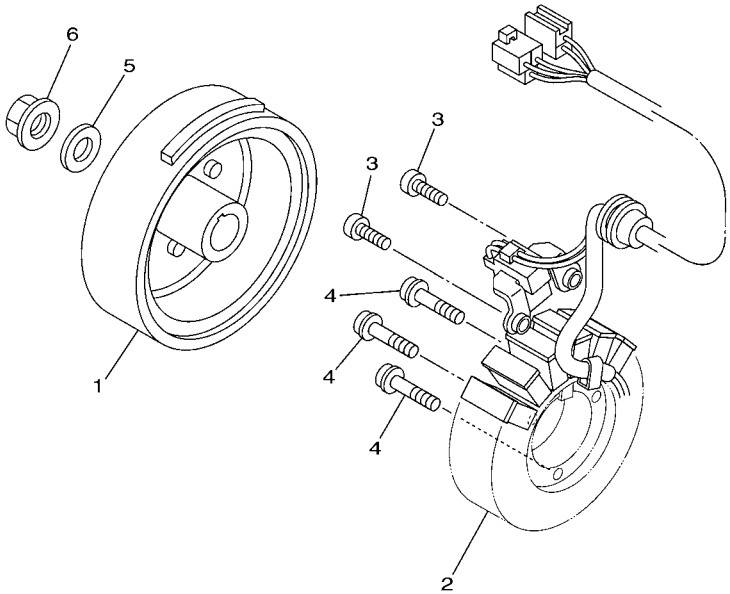

24S1210-H280

REF. Nº	CODIGO Nº PART NO.	DESCRIPCION DESCRIPTION	37D1					OBSERVACIONES REMARKS
1	1P3–H1450–00	ROTOR COMPLETO ROTOR ASSY	1					
2	5S9–H1410–00	ESTATOR COMPLETO STATOR ASSY	1					
3	98507–06016	TORNILLO DE CABEZA CON PLANA SCREW, PAN HEAD	2					
4	97607–06225	TORNILLO CAB CON PLANA C/ARAN SCREW,WITH WASHER	3					
5	90201–12688	ARANDELA PLANA WASHER, PLATE	1					
6	90179–12248	TUERCA NUT	1					

FIG. 29 MOTOR DE ARRANQUE STARTING MOTOR

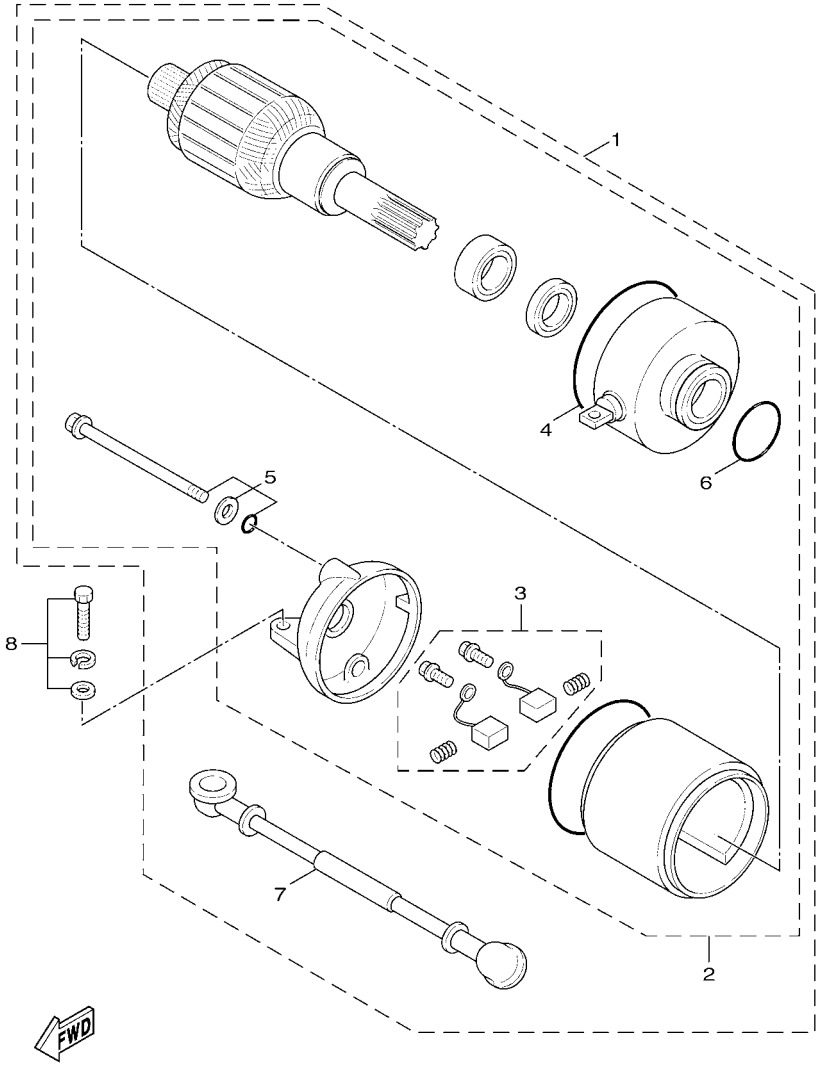

REF. Nº	CODIGO Nº PART NO.	DESCRIPCION DESCRIPTION	37D1					OBSERVACIONES REMARKS
1	5S9–H1800–00	MOTOR DE ARRANQUE COMPLETO STARTING MOTOR ASSY	1					
2	5S9–W8180–00	.JUEGO DE ELECTRICO MOTOR .ELECTRIC STARTER KIT	1					
3	3KW–H1801–00	..JUEGO DE ESCOBILLA ..BRUSH SET	1					
4	93210–55669	..ANILLO O ..O-RING	1					
5	5S9–H1828–00	..TORNILLO DE EMPUJE 2 ..BOLT 2	1					
6	93210–26668	..ANILLO O ..O-RING	1					
7	5S9–H183G–00	.CABLE DEL MOTOR COMPL. .CORD COMP.	1					
8	97507–06525	PERNO CON ARANDELA BOLT, WITH WASHER	2					

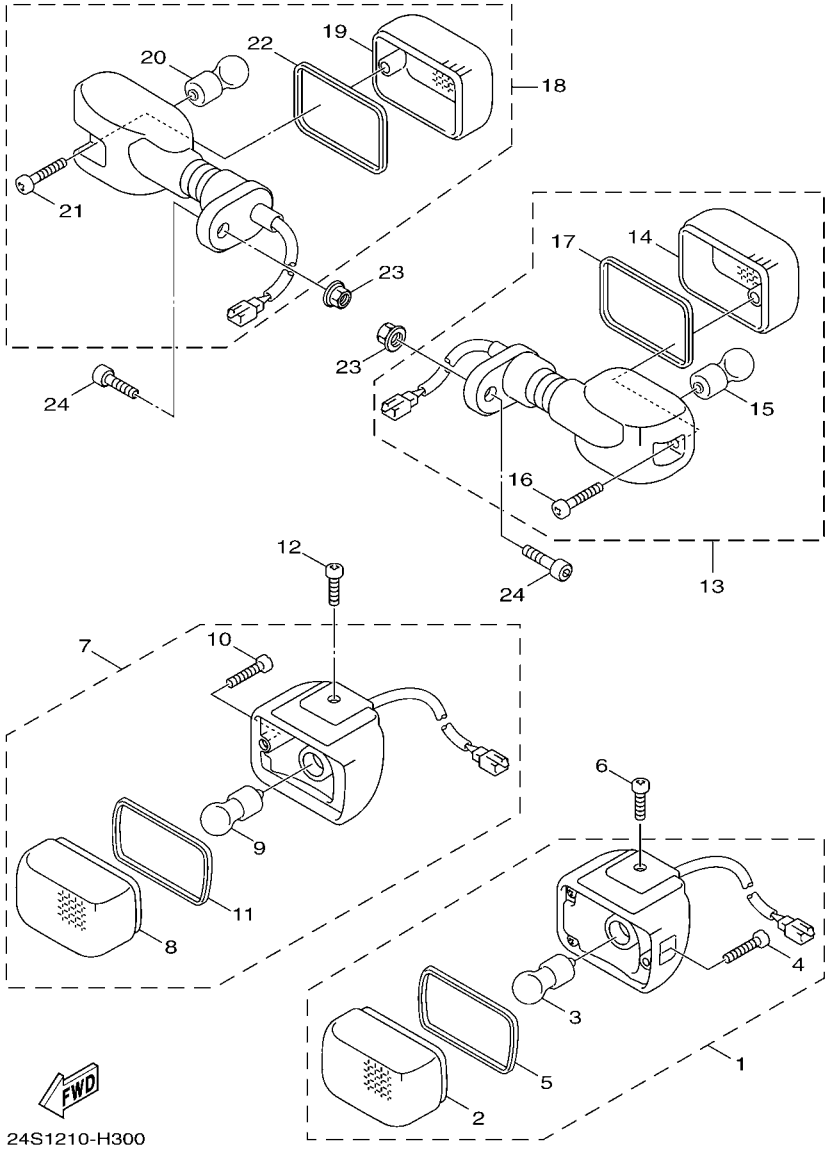

FIG. 30 LUZ DE DESTELLADOR FLASHER LIGHT

REF. Nº	CODIGO Nº PART NO.	DESCRIPCION DESCRIPTION	37D1					OBSERVACIONES REMARKS
1	5S9–H3310–00	DESTELLADOR DE LUZ DELANT. FRONT FLASHER LIGHT ASSY 1	1					
2	5S9–H3312–00	.LENTE DE DESTELLADOR .LENS, FLASHER	1					
3	5FM–H3311–00	.BOMBILLA (12V-10W) .BULB, FLASHER (12V-10W)	1					
4	5S9–H3333–00	.TORNILLO ACCESORIO DE LENTE .SCREW, LENS FITTING	1					
5	5S9–H3313–00	.EMPAQUE DE LENTE DESTELLADOR .GASKET, FLASHER LENS	1					
6	92012–05010	PERNO BOLT, BUTTON HEAD	1					
7	5S9–H3320–00	DESTELLADOR DE LUZ DELANT. FRONT FLASHER LIGHT ASSY 2	1					
8	5S9–H3312–00	.LENTE DE DESTELLADOR .LENS, FLASHER	1					
9	5FM–H3311–00	.BOMBILLA (12V-10W) .BULB, FLASHER (12V-10W)	1					
10	5S9–H3333–00	.TORNILLO ACCESORIO DE LENTE .SCREW, LENS FITTING	1					
11	5S9–H3313–00	.EMPAQUE DE LENTE DESTELLADOR .GASKET, FLASHER LENS	1					
12	92012–05010	PERNO BOLT, BUTTON HEAD	1					
13	5S9–H3330–00	DESTELLADOR DE LUZ TRAS.COMPL. REAR FLASHER LIGHT ASSY 1	1					
14	5S9–H3312–00	.LENTE DE DESTELLADOR .LENS, FLASHER	1					
15	5FM–H3311–00	.BOMBILLA (12V-10W) .BULB, FLASHER (12V-10W)	1					
16	5S9–H3333–00	.TORNILLO ACCESORIO DE LENTE .SCREW, LENS FITTING	1					
17	5S9–H3313–00	.EMPAQUE DE LENTE DESTELLADOR .GASKET, FLASHER LENS	1					
18	5S9–H3340–00	DESTELLADOR DE LUZ TRAS.COMPL. REAR FLASHER LIGHT ASSY 2	1					
19	5S9–H3312–00	.LENTE DE DESTELLADOR .LENS, FLASHER	1					
20	5FM–H3311–00	.BOMBILLA (12V-10W) .BULB, FLASHER (12V-10W)	1					
21	5S9–H3333–00	.TORNILLO ACCESORIO DE LENTE .SCREW, LENS FITTING	1					
22	5S9–H3313–00	.EMPAQUE DE LENTE DESTELLADOR .GASKET, FLASHER LENS	1					
23	95707–06500	TUERCA DE BRIDA NUT, FLANGE	2					
24	90110–06852	TORNILLO ALLEN BOLT, HEXAGON SOCKET HEAD	2					

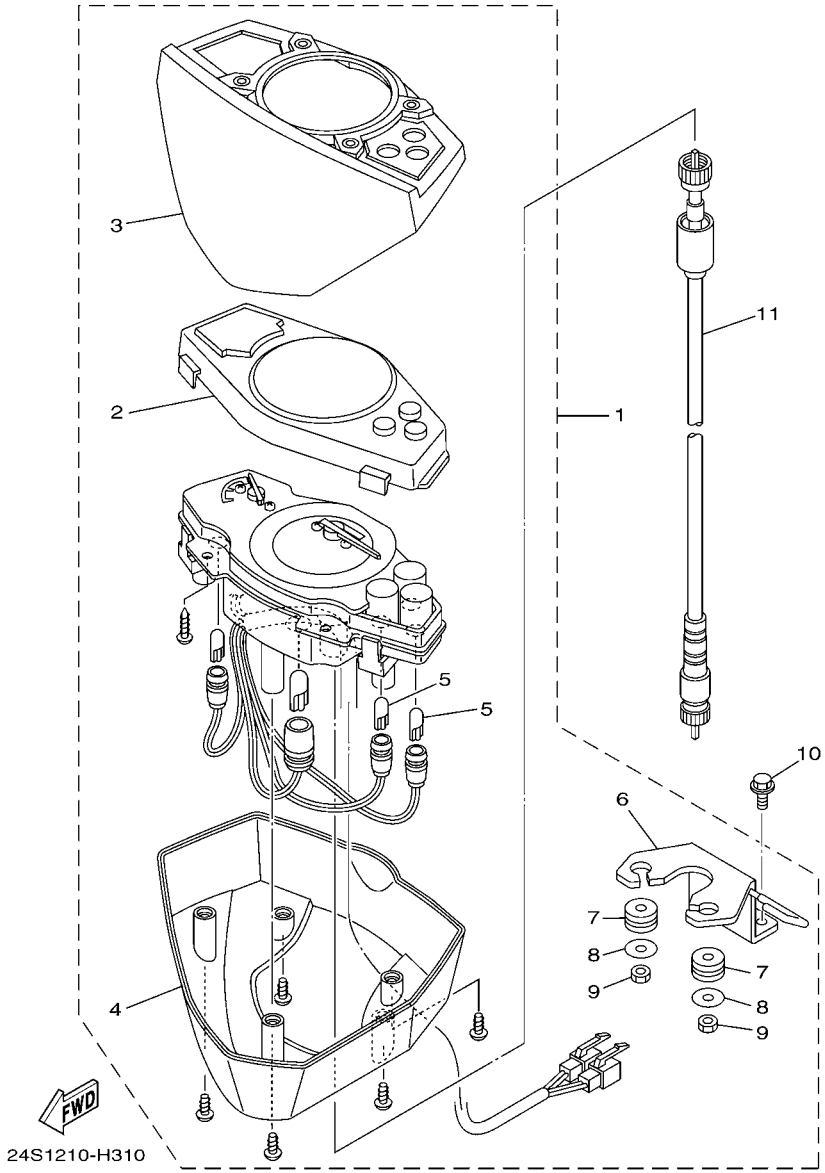

FIG. 31 MEDIDOR METER

REF. Nº	CODIGO Nº PART NO.	DESCRIPCION DESCRIPTION	37D1					OBSERVACIONES REMARKS
1	24P–H3500–00	METRO COMPLETO METER ASSY	1					
2	5S9–H353K–00	.CUBIERTA DE MEDIDOR .GLASS PLATE	1					
3	5S9–H353E–00	.CAJA DE MEDIDOR SUPERIOR .COVER, SPEEDOMETER	1					
4	5S9–H3507–00	.CUBIERTA DE VELOCIMETRO .CASE COMP, UNDER	1					
5	5JS–H3517–00	.AMPOLLETA (12V-1.7W) .BULB (12V-1.7W)	2					
6	5S9–H3519–00	.SOPORTE DE MEDIDOR .BRACKET, METER	1					
7	5ST–H3513–00	.AMORTIGUADOR .DAMPER	2					
8	5ST–H3663–00	.ARANDELA .WASHER, SPECIAL	2					
9	5ST–H354P–00	.TUERCA .NUT	2					
10	95027–06012	PERNO, DE BRIDA BOLT, FLANGE	2					
11	5S9–H3550–00	CABLE DE VELOCIMETRO COMPLETO SPEEDOMETER CABLE ASSY	1					

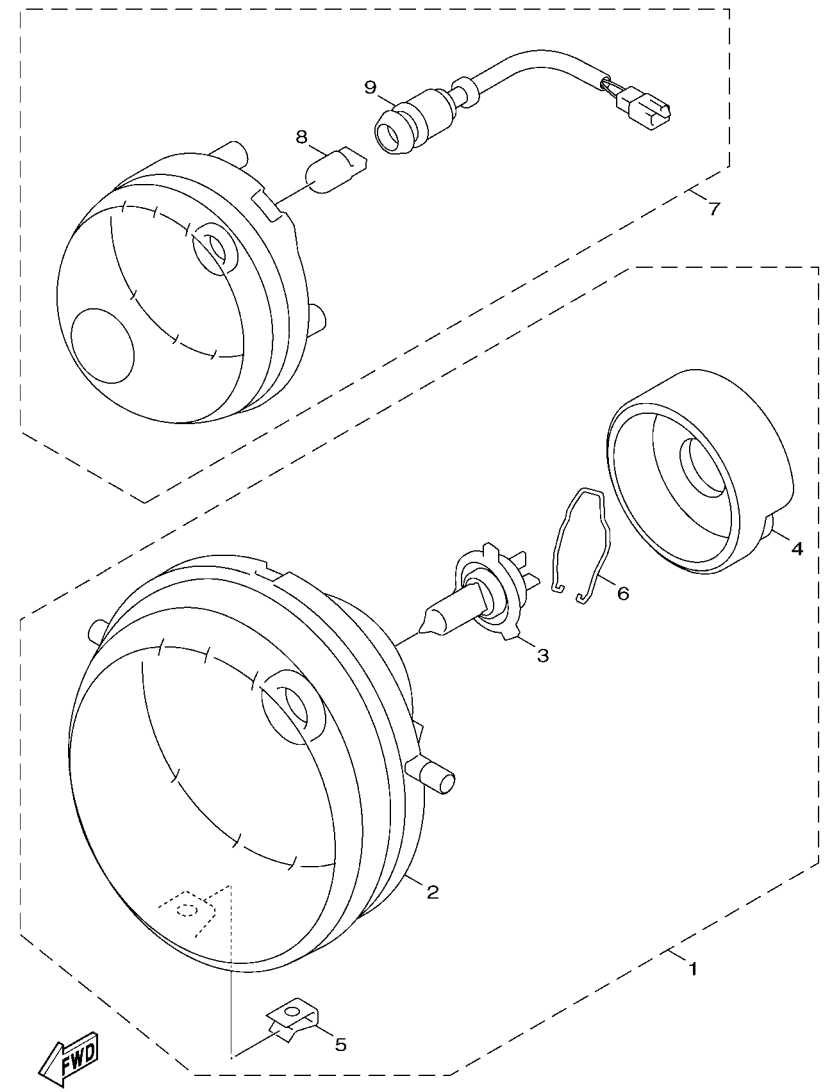

FIG. 32 FARO DELANTERO HEADLIGHT

REF. Nº	CODIGO Nº PART NO.	DESCRIPCION DESCRIPTION	37D1					OBSERVACIONES REMARKS
1	5S9–H4310–00	UNIDAD DE FARO DELANTERO COMPL HEADLIGHT UNIT ASSY	1					
2	5S9–H430A–00	.UNIDAD DE FARO DELANTERO COMPL .HEADLIGHT UNIT ASSY	1					
3	5ST–H4314–00	.BOMBILLA (12V-35/35W) .BULB, HEADLIGHT (12V-35/35W)	1					
4	5ST–H4378–10	.TAPA .CAP	1					
5	5S9–H4334–00	.TUERCA DE AJUSTE .NUT, ADJUSTING	1					
6	5ST–H4335–00	.RESORTE .SPRING	1					
7	5S9–H4301–00	LUZ PILOTO COMPLETA 1 PILOT LIGHT ASSY 1	1					
8	5SK–H4347–00	.BOMBILLA (12V-5W) .BULB (12V-5W)	1					
9	5S9–H4312–00	.CABLE COMPLETA .CORD ASSY	1					

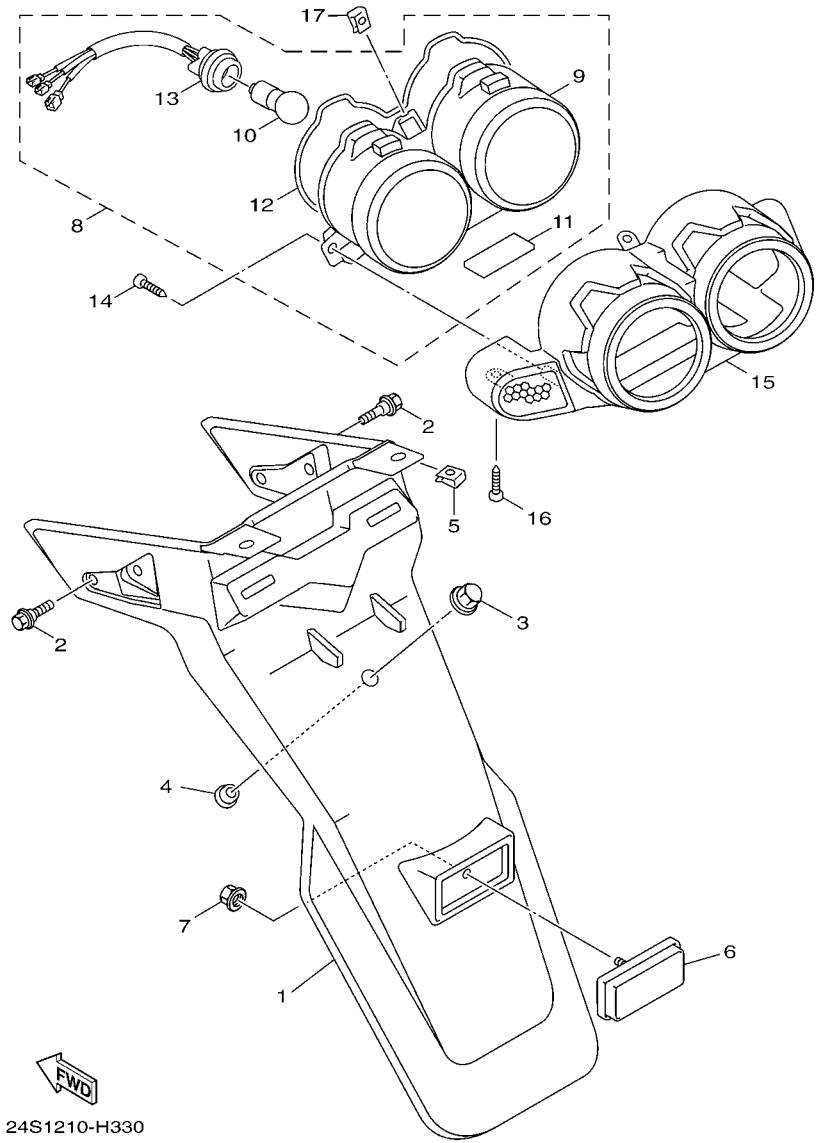

FIG. 33 LUZ DE COLA — TAILLIGHT

REF. Nº	CODIGO Nº PART NO.	DESCRIPCION DESCRIPTION	37D1					OBSERVACIONES REMARKS
1	5S9–F1685–00	SOPORTE DE LICENCIA BRACKET, LICENSE	1					
2	90109–06043	PERNO BOLT	2					
3	90176–06065	TUERCA CORONA NUT, CROWN	1					
4	90387–06868	ESPACIADOR COLLAR	1					
5	90183–05807	TUERCA DE RESORTE NUT, SPRING	2					
6	3KW–H5130–00	REFLECTOR TRASERO COMPLETO REAR REFLECTOR ASSY	1					
7	95707–05300	TUERCA DE BRIDA NUT, FLANGE	1					
8	5S9–H4700–00	FARO TRASERO COMPLET. TAILLIGHT ASSY	1					
9	5S9–H4721–00	.LENTE DE FARO TRASERO .LENS, TAILLIGHT	1					
10	4TE–H4714–10	.BOMBILLA (12V-18/5W) .BULB (12V-18/5W)	1					
11	5S9–H4743–00	.LENTE DE LUZ DE LICENCIA .LENS, LICENCE LIGHT	1					
12	5S9–H4723–00	.EMPAQUE LENTE FARO TRASERO .GASKET, TAIL LENS	1					
13	5S9–H473A–00	.CABLE COMPLETA .CORD ASSY	1					
14	97707–50016	TORNILLO SCREW, TRUSS HEAD TAPPING	2					
15	5S9–H4716–00	CUBIERTA DE FARO TRASERO COVER, TAILLIGHT	1					
16	97707–50012	TORNILLO SCREW, TRUSS HEAD TAPPING	2					
17	90183–05807	TUERCA DE RESORTE NUT, SPRING	1					

FIG. 34 INTERRUPTOR DE MANILLAR&PALANC HANDLE SWITCH & LEVER

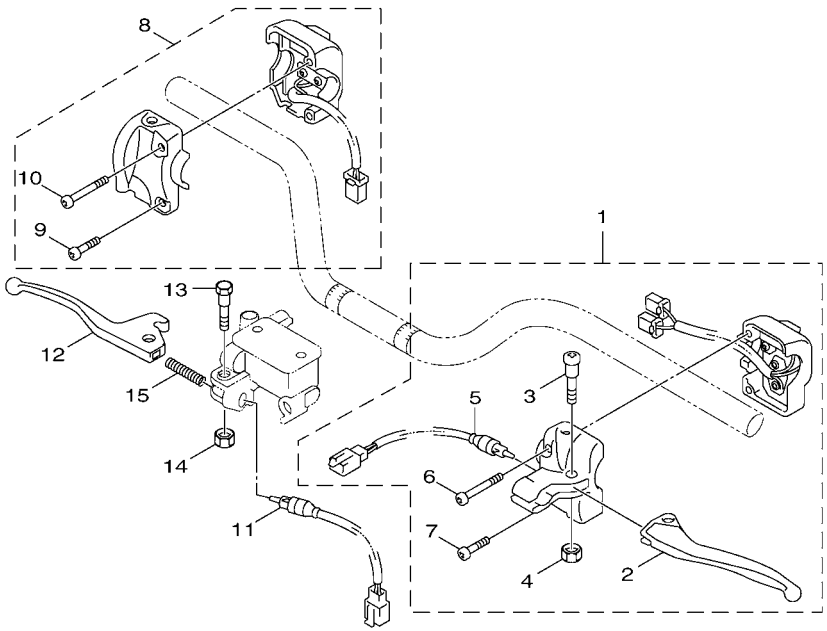

REF. Nº	CODIGO Nº PART NO.	DESCRIPCION DESCRIPTION	37D1					OBSERVACIONES REMARKS
1	24P–H2910–00	SOPORTE DE LEVA COMPLT 1 LEVER HOLDER ASSY (LEFT)	1					
2	4VP–H3912–10	.PALANCA 1 .LEVER 1	1					
3	3XG–H3915–00	.TORNILLO ACCESORIO DE PALANCA .SCREW, LEVER FITTING	1					
4	95607–05100	.TUERCA AUTOBLOCANTE .NUT, U	1					
5	5S9–H3980–10	.INTERRUP. DE PARADA DELANTERO .FRONT STOP SWITCH ASSY	1					
6	98507–05035	.TORNILLO DE CABEZA PLANA .SCREW, PAN HEAD	1					
7	98507–05040	.TORNILLO DE CABEZA PLANA .SCREW, PAN HEAD	1					
8	5S9–H3976–00	INTERRUPTOR DE MANIJA 1 SWITCH, HANDLE 1	1					
9	98507–05035	.TORNILLO DE CABEZA PLANA .SCREW, PAN HEAD	1					
10	98507–05040	.TORNILLO DE CABEZA PLANA .SCREW, PAN HEAD	1					
11	5S9–H3980–00	INTERRUP. DE PARADA DELANTERO FRONT STOP SWITCH ASSY	1					
12	4VP–H3922–10	PALANCA 2 LEVER 2	1					
13	90109–06577	PERNO BOLT	1					
14	95607–06100	TUERCA AUTOBLOCANTE NUT, U	1					
15	90501–10312	RESORTE DE COMPRESION SPRING, COMPRESSION	1					

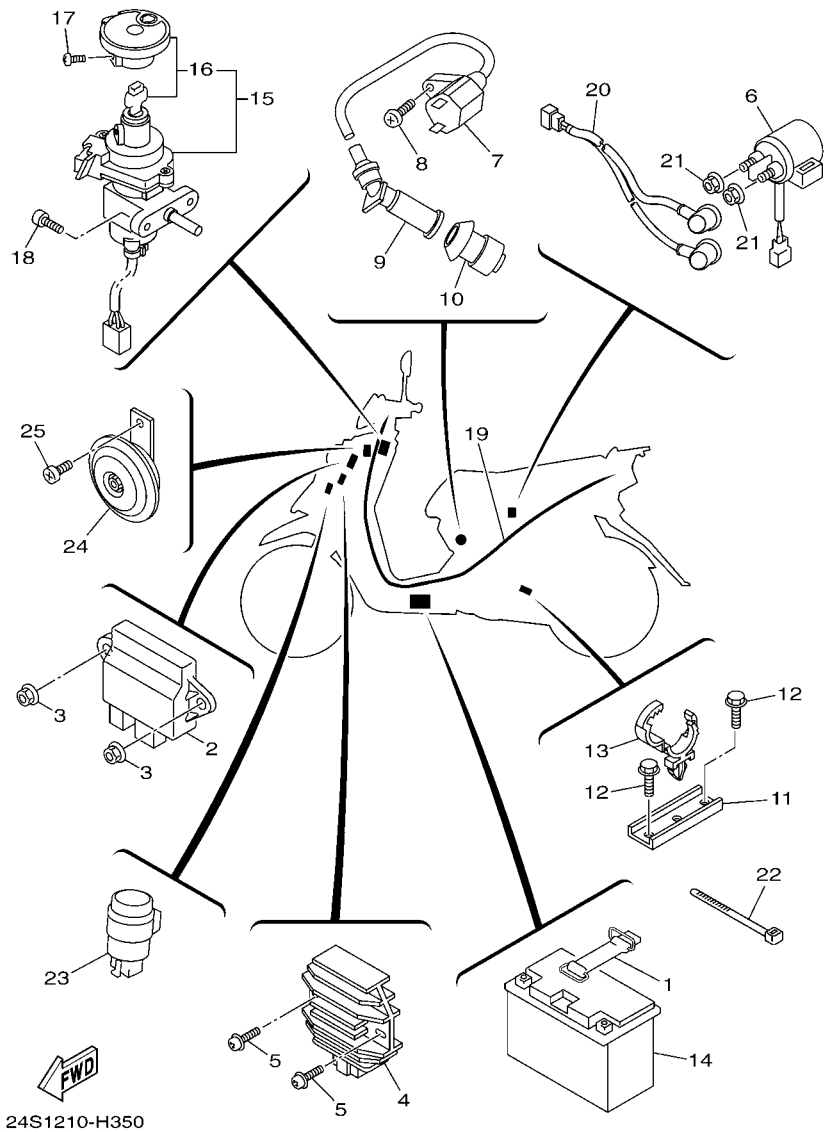

FIG. 35 EQUIPO ELECTRICO 1 ELECTRICAL 1

REF. Nº	CODIGO Nº PART NO.	DESCRIPCION DESCRIPTION	37D1					OBSERVACIONES REMARKS
1	5S9–H2131–00	TIRANTE DE BATERIA BAND, BATTERY	1					
2	24P–H5540–00	UNIDAD C.D.I. COMPLETA C.D.I. UNIT ASSY	1					
3	95707–05500	TUERCA DE BRIDA NUT, FLANGE	2					
4	5ML–H1960–00	RECTIFICADOR Y REGULADOR RECTIFIER & REGULATOR ASSY	1					
5	97607–06220	TORNILLO CAB CON PLANA C/ARAN SCREW,WITH WASHER	2					
6	5S9–H1940–00	CONJUNTO ARRANCADOR RELEVO STARTER RELAY ASSY	1					
7	24P–H2310–00	BOBINA DE ENCENDIDO COMPLETA IGNITION COIL ASSY	1					
8	98507–05020	TORNILLO DE CABEZA PLANA SCREW, PAN HEAD	1					
9	5ML–H2370–01	TAPON DE BUJIA COMPLT PLUG CAP ASSY	1					
10	4P9–H2372–00	SELLO DE TAPON SEAL, PLUG CAP	1					
11	4P9–E546C–00	SOPORTE HOLDER	1					
12	97527–06512	PERNO CON ARANDELA BOLT, WITH WASHER	2					
13	90464–25803	BRIDA CLAMP	1					
14	1P3–H2100–10	BATERIA COMPLETA(YUASA YT7B-BS BATTERY ASSY (YUASA YT7B-BS)	1					
15	5S9–H2501–00	LLAVE DE IGNICION COMPLT MAIN SWITCH STEERING LOCK	1					
	5S9–WH203–00	JUEGO DE LLAVE KEY SET	1					AP AP
16	5S9–WH250–00–A0	.OBTURADOR Y LLAVE EN BLANCO .SHUTTER & BLANK KEY	1					UR UR
	5S9–WH250–00–C0	.OBTURADOR Y LLAVE EN BLANCO .SHUTTER & BLANK KEY	1					UR UR
17	90119–05004	TORNILLO CON ARANDELA BOLT, WITH WASHER	1					
18	98507–06014	TORNILLO DE CABEZA CON PLANA SCREW, PAN HEAD	2					
19	24P–H2590–00	CONJUNTO DE CABLES WIRE HARNESS ASSY	1					
20	5S9–H2541–00	CABLE CONDUCTOR WIRE, LEAD	1					
21	95307–06700	TUERCA NUT	2					
22	90464–40801	BRIDA CLAMP	1					
23	5CP–H3350–00	RELE DE DESTELLADOR COMPL. FLASHER RELAY ASSY	1					
24	24P–H3371–00	BOCINA HORN	1					
25	98507–06012	TORNILLO DE CABEZA PLANA SCREW, PAN HEAD	1					

INDICE NUMERICO
NUMERICAL INDEX

CODIGO Nº PART NO.	REF. Nº
5ML–12113–00	3 – 4
663–14159–00	7 – 14
4JH–14160–00	7 – 11
3TJ–14191–40	7 – 27
5JG–14531–00	7 – 21
3TJ–14536–40	7 – 26
3TJ–14562–40	7 – 13
688–14592–00	7 – 16
4DH–14613–00	8 – 15
5BE–14937–00	7 – 24
3TJ–14952–40	7 – 12
24P–E1102–00	1 – 1
5ML–E111F–00	3 – 22
1P3–E1133–10	1 – 2
1P3–E1134–10	1 – 3
5ML–E1145–00	3 – 14
4CW–E1155–00	1 – 13
5ML–E1160–00	1 – 9
5ML–E1165–00	1 – 11
5ML–E1181–00	1 – 21
5ML–E1185–00	1 – 10
5ML–E1186–00	1 – 16
5ML–E1311–20	1 – 25
5ML–E1351–20	1 – 26
5ML–E1391–00	1 – 30
5ML–E1392–00	1 – 31
5S9–E1400–00	2 – 1
1P3–E1422–00	2 – 5
4C6–E1603–00	2 – 13
5ML–E1631–10	2 – 10
5LW–E1633–00	2 – 11
5LW–E1651–00	2 – 4
5ML–E1681–00	2 – 2
4C6–E2111–00	3 – 1
4C6–E2117–00	3 – 6
5WG–E2118–00	3 – 5
5ML–E2119–00	3 – 3
4C6–E2121–00	3 – 2
1P3–E2151–00	3 – 7
5HK–E2156–00	3 – 11
4CW–E2157–00	3 – 25
5FM–E2159–00	3 – 9
1P3–E2161–00	3 – 8
5S9–E2170–01	3 – 12
5LW–E2176–00	3 – 13
5ML–E2210–00	3 – 19
4DH–E2213–01	3 – 20
5ML–E2231–00	3 – 17

CODIGO Nº PART NO.	REF. Nº
4CW–E2232–00	3 – 26
5ML–E2241–00	3 – 18
5TY–E2611–00	4 – 9
5S9–E262H–00	4 – 15
5ML–E2651–00	4 – 1
5ML–E2652–00	4 – 4
5ML–E2653–01	4 – 11
5ML–E2658–00	4 – 6
5ML–E2659–00	4 – 7
5ML–E2668–00	4 – 2
1P3–E3300–00	5 – 1
1P3–E3316–00	5 – 2
1P3–E3318–00	5 – 4
5ML–E3324–00	2 – 8
1P3–E3325–00	5 – 3
1P3–E3362–00	5 – 5
1P3–E3364–00	5 – 6
5ST–E3365–00	5 – 7
5ML–E3411–00	5 – 11
5ML–E3416–00	9 – 13
5ML–E3452–00	2 – 6
5ML–E3474–00	6 – 6
5ML–E3475–00	5 – 8
5ML–E3556–20	6 – 3
3KW–E3569–00	4 – 3
5ML–E3575–00	6 – 17
24P–E3585–00	6 – 1
5ML–E3595–00	6 – 2
5ML–E3769–00	9 – 39
24P–E414G–00	7 – 8
24P–E4196–00	7 – 23
24P–E4211–00	7 – 10
5TY–E4245–00	7 – 18
5TY–E4245–10	7 – 19
5ML–E4386–00	7 – 35
24P–E4410–00	6 – 7
5S9–E443E–00	6 – 12
5JS–E4445–00	8 – 8
5S9–E4451–00	6 – 10
5S9–E4467–00	6 – 9
5ML–E4590–00	7 – 34
5ML–E4592–00	7 – 33
24P–E4610–00–98	8 – 1
5JS–E4617–00	8 – 10
24P–E4708–00	8 – 5
5ML–E4737–10	8 – 4
5JS–E4759–00	8 – 9
4CW–E4766–00	8 – 6

CODIGO Nº PART NO.	REF. Nº
5JS–E4779–00	8 – 7
5ML–E4854–00	7 – 29
5TY–E4871–00	7 – 28
24P–E4901–00	7 – 1
5TY–E4916–00	7 – 3
5TY–E4922–00	7 – 20
5UA–E4926–00	7 – 38
24P–E4933–00	7 – 5
5TY–E4936–00	7 – 4
24P–E4940–00	7 – 2
24P–E4943–28	7 – 9
5ML–E4945–00	7 – 30
5TY–E4947–00	7 – 7
5ML–E4958–00	7 – 37
5TY–E4958–00	7 – 6
5TY–E4967–00	7 – 22
5ML–E4969–00	7 – 31
24P–E4980–00	7 – 36
5TY–E4984–00	7 – 32
5TY–E4985–00	7 – 15
1P5–E4987–00	1 – 27
5TY–E4994–00	7 – 25
5ML–E5113–00	9 – 37
5ML–E5138–00	9 – 4
5ML–E5191–00	9 – 26
5ML–E5351–20	5 – 10
5S9–E5362–00	9 – 38
4Y4–E5363–00	9 – 16
5CA–E5371–00	9 – 5
5ML–E5404–00	9 – 41
5ML–E5407–00	9 – 40
24P–E5411–01	9 – 22
5ML–E5417–00	9 – 29
5S9–E5421–00	9 – 18
5S9–E5451–10	9 – 23
5ML–E5453–00	9 – 32
5ML–E5455–00	9 – 27
5S9–E5461–00	9 – 19
4P9–E546C–00	35 – 11
5ML–E5472–00	9 – 44
4DM–E5481–00	9 – 47
5CA–E5521–00	10 – 7
5S9–E5524–00	10 – 1
5S9–E5532–00	10 – 9
5LW–E5538–00	10 – 3
5TY–E5570–01	10 – 4
5ML–E5601–00	10 – 13
5ML–E5620–00	10 – 18

CODIGO Nº PART NO.	REF. Nº
5TY–E5645–00	10 – 11
5S9–E5650–00	10 – 5
5ML–E5657–00	11 – 13
5ML–E5659–00	10 – 20
5ML–E5670–00	10 – 21
5ML–E5673–00	10 – 22
5CA–E6111–01	11 – 1
4CW–E6611–00	11 – 4
1P5–E6620–01	11 – 26
1P5–E6626–00	11 – 27
5S9–E7211–00	12 – 5
5S9–E7410–00	12 – 1
5S9–E7421–00	12 – 4
4HP–E7611–00	11 – 17
5ML–E7620–02	11 – 7
5ML–E7623–00	11 – 10
24P–E7632–00	11 – 9
5S9–E7641–00	11 – 16
5TY–E7644–01	11 – 25
4CW–E7653–00	11 – 11
4CW–E7660–01	11 – 19
4CW–E7664–00	11 – 23
5S9–E7670–00	11 – 20
24P–F1110–00–7M	13 – 1
5S9–F128A–00	13 – 17
5S9–F1398–00	19 – 9
5S9–F1420–00	13 – 2
5ML–F1480–10	13 – 7
3UH–F1481–00	13 – 4
5ML–F1481–00	13 – 12
5S9–F1482–00	13 – 8
5S9–F1511–00	14 – 1
5S9–F1535–00	26 – 6
5ML–F1544–01	13 – 10
5S9–F1552–00	14 – 4
4JK–F1568–00	26 – 11
5CA–F1639–00	14 – 8
24P–F1668–00	26 – 24
5S9–F1685–00	33 – 1
5S9–F1711–00	15 – 1
5S9–F171E–00	15 – 11
5S9–F1741–00	15 – 10
3UH–F1753–00	18 – 22
4TE–F1753–00	18 – 11
24S–F1781–00	15 – 7
	15 – 9
24S–F1781–10	15 – 7
	15 – 9

CODIGO Nº PART NO.	REF. Nº
24S–F1781–20	15 – 7
	15 – 9
24P–F1782–00	15 – 7
24P–F1783–00	15 – 9
5CA–F1823–00	26 – 21
5S9–F2110–01	16 – 1
3UH–F2184–00	16 – 5
24P–F2210–00	16 – 9
4X6–F2216–00	9 – 2
	16 – 8
5S9–F3100–00	17 – 1
5S9–F3102–00	17 – 2
5S9–F3103–00	17 – 20
5S9–F3110–00	17 – 4
	17 – 22
4C6–F3113–00	17 – 15
	17 – 33
5S9–F3126–00	17 – 3
5S9–F3136–00	17 – 21
5S9–F3141–00	17 – 13
	17 – 31
5S9–F3142–00	17 – 5
	17 – 23
4C6–F3145–00	17 – 11
	17 – 29
4C6–F3147–00	17 – 14
	17 – 32
4C6–F3151–00	17 – 7
	17 – 25
4C6–F3153–00	17 – 42
4C6–F3154–00	17 – 17
	17 – 35
4C6–F3155–00	17 – 16
	17 – 34
4C6–F3157–00	17 – 12
	17 – 30
4C6–F3158–00	17 – 9
	17 – 27
4C6–F3171–00	17 – 8
	17 – 26
4C6–F3181–00	17 – 10
	17 – 28
4C6–F318X–00	17 – 6
	17 – 24
4C6–F3191–00	17 – 18
	17 – 36
4C6–F3192–00	17 – 19
	17 – 37

CODIGO Nº PART NO.	REF. Nº
5S9–F3317–00	17 – 43
5S9–F3340–00	17 – 38
4C6–F3346–00	17 – 41
4C6–F3411–10	17 – 40
4C6–F3412–00	17 – 45
4C6–F3413–00	17 – 48
4C6–F3414–00	17 – 47
4C6–F3416–00	17 – 50
4VP–F3418–00	17 – 53
4C6–F341D–00	17 – 49
4C6–F341E–00	17 – 46
1MH–F3441–01–35	23 – 4
5FH–F3442–00	23 – 3
5S9–F3461–00	23 – 2
3KW–F3462–00	17 – 39
1MH–F3469–00	23 – 6
24P–F4110–00–33	18 – 1
3UH–F4112–00	18 – 20
5S9–F414A–00	18 – 10
24P–F4311–00	18 – 16
24P–F4313–00	18 – 23
24P–F4316–00	18 – 18
3UH–F4376–00	18 – 14
4TE–F4500–00	18 – 6
4CW–F452K–00	18 – 7
5S9–F4602–00	18 – 26
5S9–F467E–00	18 – 27
5S9–F4730–00	19 – 1
5S9–F4735–00	19 – 13
24P–F473R–00	19 – 3
1B6–F4742–00	19 – 6
5S9–F475M–00	19 – 2
5S9–F4772–00	19 – 14
4UE–F4780–02	19 – 17
5S9–F478E–00	19 – 19
5S9–F4842–00–7M	19 – 11
5ML–F5168–20–33	20 – 1
5S9–F5181–00	20 – 9
5ML–F5183–00	20 – 2
5S9–F5190–00	20 – 11
5S9–F5315–00	16 – 7
5ML–F5326–00	22 – 13
5ML–F5338–20–33	22 – 1
4VP–F533A–00	22 – 10
5S9–F5351–00	22 – 9
5S9–F5355–00	22 – 11
5ML–F5377–00	22 – 16
5S9–F580T–00	21 – 3

INDICE NUMERICO
NUMERICAL INDEX

CODIGO Nº PART NO.	REF. Nº
5S9–F582U–00	21 – 1
5S9–F5852–00	24 – 4
5S9–F5854–00	24 – 3
3GF–F5867–00	24 – 6
5S9–F5870–00	24 – 1
5S9–F5872–00	24 – 8
5S9–F5875–00	24 – 11
5S9–F5876–00	24 – 14
5S9–F5913–00	21 – 10
5S9–F5917–00	21 – 8
5S9–F5919–00	21 – 11
5S9–F5924–00	21 – 12
5S9–F5925–00	21 – 13
5S9–F5937–00	21 – 9
5S9–F6111–00	23 – 1
5S9–F612K–00	27 – 8
5S9–F612L–00	27 – 12
5S9–F6141–00	27 – 5
5S9–F6142–00	27 – 9
5S9–F6143–01	27 – 3
4DH–F6199–01	15 – 4
5S9–F6240–00	23 – 13
4VP–F6241–01	23 – 12
4VP–F6280–00	27 – 2
4VP–F6290–00	27 – 1
24P–F6311–00	23 – 14
24P–F6312–00	23 – 15
5S9–F6351–00	23 – 17
5S9–F637H–00	23 – 22
5ML–F7113–00	25 – 13
5S9–F7114–01	25 – 8
5ML–F7117–00	25 – 9
5ML–F7121–00	25 – 12
5S9–F7244–00	25 – 16
5SU–F7254–01	25 – 17
5S9–F7311–00	25 – 18
5HK–F7475–00	25 – 3
5S9–F7481–00	25 – 1
4CW–F8100–00	13 – 23
5S9–F8257–00	26 – 15
5S9–F8312–00	26 – 9
24P–F8315–00	26 – 3
24P–F8315–10	26 – 3
24P–F8315–20	26 – 3
24P–F8315–30	26 – 3
24P–F832D–00	26 – 2
5FM–F8349–00	26 – 14
5S9–F8372–00	26 – 18

CODIGO Nº PART NO.	REF. Nº
5S9–F8372–00	26 – 27
5ML–F838N–00	26 – 19
5ML–F838R–00	26 – 20
5S9–F840K–00–7M	26 – 5
5S9–H1410–00	28 – 2
1P3–H1450–00	28 – 1
5S9–H1800–00	29 – 1
3KW–H1801–00	29 – 3
5S9–H1828–00	29 – 5
5S9–H183G–00	29 – 7
5S9–H1940–00	35 – 6
5ML–H1960–00	35 – 4
1P3–H2100–10	35 – 14
5S9–H2129–00	25 – 4
5S9–H2131–00	35 – 1
24P–H2310–00	35 – 7
5ML–H2370–01	35 – 9
4P9–H2372–00	35 – 10
5S9–H2501–00	35 – 15
5S9–H2541–00	35 – 20
24P–H2590–00	35 – 19
24P–H2910–00	34 – 1
5S9–H3310–00	30 – 1
5FM–H3311–00	30 – 3
	30 – 9
	30 – 15
	30 – 20
5S9–H3312–00	30 – 2
	30 – 8
	30 – 14
	30 – 19
5S9–H3313–00	30 – 5
	30 – 11
	30 – 17
	30 – 22
5S9–H3320–00	30 – 7
5S9–H3330–00	30 – 13
5S9–H3333–00	30 – 4
	30 – 10
	30 – 16
	30 – 21
5S9–H3340–00	30 – 18
5CP–H3350–00	35 – 23
24P–H3371–00	35 – 24
24P–H3500–00	31 – 1
5S9–H3507–00	31 – 4
5ST–H3513–00	31 – 7
5JS–H3517–00	31 – 5

CODIGO Nº PART NO.	REF. Nº
5S9–H3519–00	31 – 6
5S9–H353E–00	31 – 3
5S9–H353K–00	31 – 2
5ST–H354P–00	31 – 9
5S9–H3550–00	31 – 11
5ST–H3663–00	31 – 8
4VP–H3912–10	34 – 2
3XG–H3915–00	34 – 3
4VP–H3922–10	34 – 12
31U–H3936–00	23 – 11
5S9–H3976–00	34 – 8
5S9–H3980–00	34 – 11
5S9–H3980–10	34 – 5
5S9–H4301–00	32 – 7
5S9–H430A–00	32 – 2
5S9–H4310–00	32 – 1
5S9–H4312–00	32 – 9
5ST–H4314–00	32 – 3
5S9–H4334–00	32 – 5
5ST–H4335–00	32 – 6
5SK–H4347–00	32 – 8
5ST–H4378–10	32 – 4
5S9–H4700–00	33 – 8
4TE–H4714–10	33 – 10
5S9–H4716–00	33 – 15
5S9–H4721–00	33 – 9
5S9–H4723–00	33 – 12
5S9–H473A–00	33 – 13
5S9–H4743–00	33 – 11
3KW–H5130–00	33 – 6
24P–H5540–00	35 – 2
53X–H5753–00	18 – 3
5S9–W0041–00	24 – 2
5S9–W0045–00	21 – 7
5S9–W0047–00	21 – 5
5S9–W0048–00	21 – 6
5S9–W0057–00	21 – 4
5S9–W8180–00	29 – 2
24P–WE441–00	6 – 8
5S9–WE442–00	6 – 11
5S9–WE511–00	9 – 1
5S9–WE512–00	9 – 3
5S9–WH203–00	35 – 15
5S9–WH250–00–A0	35 – 16
5S9–WH250–00–C0	35 – 16
24P–XE543–00	9 – 45
5S9–XF161–00	14 – 7
5S9–XF172–00–P4	15 – 6

CODIGO Nº PART NO.	REF. Nº
5S9–XF172–00–P5	15 – 6
5S9–XF172–10–AL	15 – 6
5S9–XF172–10–P0	15 – 6
5S9–XF173–00–P4	15 – 8
5S9–XF173–00–P5	15 – 8
5S9–XF173–10–AL	15 – 8
5S9–XF173–10–P0	15 – 8
5ML–XF533–00	22 – 6
5S9–XF711–02	25 – 7
5S9–XF831–10–AL	26 – 1
5S9–XF831–10–P0	26 – 1
5S9–XF831–10–P4	26 – 1
5S9–XF831–10–P5	26 – 1
5S9–XF834–00–P0	26 – 17
5S9–XH414–00	26 – 26
24P–XH575–00	18 – 2
90101–06278	22 – 12
90101–10875	16 – 11
90105–06806	9 – 36
90105–06807	9 – 35
90105–06808	9 – 9
90105–06809	9 – 34
90105–06810	9 – 10
90105–06817	9 – 11
90105–08121	16 – 10
90105–08835	8 – 19
90105–10036	23 – 9
90105–10638	21 – 14
90109–06043	33 – 2
90109–063F1	19 – 4
	26 – 23
90109–06577	34 – 13
90109–06862	26 – 12
90109–10005	25 – 19
90110–06851	26 – 7
90110–06852	30 – 24
90111–06801	8 – 12
90116–08806	1 – 5
90119–05004	26 – 25
	35 – 17
90119–05071	18 – 5
90119–06821	14 – 2
	14 – 5
90119–06857	4 – 10
90119–06874	25 – 2
90119–08848	19 – 12
90149–06011	18 – 8
90149–08814	21 – 2

CODIGO Nº PART NO.	REF. Nº
90153–06803	1 – 6
90159–05820	27 – 4
90159–06812	15 – 3
90159–06822	26 – 16
90169–05800	19 – 7
90170–05800	3 – 10
90170–36279	11 – 28
90176–06065	33 – 3
90176–08816	1 – 19
90179–06843	23 – 19
90179–08804	8 – 16
90179–12248	28 – 6
90179–14427	11 – 5
90179–25615	17 – 51
90183–05807	15 – 13
	19 – 5
	25 – 6
	33 – 5
	33 – 17
90185–10110	25 – 20
90185–10801	13 – 5
	13 – 13
	23 – 7
	23 – 10
90185–14124	22 – 4
90201–06055	8 – 11
90201–08609	1 – 18
90201–08810	25 – 11
90201–08823	23 – 8
90201–10118	24 – 10
90201–101J1	8 – 17
	16 – 13
90201–105A2	13 – 6
	13 – 9
90201–108A3	10 – 8
90201–12172	9 – 49
90201–12688	28 – 5
90201–155G5	10 – 16
90201–15830	12 – 2
90201–168S9	11 – 15
90201–220J8	22 – 5
90202–05193	18 – 9
90202–15803	13 – 11
90202–26142	17 – 52
90208–12050	11 – 14
90249–12008	23 – 20
90269–06806	15 – 2
	19 – 8

CODIGO Nº PART NO.	REF. Nº
90280–03045	2 – 9
90338–11820	6 – 15
90338–16801	26 – 8
90340–12802	9 – 48
90380–15817	10 – 15
90387–061N6	8 – 14
90387–06819	9 – 42
90387–06868	14 – 10
	27 – 7
	27 – 11
	33 – 4
90387–068C3	26 – 13
90387–068F8	14 – 3
90387–068F9	4 – 5
90387–125J1	20 – 10
90387–16801	11 – 12
90401–10805	24 – 9
90430–06014	1 – 7
90430–08816	9 – 15
90446–13803	9 – 6
90450–28802	18 – 21
90450–53061	26 – 22
90464–12812	13 – 14
	23 – 18
	23 – 24
90464–15840	13 – 22
90464–20809	13 – 15
90464–25803	35 – 13
90464–40801	13 – 3
	35 – 22
90464–60800	13 – 16
90467–08003	18 – 19
90467–09006	18 – 17
	18 – 24
90467–10041	18 – 15
90467–12052	6 – 14
	9 – 7
90467–13042	1 – 28
90467–13813	6 – 13
90480–01558	13 – 21
90480–12497	4 – 14
90480–12813	14 – 11
90480–13814	13 – 20
90480–14810	8 – 13
90501–10312	34 – 15
90501–16004	5 – 12
90501–16801	23 – 21
90501–45801	11 – 24

INDICE NUMERICO
NUMERICAL INDEX

CODIGO Nº PART NO.	REF. Nº
90506–13800	22 – 7
90506–16801	25 – 21
90506–16802	22 – 8
90506–20803	25 – 15
90506–26802	25 – 22
90506–40800	25 – 14
90508–32609	10 – 14
91317–05010	23 – 16
91317–05014	18 – 25
91317–06012	3 – 23
91317–06016	3 – 21
91317–06025	24 – 7
91317–06030	10 – 19
91317–06100	1 – 24
91317–08025	23 – 5
91810–14807	1 – 22
	1 – 23
	9 – 8
	9 – 20
	9 – 24
91A10–07005	18 – 13
91A11–07042	18 – 12
92012–05010	30 – 6
	30 – 12
92990–06600	8 – 3
93101–21170	11 – 8
93102–17853	20 – 3
93102–19293	9 – 30
93102–22800	11 – 3
93102–22843	9 – 12
93102–32800	12 – 9
93104–41119	11 – 21
93106–20813	16 – 4
93210–09802	1 – 4
93210–09859	22 – 15
93210–14802	22 – 17
93210–14805	9 – 17
93210–15862	3 – 24
93210–26668	29 – 6
93210–27800	6 – 4
93210–29800	5 – 13
93210–43800	11 – 22
93210–54008	1 – 17
93210–55669	29 – 4
93210–71462	1 – 14
93211–07801	9 – 31
93306–003Y4	9 – 50
93306–201Y7	20 – 4

CODIGO Nº PART NO.	REF. Nº
93306–202X1	16 – 6
93306–203YS	11 – 6
93306–272X0	11 – 2
93306–272Y0	12 – 8
93306–301YA	20 – 5
93306–301YL	12 – 10
93306–303Y8	12 – 7
93306–372Y3	2 – 7
93310–450X2	10 – 2
93310–528Y9	2 – 3
93311–315Y2	12 – 3
93315–110Y6	10 – 6
93450–16068	2 – 12
93900–00814	20 – 7
	22 – 3
94112–12805	20 – 6
94113–12802	22 – 2
94568–75094	3 – 16
94700–00881	1 – 20
95027–06010	9 – 28
95027–06012	10 – 10
	10 – 12
	31 – 10
95027–06016	1 – 29
95027–06020	1 – 15
95027–06025	9 – 25
95027–06030	9 – 21
95307–06700	35 – 21
95307–10800	16 – 12
95307–12700	11 – 18
95604–08200	25 – 10
95607–05100	34 – 4
95607–06100	34 – 14
95607–12200	20 – 8
95617–06625	1 – 8
95707–05300	33 – 7
95707–05500	35 – 3
95707–06500	6 – 5
	19 – 16
	30 – 23
95707–10500	22 – 14
95807–06010	13 – 18
95807–06012	19 – 15
	24 – 12
	24 – 13
95807–06016	14 – 9
	19 – 10
	19 – 18

CODIGO Nº PART NO.	REF. Nº
9580L–06010	17 – 44
95817–08016	3 – 15
	9 – 14
95817–08030	13 – 19
95817–10035	8 – 18
95827–06012	18 – 4
	23 – 23
95827–08025	16 – 3
95827–08045	16 – 2
97080–06008	8 – 2
97507–06525	29 – 8
97527–06512	1 – 12
	35 – 12
97607–06220	4 – 13
	6 – 16
	35 – 5
97607–06225	28 – 4
97607–06230	6 – 18
97707–50012	15 – 5
	15 – 12
	15 – 14
	25 – 5
	33 – 16
97707–50016	14 – 6
	26 – 4
	26 – 10
	26 – 28
	33 – 14
97707–60516	4 – 12
97707–60520	4 – 16
97707–60530	4 – 8
98502–04012	7 – 17
98507–05010	19 – 20
98507–05020	5 – 9
	35 – 8
98507–05035	34 – 6
	34 – 9
98507–05040	34 – 7
	34 – 10
98507–06012	35 – 25
98507–06014	35 – 18
98507–06016	28 – 3
98707–04012	24 – 5
98907–05014	27 – 6
	27 – 10
98907–06016	9 – 43
98907–06020	9 – 46
99009–15400	10 – 17

CODIGO Nº PART NO.	REF. Nº
99009–25400	12 – 6
99480–05010	9 – 33

CODIGO Nº PART NO.	REF. Nº

CODIGO Nº PART NO.	REF. Nº