YAMAHA

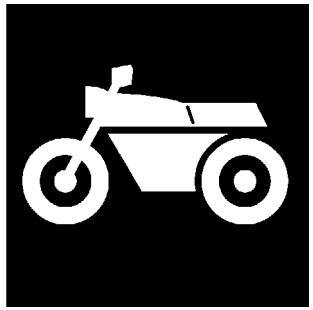

CATALOGO DE REPUESTOS

YZF-R1 (2SG5) EUROPE

1N2SG-352SA

( )

YAMAHA GENUINE Parts & Accessories

YZF-R1
CATALOGO DE REPUESTOS
©2013 por Yamaha Motor Co., Ltd.
1ª edición, agosto 2013
Todos los derechos reservados.
Toda reproducción o uso no autorizado
sin el consentimiento escrito de
Yamaha Motor Co., Ltd.
quedan expresamente prohibidos
Impreso en Japón.

PROLOGO

Este catálogo de repuestos corresponde a las piezas para el o los modelos que figuran en la página de portada. Al formular el pedido de repuestos, se ruega citar este catálogo y especificar correctamente el número y el nombre de las piezas.

1. Las modificaciones y agregados que se hayan realizado después de la edición de este Catálogo de Repuestos, serán anunciados en las Informaciones de Recambios.
   Es recomendable que se hagan las correcciones necesarias en el Catálogo de Repuestos de acuerdo con las Informaciones de Recambios.

2. Abreviaciones
   En este. Catálogo de Repuestos se emplean las siguientes abreviaciones.

   "UR" Usar el número de partes especificado
   "UN" Usar la cantidad necesaria
   "AP" Piezas sustitutivas
   "LM" Fabricación local (Hay que pedir los repuestos en las cercanías)
   "F#" Nº de bastidor (Nº aplicable a la máquina)
   "O/S" Sobredimensionado

3. La cantidad de componentes para el montaje
   - Los componentes, suministrados como conjunto, se describen con un punto (.) que precede al nombre del parte como se indica a continuación.
   - La numeración que aparece a la derecha de cada descripción indica la cantidad de partes por cada unidad de conjunto.

CODIGO Nº	DESCRIPCION	CANT.	OBSERVACIONES
2F5–83310–60	ENSAMBLAJE DE LA LUZ	2	
115–83311–60	.BOMBILLA (6V–18W)	1	

4. Los colores de los componentes se indican como sigue en la columna de "OBSERVACIONES".

CODIGO Nº	DESCRIPCION	CANT.	OBSERVACIONES
2N4–24110–00–X5	COMP. DEL TANQUE	2	MXR
3J1–24240–10	.GRAFICO, DEL TANQUE	1	PARA MXR

5. Debe tenerse en cuenta que las ilustraciones sirven como guia para la búsqueda de los números de partes y no deben usarse para el montaje. Durante el montaje, se recomienda usar el manual de taller correspondiente.

6. EL asterisco (*) antes del número de referencia indica los elementos modificados después de la primera edición.

7. Números de serie

Nº de Serie del motor

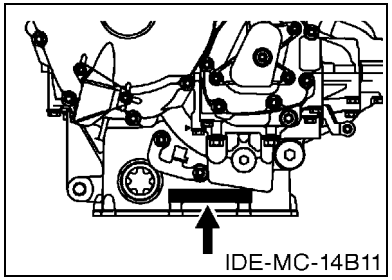

Nº de Serie del bastidor

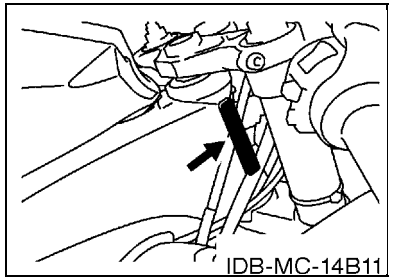

8. Códigos de color aplicables (El símbolo (*) muestra el color de modelo.)

Abreviatura	Nombre de color	Código de color
DNMN	DARK GRAY METALLIC N	1366
DPBM15	DEEP PURPLISH BLUE METALLIC 15	1329
DPBMC(*)	DEEP PURPLISH BLUE METALLIC C	0564
MBL2	MAT BLACK 2	0582

ROTULO DE MODELO

(1) El rótulo llamada “Rótulo de Modelo” está en la ubicación indicada abajo en el (3). Cuando se utilice este catálogo de repuestos, se ruega cotejar entre el “código de modelo–número de código de producción” del catálogo y el “código de modelo–número de código de producción” indicado en el Rótulo de Modelo fijado en el producto correspondiente.

(2) Indicación del “Rótulo de Modelo”

a b
○ xxxx – xxx
● x c

a: Código de tipo de Modelo
b: Número de código de Producción
c: Tipo de color

○ 4TW1–010
● A

(3) Ubicación de fijación del Rótulo de Modelo

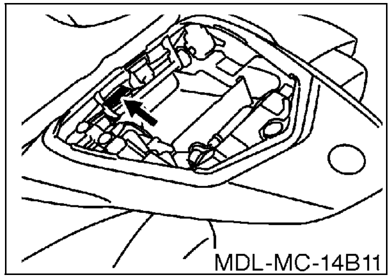

(4) Información de Color

Código de Modelo	Código de tipo de color	Código de color	Nombre de color	Abreviatura
2SG5	A	0564	DEEP PURPLISH BLUE METALLIC C	DPBMC

(5) Código de Modelo–Número de código de Producción del Modelo Listado en este Catálogo de Repuestos

Código de Modelo	Número de Código de Producción	País (destino)
2SG5	010	SPAIN

Código de Modelo	Número de Código de Producción	País (destino)

CONTENIDO

MOTOR

CULATA DE CILINDRO 1
CILINDRO 3
CIGUENAL & PISTON 4
VALVULA 5
ARBOL DE LEVAS & CADENA 7
BOMBA DE AGUA 8
RADIADOR & MANGUERA 10
BOMBA DE ACEITE 13
FILTRO ACEITE 14
ADMISION 15
ADMISION 2 17
SYSTEMA DE INDUCCION DE AIRE 19
DESCARGA 20
CARTER 23
CUBIERTA DE CARTER 1 25
ARRANQUE 27
EMBRAGUE 28
TRANSMISION 30
LEVA DE CAMBIO & HORQUILLA 32
EJE DE CAMBIO & PEDAL 33

SHASIS

CUADRO 35
GUARDABARRO 38
CUBIERTA LATERAL 39
BRAZO TRASERO 40
SUSPENSION TRASERO 42
DIRECCION 43
HORQUILLA DELANTERA 45
DEPOSITO DE COMBUSTIBLE 47
ASIENTO 50
RUEDA DELANTERA 51
CALIBRE FRENO DELANTERA 52
RUEDA TRASERA 53
CALIBRE FRENO TRASERA 55
MANILLAR & CABLE 56
CILINDRO MAESTRO DELANTERO 57
SOPORTE & APOYAPIE 59
CILINDRO MAESTRO TRASERO 62
BOVEDA 1 64
BOVEDA 2 67
GENERADOR 70
MOTOR DE ARRANQUE 71
LUZ DE DESTELLADOR 72
MEDIDOR 73
FARO DELANTERO 74
LUZ DE COLA 75
INTERRUPTOR DE MANILLAR&PALANC 76
EQUIPO ELECTRICO 1 77
EQUIPO ELECTRICO 2 79

INDICE

INDICE NUMERICO 82

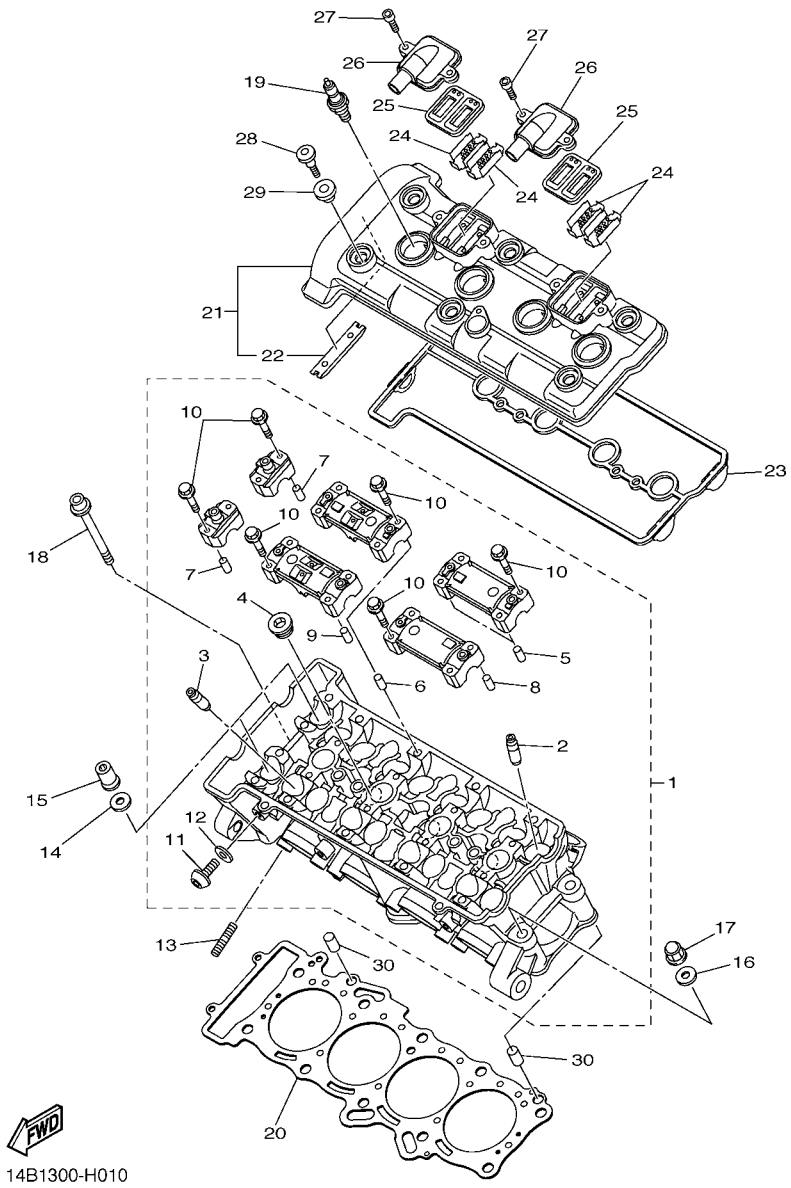

FIG. 1 CULATA DE CILINDRO

REF. Nº	CODIGO Nº	DESCRIPCION	2SG5					OBSERVACIONES
1	14B–11101–19	CULATA DE CILINDRO COMPLETA	1					
2	14B–11133–10	.GUIA DE VALVULA 1	8					
3	4C8–11134–10	.GUIA DE VALVULA 2	8					
4	90340–18002	.TORNILLO, DE DRENAJE	3					
5	91808–16023	.PASADOR DE CLAVIJA	2					
6	91808–16023	.PASADOR DE CLAVIJA	2					
7	91808–16023	.PASADOR DE CLAVIJA	4					
8	91808–16023	.PASADOR DE CLAVIJA	2					
9	91808–16023	.PASADOR DE CLAVIJA	2					
10	90105–06027	.TORNILLO	20					
11	90149–06156	.TORNILLO DE REGLAJE	1					
12	90430–06014	.JUNTA	1					
13	95612–08625	PERNO DE PUNTAL	8					
14	90201–10035	ARANDELA PLANA	8					
15	90179–10029	TUERCA	8					
16	90201–10035	ARANDELA PLANA	2					
17	90176–10075	TUERCA CORONA	2					
18	90110–06315	TORNILLO ALLEN	2					
19	94701–00424	BUJIA (NGK LMAR9E-J)	4					
20	14B–11181–00	JUNTA, DE CULATA 1	1					
21	14B–11191–00	TAPA CULATA DE CILINDRO 1	1					
22	5BE–12241–00	.TOPE DE GUIA 2	1					
23	14B–11193–00	EMPAQUE	1					
24	5VY–1482K–00	PLACA	4					
25	5SL–14890–10	VALVULA DE LENGUETA COMPLETA	2					
26	14B–14899–01	TAPA, DE CAJA	2					
27	90110–06175	TORNILLO ALLEN	4					

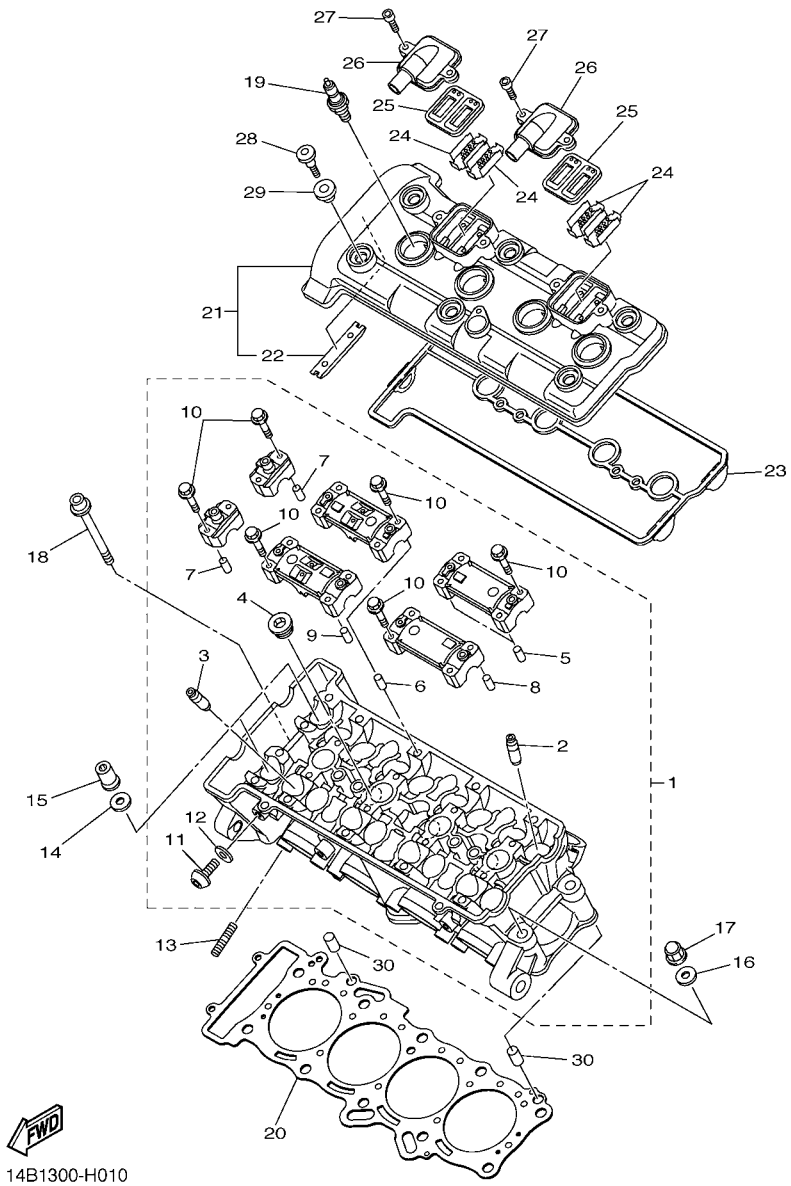

FIG. 1 CULATA DE CILINDRO

REF. Nº	CODIGO Nº	DESCRIPCION	2SG5					OBSERVACIONES
28	90109–066F0	PERNO	6					
29	5VY–1111G–00	CASQUILLO DE GOMA	6					
30	99530–10114	PASADOR, DE ESPIGA	2					

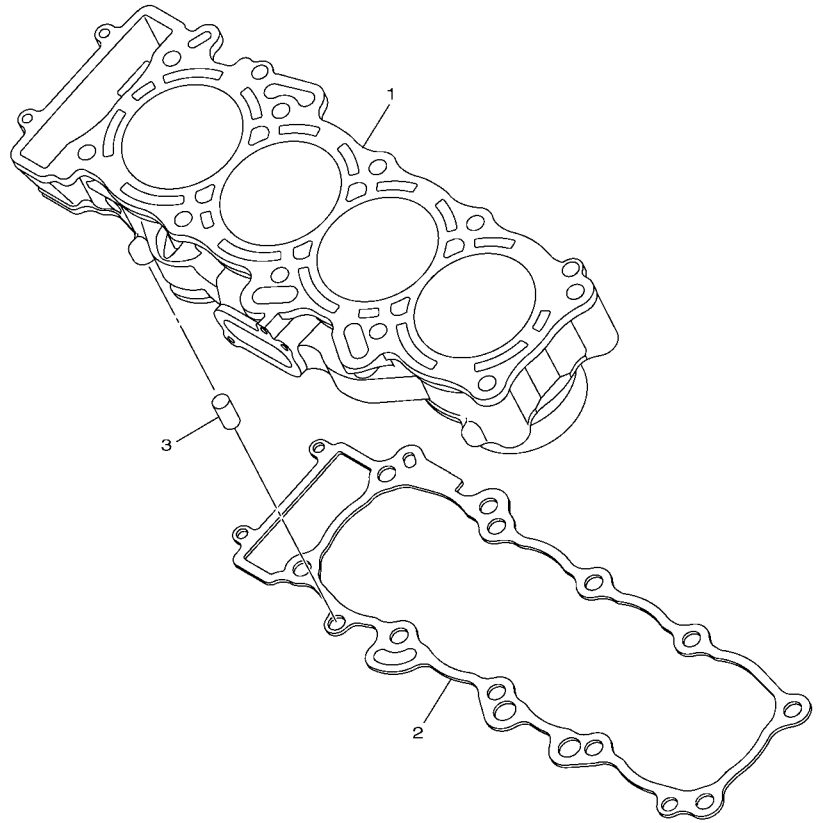

14B1300-H020

FIG. 2 CILINDRO

REF. Nº	CODIGO Nº	DESCRIPCION	2SG5					OBSERVACIONES
1	14B–11311–00	CILINDRO 1	1					
2	14B–11351–00	JUNTA, DE CILINDRO	1					
3	99530–10114	PASADOR, DE ESPIGA	2					

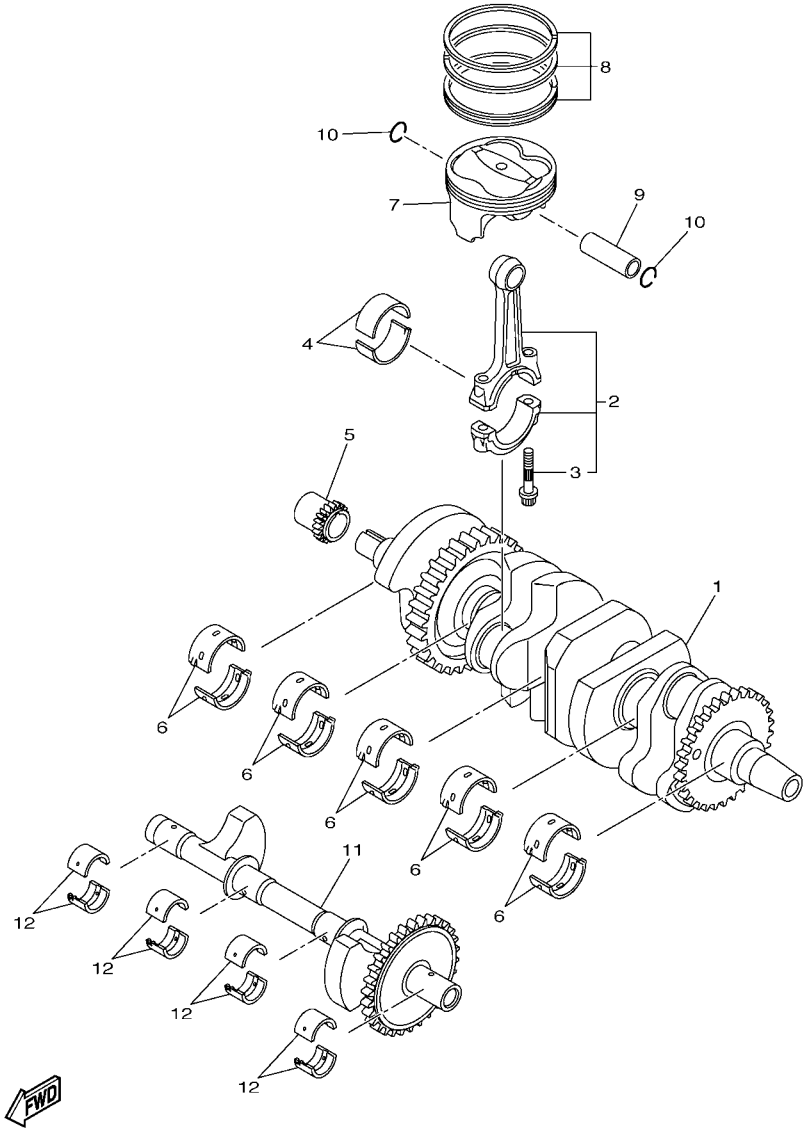

FIG. 3 CIGUENAL & PISTON

REF. Nº	CODIGO Nº	DESCRIPCION	2SG5					OBSERVACIONES
1	14B–11400–00	CIGUENAL COMPLETO	1					
2	14B–11650–00	BIELA COMPLETA	4					
3	5VY–11654–01	.TORNILLO DE BIELA	2					
4	14B–11656–00	COJINETE PLANO	8					UR ROSA-AZUL
	14B–11656–10	COJINETE PLANO	8					UR ROSA-NEGRO
	14B–11656–20	COJINETE PLANO	8					UR ROSA-MARRON
	14B–11656–30	COJINETE PLANO	8					UR ROSA-VERDE
5	14B–11549–00	CATALINA CADENA DE LEVA	1					
6	14B–11416–00	COJINETE PLANO 1	10					UR AZUL
	14B–11416–10	COJINETE PLANO 1	10					UR NEGRO
	14B–11416–20	COJINETE PLANO 1	10					UR MARRON
	14B–11416–30	COJINETE PLANO 1	10					UR VERDE
	14B–11416–40	COJINETE PLANO 1	10					UR AMARILLO
7	14B–11631–00	PISTON (NORMA)	4					
8	14B–11603–00	JUEGO DE ANILLOS (NORMA)	4					
9	4C8–11633–00	PASADOR, PISTON	4					
10	93450–18157	SEGURO	8					
11	14B–11500–00	COMPENSADOR COMPLETA	1					
12	14B–11413–00	DESLIZADOR METALICO P/PESO	8					UR AZUL
	14B–11413–10	DESLIZADOR METALICO P/PESO	8					UR NEGRO
	14B–11413–20	DESLIZADOR METALICO P/PESO	8					UR MARRON
	14B–11413–30	DESLIZADOR METALICO P/PESO	8					UR VERDE
	14B–11413–40	DESLIZADOR METALICO P/PESO	8					UR AMARILLO
	14B–11413–50	DESLIZADOR METALICO P/PESO	8					UR ROSA
	14B–11413–A0	DESLIZADOR METALICO P/PESO	8					UR BLANCO

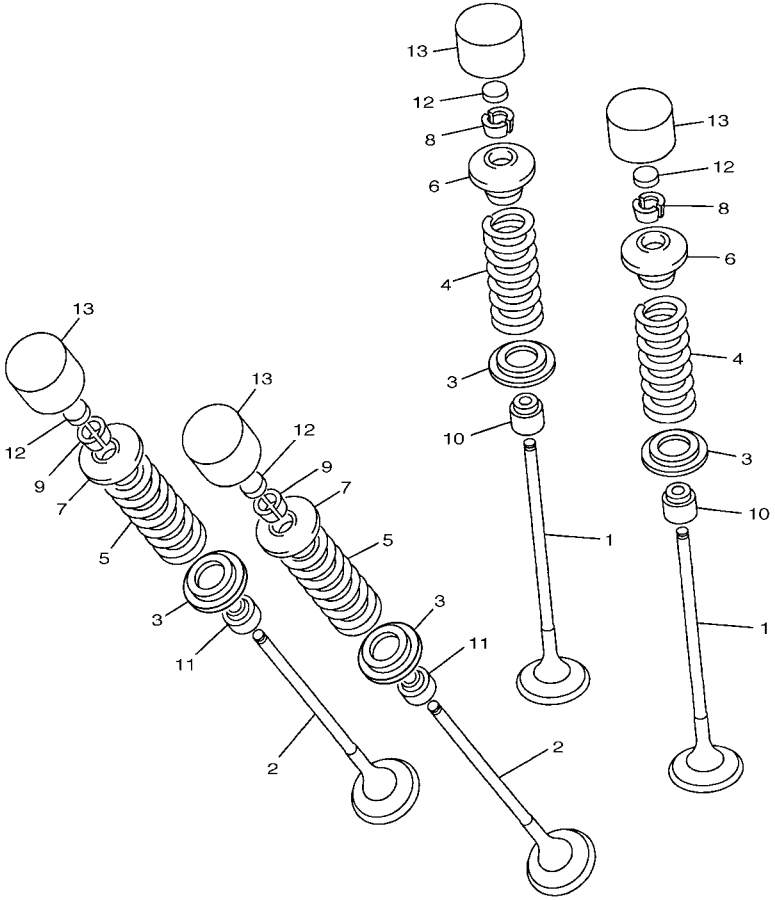

1KB8300-L040

FIG. 4 VALVULA

REF. Nº	CODIGO Nº	DESCRIPCION	2SG5					OBSERVACIONES
1	14B–12111–00	VALVULA DE ADMISION	8					
2	14B–12121–00	VALVULA DE ESCAPE	8					
3	4C8–12116–00	ASIENTO RESORTE DE VALVULA	16					
4	14B–12113–00	RESORTE VALVULA INTERNA	8					
5	14B–12114–00	RESORTE VALVULA EXTERIOR	8					
6	4C8–12117–00	RETEN RESORTE DE VALVULA	8					
7	4C8–12127–00	RETEN RESORTE DE VALVULA	8					
8	1AA–12118–00	SEGURO DE VALVULA	16					
9	1WG–12118–00	SEGURO DE VALVULA	16					
10	3P6–12129–00	SELLO DE ACEITE VALVULA	8					
11	4TE–12119–00	SELLO DE ACEITE VALVULA	8					
12	3LD–12168–K1	COJIN, AJUSTADOR (1.60)	16					UR
	3LD–12168–M1	COJIN, AJUSTADOR (1.65)	16					UR
	3LD–12168–R1	COJIN, AJUSTADOR (1.70)	16					UR
	3LD–12168–U1	COJIN, AJUSTADOR (1.75)	16					UR
	3LD–12168–W1	COJIN, AJUSTADOR (1.80)	16					UR
	3LD–12168–Y1	COJIN, AJUSTADOR (1.85)	16					UR
	3LD–12169–11	COJIN, AJUSTADOR (1.90)	16					UR
	3LD–12169–31	COJIN, AJUSTADOR (1.95)	16					UR
	3LD–12169–50	COJIN, AJUSTADOR (2.00)	16					UR
	3LD–12169–70	COJIN, AJUSTADOR (2.05)	16					UR
	3LD–12169–90	COJIN, AJUSTADOR (2.10)	16					UR
	3LD–12169–E0	COJIN, AJUSTADOR (2.15)	16					UR
	3LD–12169–G0	COJIN, AJUSTADOR (2.20)	16					UR
	3LD–12169–J0	COJIN, AJUSTADOR (2.25)	16					UR
	3LD–12169–L0	COJIN, AJUSTADOR (2.30)	16					UR
	3LD–12169–N0	COJIN, AJUSTADOR (2.35)	16					UR

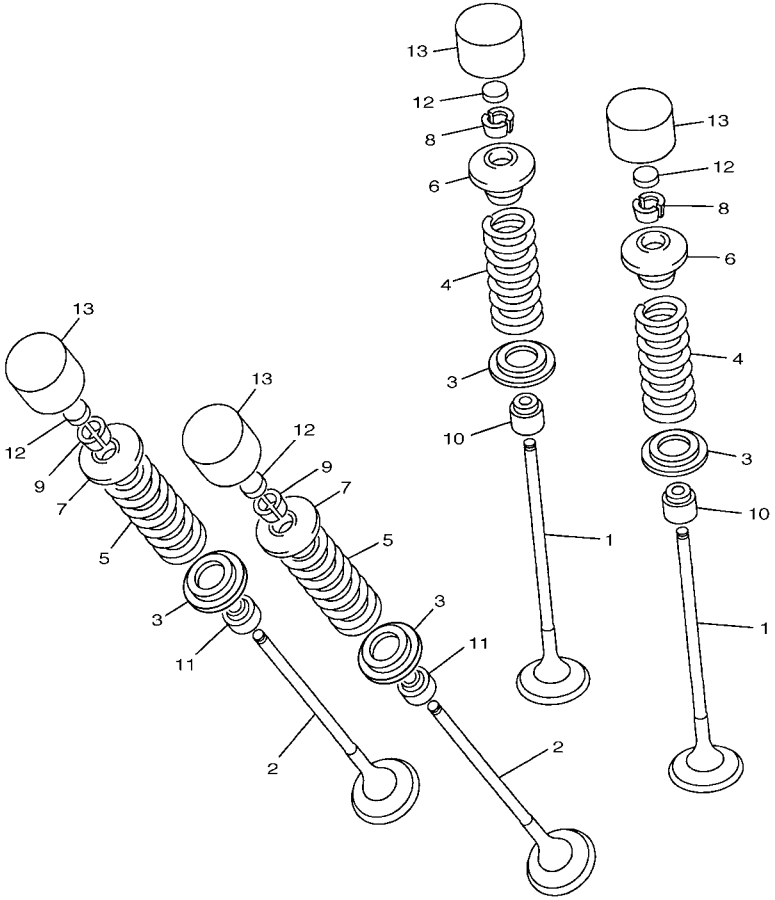

1KB8300-L040

FIG. 4 VALVULA

REF. Nº	CODIGO Nº	DESCRIPCION	2SG5					OBSERVACIONES
12	3LD–12169–T0	COJIN, AJUSTADOR (2.40)	16					UR
13	4C8–12153–10	LEVANTADOR DE VALVULA	16					AMARILLO
	4C8–12153–09	LEVANTADOR DE VALVULA (O/S)	16					AP VERDE

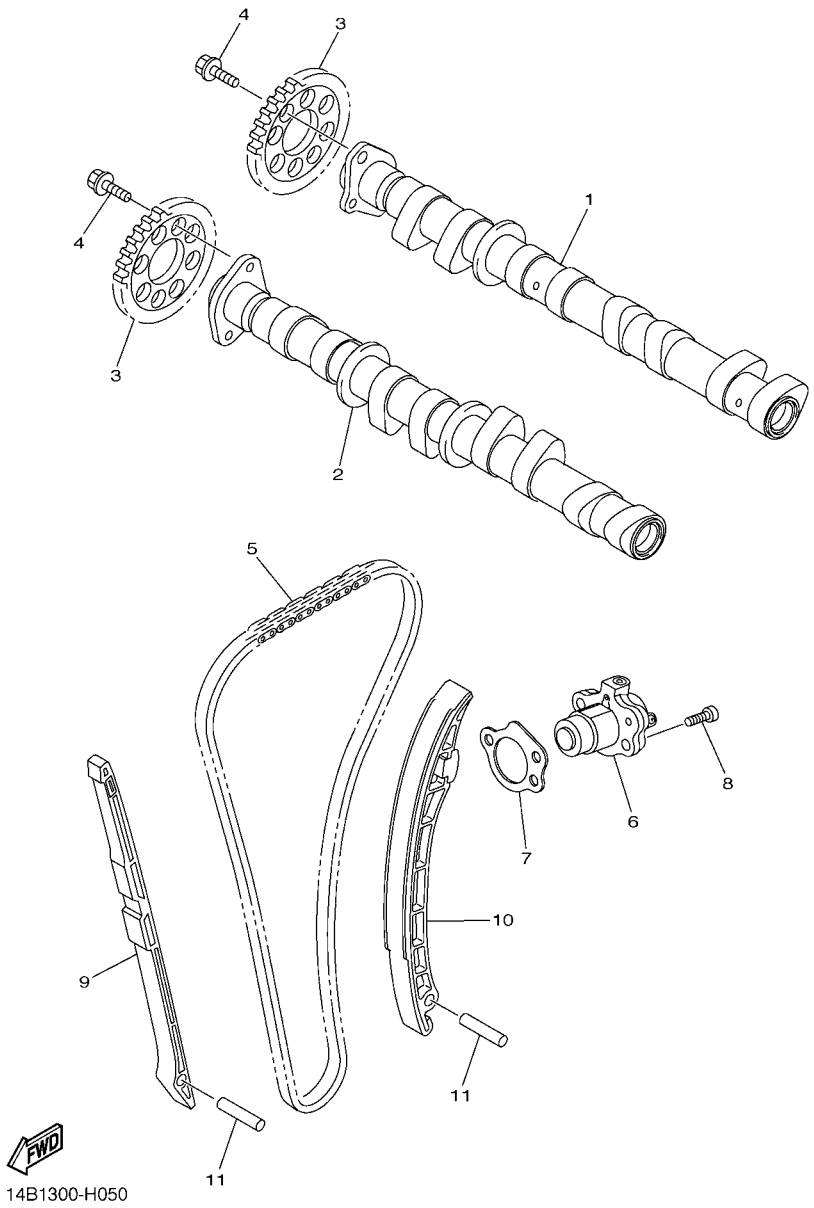

FIG. 5 ARBOL DE LEVAS & CADENA

REF. Nº	CODIGO Nº	DESCRIPCION	2SG5					OBSERVACIONES
1	14B–12170–01	ARBOL DE LEVAS COMPLETO 1	1					
2	14B–12180–01	ARBOL DE LEVAS COMPLETO 2	1					
3	14B–12176–00	CATALINA DE CADENA	2					
4	90105–07006	TORNILLO	4					
5	94591–60126	CADENA	1					
6	1KB–12210–00	TENSOR CADENA DE LEVA	1					
7	14B–12213–00	EMPAQUE DE CAJA TENSOR	1					
8	91312–06025	TORNILLO	2					
9	1KB–12251–00	AMORTIGUADOR CADENA 1	1					
10	14B–12252–00	AMORTIGUADOR CADENA 2	1					
11	93607–44002	PASADOR DE CLAVIJA	2					

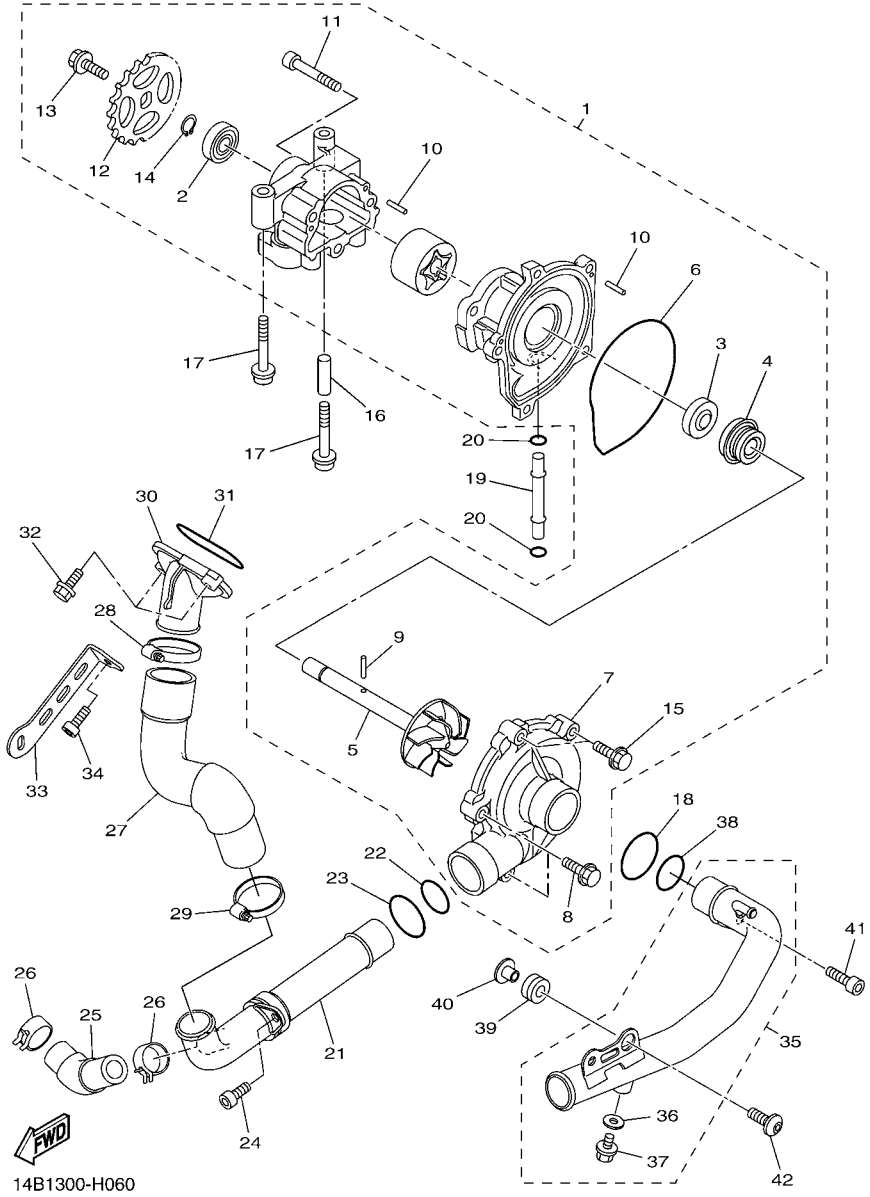

FIG. 6 BOMBA DE AGUA

REF. Nº	CODIGO Nº	DESCRIPCION	2SG5					OBSERVACIONES
1	14B–12420–01	BOMBA DE AGUA COMPLETA	1					
2	93306–00106	.COJINETE	1					
3	14B–13338–00	.SELLO	1					
4	5VK–12438–00	.SELLO MECANICO	1					
5	14B–12450–00	.EJE IMPULSOR COMPLETO	1					
6	4XV–12439–00	.ANILLO O	1					
7	14B–12422–00	.CUBIERTA DE CAJA	1					
8	95022–06025	.PERNO, DE BRIDA	3					
9	93603–17070	.PASADOR DE CLAVIJA	1					
10	93603–12007	.PASADOR DE CLAVIJA	4					
11	91312–06045	.TORNILLO	3					
12	14B–13355–00	.CATALINA IMPULSADA	1					
13	90105–06066	.TORNILLO	1					
14	99009–12400	.PRESILLA REDONDA	1					
15	95022–06020	.PERNO, DE BRIDA	2					
16	91808–30031	PASADOR DE CLAVIJA	1					
17	90110–06167	TORNILLO ALLEN	2					
18	93210–357A2	ANILLO O	1					
19	4XV–12485–00	TUBO 5	1					
20	93210–06667	ANILLO O	2					
21	14B–12481–00	TUBO 1	1					
22	93210–235A1	ANILLO O	1					
23	93210–27370	ANILLO O	1					
24	90110–06182	TORNILLO ALLEN	1					
25	14B–12588–00	MANGUERA 5	1					
26	90467–200A0	PRESILLA	2					
27	14B–12576–00	MANGUERA 1	1					

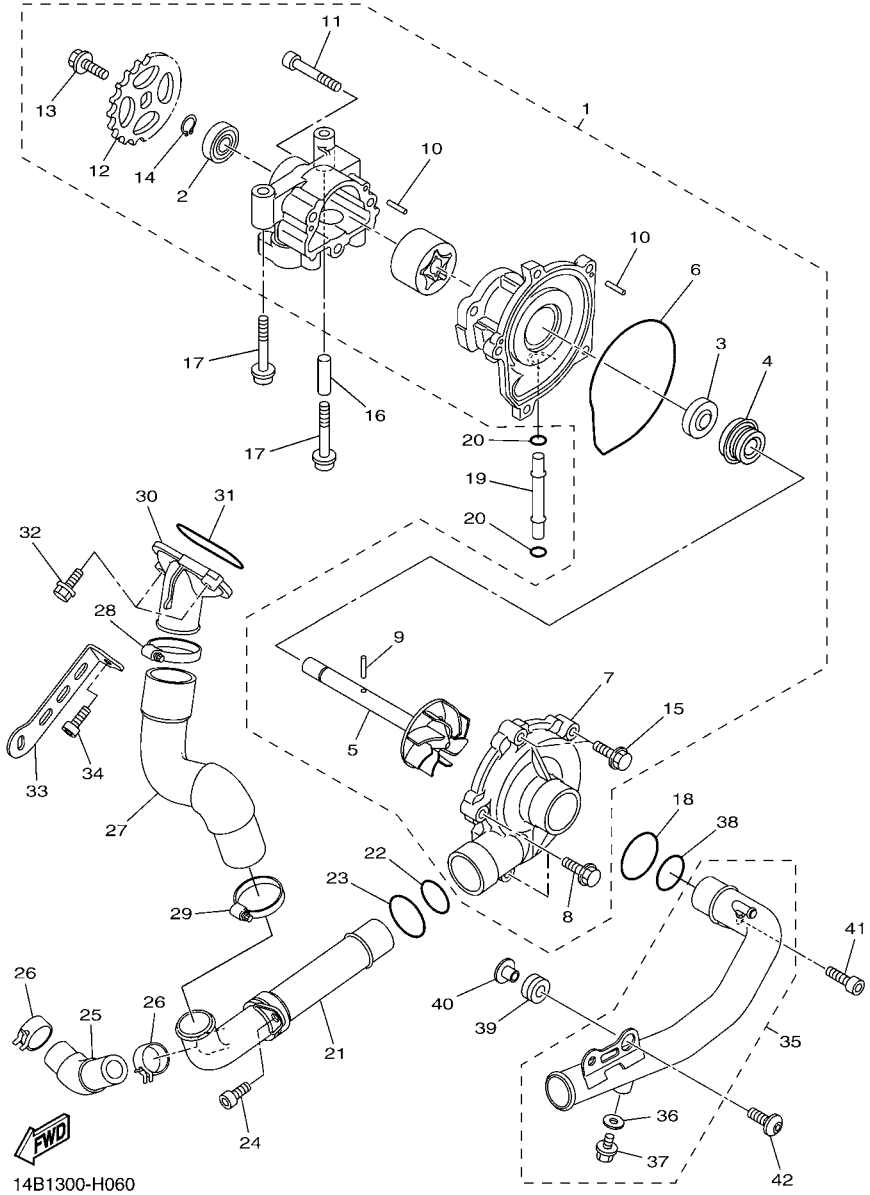

FIG. 6 BOMBA DE AGUA

REF. Nº	CODIGO Nº	DESCRIPCION	2SG5					OBSERVACIONES
28	90450–38040	BRIDA, MANGUERA	1					
29	90450–35001	BRIDA, MANGUERA	1					
30	14B–12469–10	CONDUCTO	1					
31	93210–46044	ANILLO O	1					
32	95024–06025	PERNO, BRIDA	2					
33	14B–12637–00	SOPORTE 1	1					
34	91314–06012	TORNILLO ALLEN	1					
35	14B–12484–00	TUBO 4	1					
36	90430–06014	.JUNTA	1					
37	90153–06002	.TORNILLO HEXAGONAL	1					
38	93210–235A1	ANILLO O	1					
39	90480–12010	TAPON	1					
40	90387–06112	ESPACIADOR	1					
41	90110–06182	TORNILLO ALLEN	1					
42	90149–06022	TORNILLO DE REGLAJE	1					

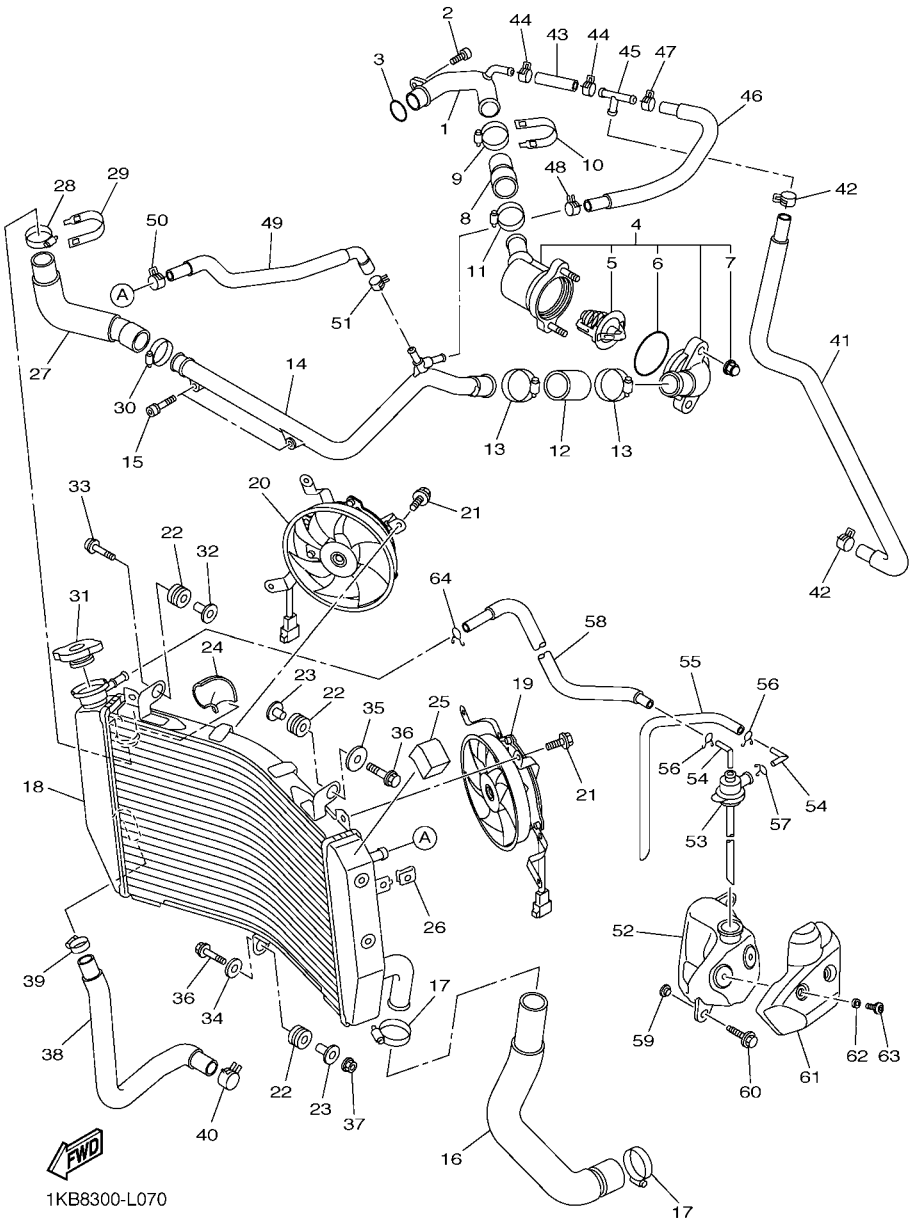

FIG. 7 RADIADOR & MANGUERA

REF. Nº	CODIGO Nº	DESCRIPCION	2SG5					OBSERVACIONES
1	14B–12485–00	TUBO 5	1					
2	90110–06182	TORNILLO ALLEN	1					
3	93210–235A1	ANILLO O	1					
4	14B–12410–00	TERMOSTATO CONJUNTO	1					
5	5LP–12411–00	.TERMOSTAT	1					
6	93210–49046	.ANILLO O	1					
7	90176–06014	.TUERCA CORONA	2					
8	4C8–12579–00	MANGUERA 4	1					
9	90450–35001	BRIDA, MANGUERA	1					
10	5GV–1246E–00	CUBIERTA 2	1					
11	90450–38040	BRIDA, MANGUERA	1					
12	14B–12579–00	MANGUERA 4	1					
13	90450–38040	BRIDA, MANGUERA	2					
14	14B–12482–00	TUBO 2	1					
15	90110–06256	TORNILLO ALLEN	2					
16	14B–12578–00	MANGUERA 3	1					
17	90450–35001	BRIDA, MANGUERA	2					
18	14B–12461–00	RADIADOR COMPLETO	1					
19	1KB–12405–00	COMPRESOR	1					
20	1KB–12405–10	COMPRESOR	1					
21	5GJ–12675–00	PERNO, SUJECION VENTILADOR	6					
22	90480–15363	TAPON	3					
23	90387–0614M	ESPACIADOR	2					
24	14B–12465–00	AMORTIGUADOR DE RADIADOR	1					
25	13S–12688–00	AMORTIGUADOR DE CUBIERTA 7	1					
26	5SL–12671–00	TUERCA 1	1					
27	14B–12551–00	55 PLACA	1					

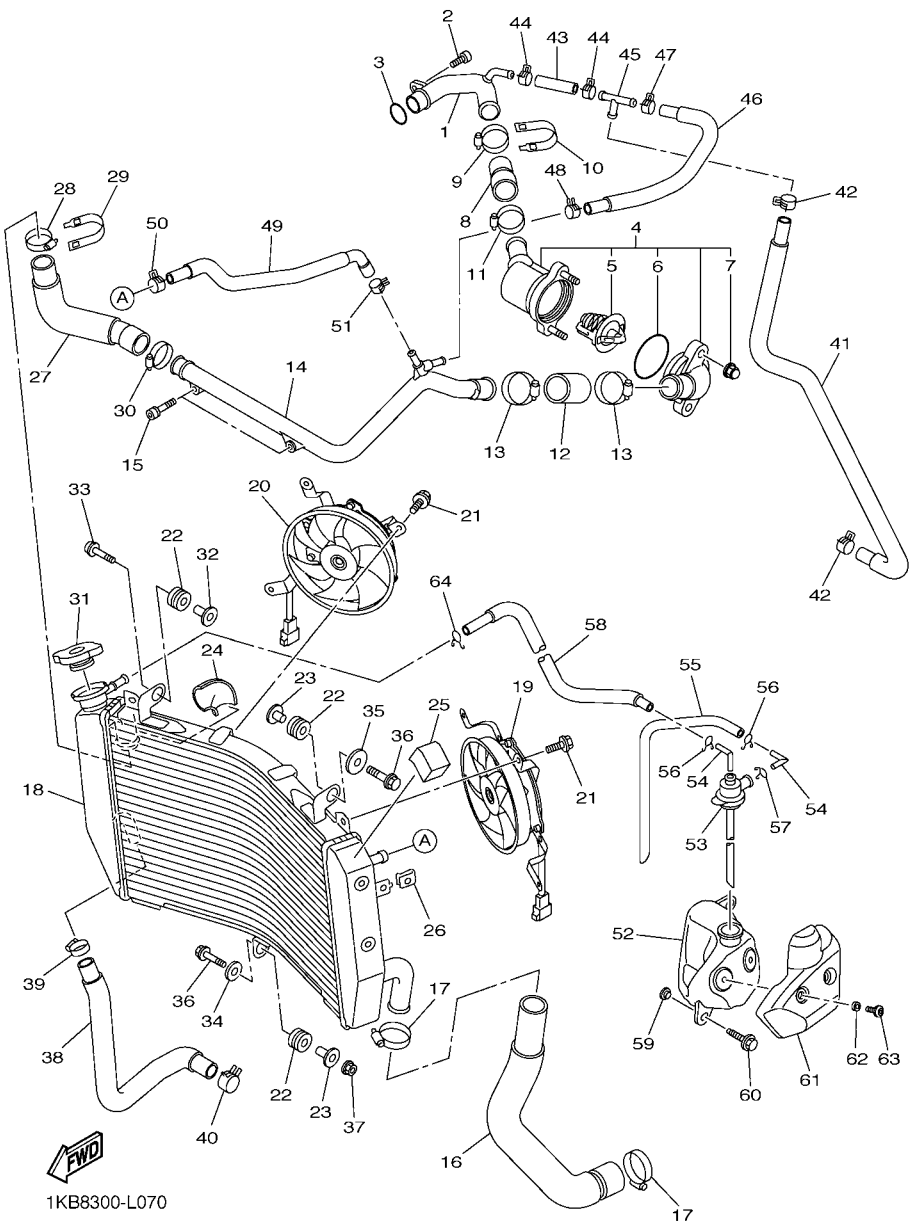

FIG. 7 RADIADOR & MANGUERA

REF. Nº	CODIGO Nº	DESCRIPCION	2SG5					OBSERVACIONES
28	90450–35001	BRIDA, MANGUERA	1					
29	5GV–1246E–00	CUBIERTA 2	1					
30	90450–38040	BRIDA, MANGUERA	1					
31	5SL–12462–00	TAPON, DEL RADIADOR	1					
32	90387–0614M	ESPACIADOR	1					
33	91317–06030	PERNO	1					
34	90201–06071	ARANDELA PLANA	1					
35	90201–06074	ARANDELA PLANA	1					
36	95827–06030	TORNILLO	2					
37	95607–06200	TUERCA DE AUTO-CIERRE	1					
38	14B–12589–00	MANGUERA 6	1					
39	90450–22017	BRIDA, MANGUERA	1					
40	90467–200A0	PRESILLA	1					
41	14B–1243A–00	TUBO 1	1					
42	90467–11090	PRESILLA	2					
43	14B–1243E–00	TUBO 2	1					
44	90467–11090	PRESILLA	2					
45	90413–07023	UNION	1					
46	14B–1244G–00	MANGUERA 4	1					
47	90467–11090	PRESILLA	1					
48	90467–11044	PRESILLA	1					
49	14B–12552–00	MANGUERA 8	1					
50	90467–11090	PRESILLA	1					
51	90467–11044	PRESILLA	1					
52	14B–21871–00	TANQUE DE RECUPERACION	1					
53	14B–21875–00	TAPA	1					
54	26H–21828–00	CODO	2					

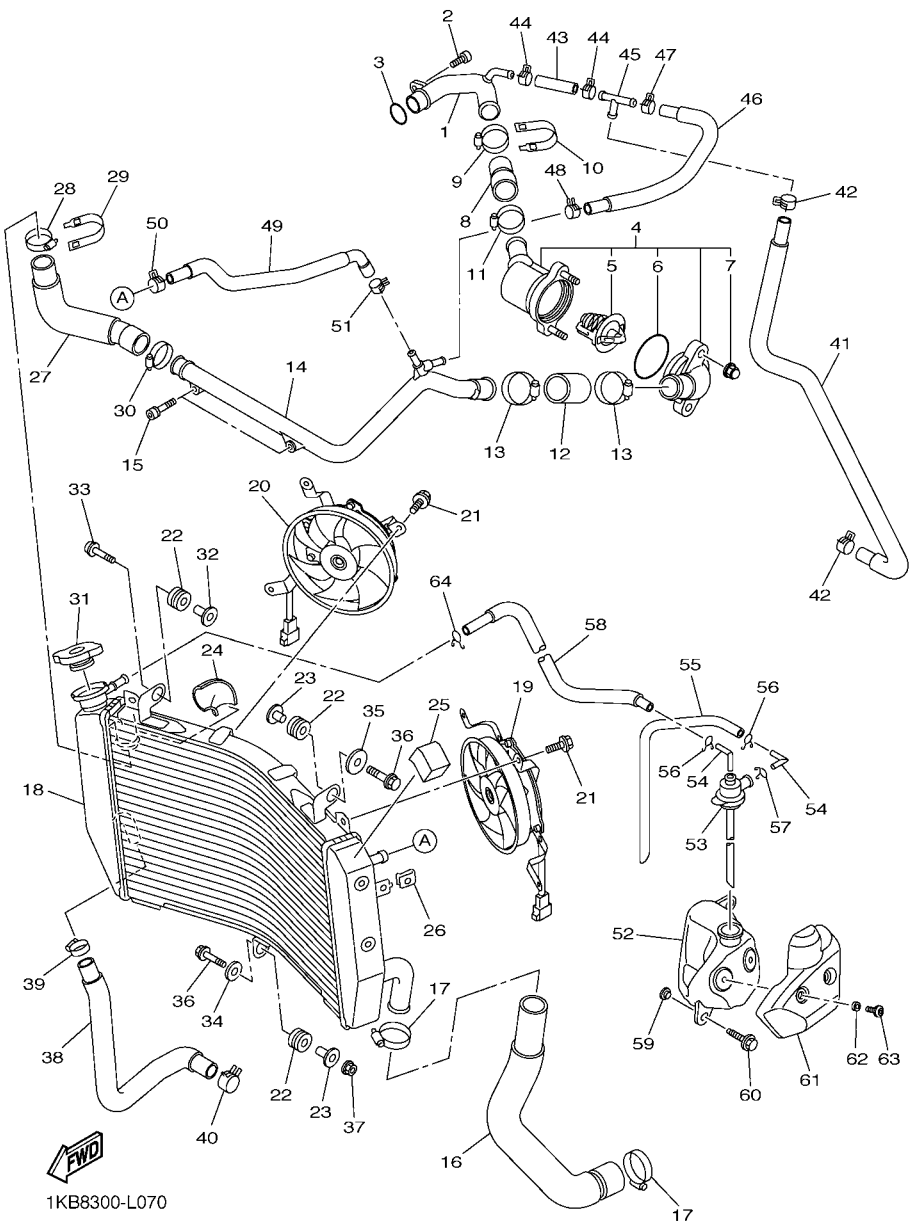

FIG. 7 RADIADOR & MANGUERA

REF. Nº	CODIGO Nº	DESCRIPCION	2SG5					OBSERVACIONES
55	90445–08036	TUBO	1					
56	90467–08003	PRESILLA	2					
57	90467–10M04	PRESILLA	1					
58	14B–1243F–00	MANGUERA 3	1					
59	90387–06681	ESPACIADOR	2					
60	90119–06177	TORNILLO CON ARANDELA	2					
61	14B–2172W–00	CUBIERTA	1					
62	90387–06372	ESPACIADOR	2					
63	90111–06119	TORNILLO	2					
64	90467–08075	PRESILLA	1					

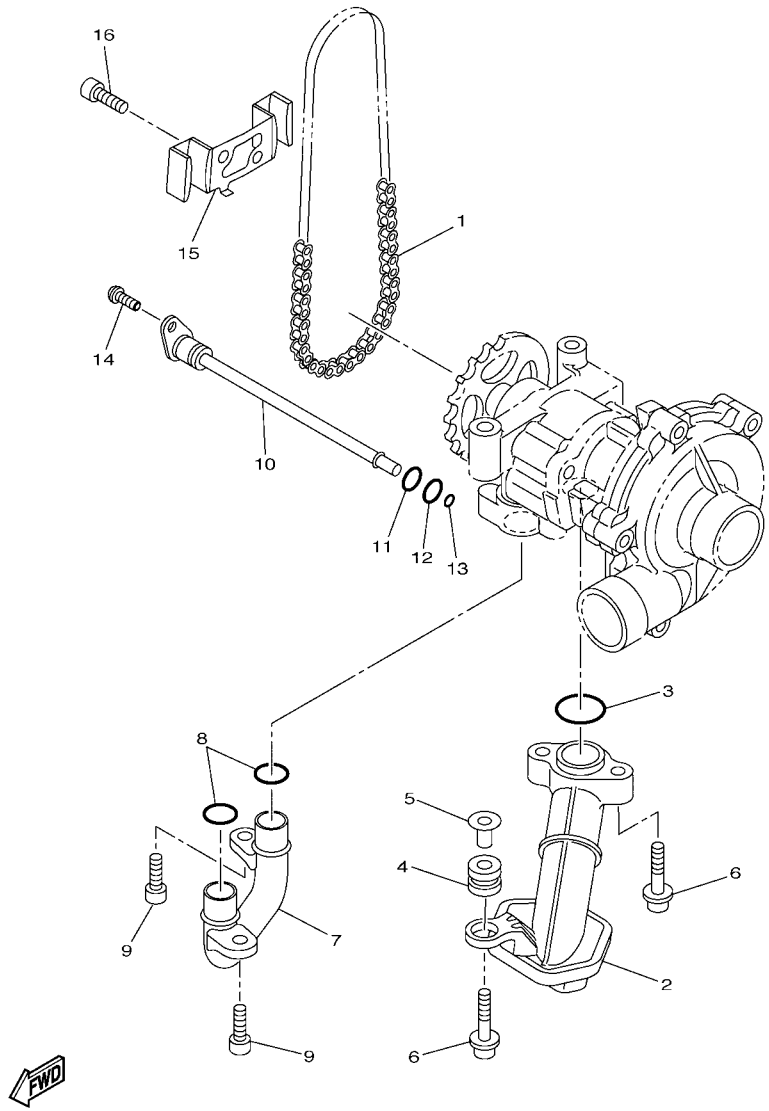

FIG. 8 BOMBA DE ACEITE

REF. Nº	CODIGO Nº	DESCRIPCION	2SG5					OBSERVACIONES
1	94580–31082	CADENA (DID25HT 82LE)	1					
2	14B–13410–00	CAJA DE FILTRO COMPLETA	1					
3	93210–22M93	ANILLO O	1					
4	90480–13010	TAPON	1					
5	5VY–13117–10	COLLAR, DISTANCIA	1					
6	90110–06173	TORNILLO ALLEN	3					
7	14B–13416–00	TUBO DE ACEITE 1	1					
8	93210–14003	ANILLO O	2					
9	90110–06182	TORNILLO ALLEN	2					
10	14B–1316E–00	TUBO, DE ENTREGA 5	1					
11	93210–12010	ANILLO O	1					
12	93210–09525	ANILLO O	1					
13	93210–06667	ANILLO O	1					
14	90149–06158	TORNILLO DE REGLAJE	1					
15	14B–13898–00	SOSTEN	1					
16	90110–06182	TORNILLO ALLEN	2					

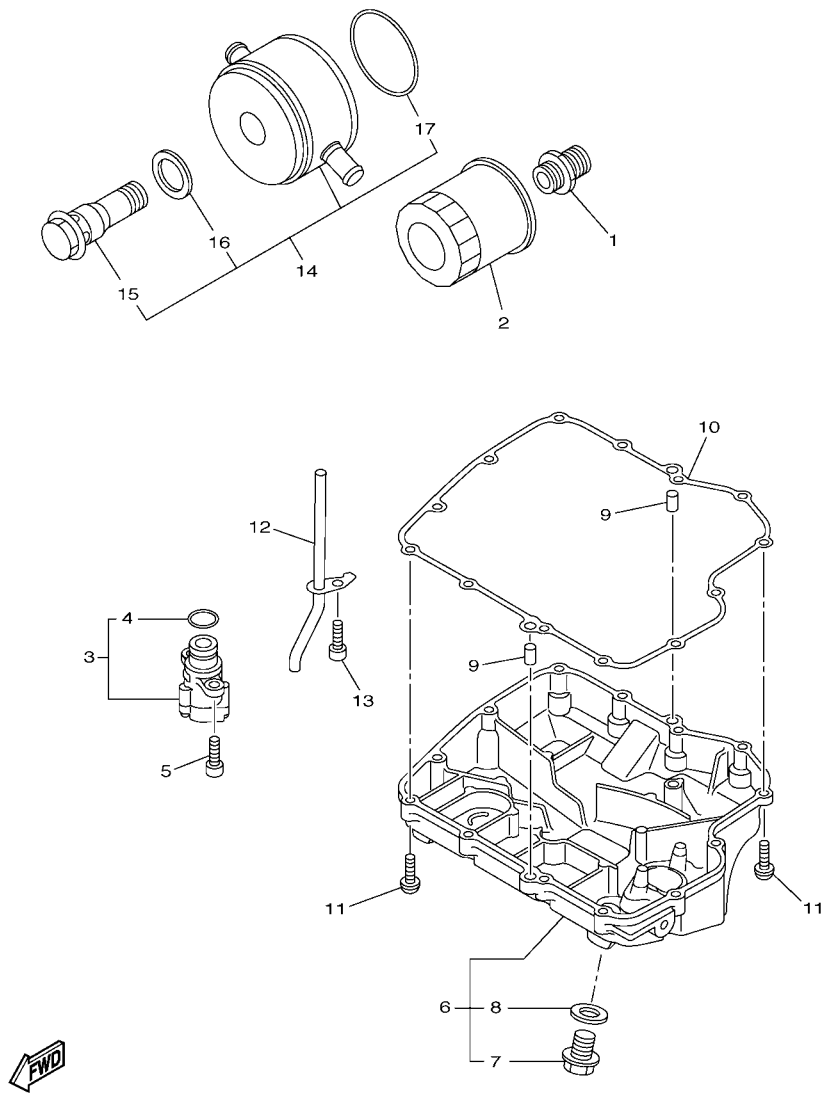

FIG. 9 FILTRO ACEITE

REF. Nº	CODIGO Nº	DESCRIPCION	2SG5					OBSERVACIONES
1	90401–20008	PERNO DE UNION	1					
2	5GH–13440–50	ELEMENTO FILTRO DE ACEITE	1					
3	14B–13490–00	VALVELA DE DESCOMPRESION	1					
4	93210–15566	.ANILLO O	1					
5	90110–06169	TORNILLO ALLEN	2					
6	1KB–13400–00	CUBIERTA DE FILTRO COMPLETO	1					
7	90340–14132	.TORNILLO, DE DRENAJE	1					
8	214–11198–01	.EMPAQUE	1					
9	99530–08012	PASADOR, DE ESPIGA	2					
10	14B–13414–00	EMPAQUE DE TAPA FILTRO	1					
11	90149–06079	TORNILLO DE REGLAJE	13					
12	14B–13161–00	TUBO CONDUCTOR 1	1					
13	90110–06182	TORNILLO ALLEN	1					
14	14B–13470–00	ENFRIADOR DE ACEITE COMPLETO	1					
15	5FL–12822–00	.PERNO DE UNION	1					
16	5EB–13475–00	.EMPAQUE	1					
17	14B–13473–00	.ANILLO O	1					

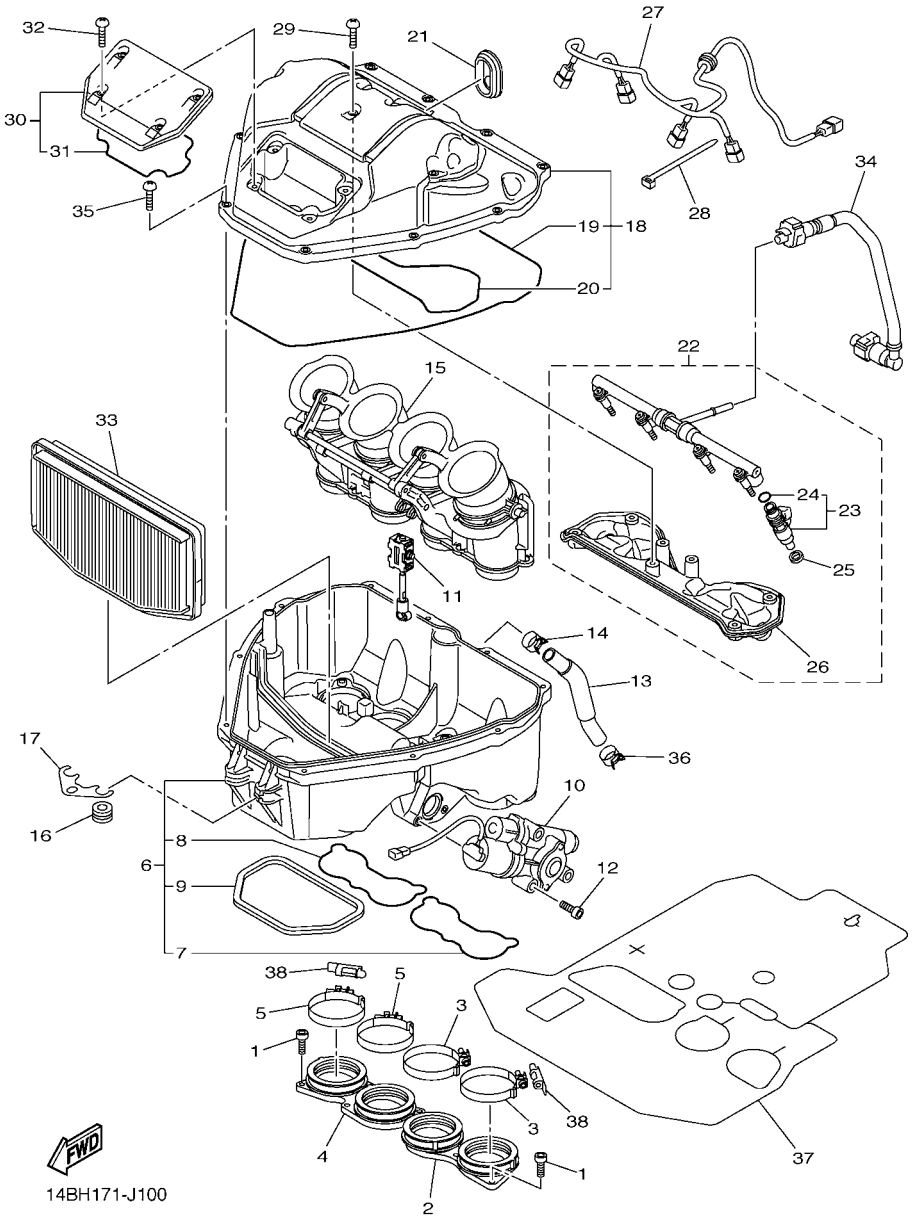

FIG. 10 ADMISION

REF. Nº	CODIGO Nº	DESCRIPCION	2SG5					OBSERVACIONES
1	90110–06193	TORNILLO ALLEN	7					
2	14B–13595–00	TOBERA	1					
3	90450–60004	BRIDA, MANGUERA	2					
4	14B–13596–00	TOBERA DE CARBURADOR 2	1					
5	90450–60004	BRIDA, MANGUERA	2					
6	14B–14411–01	CAJA FILTRO DEL AIRE 1	1					
7	14B–14457–00	.SELLO	1					
8	14B–14462–00	.SELLO	1					
9	14B–14425–00	.AMORTIGUADOR 1	1					
10	14B–85870–00	MOTOR ENGRANADO 2	1					
11	14B–14490–00	EJE CONJUNTO	1					
12	90110–05047	TORNILLO ALLEN	3					
13	14B–15393–00	TUBO, RESPIRADERO2	1					
14	90467–160A2	PRESILLA	1					
15	14B–1440B–00	UNION COMPLETO	1					
16	14B–14445–00	TAPON PROTECTOR	2					
17	14B–14498–00	SOPORTE 1	1					
18	14B–14421–01	CAJA FILTRO DEL AIRE 2	1					
19	14B–14452–00	.SELLO	1					
20	14B–1446R–00	.SELLO	1					
21	13S–14445–00	TAPON PROTECTOR	1					
22	14B–14402–01	TAPA COMPLETO FILTRO DE AIRE	1					
23	14B–13761–10	.INYECTOR	4					
24	5PS–14147–00	..ANILLO O	1					
25	8FP–13556–00	.ANILLO PROTECTOR	4					
26	14B–13767–01	.TAPA DE INJECTOR	1					
27	14B–82318–00	CABLE SUBCONDUCTOR	1					

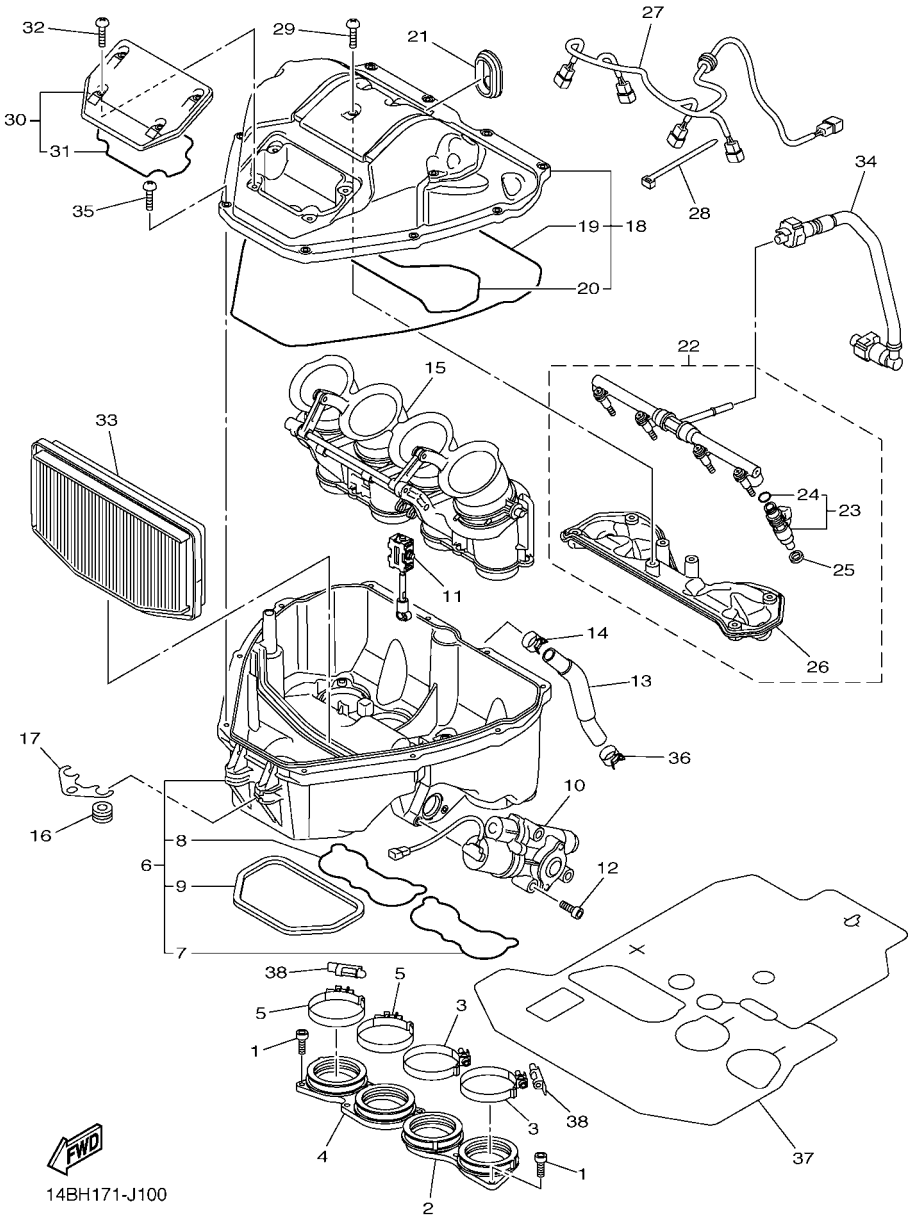

FIG. 10 ADMISION

REF. Nº	CODIGO Nº	DESCRIPCION	2SG5					OBSERVACIONES
28	90464–16061	BRIDA	1					
29	92012–05014	PERNO	7					
30	14B–14412–01	TAPA CAJA DEL FILTRO 1	1					
31	14B–14467–00	.SELLO	1					
32	98902–05014	TORNILLO DE LIGAR	4					
33	14B–14451–00	ELEMENTO DEL FILTRO DEL AIRE	1					
34	14B–13972–00	TUBO, COMBUSTIBLE 2	1					
35	98902–05020	TORNILLO DE LIGAR	10					
36	90467–160A2	PRESILLA	1					
37	14B–12682–01	PROTECTOR	1					
38	2C0–13881–00	CUBIERTA 1	2					

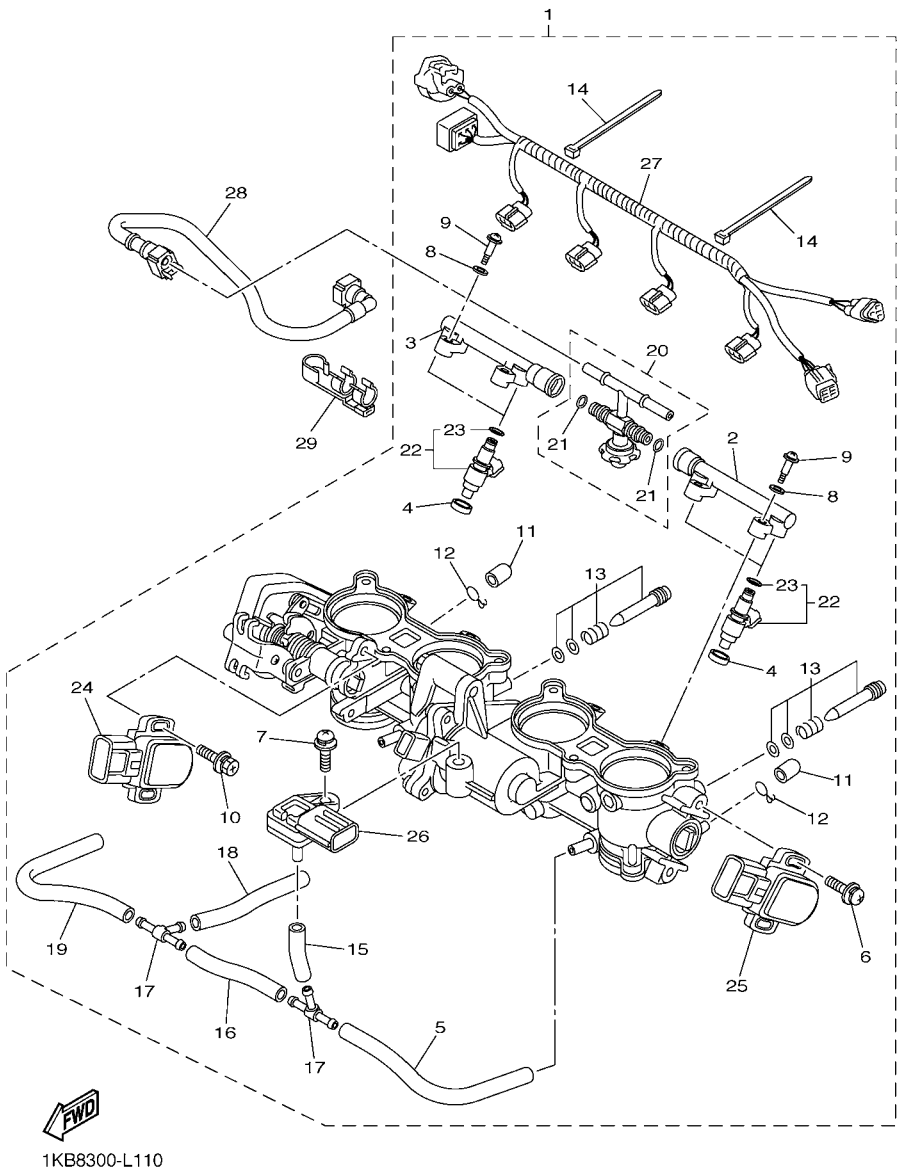

1KB8300-L110

FIG. 11 ADMISION 2

REF. Nº	CODIGO Nº	DESCRIPCION	2SG5					OBSERVACIONES
1	1KB–13750–00	CAJA DE ACELERADOR COMPL.	1					
2	14B–1393A–00	.TUBO	1					
3	14B–1393B–00	.TUBO 2	1					
4	8FP–13556–00	.ANILLO PROTECTOR	4					
5	5PW–14396–00	.TUBO	1					
6	8CC–14216–10	.TORNILLO	2					
7	2C0–14216–00	.TORNILLO	1					
8	363–14198–00	.EMPAQUE	4					
9	14B–13573–00	.PERNO 1	4					
10	5FL–14216–00	.TORNILLO	2					
11	895–14169–00	.FUNDA	4					
12	8A7–14139–00	.PRESILLA TUBO	4					
13	2C0–14105–00	.TORNILLO DE PILOTO	4					
14	4KM–14137–00	.PRESILLA	2					
15	5FL–14348–10	.MANGUERA	1					
16	5JW–24311–00	.TUBO DE COMBUSTIBLE 1	1					
17	68V–24376–00	.TUBO DE UNION 1	2					
18	5JW–14348–00	.MANGUERA	1					
19	5PW–14349–00	.TUBO	1					
20	14B–13795–00	.TOBERA UNION	1					
21	39P–14147–00	..ANILLO O	2					
22	5S7–13761–00	.INYECTOR	4					
23	5PS–14147–00	..ANILLO O	1					
24	13S–85884–00	.TERMICA SENSORIO	1					
25	13S–85885–00	.TERMICA SENSORIO	1					
26	2C0–82380–00	.SENSOR DE PRESION	1					
27	1KB–82386–00	.EXTENSION, ARNES DE CABLES	1					

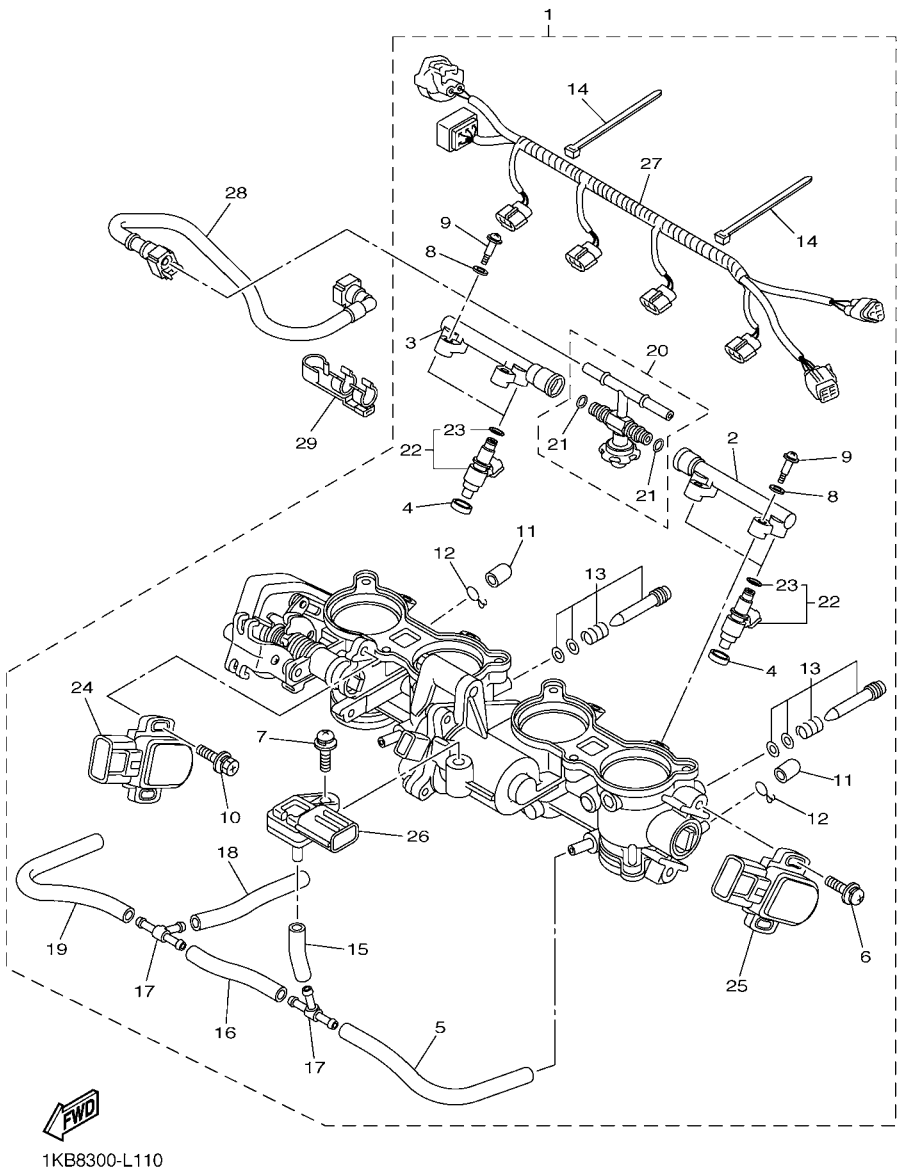

FIG. 11 ADMISION 2

REF. Nº	CODIGO Nº	DESCRIPCION	2SG5					OBSERVACIONES
28	14B–13971–00	ANILLO DE ESPACIADOR	1					
29	90464–16005	BRIDA	1					

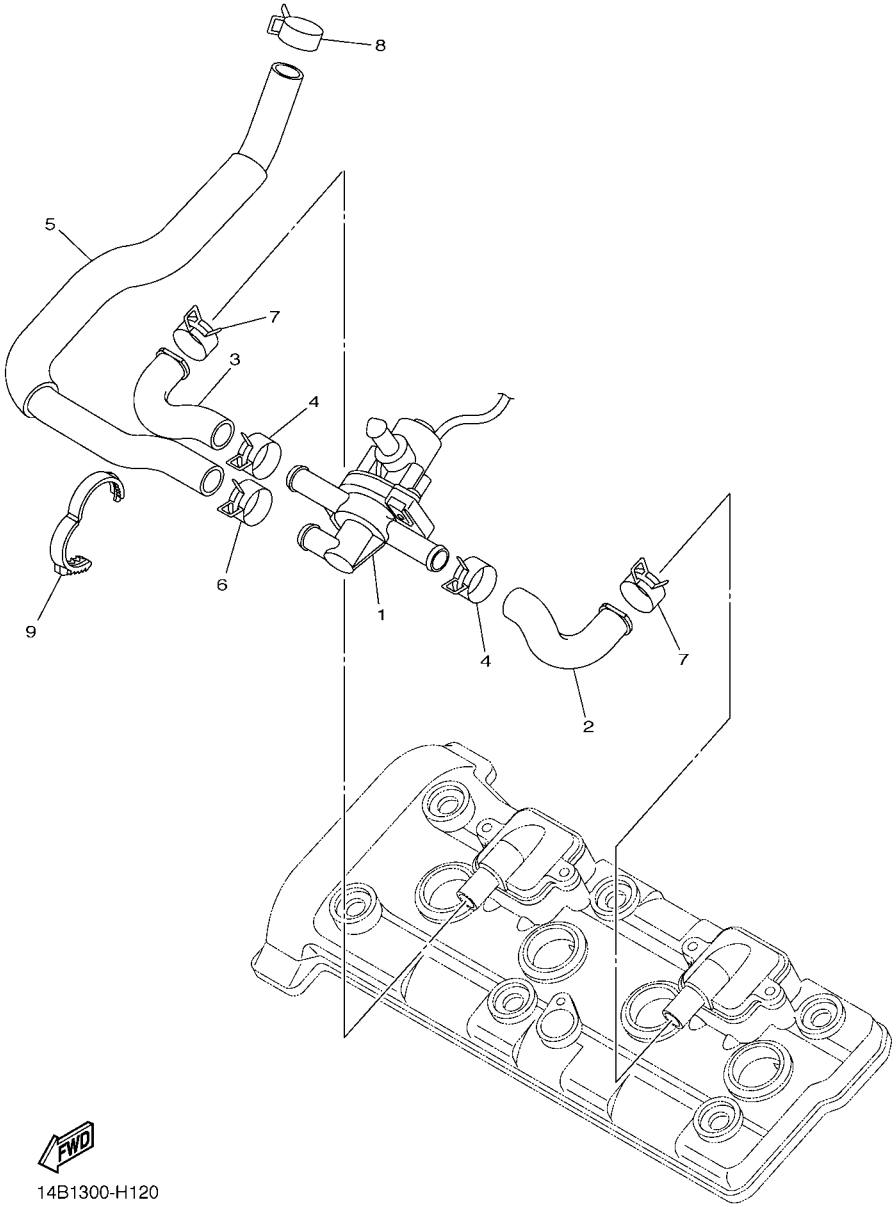

FIG. 12 SYSTEMA DE INDUCCION DE AIRE

REF. Nº	CODIGO Nº	DESCRIPCION	2SG5					OBSERVACIONES
1	2D1–14840–00	VALVULA, CORTE DE AIRE	1					
2	4C8–14881–01	TUBO 1	1					
3	4C8–14882–01	TUBO 2	1					
4	90467–18172	PRESILLA	2					
5	14B–14883–00	TUBO 3	1					
6	90467–18172	PRESILLA	1					
7	90467–180A0	PRESILLA	2					
8	90467–17003	PRESILLA	1					
9	90464–28003	BRIDA	1					

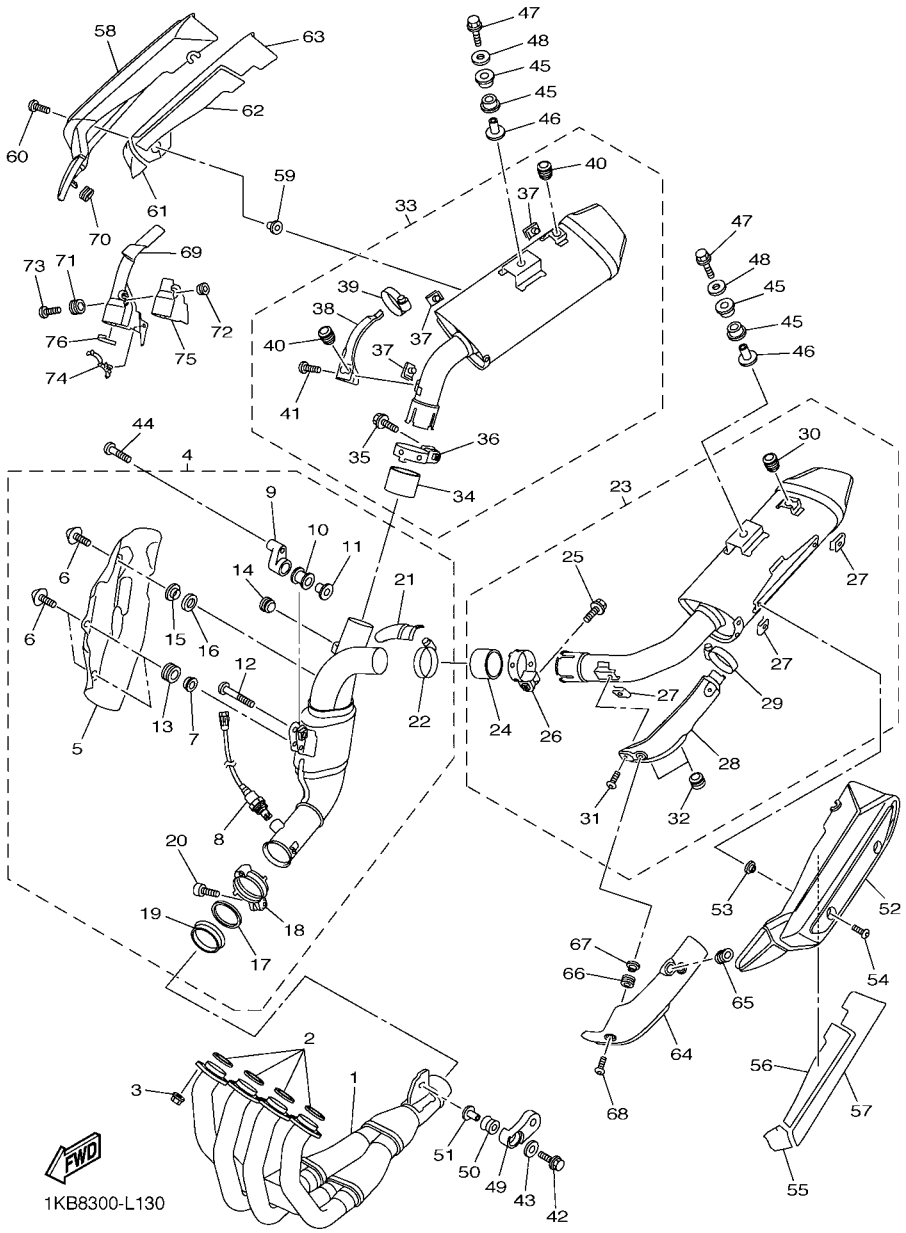

FIG. 13 DESCARGA

REF. Nº	CODIGO Nº	DESCRIPCION	2SG5					OBSERVACIONES
1	14B–14602–00	TUBO DE ESPAPE COMPLETO	1					
2	4FM–14613–00	JUNTA, TUBO DE ESCAPE	4					
3	90179–08410	TUERCA	8					
4	14B–14740–10	ASAMBLEA DEL CATALIZADOR	1					
5	14B–14738–00	.PROTECTOR DE SILENCIADOR 3	1					
6	90110–06200	.TORNILLO ALLEN	3					
7	90387–06112	.ESPACIADOR	2					
8	14B–8592A–00	.SENSOR	1					
9	14B–21445–00	.SOPORTE DE SILENCIADOR 1	1					
10	4XV–27424–00	.AMORTIGUADOR DE SILENCIADOR	1					
11	90387–08005	.ESPACIADOR	1					
12	92014–08035	.PERNO	1					
13	90480–12579	.TAPON	2					
14	2D1–14737–00	.AMORTIGUADOR DE SILENCIADOR	1					
15	90387–06217	.ESPACIADOR	1					
16	90201–08080	.ARANDELA PLANA	1					
17	14B–14623–00	.EMPAQUE	1					
18	14B–14725–00	.BANDA DE SILENCIADOR	1					
19	14B–14618–00	.ANILLO DE TOPE	1					
20	90110–06343	.TORNILLO ALLEN	1					
21	14B–1465U–00	.PLACA, DE PROTECTOR 3	1					
22	90450–45001	.BRIDA, MANGUERA	1					
23	14B–14710–30	TUBO DE ESCAPE COMPLETO 1	1					
24	5VY–14714–00	.EMPAQUE DE SILENCIADOR	1					
25	95814–08035	.TORNILLO	1					
26	3D8–14715–00	.BANDA DE SILENCIADOR	1					
27	90183–060A2	.TUERCA DE RESORTE	3					

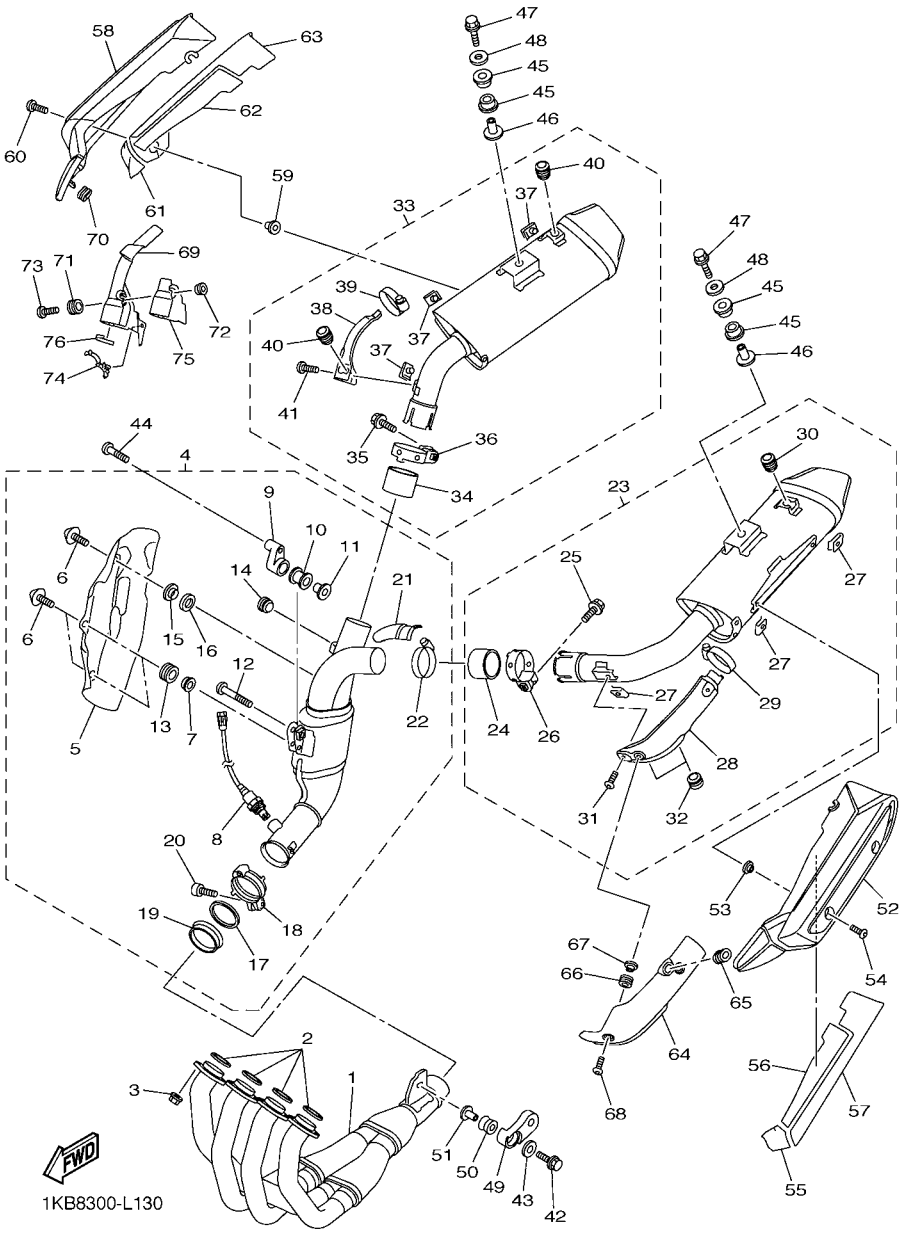

FIG. 13 DESCARGA

REF. Nº	CODIGO Nº	DESCRIPCION	2SG5					OBSERVACIONES
28	14B–1465R–00	.PLACA DE PROTECTOR 1	1					
29	90450–45001	.BRIDA, MANGUERA	1					
30	3D7–14737–00	.AMORTIGUADOR DE SILENCIADOR	1					
31	92012–06010	.PERNO	1					
32	4FM–24181–00	.AMORTIGUADOR DE MONTAJE 1	2					
33	14B–14720–30	TUBO DE ESCAPE COMPLETO 2	1					
34	5VY–14714–00	.EMPAQUE DE SILENCIADOR	1					
35	95814–08035	.TORNILLO	1					
36	3D8–14715–00	.BANDA DE SILENCIADOR	1					
37	90183–060A2	.TUERCA DE RESORTE	3					
38	14B–1465T–00	.PLACA, DE PROTECTOR 2	1					
39	90450–45001	.BRIDA, MANGUERA	1					
40	3D7–14737–00	.AMORTIGUADOR DE SILENCIADOR	2					
41	92012–06010	.PERNO	1					
42	95812–08040	TORNILLO DE REBORDE	1					
43	90201–087G2	ARANDELA PLANA	1					
44	90111–08071	TORNILLO	1					
45	14B–27424–00	AMORTIGUADOR DE APOYAPIE 2	4					
46	90387–08039	ESPACIADOR	2					
47	95812–08045	TORNILLO DE REBORDE	2					
48	90201–08082	ARANDELA PLANA	2					
49	14B–21446–00	SOPORTE DE SILENCIADOR 2	1					
50	5VY–14747–00	AMORTIGUADOR DE SILENCIADOR	1					
51	90387–08021	ESPACIADOR	1					
52	1KB–14718–00	PROTECTOR DE SILENCIADOR 1	1					
53	90387–06170	ESPACIADOR	2					
54	90111–06127	TORNILLO	2					

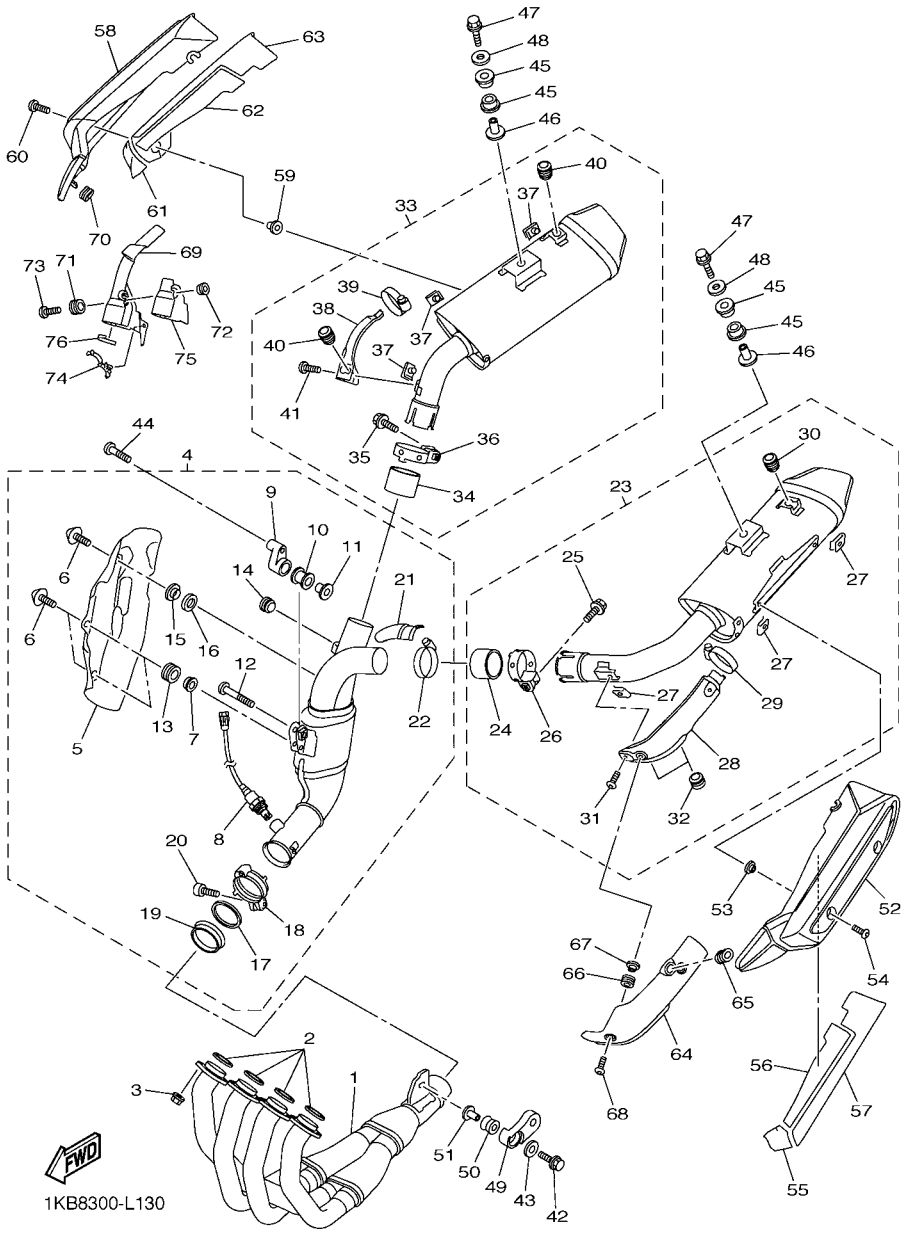

FIG. 13 DESCARGA

REF. Nº	CODIGO Nº	DESCRIPCION	2SG5					OBSERVACIONES
55	1KB–27498–00	ASIENTO 1	1					
56	1KB–27499–00	ASIENTO 2	1					
57	1KB–2749A–00	ASIENTO 3	1					
58	1KB–14728–00	PROTECTOR DE SILENCIADOR	1					
59	90387–06170	ESPACIADOR	2					
60	90111–06127	TORNILLO	2					
61	1KB–2749B–00	ASIENTO4	1					
62	1KB–2749C–00	ASIENTO 5	1					
63	1KB–2749D–00	ASIENTO 6	1					
64	14B–2163E–00	CUBIERTA TRAS GUARDABARRO 2	1					
65	90480–01558	TAPON	1					
66	90480–12581	TAPON	2					
67	90387–087L0	ESPACIADOR	2					
68	90111–06095	TORNILLO	2					
69	14B–2163F–00	CUBIERTA TRAS GUARDABARRO 3	1					
70	90480–01558	TAPON	1					
71	90480–12581	TAPON	2					
72	90387–087L0	ESPACIADOR	2					
73	90111–06095	TORNILLO	2					
74	90464–16006	BRIDA	1					
75	14B–1478P–00	ASIENTO	1					
76	14B–1479P–00	ASIENTO 5	1					

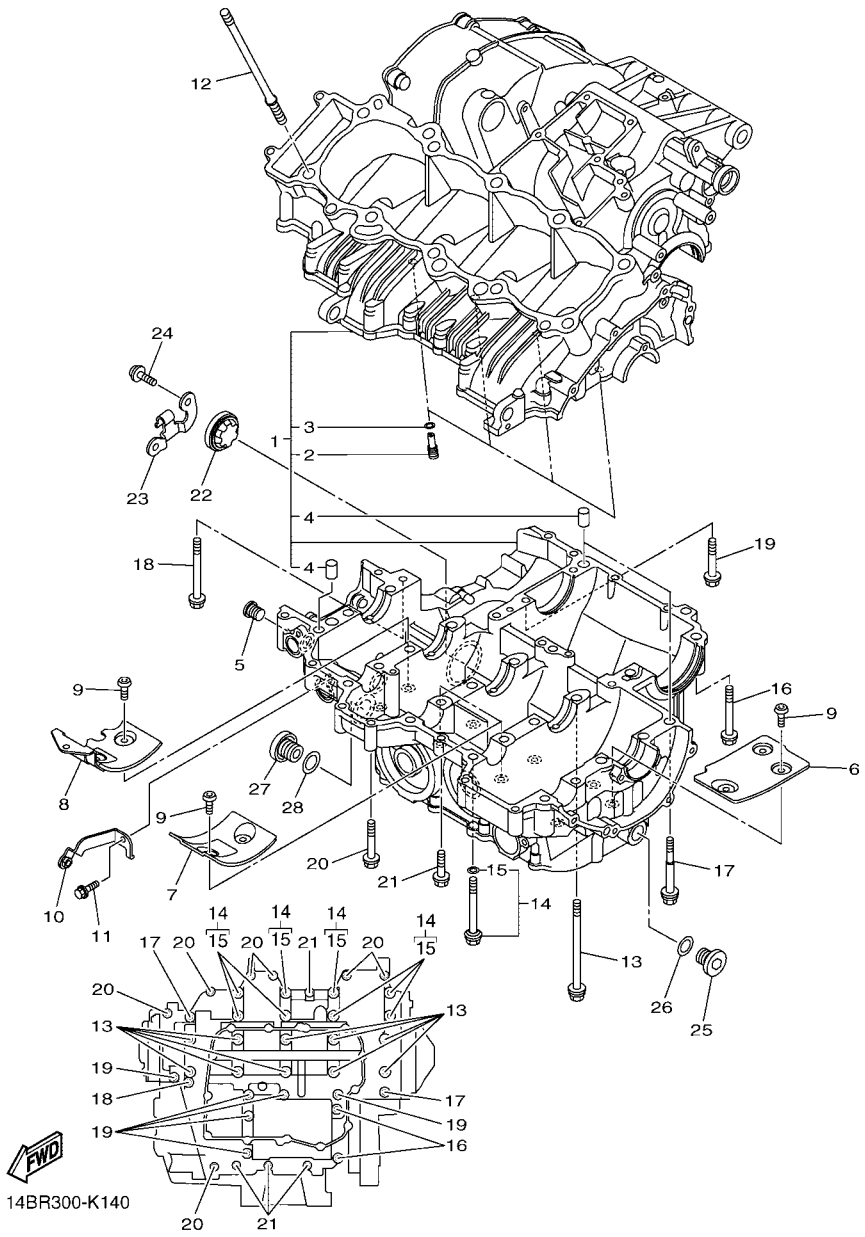

FIG. 14 CARTER

REF. Nº	CODIGO Nº	DESCRIPCION	2SG5					OBSERVACIONES
1	14B–15100–08	CARTER COMPLETO	1					
2	5EB–15155–00	.BOQUILLA 3	4					
3	93210–04092	.ANILLO O	4					
4	99530–10014	.PASADOR, DE ESPIGA	3					
5	90340–12003	TORNILLO, DE DRENAJE	1					
6	14B–15123–00	PLACA DEFLECTORA 1	1					
7	14B–15124–00	PLACA DEFLECTORA 2	2					
8	14B–15133–00	PLACA, DEFLECTORA 3	1					
9	90149–06082	TORNILLO DE REGLAJE	10					
10	14B–28322–00	SOPORTE 2	1					
11	90105–06181	TORNILLO	1					
12	90116–10051	ESPARRAGO	10					
13	90119–09010	TORNILLO CON ARANDELA	10					
14	14B–15156–00	TORNILLO, CARTER MANIVELA MUNO	8					
15	93210–07540	.ANILLO O	1					
16	95812–08060	TORNILLO DE REBORDE	2					
17	90109–06100	PERNO	2					
18	90105–06165	TORNILLO	1					
19	95812–06060	TORNILLO DE REBORDE	6					
20	95812–06050	TORNILLO DE REBORDE	7					
21	95812–06040	TORNILLO DE REBORDE	4					
22	5PW–15361–00	MEDIDOR DE NIVEL	1					
23	14B–15441–01	SOSTEN DE CABLE DE EMBRAGUE	1					
24	90110–06340	TORNILLO ALLEN	2					
25	36Y–15189–00	TAPON	2					
26	93210–16325	ANILLO O	2					
27	4H7–15189–00	TAPON	1					

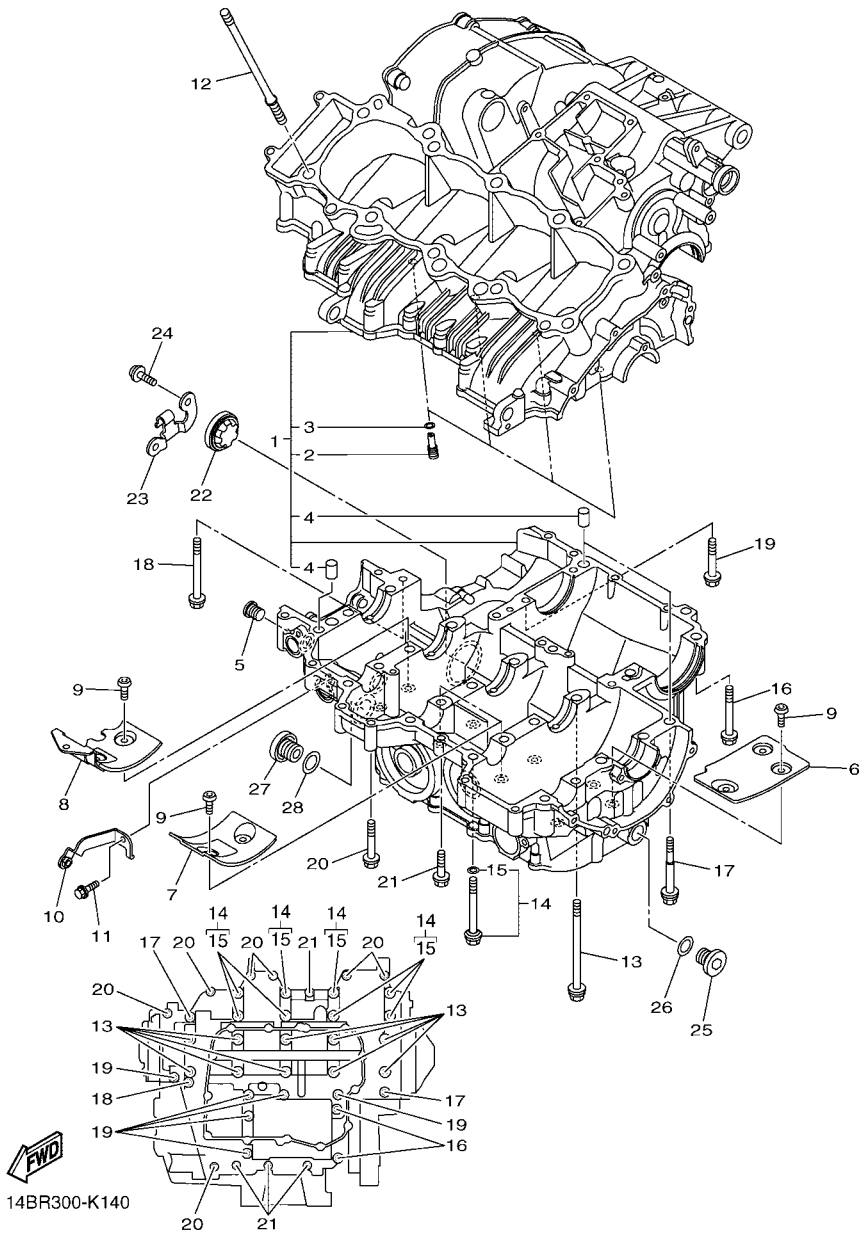

FIG. 14 CARTER

REF. Nº	CODIGO Nº	DESCRIPCION	2SG5					OBSERVACIONES
28	93210–207A0	ANILLO O	1					

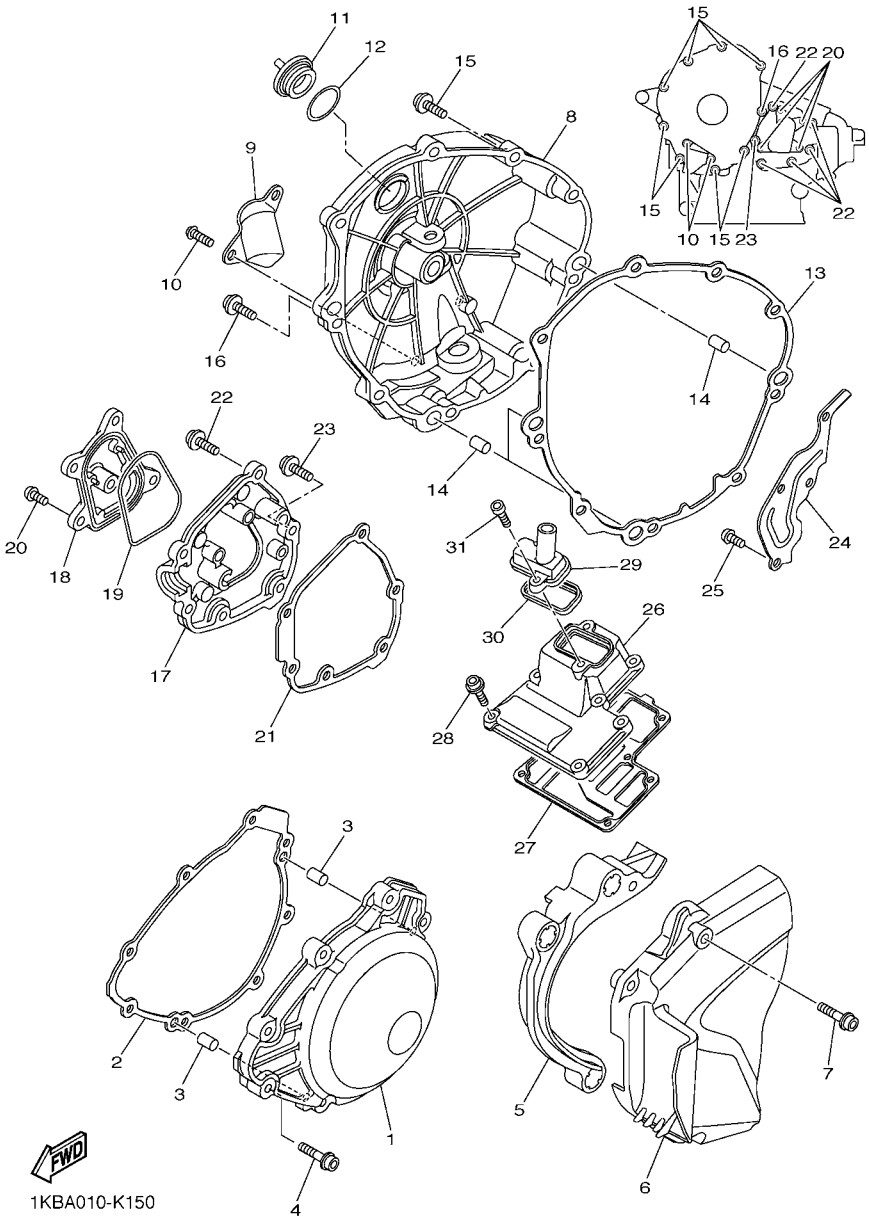

FIG. 15 CUBIERTA DE CARTER 1

REF. Nº	CODIGO Nº	DESCRIPCION	2SG5					OBSERVACIONES
1	14B–15411–00	CUBIERTA DE CARTER 1	1					
2	14B–15451–00	EMPAQ DE CUBIERTA DE CARTER	1					
3	99530–08012	PASADOR, DE ESPIGA	2					
4	90110–06387	TORNILLO ALLEN	8					
5	14B–15377–00	GUIA DE ENTRADA	1					
6	14B–15418–00	CUBIERTA CAJA DE CADENA	1					
7	90110–06390	TORNILLO ALLEN	3					
8	14B–15421–00	TAPA DE CARTER DERECHA	1					
9	5VY–15499–00	PROTECTOR	1					
10	90149–06152	TORNILLO DE REGLAJE	2					
11	3F9–15362–10	TAPON DEL NIVEL DE ACEITE	1					
12	93210–27778	ANILLO O	1					
13	14B–15461–00	JUNTA TAPA CARTER DERECHO 2	1					
14	93610–20189	PASADOR DE CLAVIJA	3					
15	90110–06388	TORNILLO ALLEN	8					
16	90110–06389	TORNILLO ALLEN	1					
17	14B–15416–00	CUBIERTA DE BOMBA DE ACEITE	1					
18	14B–15431–01	CUBIERTA DE CARTER 3	1					
19	93210–68001	ANILLO O	1					
20	90149–06152	TORNILLO DE REGLAJE	4					
21	14B–15456–00	EMPAQ CUBTA.BOMBA ACEITE 1	1					
22	90110–06396	TORNILLO ALLEN	5					
23	90110–06388	TORNILLO ALLEN	1					
24	14B–11165–00	PLACA RESPIRADERO	1					
25	90149–06158	TORNILLO DE REGLAJE	4					
26	14B–15413–00	CUBIERTA	1					
27	14B–15462–00	EMPAQ CUBIERTA DE CARTER 3	1					

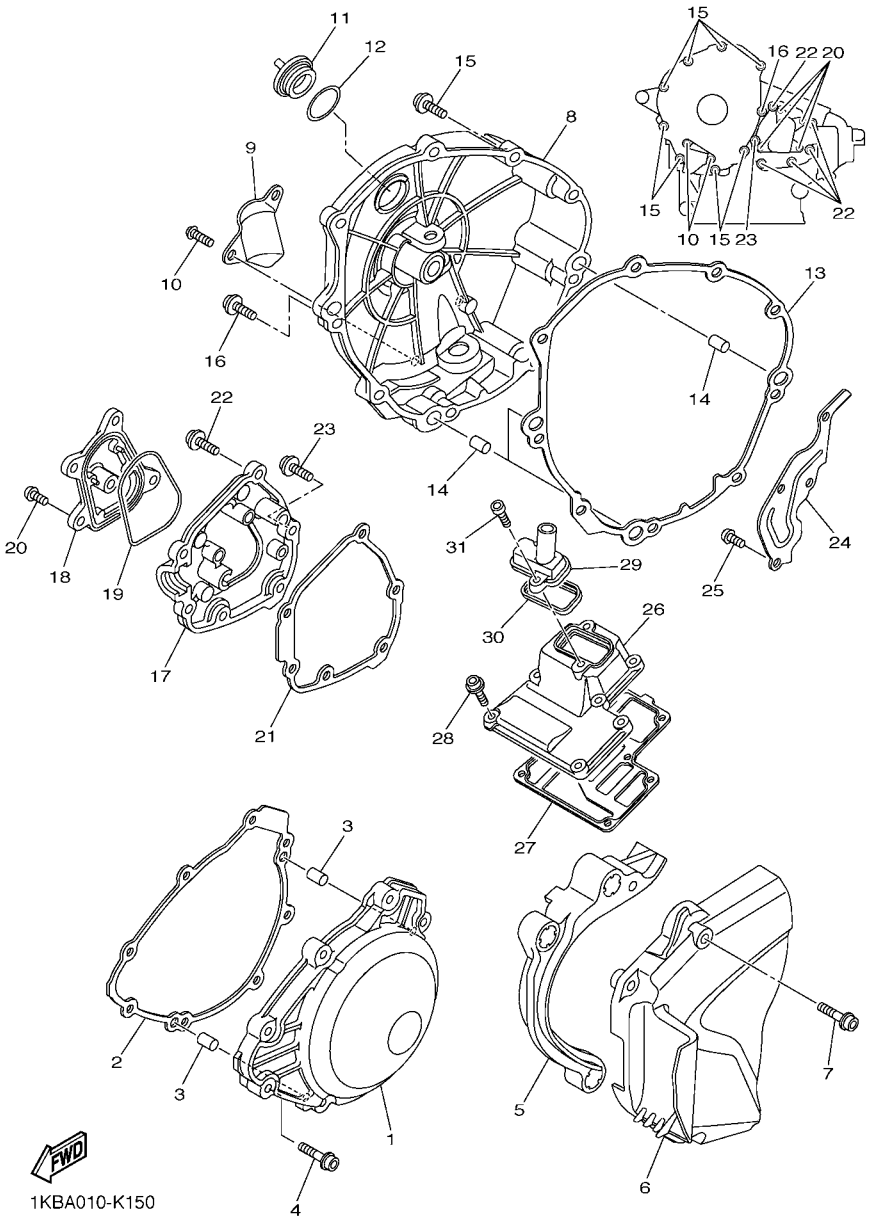

FIG. 15 CUBIERTA DE CARTER 1

REF. Nº	CODIGO Nº	DESCRIPCION	2SG5					OBSERVACIONES
28	90110–06387	TORNILLO ALLEN	6					
29	14B–15423–01	CUBIERTA 2	1					
30	14B–15379–00	SELLO DE CARTER	1					
31	90110–06178	TORNILLO ALLEN	2					

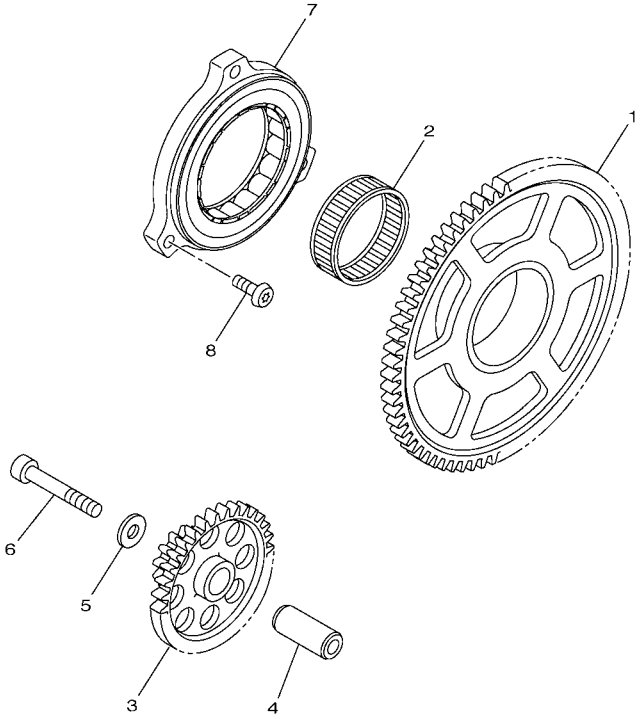

14B1300-H160

FIG. 16 ARRANQUE

REF. Nº	CODIGO Nº	DESCRIPCION	2SG5					OBSERVACIONES
1	14B–15515–00	ENGRANAJE 3	1					
2	93310–24160	COJINETE DE RODILLOS	1					
3	14B–15517–00	ENGRENAJE POSICION 2DA	1					
4	14B–15521–00	EJE 1	1					
5	90201–06589	ARANDELA PLANA	1					
6	90110–06223	TORNILLO ALLEN	1					
7	14B–15570–00	EMBRAGUE DEL ARRANQUE COMPLETA	1					
8	90149–06158	TORNILLO DE REGLAJE	3					

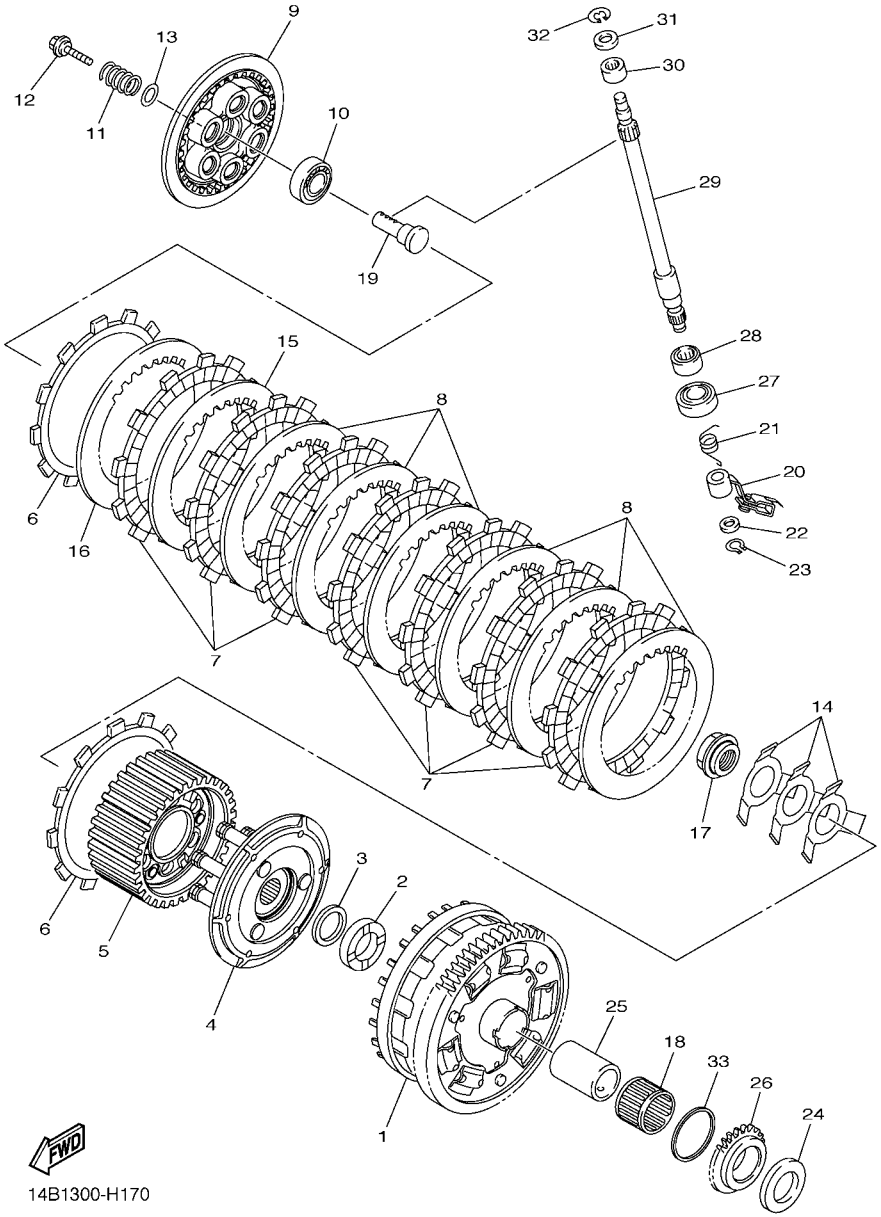

FIG. 17 EMBRAGUE

REF. Nº	CODIGO Nº	DESCRIPCION	2SG5					OBSERVACIONES
1	14B–16150–20	CAMPANA DE EMBRAGUE	1					
2	4C8–16154–00	ARANDELA, DE EMPUJE 1	1					
3	90208–25002	ARANDELA DE RESORTE CONICO	1					
4	1KB–16360–00	PLACA DE PRESION COMPL. 2	1					
5	1KB–16370–10	COPA DE EMBRAGUE COMPLETA	1					
6	14B–16330–00	PLACA DE FRICCION 2	2					
7	5VY–16321–00	PLACA DE FRICCION	7					
8	5VY–16325–00	DISCO, DE EMBRAGUE	6					
9	14B–16351–00	PLATO DE PRESION	1					
10	93306–00304	COJINETE	1					
11	90501–240A2	RESORTE DE COMPRESION	6					
12	90159–06026	TORNILLO CON VALONA	6					
13	14B–16384–00	PLACA DE ASIENTO	6					
14	2S3–16539–00	RESORTE	3					
15	5VY–16325–00	DISCO, DE EMBRAGUE	1					UR (T2.0)
	4B1–16325–00	DISCO, DE EMBRAGUE	1					UR (T2.3)
16	5VY–16325–00	DISCO, DE EMBRAGUE	1					UR (T2.0)
	4B1–16324–00	PLACA DE EMBRAGUE	1					UR (T1.6)
	4B1–16325–00	DISCO, DE EMBRAGUE	1					UR (T2.3)
17	4C8–16377–00	TUERCA DE CIERRE	1					
18	93310–23168	COJINETE DE RODILLOS	1					
19	4XV–16356–01	VARILLA DE EMPUJE 1	1					
20	14B–16340–00	PALANCA DE EMPUJE COMPLETA	1					
21	90508–16041	RESORTE DE TORSION	1					
22	90201–10029	ARANDELA PLANA	1					
23	99009–10400	PRESILLA REDONDA	1					
24	363–16154–00	ARANDELA, DE EMPUJE 1	1					

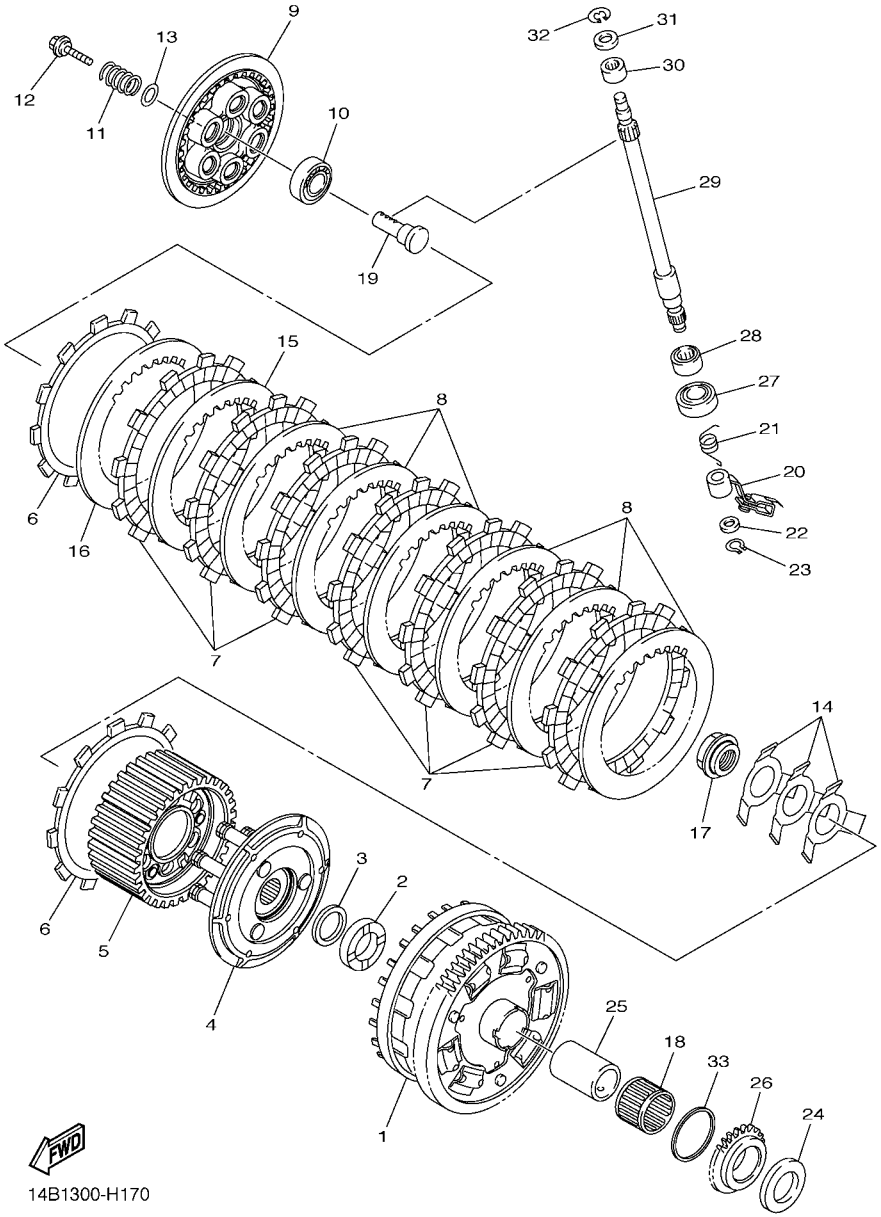

FIG. 17 EMBRAGUE

REF. Nº	CODIGO Nº	DESCRIPCION	2SG5					OBSERVACIONES
25	14B–16181–00	SEPARADOR	1					
26	14B–13354–00	CATALINA	1					
27	93102–15212	SELLO ACEITE	1					
28	93315–21570	COJINETE DE RODILLOS	1					
29	5VY–16382–10	EJE DE PALANCA DE EMPUJE	1					
30	93317–11096	COJINETE	1					
31	92907–08600	ARANDELA	1					
32	99001–07600	PRESILLA REDONDA	1					
33	90201–44008	ARANDELA PLANA	1					

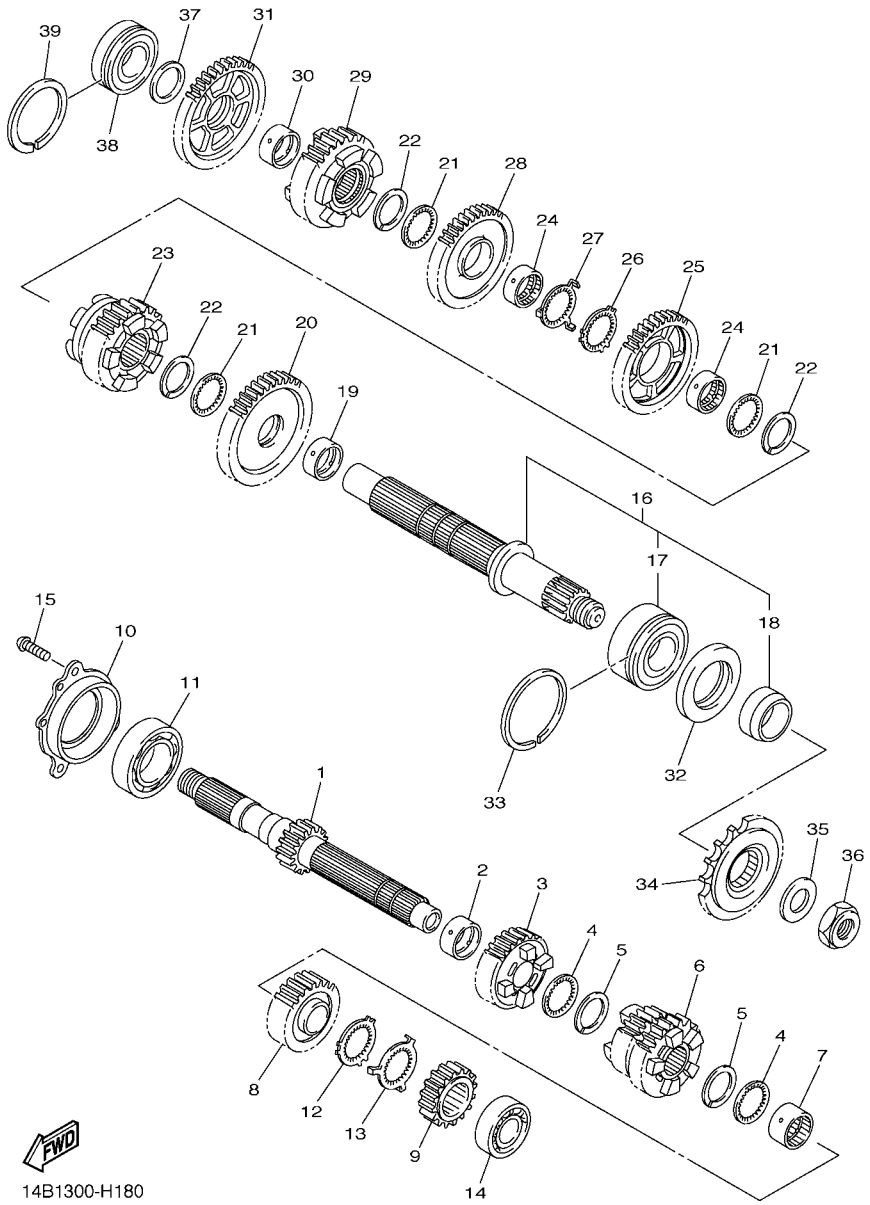

FIG. 18 TRANSMISION

REF. Nº	CODIGO Nº	DESCRIPCION	2SG5					OBSERVACIONES
1	14B–17411–00	EJE PRIMARIO (15T)	1					
2	90387–28003	ESPACIADOR	1					
3	4C8–17151–00	ENGRANAJE PINON DE 5TA (22T)	1					
4	90209–25011	ARANDELA DE SEPARACION	2					
5	93440–28184	SEGURO	2					
6	1KB–17131–00	ENGRANAJE PINON DE 3RA(21/23T)	1					
7	90387–25023	ESPACIADOR	1					
8	1KB–17161–00	ENGRANAJE PINON 6TA (26T)	1					
9	2D1–17121–10	ENGRANAJE DE PINON DE 2DA(16T)	1					
10	14B–15163–00	CAJA DE COJINETE 1	1					
11	93306–20652	COJINETE	1					
12	90214–25004	ARANDELA DE POSICION	1					
13	90214–25003	ARANDELA DE POSICION	1					
14	93306–27209	COJINETE	1					
15	90149–06082	TORNILLO DE REGLAJE	3					
16	1KB–17402–00	EJE DE TRACCION COMPLETO	1					
17	93305–20605	.COJINETE	1					
18	90387–30012	.ESPACIADOR	1					
19	90387–31003	ESPACIADOR	1					
20	14B–17221–00	ENGRANAJE RUEDA DE 2DA (33T)	1					
21	90209–28008	ARANDELA DE SEPARACION	3					
22	93440–31187	SEGURO	3					
23	14B–17261–00	ENGRANAJE DE RUEDA 6TA (33T)	1					
24	90387–28004	ESPACIADOR	2					
25	14B–17241–00	ENGRANAJE DE RUEDA 4TA (35T)	1					
26	90214–29002	ARANDELA DE POSICION	1					
27	90214–28002	ARANDELA DE POSICION	1					

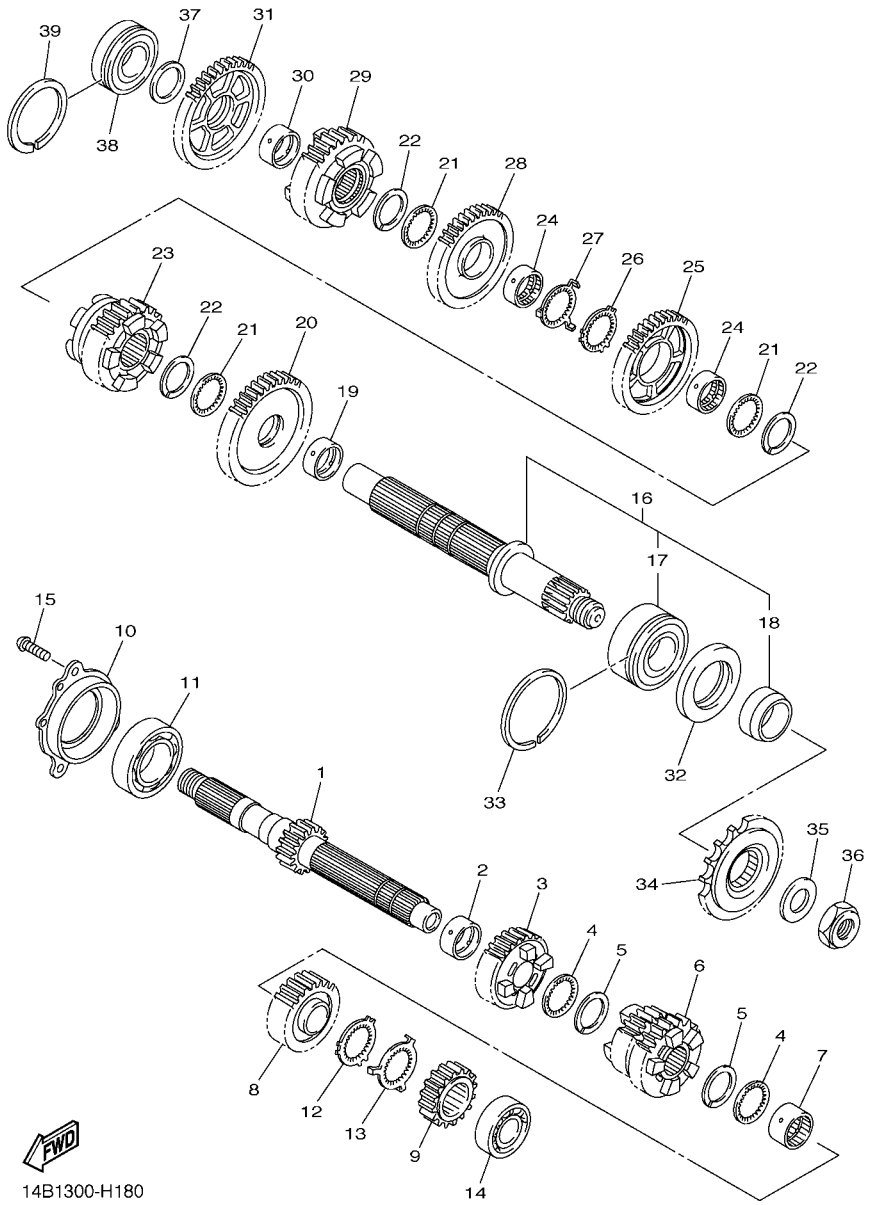

FIG. 18 TRANSMISION

REF. Nº	CODIGO Nº	DESCRIPCION	2SG5					OBSERVACIONES
28	14B–17231–00	ENGRANAJE RUEDA DE 3RA (37T)	1					
29	14B–17251–00	ENGRANAJE DE RUEDA 5TA (30T)	1					
30	90387–25008	ESPACIADOR	1					
31	5VY–17211–00	ENGRANAJE RUEDA DE 1RA (38T)	1					
32	93102–40330	SELLO ACEITE	1					
33	93440–62032	SEGURO	1					
34	3C3–17460–00	RUEDA DENTADA (17T)	1					
35	90201–22015	ARANDELA PLANA	1					
36	90179–22019	TUERCA	1					
37	90201–257H0	ARANDELA PLANA	1					
38	93306–205A2	COJINETE	1					
39	93440–52009	SEGURO	1					

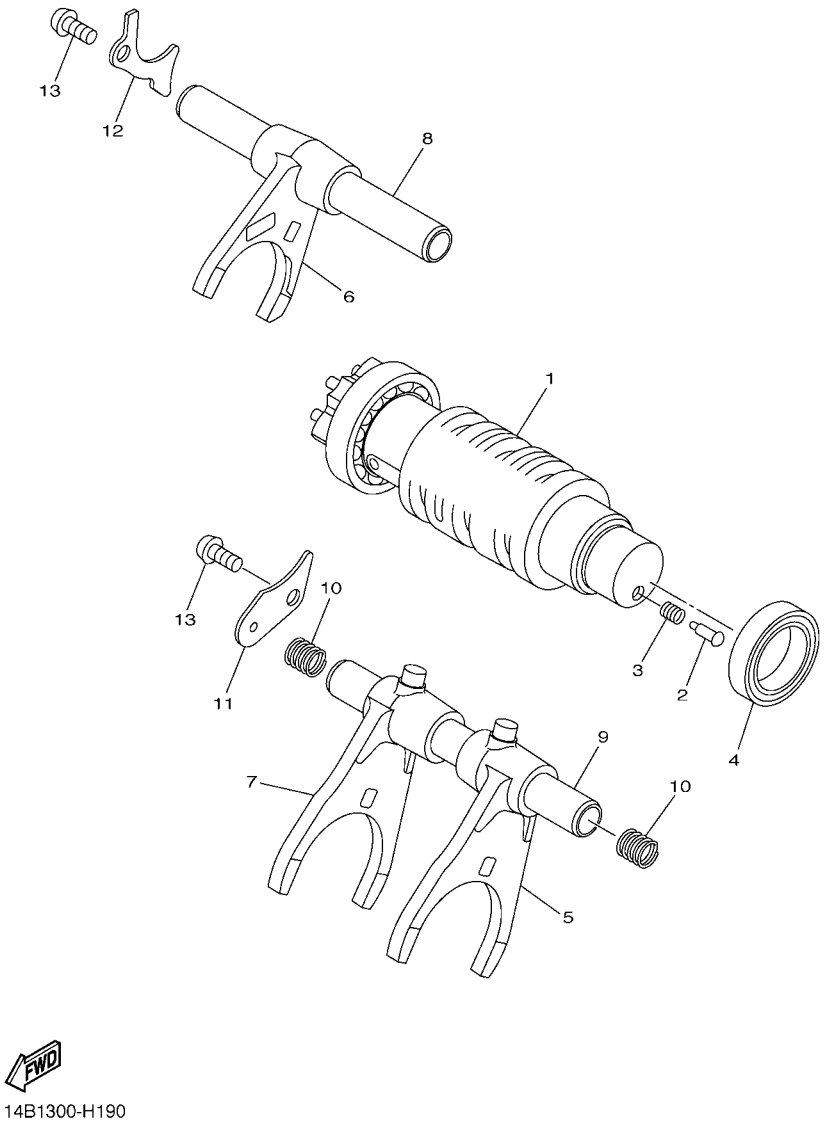

FIG. 19 LEVA DE CAMBIO & HORQUILLA

REF. Nº	CODIGO Nº	DESCRIPCION	2SG5					OBSERVACIONES
1	14B–18540–00	LEVA DEL CAMBIO COMPLETA	1					
2	3D7–18542–00	PUNTO MUERTO	1					
3	90501–06022	RESORTE DE COMPRESION	1					
4	93306–80502	COJINETE	1					
5	14B–18511–00	HORQUILLA DEL CAMBIO 1	1					
6	14B–18512–00	HORQUILLA DEL CAMBIO 2	1					
7	14B–18513–00	HORQUILLA DEL CAMBIO 3	1					
8	14B–18531–00	BARRA GUIA HORQ. CAMBIO 1	1					
9	2C0–18535–00	BARRA GUIA HORQ .CAMBIO 2	1					
10	90501–080A2	RESORTE DE COMPRESION	2					
11	14B–18536–00	TOPE DE PALANCA SELECTOR	1					
12	14B–18562–00	PLACA DE TOPE 2	1					
13	90149–06158	TORNILLO DE REGLAJE	2					

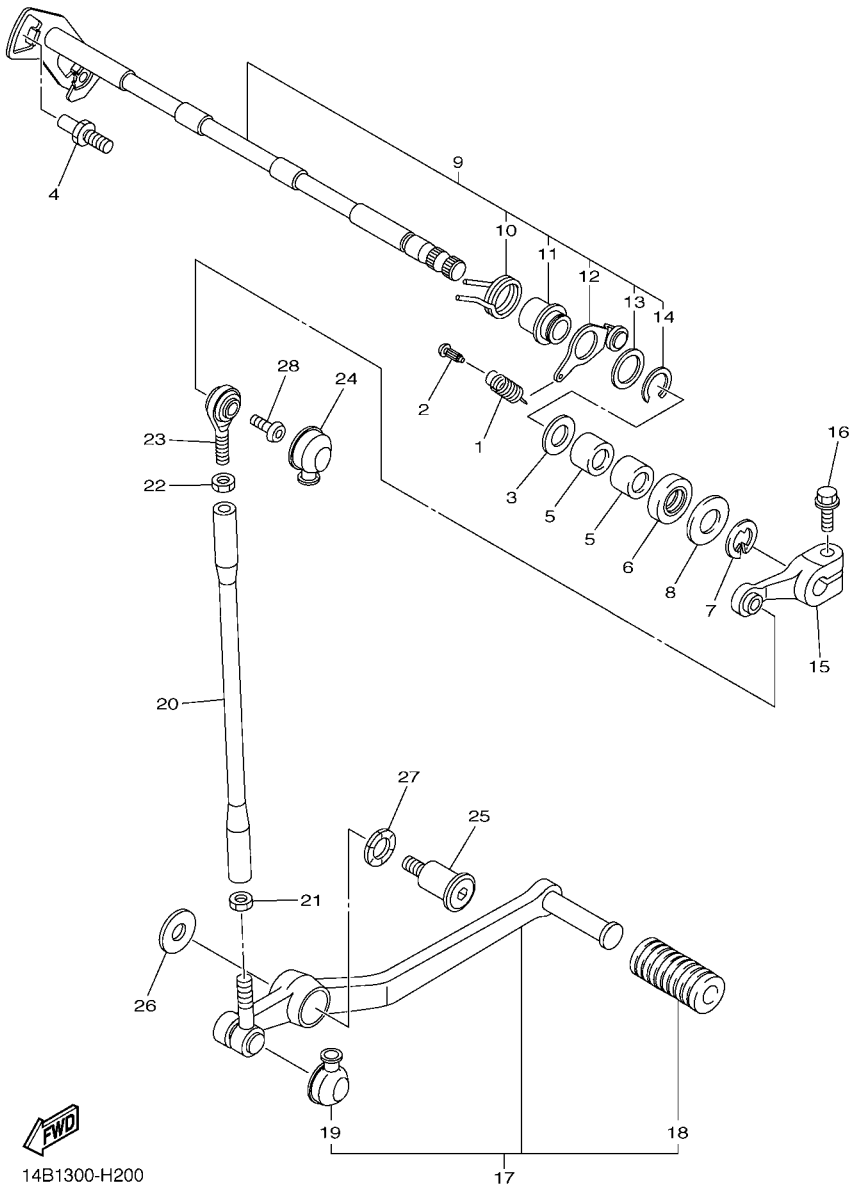

FIG. 20 EJE DE CAMBIO & PEDAL

REF. Nº	CODIGO Nº	DESCRIPCION	2SG5					OBSERVACIONES
1	90506–18021	RESORTE DE TENSION	1					
2	132–16346–00	GANCHO DE RESORTE	1					
3	90201–127E1	ARANDELA PLANA	1					
4	1D7–18127–00	PASADOR DE PALANCA	1					
5	93317–11295	COJINETE	2					
6	93102–12106	SELLO ACEITE (SD 12-22-5 HS)	1					
7	99002–10600	PRESILLA REDONDA	1					
8	90201–12575	ARANDELA PLANA	1					
9	14B–18101–01	EJE SELECTOR COMPLETO	1					
10	90508–32141	.RESORTE DE TORSION	1					
11	2C0–18175–00	.ESPACIADOR	1					
12	14B–18140–00	.PALANCA DE TOPE COMPLETA	1					
13	90201–177G4	.ARANDELA PLANA	1					
14	99009–17400	.PRESILLA REDONDA	1					
15	5JJ–18112–20	BRAZO DEL CAMBIO	1					
16	95022–06020	PERNO, DE BRIDA	1					
17	14B–18110–00	PEDAL DE CAMBIO COMPLETO	1					
18	5EB–18113–00	.FUNDA DEL PEDAL DEL CAMBIO	1					
19	4XV–18154–00	.CUBIERTA GUARDAPOLVO	1					
20	5LV–18115–10	VARILLA DEL CAMBIO	1					
21	90170–06228	TUERCA	1					
22	95304–06700	TUERCA	1					
23	5LV–18116–00	VARILLA DE CONECTOR 1	1					
24	4XV–18154–00	CUBIERTA GUARDAPOLVO	1					
25	4C8–27434–00	PERNO	1					
26	90201–08103	ARANDELA PLANA	1					
27	90206–14086	ARANDELA ONDULADA	1					

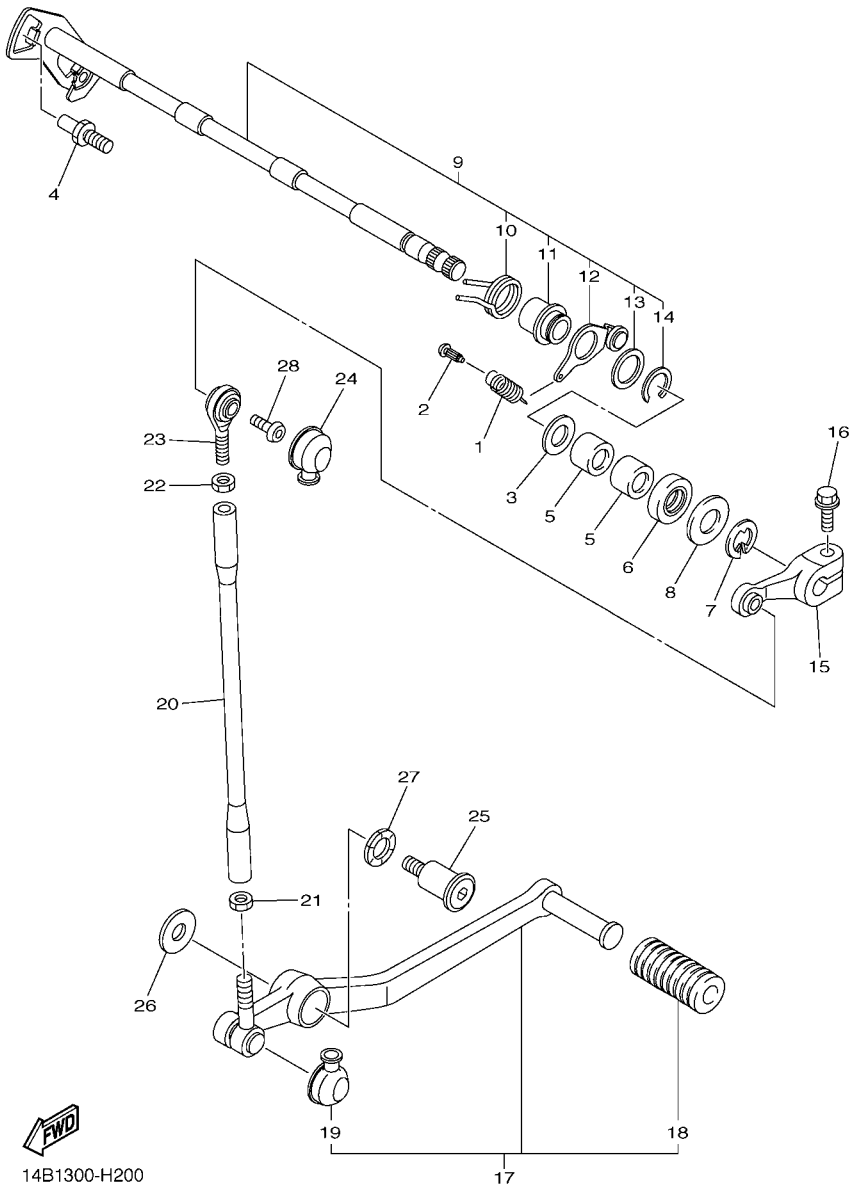

FIG. 20 EJE DE CAMBIO & PEDAL

REF. Nº	CODIGO Nº	DESCRIPCION	2SG5					OBSERVACIONES
28	90111–06019	TORNILLO	1					

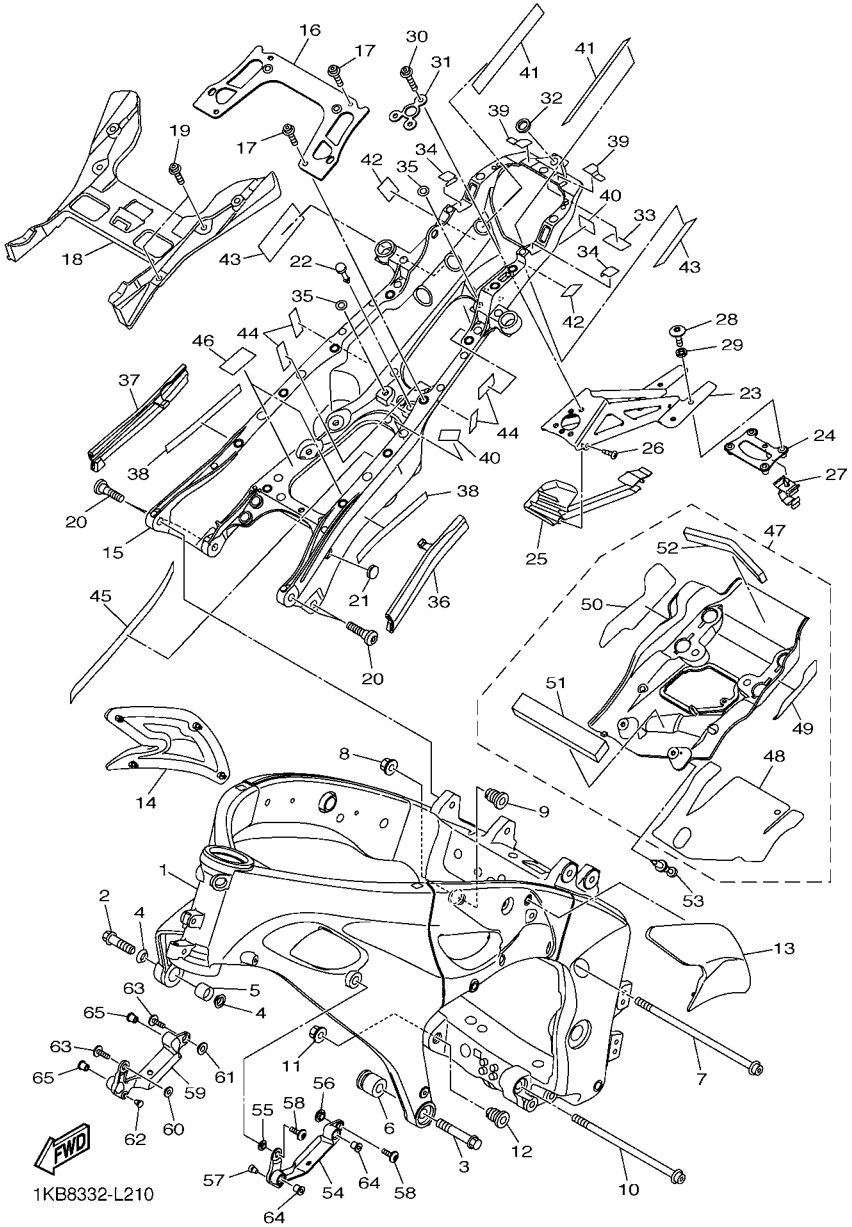

FIG. 21 CUADRO

REF. Nº	CODIGO Nº	DESCRIPCION	2SG5					OBSERVACIONES
1	14B–21110–00	ARMAZON COMPLETO	1					
2	90105–12062	TORNILLO	1					
3	95812–12080	TORNILLO DE REBORDE	1					
4	14B–21414–00	COPA DE MONTANTE DE MOTOR	2					
5	14B–21424–00	COPA DE MONTANTE DE MOTOR	1					
6	14B–2141R–00	COPA	1					
7	90110–10024	TORNILLO ALLEN	1					
8	90179–10028	TUERCA	1					
9	14B–21495–00	PERNO DE AJUSTE	1					
10	90110–10023	TORNILLO ALLEN	1					
11	90179–10028	TUERCA	1					
12	14B–21495–00	PERNO DE AJUSTE	1					
13	14B–24121–00	ASIENTO MANGO DE RODILLA 1	1					
14	14B–24122–00	ASIENTO MANGO DE RODILLA 2	1					
15	14B–21190–00	CUADRO TRASERO COMPLETA	1					
16	14B–21131–00	SOPORTE	1					
17	90110–06163	TORNILLO ALLEN	4					
18	1KB–Y212E–00	REFUERZO, CUADRO TRASERO	1					
19	90110–06163	TORNILLO ALLEN	4					
20	1KB–211C5–00	TORNILLO 1	4					
21	90338–15004	TAPON	1					
22	90269–04025	REMACHE	1					
23	14B–21640–10	SOPORTE TRASERO COMPLETO	1					
24	14B–21682–00	SOPORTE DE PLACA	1					
25	14B–2163A–00	CUBIERTA TRAS GUARDABARRO 1	1					
26	97702–50016	TORNILLO ROSCA HEMBRA	1					
27	90464–14228	BRIDA	1					

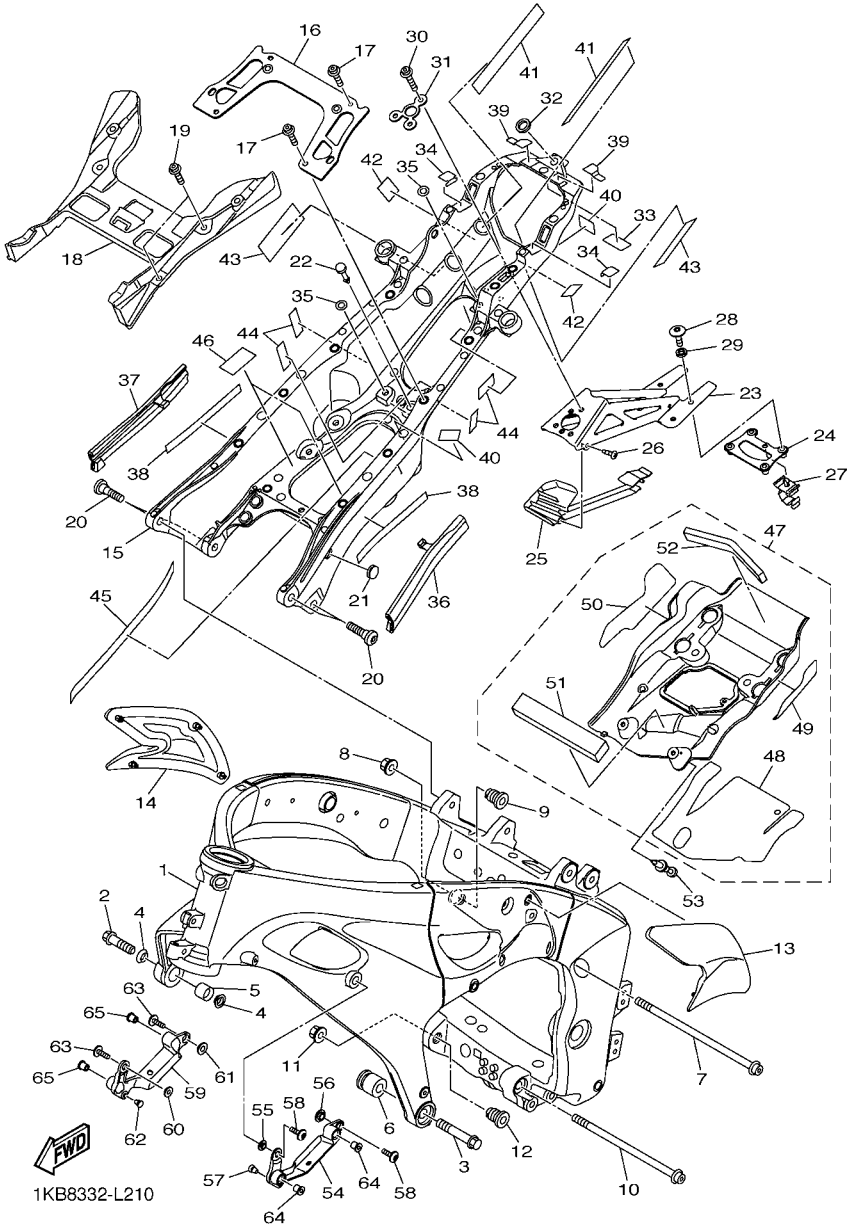

FIG. 21 CUADRO

REF. Nº	CODIGO Nº	DESCRIPCION	2SG5					OBSERVACIONES
28	90111–06129	TORNILLO	4					
29	90387–061Y1	ESPACIADOR	4					
30	90110–06156	TORNILLO ALLEN	3					
31	14B–21615–00	ARANDELA ESPECIAL 1	1					
32	13S–21746–00	AMORTIGUADOR	1					
33	14B–22873–00	SELLO 1	1					
34	14B–22874–00	SELLO 2	2					
35	13S–2173M–00	SELLO 3	2					
36	1KB–22876–00	SELLO 4	1					
37	1KB–22877–00	SELLO 5	1					
38	13S–21567–00	CINTA	2					
39	14B–22879–00	SELLO 7	2					
40	14B–28425–00	AMORTIGUADOR 3	2					
41	3C5–2414H–00	EQUILIBRIO, CUBIERTA	2					
42	14B–28227–00	AMORTIGUADRO 2	2					
43	2S2–2214F–70	AMORTIGUADOR 1	2					
44	14B–28237–00	AMORTIGUADOR 3	4					
45	90520–03010	EQUILIBRIO, CUBIERTA	1					
46	14B–28435–00	AMORTIGUADOR 4	2					
47	14B–2110N–20	CUBIERTA COMPLETO 2	1					
48	14B–2112B–00	.ASIENTO 1	1					
49	14B–2113C–00	.ASIENTO 2	1					
50	14B–2113D–00	.ASIENTO 3	1					
51	90520–15001	.EQUILIBRIO, CUBIERTA	1					
52	90520–15004	.EQUILIBRIO, CUBIERTA	1					
53	90269–06016	REMACHE	2					
54	14B–2836F–00	MENSULA 3	1					

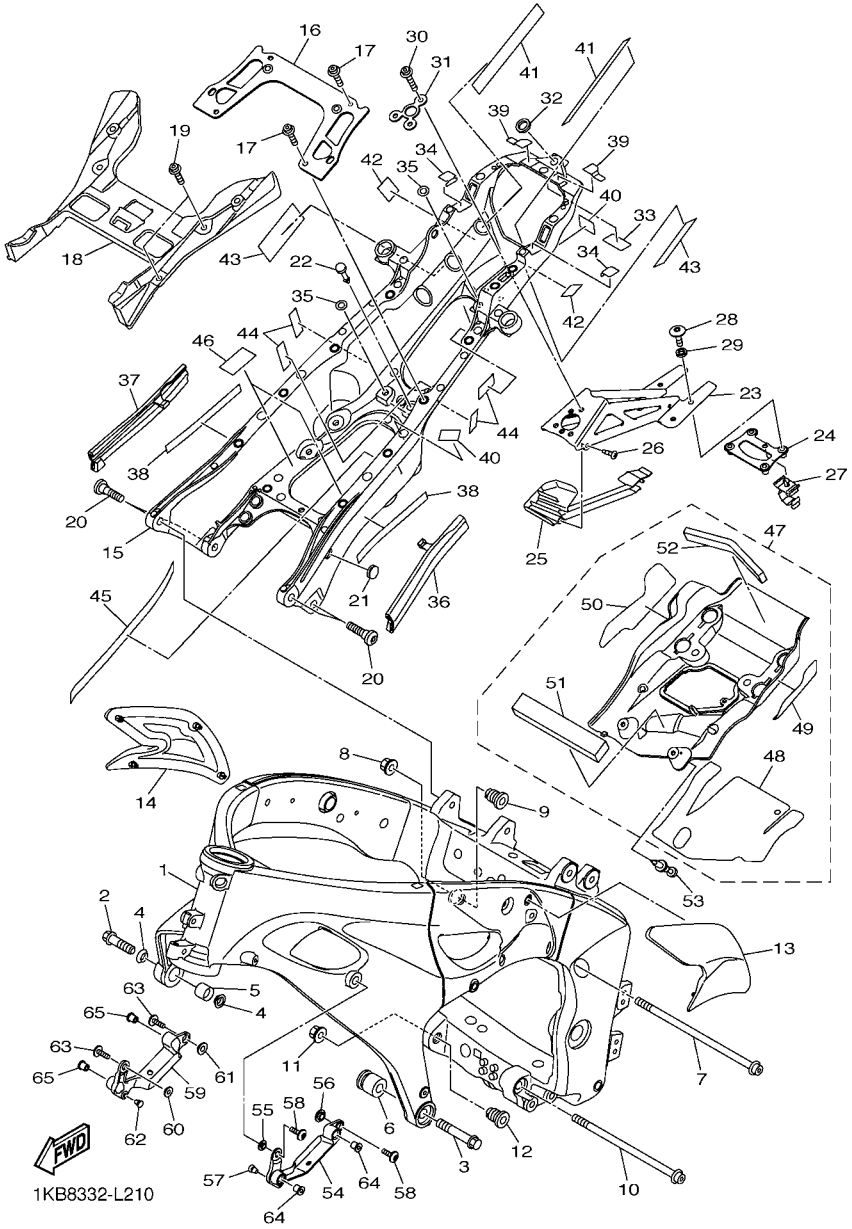

FIG. 21 CUADRO

REF. Nº	CODIGO Nº	DESCRIPCION	2SG5					OBSERVACIONES
55	90387–06217	ESPACIADOR	1					
56	90560–08251	SEPARADOR	1					
57	90338–06018	TAPON	1					
58	90111–06145	TORNILLO	2					
59	14B–2836G–00	MENSULA 4	1					
60	90387–06217	ESPACIADOR	1					
61	90560–08251	SEPARADOR	1					
62	90338–06018	TAPON	1					
63	90111–06145	TORNILLO	2					
64	90179–05013	TUERCA	2					
65	90179–05013	TUERCA	2					

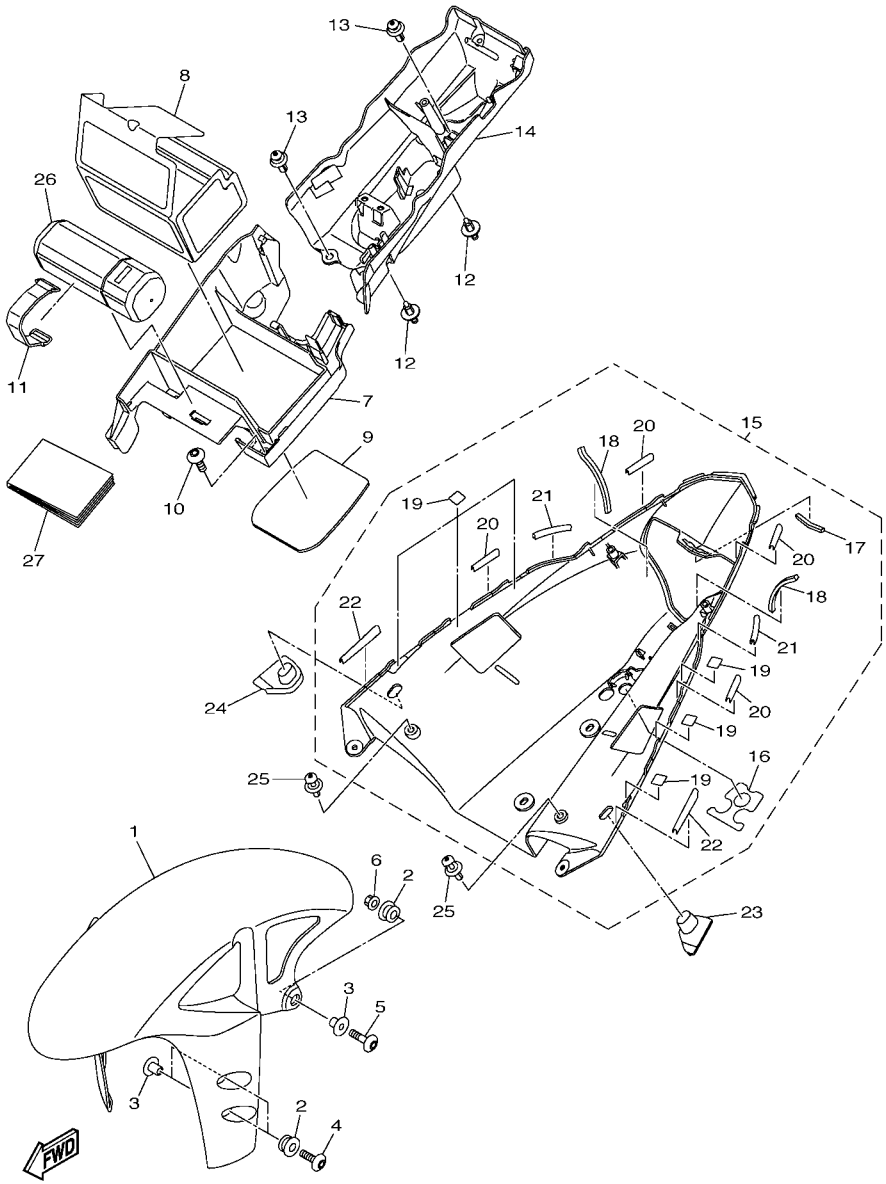

FIG. 22 GUARDABARRO

REF. Nº	CODIGO Nº	DESCRIPCION	2SG5					OBSERVACIONES
1	14B–21511–00–P8	GUARDABARRO DELANTERO	1					DNMN
2	90480–12072	TAPON	6					
3	90387–065J6	ESPACIADOR	6					
4	90111–06043	TORNILLO	4					
5	90111–06030	TORNILLO	2					
6	95702–06500	TUERCA DE BRIDA	2					
7	14B–8212B–00	CAJA DE BATERIA	1					
8	1KB–82122–00	ASIENTO DE BATERIA	1					
9	14B–82176–20	AMORTIGUADOR	1					
10	90149–06302	TORNILLO DE REGLAJE	2					
11	5JJ–82131–00	TIRANTE DE BATERIA	1					
12	90269–07077	REMACHE	2					
13	90269–07012	REMACHE	2					
14	14B–8212C–00	CAJETIN DE BATERIA 2	1					
15	14B–21600–00–P2	GUARDABARRO TRASERO COMPLETO	1					DPBMC
16	14B–21669–00	.SELLO	1					
17	4GY–2174X–00	.AMORTIGUADOR	1					
18	3CV–28372–00	.AMORTIGUADOR	2					
19	4C8–21735–00	.SELLO 2	6					
20	5VY–21732–00	.SELLO 1	4					
21	5PW–21732–00	.SELLO 1	2					
22	14B–21732–00	.SELLO 1	2					
23	14B–21639–00	AMORTIGUADOR 2	1					
24	14B–21649–00	AMORTIGUADOR	1					
25	90269–07076	REMACHE	2					
26	14B–28100–00	JUEGO DE HERRAMIENTAS	1					
27	2SG–28199–S0	MANUAL DEL PROPRIETARIO	1					

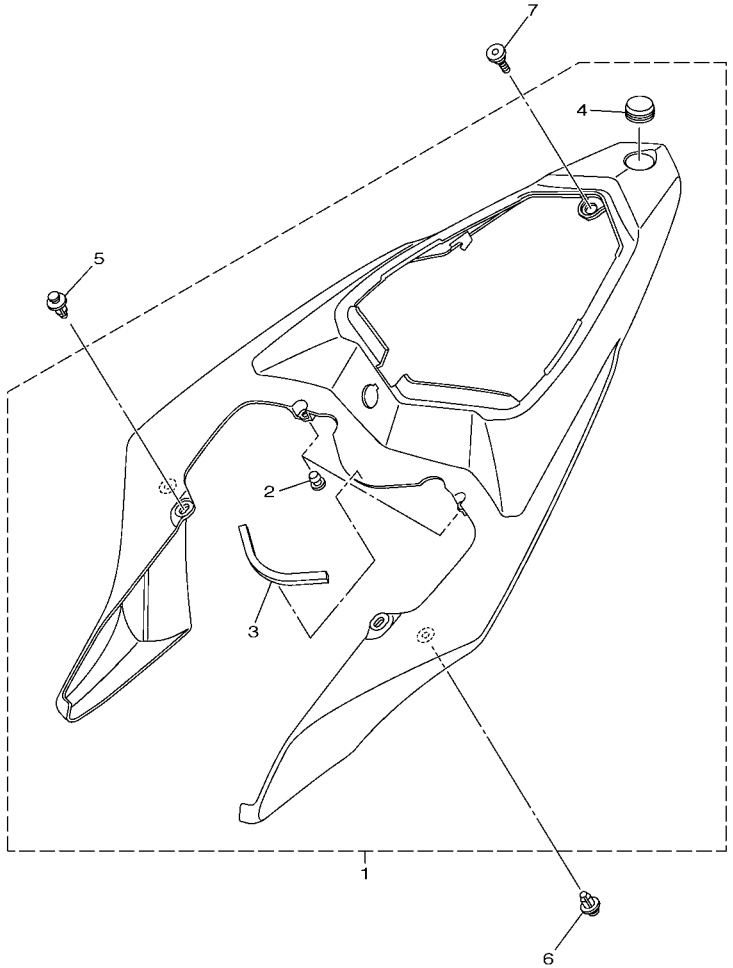

14B1300-H230

FIG. 23 CUBIERTA LATERAL

REF. Nº	CODIGO Nº	DESCRIPCION	2SG5					OBSERVACIONES
1	14B–21710–00–P2	CUBIERTA LATERAL COMPLETA 1	1					DPBMC
2	90338–06018	.TAPON	2					
3	4C8–21747–00	.AMORTIGUADOR	1					
4	4KN–2836B–00	.MARCA	1					
5	90269–06081	REMACHE	2					
6	90269–06001	REMACHE	2					
7	90109–06248	PERNO	1					

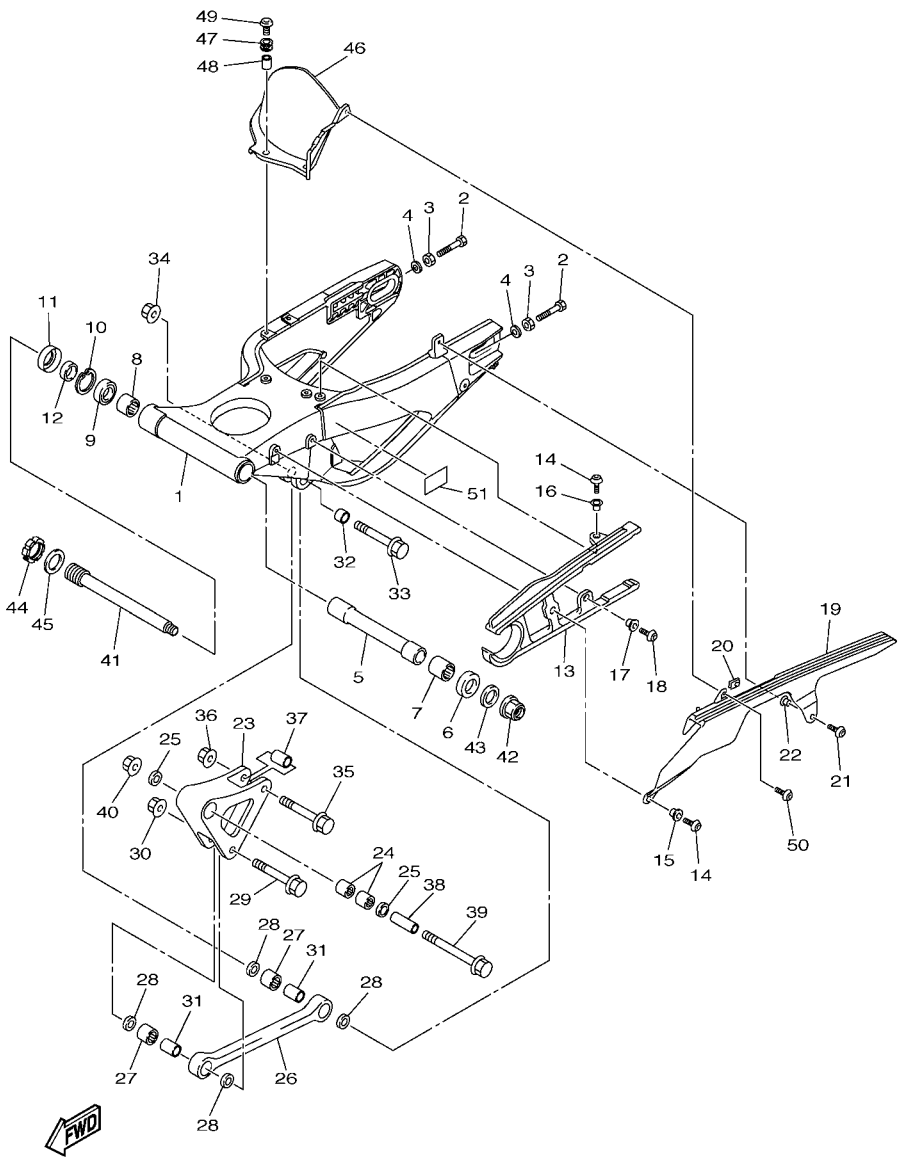

1KB8300-L240

FIG. 24 BRAZO TRASERO

REF. Nº	CODIGO Nº	DESCRIPCION	2SG5					OBSERVACIONES
1	14B–22110–00–P0	BRAZO TRASERO COMPLETO	1					MBL2
2	90101–08013	TORNILLO	2					
3	95302–08600	TUERCA	2					
4	90201–08057	ARANDELA PLANA	2					
5	14B–22184–00	BUJE	1					
6	5VY–22128–00	TAPA DE EMPIJE 1	1					
7	93317–52897	COJINETE	1					
8	93317–428U8	COJINETE	1					
9	93306–97202	COJINETE	1					
10	99009–42500	PRESILLA REDONDA	1					
11	93106–28004	SELLO ACEITE	1					
12	90387–22023	ESPACIADOR	1					
13	14B–22151–00	SELLO DE GUARDA	1					
14	92012–06016	PERNO	2					
15	90387–062X0	ESPACIADOR	1					
16	90387–06066	ESPACIADOR	1					
17	90387–06066	ESPACIADOR	1					
18	92012–06016	PERNO	1					
19	14B–22311–00	CABRECADENA	1					
20	90183–05076	TUERCA DE RESORTE	1					
21	90111–06083	TORNILLO	1					
22	90387–07717	ESPACIADOR	1					
23	1KB–2217A–00	BRAZO REEURIO	1					
24	93315–31758	COJINETE DE RODILLOS	2					
25	93109–17071	SELLO ACEITE	2					
26	1KB–2217M–00	BRAZO 1	1					
27	93315–31758	COJINETE DE RODILLOS	2					

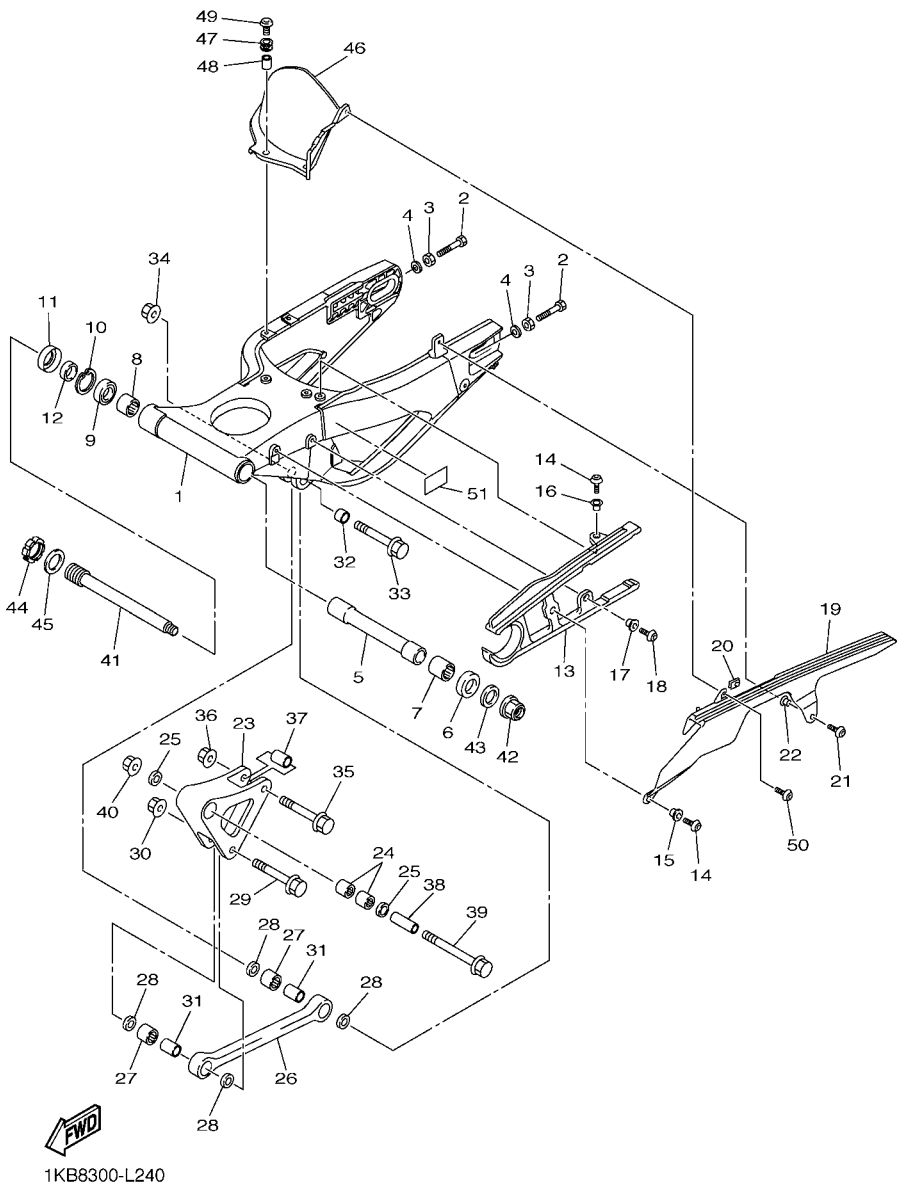

FIG. 24 BRAZO TRASERO

REF. Nº	CODIGO Nº	DESCRIPCION	2SG5					OBSERVACIONES
28	93109–17071	SELLO ACEITE	4					
29	90105–10017	TORNILLO	1					
30	95602–10200	TUERCA DE AUTO-CIERRE	1					
31	90387–1012A	ESPACIADOR	2					
32	90387–1013U	ESPACIADOR	1					
33	90105–10018	TORNILLO	1					
34	95602–10200	TUERCA DE AUTO-CIERRE	1					
35	90105–10017	TORNILLO	1					
36	95602–10200	TUERCA DE AUTO-CIERRE	1					
37	90387–1012A	ESPACIADOR	1					
38	90387–10034	ESPACIADOR	1					
39	90105–10150	TORNILLO	1					
40	95602–10200	TUERCA DE AUTO-CIERRE	1					
41	14B–22141–00	EJE DEL BARCULANTE	1					
42	90185–20008	TUERCA AUTOBLOCANTE	1					
43	90201–20026	ARANDELA PLANA	1					
44	4C8–22252–00	TUERCA	1					
45	90201–30016	ARANDELA PLANA	1					
46	14B–21650–00	GUARDABARRO TRANSERO COMP.	1					
47	90480–12005	TAPON	3					
48	90387–06057	ESPACIADOR	3					
49	90149–06302	TORNILLO DE REGLAJE	3					
50	90111–05002	TORNILLO	1					
51	14B–21668–00	ETIQUETA DE FRANJA	1					

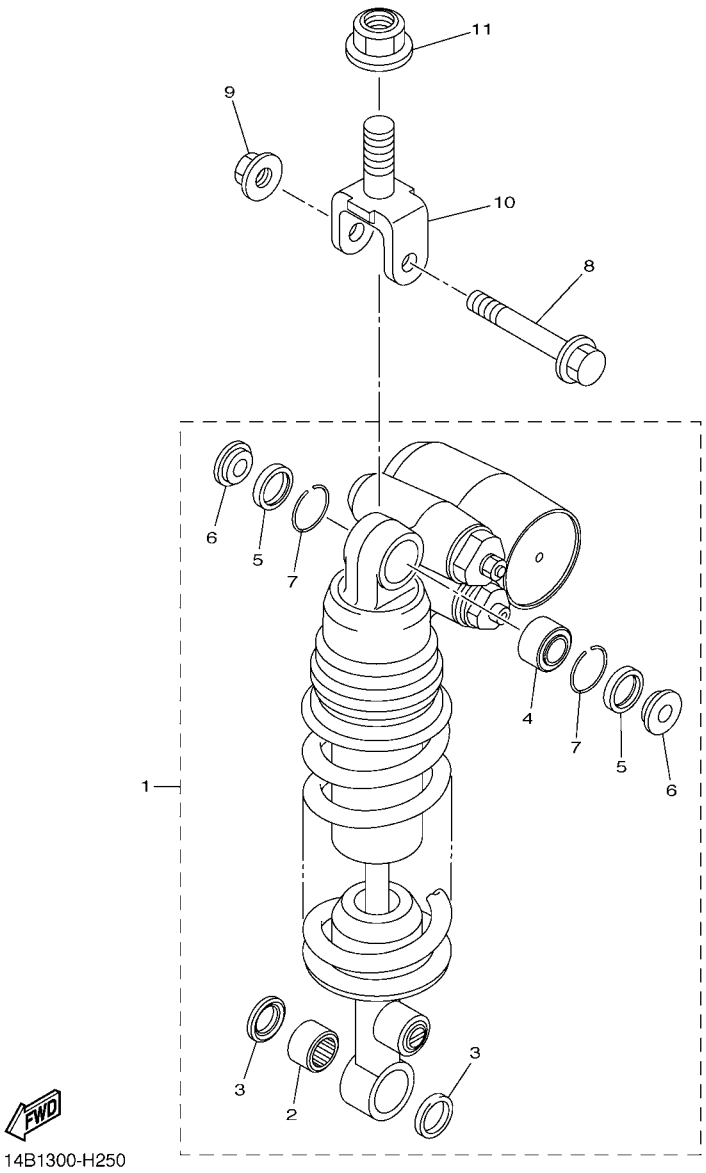

FIG. 25 SUSPENSION TRASERO

REF. Nº	CODIGO Nº	DESCRIPCION	2SG5					OBSERVACIONES
1	1KB–22210–00	AMORTIGUADOR TRASERO COMPLETO	1					
2	93315–31758	.COJINETE DE RODILLOS	1					
3	93109–17071	.SELLO ACEITE	2					
4	93399–999T4	.COJINETE	1					
5	93101–18061	.SELLO ACEITE	2					
6	14B–22253–00	.COLLAR DISTANCIADOR	2					
7	93440–30113	.SEGURO	2					
8	90105–10020	TORNILLO	1					
9	95602–10200	TUERCA DE AUTO-CIERRE	1					
10	1KB–22219–00	SOPORTE SUPERIOR	1					
11	95602–16200	TUERCA DE AUTO-CIERRE	1					

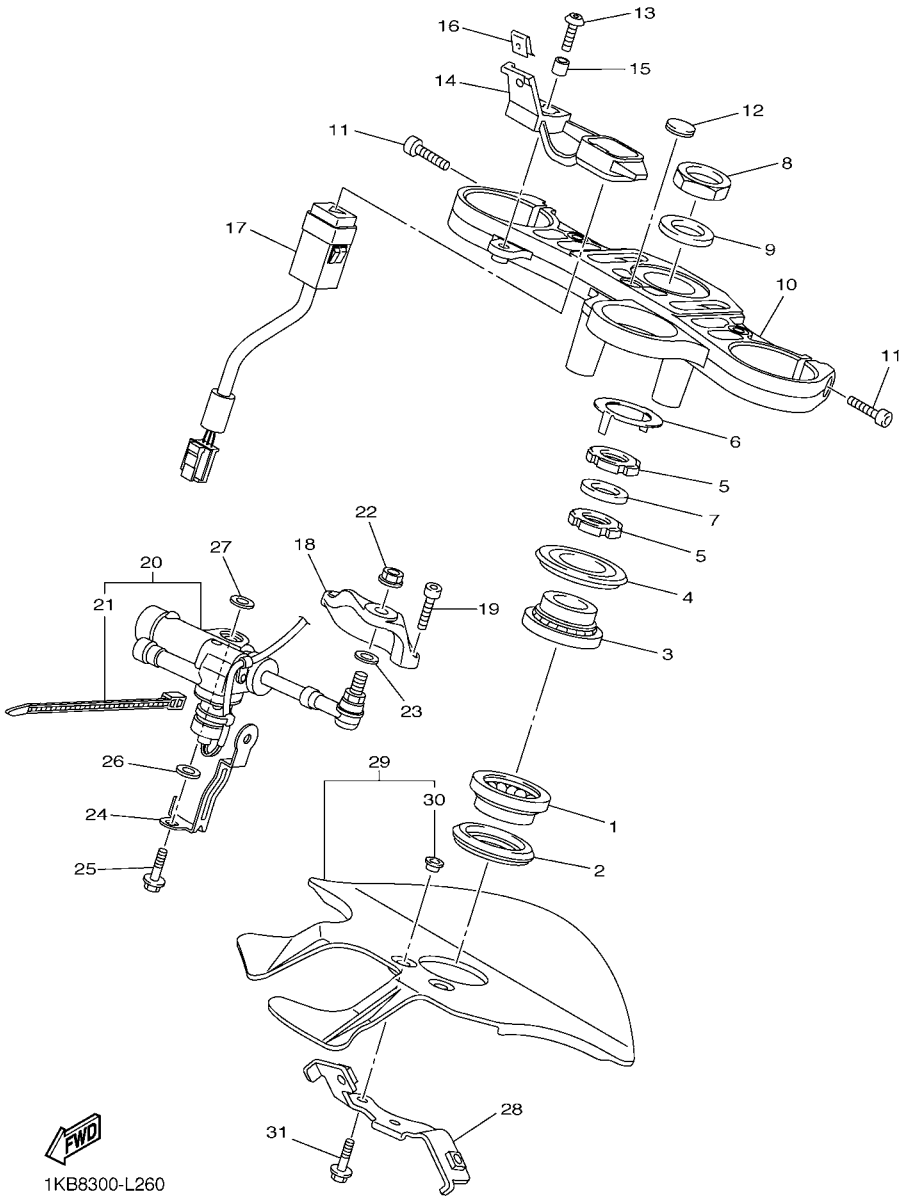

FIG. 26 DIRECCION

REF. Nº	CODIGO Nº	DESCRIPCION	2SG5					OBSERVACIONES
1	93399–99957	COJINETE	1					
2	3FV–23462–00	SELLO PARA POLVO	1					
3	93399–99932	COJINETE	1					
4	4XV–23415–01	CUBIERTA DE PISTA DE BOLAS 1	1					
5	90179–30691	TUERCA	2					
6	4XV–23418–00	ARANDELA ESPECIAL	1					
7	90202–30235	ARANDELA DE PLANA	1					
8	90170–28419	TUERCA	1					
9	90201–281U8	ARANDELA PLANA	1					
10	1KB–23435–00	PLATINA SUPERIOR	1					
11	91314–08030	TORNILLO ALLEN	2					
12	5GT–2836B–00	MARCA	1					
13	90111–06041	TORNILLO	1					
14	1KB–26292–00	SOPORTE	1					
15	90387–06057	ESPACIADOR	1					
16	90183–050A0	TUERCA DE RESORTE	1					
17	1KB–83362–00	INTERRUP.DETELLO PELIGRO	1					
18	14B–23495–00	SOPORTE DE AMORTIGUADOR	1					
19	90110–06175	TORNILLO ALLEN	2					
20	14B–23490–10	AMORT. MANUBRIO OSCILANTE	1					
21	90464–20022	.BRIDA	1					
22	95602–08200	TUERCA DE AUTO-CIERRE	1					
23	90201–08M09	ARANDELA PLANA	1					
24	45B–2331E–00	GUIA DE CABLE	1					
25	90105–08108	TORNILLO	1					
26	90201–08676	ARANDELA PLANA	1					
27	5VY–26398–00	ARANDELA	1					

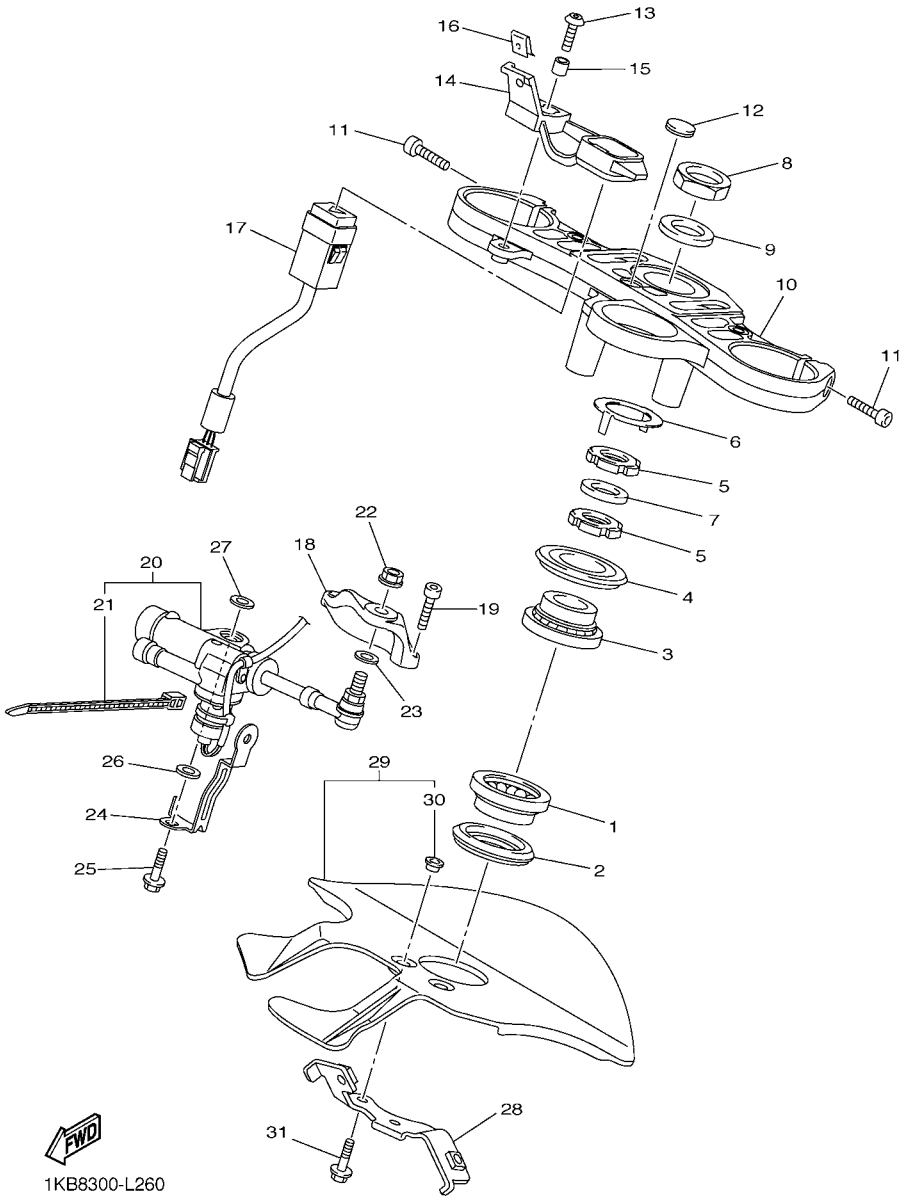

FIG. 26 DIRECCION

REF. Nº	CODIGO Nº	DESCRIPCION	2SG5					OBSERVACIONES
28	14B–23377–20	SOPORTE DE BOCINA	1					
29	14B–23808–00	CUBIERTA COMPLETO	1					
30	90560–06244	.SEPARADOR	2					
31	90105–06557	TORNILLO	2					

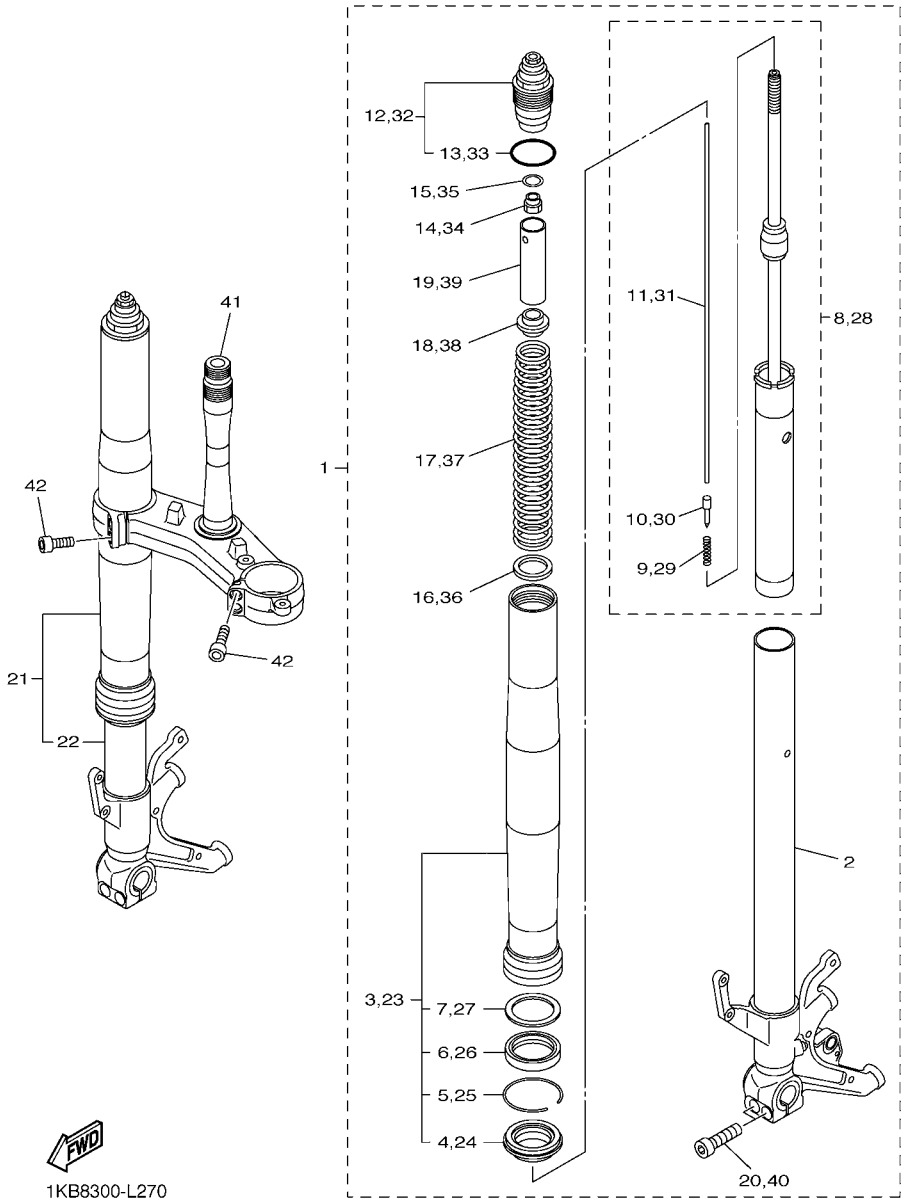

FIG. 27 HORQUILLA DELANTERA

REF. Nº	CODIGO Nº	DESCRIPCION	2SG5					OBSERVACIONES
1	1KB–23102–30	HORQUILLA DELANTERA COMPL.(MI)	1					
2	1KB–23110–01	.TUBO INTERIOR COMPLETO 1	1					
3	14B–23106–20	.TUBO EXTERIOR COMPLETO	1					
4	4TX–23144–01	..GUARDAPOLVO	1					
5	4TX–23156–00	..ANILLO DE ENGANCHE	1					
6	5VX–23145–00	..RETEN DE ACEITE	1					
7	4TX–23115–00	..GUIA DE CUBIERTA SUPERIOR	1					
8	1KB–2315K–00	.CILINDRO	1					
9	14B–2319M–00	..RESORTE, VALVULA	1					
10	14B–23109–00	..VALVULA	1					
11	14B–2318Y–00	..EMBOLO	1					
12	14B–23111–10	.PERNO DE TAPA	1					
13	93210–41N50	..ANILLO O	1					
14	13S–23393–00	.TUERCA ESPECIAL	1					
15	13S–2332N–00	.PLACA DE VALVULA 2	1					
16	90201–25291	.ARANDELA PLANA	1					
17	14B–23141–00	.RESORTE HORQUILLA DELANT.	1					
18	13S–23142–00	.ASIENTO DEL MUELLE SUPERIOR	1					
19	14B–23118–00	.SEPARADOR	1					
20	91314–08035	.TORNILLO ALLEN	2					
21	1KB–23103–30	HORQUILLA DELANTERA COMPL.(MD)	1					
22	1KB–23120–01	.TUBO INTERIOR COMPLETO 2	1					
23	14B–23106–20	.TUBO EXTERIOR COMPLETO	1					
24	4TX–23144–01	..GUARDAPOLVO	1					
25	4TX–23156–00	..ANILLO DE ENGANCHE	1					
26	5VX–23145–00	..RETEN DE ACEITE	1					
27	4TX–23115–00	..GUIA DE CUBIERTA SUPERIOR	1					

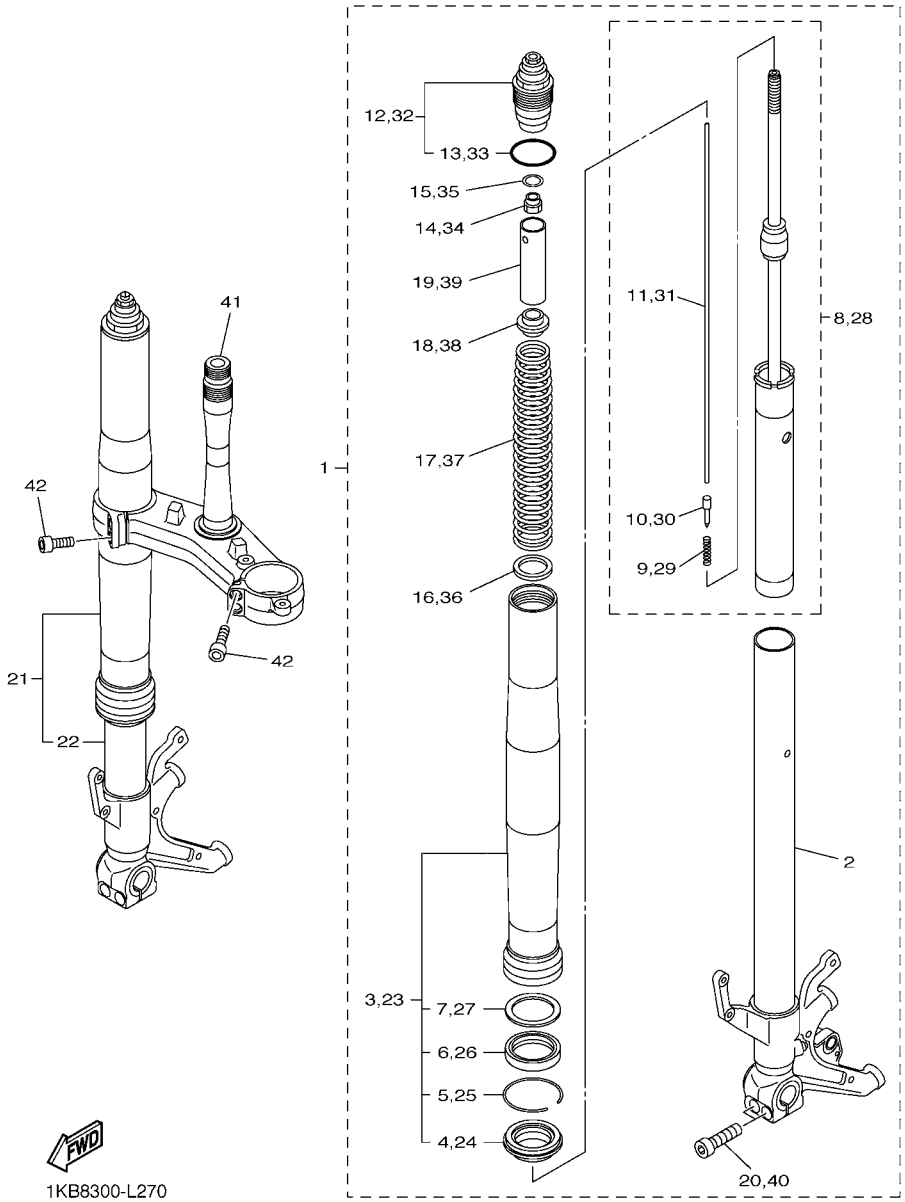

FIG. 27 HORQUILLA DELANTERA

REF. Nº	CODIGO Nº	DESCRIPCION	2SG5					OBSERVACIONES
28	1KB–2315L–00	.CILINDRO	1					
29	14B–2319M–00	..RESORTE, VALVULA	1					
30	14B–23109–00	..VALVULA	1					
31	14B–2318Y–00	..EMBOLO	1					
32	14B–2311J–10	.PERNO DE TAPA 2	1					
33	93210–41N50	..ANILLO O	1					
34	13S–23393–00	.TUERCA ESPECIAL	1					
35	13S–2332N–00	.PLACA DE VALVULA 2	1					
36	90201–25291	.ARANDELA PLANA	1					
37	14B–23141–00	.RESORTE HORQUILLA DELANT.	1					
38	13S–23142–00	.ASIENTO DEL MUELLE SUPERIOR	1					
39	14B–23118–00	.SEPARADOR	1					
40	91314–08035	.TORNILLO ALLEN	2					
41	14B–23340–00	PLATINA INFERIOR COMPLETA	1					
42	91314–08030	TORNILLO ALLEN	4					

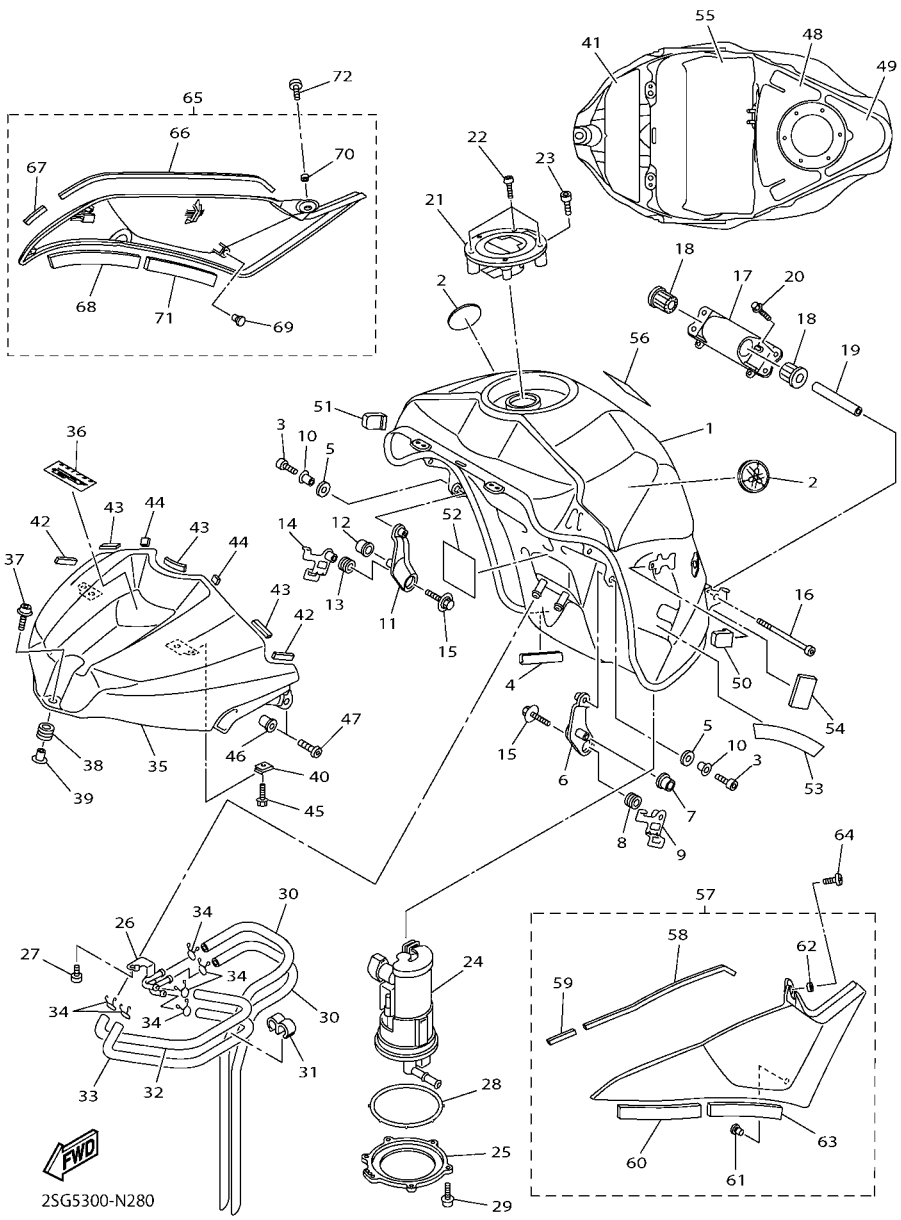

FIG. 28 DEPOSITO DE COMBUSTIBLE

REF. Nº	CODIGO Nº	DESCRIPCION	2SG5					OBSERVACIONES
1	14B–YK241–00–P2	DEPOSITO DE COMBUSTIBLE COMP.	1					DPBMC
2	5SL–2413B–00	EMBLEMA	2					
3	91312–06016	TORNILLO	2					
4	4BP–24188–00	MOLDURA DEPOSITO COMBUST.	1					
5	5VY–24183–00	AMORTIGUADOR DE MONTAJE 3	2					
6	14B–24191–10	SOPORTE DEPOSITO DE COMBUST.1	1					
7	5VY–24181–00	AMORTIGUADOR DE MONTAJE 1	1					
8	90480–10542	TAPON	1					
9	14B–21161–00	SOPORTE DE CABLE	1					
10	90387–06143	ESPACIADOR	2					
11	14B–24192–10	SOPORTE DE DEPOSITO COMBUST.2	1					
12	5VY–24181–00	AMORTIGUADOR DE MONTAJE 1	1					
13	90480–10542	TAPON	1					
14	14B–21162–00	SOPORTE DE CABLE DE EMBRAGUE	1					
15	90119–06262	TORNILLO CON ARANDELA	2					
16	90110–06378	TORNILLO ALLEN	1					
17	14B–2413Y–10	SOPORTE ACCESORIO DE DEPOSITO	1					
18	5SL–24183–00	AMORTIGUADOR DE MONTAJE 3	2					
19	90387–06055	ESPACIADOR	1					
20	90110–06163	TORNILLO ALLEN	4					
21	39P–24602–10	TAPON COMPLETO	1					
22	90110–05112	TORNILLO ALLEN	3					
23	91312–05010	TORNILLO	1					
24	14B–13907–20	BOMBA DE COMBUSTIBLE COMPLETA	1					
25	13S–24491–00	SOPORTE BOMBA COMBUSTIBLE	1					
26	14B–24135–00	GRAMPA 1	1					
27	90110–05030	TORNILLO ALLEN	1					

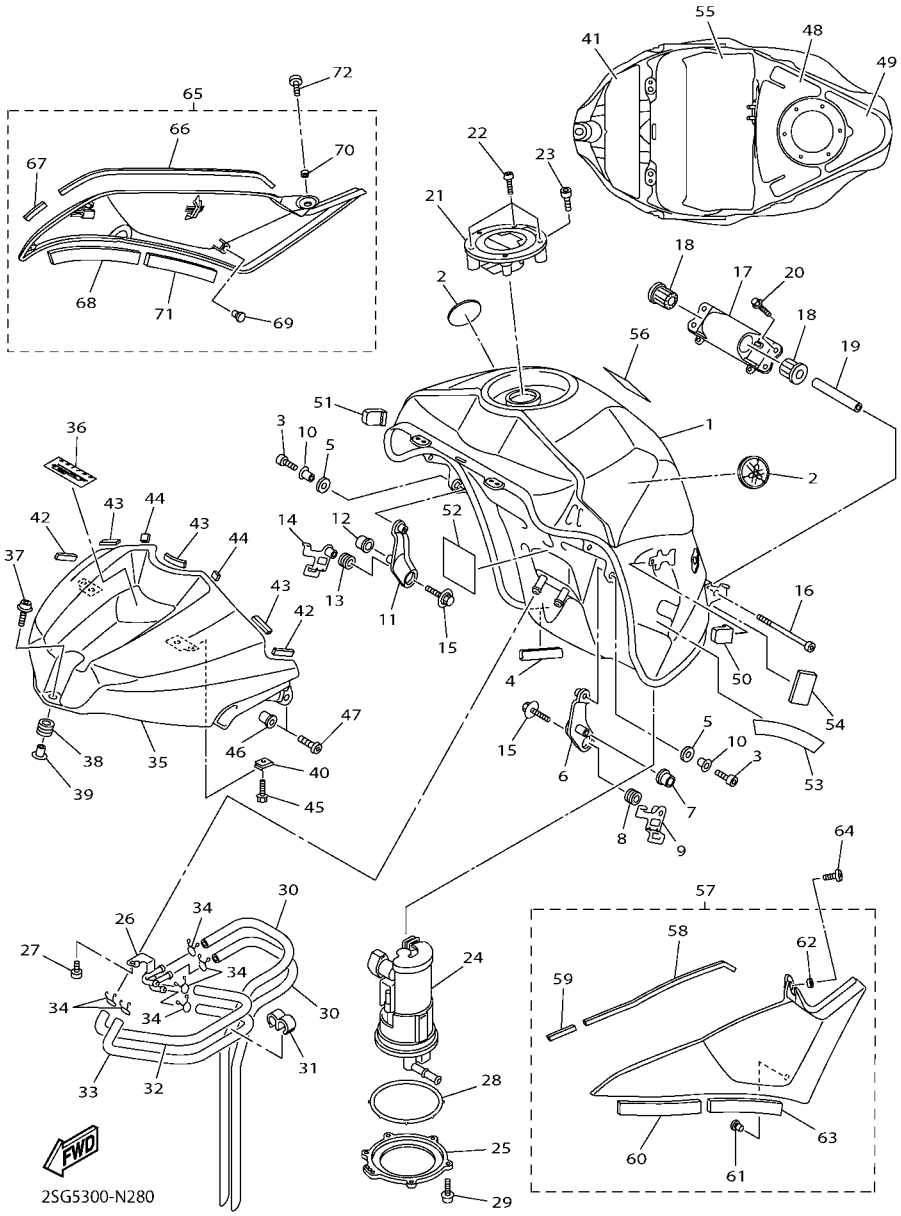

FIG. 28 DEPOSITO DE COMBUSTIBLE

REF. Nº	CODIGO Nº	DESCRIPCION	2SG5					OBSERVACIONES
28	19B–24486–01	ANILLO O	1					
29	90110–05028	TORNILLO ALLEN	6					
30	14B–24312–00	TUBO 2	2					
31	90464–09M31	BRIDA	1					
32	14B–24313–00	TUBO 3	1					
33	14B–24314–00	TUBO 4	1					
34	90467–09006	PRESILLA	6					
35	14B–2171A–00–P7	CUBIERTA, TECHO	1					DNMN
36	1RC–2416B–00	EMBLEMA	1					
37	90110–06233	TORNILLO ALLEN	1					
38	90480–12023	TAPON	1					
39	90387–06203	ESPACIADOR	1					
40	90183–05074	TUERCA DE RESORTE	2					
41	14B–2414H–00	EQUILIBRIO, CUBIERTA	1					
42	4C8–24182–00	AMORTIGUADOR DE MONTAJE 2	2					
43	3XV–21778–00	AMORTIGUADOR DE MONTAJE	3					
44	14B–24181–00	AMORTIGUADOR DE MONTAJE 1	2					
45	90119–05015	TORNILLO CON ARANDELA	2					
46	90179–05523	TUERCA	2					
47	98902–05014	TORNILLO DE LIGAR	2					
48	14B–2414N–20	EQUILIBRIO, CUBIERTA	1					
49	14B–2414P–20	EQUILIBRIO, CUBIERTA	1					
50	5PW–2411J–01	AMORTIGUADOR, DE CUBIERTA LAT	1					
51	5PW–2411J–01	AMORTIGUADOR, DE CUBIERTA LAT	1					
52	5VU–21747–00	AMORTIGUADOR	1					
53	14B–2414K–10	EQUILIBRIO, CUBIERTA 3	2					
54	14B–2414G–00	SELLO	2					

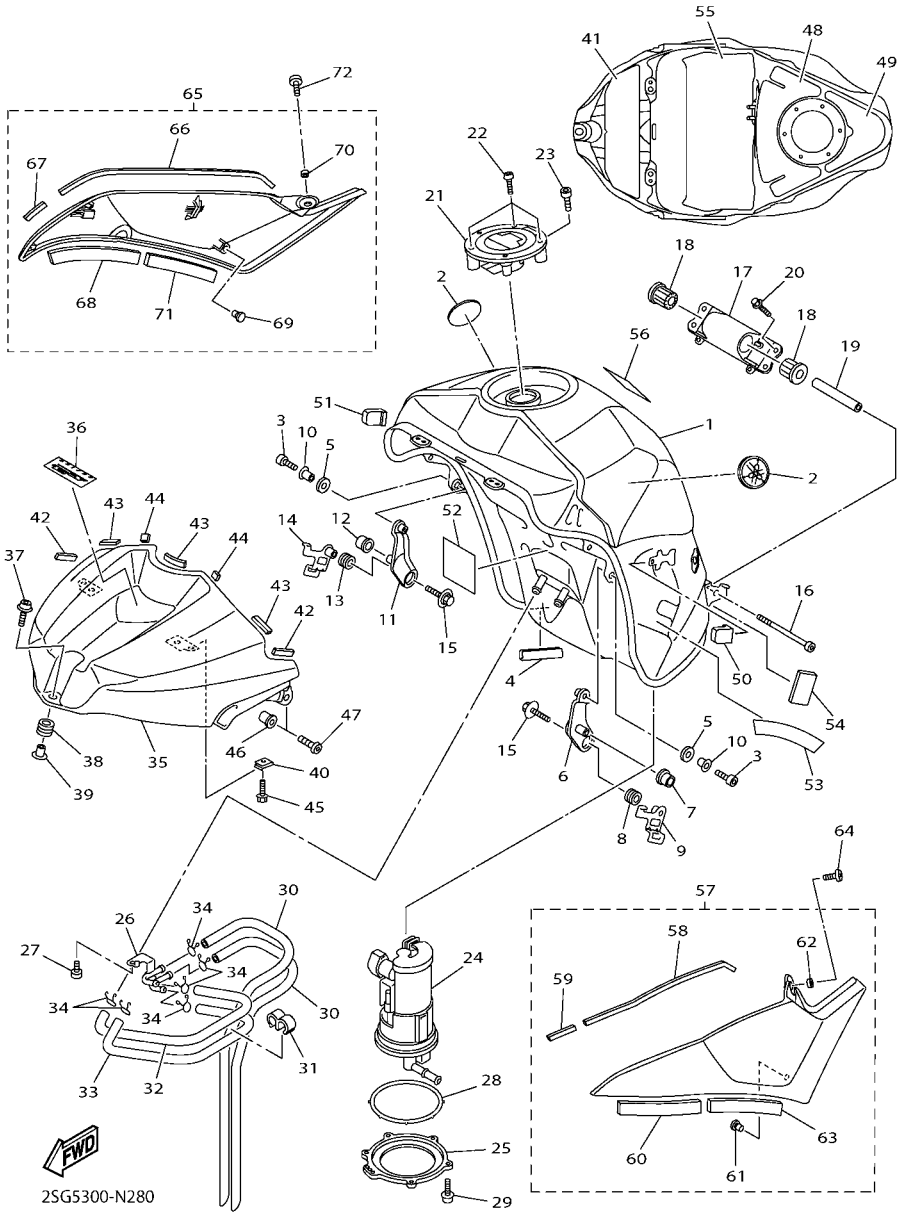

FIG. 28 DEPOSITO DE COMBUSTIBLE

REF. Nº	CODIGO Nº	DESCRIPCION	2SG5					OBSERVACIONES
55	90520–08002	EQUILIBRIO, CUBIERTA	1					
56	4C8–21568–01	ETIQUETA DE PRECAUCION	1					
57	14B–24106–10	CUBIERTA LATERAL COMPLETA 1	1					
58	2C0–2414H–00	.EQUILIBRIO, CUBIERTA	1					
59	14B–2414J–00	.EQUILIBRIO, CUBIERTA	1					
60	2C0–2414J–00	.EQUILIBRIO, CUBIERTA	1					
61	90338–06018	.TAPON	1					
62	90560–05N33	.SEPARADOR	1					
63	90520–10005	.EQUILIBRIO, CUBIERTA	1					
64	98902–05008	TORNILLO DE LIGAR	1					
65	14B–24108–10	CUBIERTA LATERAL COMPLETA 2	1					
66	2C0–2414H–00	.EQUILIBRIO, CUBIERTA	1					
67	14B–2414J–00	.EQUILIBRIO, CUBIERTA	1					
68	2C0–2414J–00	.EQUILIBRIO, CUBIERTA	1					
69	90338–06018	.TAPON	1					
70	90560–05N33	.SEPARADOR	1					
71	90520–10005	.EQUILIBRIO, CUBIERTA	1					
72	98902–05008	TORNILLO DE LIGAR	1					

FIG. 29 ASIENTO

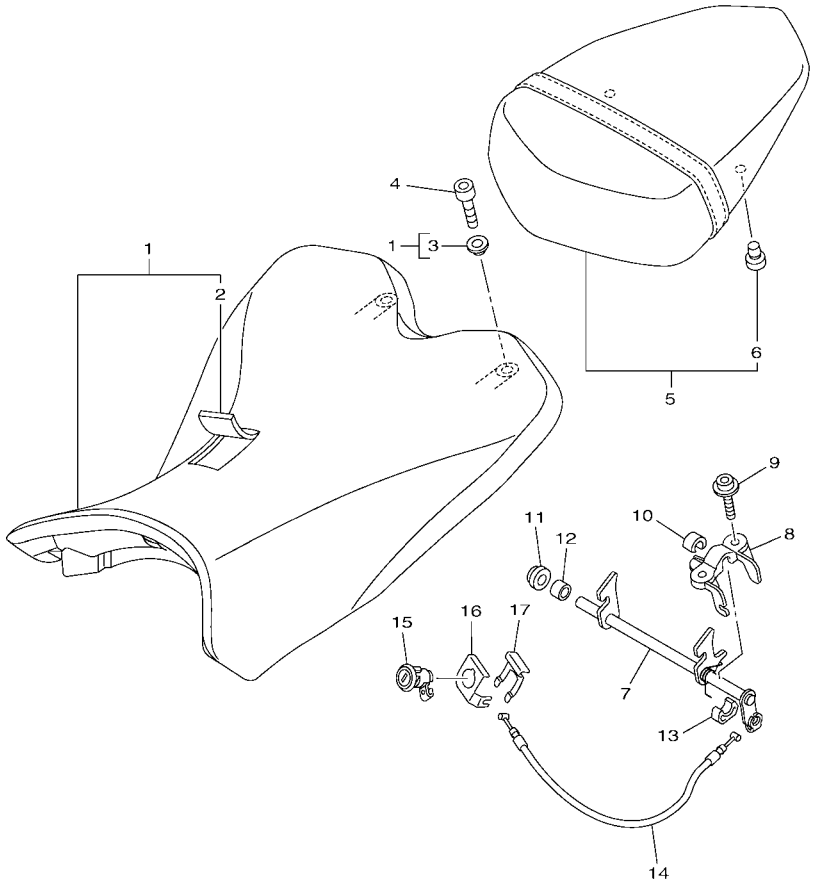

2SG1300-N290

REF. Nº	CODIGO Nº	DESCRIPCION	2SG5					OBSERVACIONES
1	14B–24710–00	ASIENTO SIMPLE COMPLETO	1					
2	14B–24711–00	.CUBIERTA DE ASIENTO SIMPLE	1					
3	90387–06066	.ESPACIADOR	2					
4	90110–06258	TORNILLO ALLEN	2					
5	14B–24750–00	ASIENTO TANDEM COMPLETO	1					
6	5SL–24723–00	.AMORTIGUADOR DE ASIENTO	2					
7	1KB–24780–00	CERRADURA SILLIN COMPLETO	1					
8	2C0–24792–00	PLACA	1					
9	90110–06163	TORNILLO ALLEN	2					
10	14B–24725–00	ESPACIADOR 1	1					
11	13S–24725–00	ESPACIADOR 1	1					
12	90560–08213	SEPARADOR	1					
13	13S–24847–00	SOSTEN	1					
14	14B–2478E–00	CABLE	1					
15	5VY–W2470–00	JUEGO DE ROTOR	1					
16	5VY–2117K–01	SOPORTE DE CERRADURA	1					
17	5VY–2176V–00	RESORTE, CERRADURA 2	1					

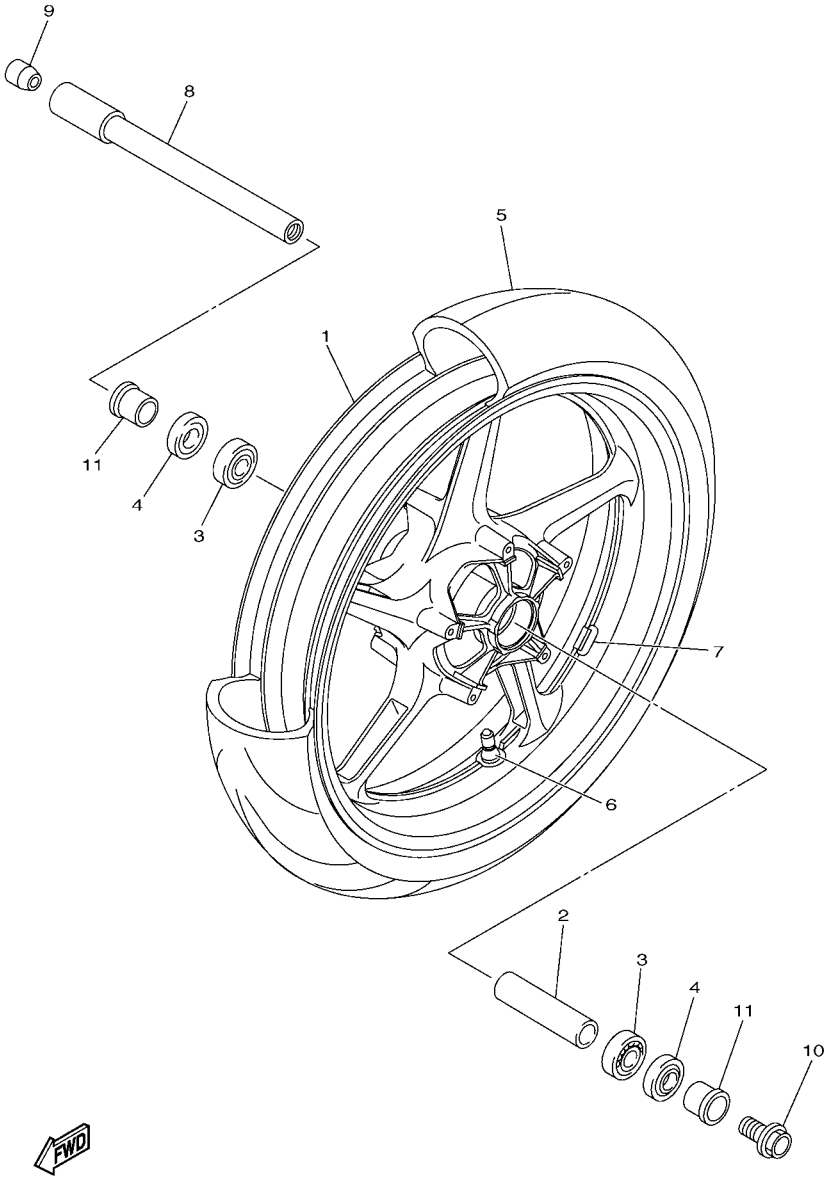

14BR300-K300

FIG. 30 RUEDA DELANTERA

REF. Nº	CODIGO Nº	DESCRIPCION	2SG5					OBSERVACIONES
1	1KB–25168–00–P0	RUEDA FUNDIDA DELANTERA	1					DPBM15
2	4XV–25117–00	ESPACIADOR DE COJINETE	1					
3	93306–07208	COJINETE	2					
4	93106–28043	SELLO ACEITE	2					
5	94112–17111	NEUMATICO(120/70 ZR17 M/C 58W)	1					UR DUNLOP
	*	NEUMATICO(120/70 ZR17 M/C 58W)	1					UR LM MICHELIN
6	93900–00030	VALVULA DE ARO (TR412)	1					TAIHEIYO
7	5MT–25398–00	BALANCEADOR DE RUEDA (10G)	1					UN
	5MT–25398–10	BALANCEADOR DE RUEDA (20G)	1					UN
	5MT–25398–20	BALANCEADOR DE RUEDA (30G)	1					UN
8	2C0–25181–00	EJE DE LA RUEDA	1					
9	5PW–25188–00	TAPA	1					
10	90105–14002	TORNILLO	1					
11	90387–22016	ESPACIADOR	2					

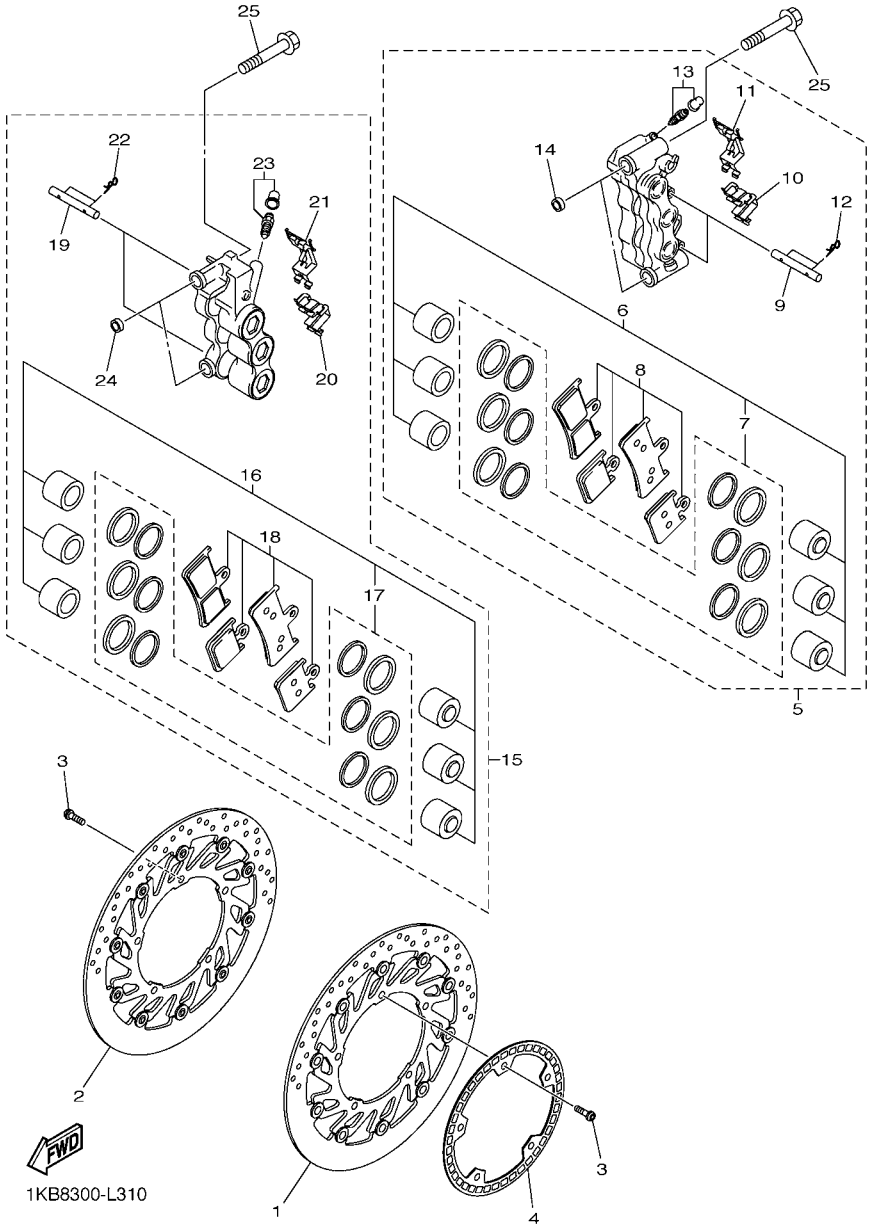

FIG. 31 CALIBRE FRENO DELANTERA

REF. Nº	CODIGO Nº	DESCRIPCION	2SG5					OBSERVACIONES
1	1KB–2581T–00	DISCO DE FRENO	1					
2	1KB–2581U–00	DISCO DE FRENO (DERECO)	1					
3	90149–06043	TORNILLO DE REGLAJE	10					
4	1KB–2517G–00	ROTOR DE SENSOR	1					
5	4C8–2580T–10	CALIBRE COMPLETO (IZQUIERDO)	1					
6	4C8–25802–00	.PISTON COMPLETO PINZA	1					
7	4C8–25803–00	..JUEGO DE RETENES DE PINZA	1					
8	4C8–25805–00	.JUEGO DE COJIN DE FRENO	1					
9	4SV–25924–00	.PASADOR	2					
10	4C8–25919–00	.SOPORTE DE PASTILLAS	1					
11	2S3–25919–10	.SOPORTE DE PASTILLAS	1					
12	3GM–25925–00	.PRESILLA	4					
13	1J3–W0048–00	.CJTO TORNILLO DE PURGA	1					
14	5VY–2583B–00	.PASADOR DE PERILLA	2					
15	4C8–2580U–10	CALIBRE COMPLETO (DERECHO)	1					
16	4C8–25802–00	.PISTON COMPLETO PINZA	1					
17	4C8–25803–00	..JUEGO DE RETENES DE PINZA	1					
18	4C8–25805–00	.JUEGO DE COJIN DE FRENO	1					
19	4SV–25924–00	.PASADOR	2					
20	4C8–25919–00	.SOPORTE DE PASTILLAS	1					
21	2S3–25919–10	.SOPORTE DE PASTILLAS	1					
22	3GM–25925–00	.PRESILLA	4					
23	1J3–W0048–00	.CJTO TORNILLO DE PURGA	1					
24	5VY–2583B–00	.PASADOR DE PERILLA	2					
25	90105–10397	TORNILLO	4					

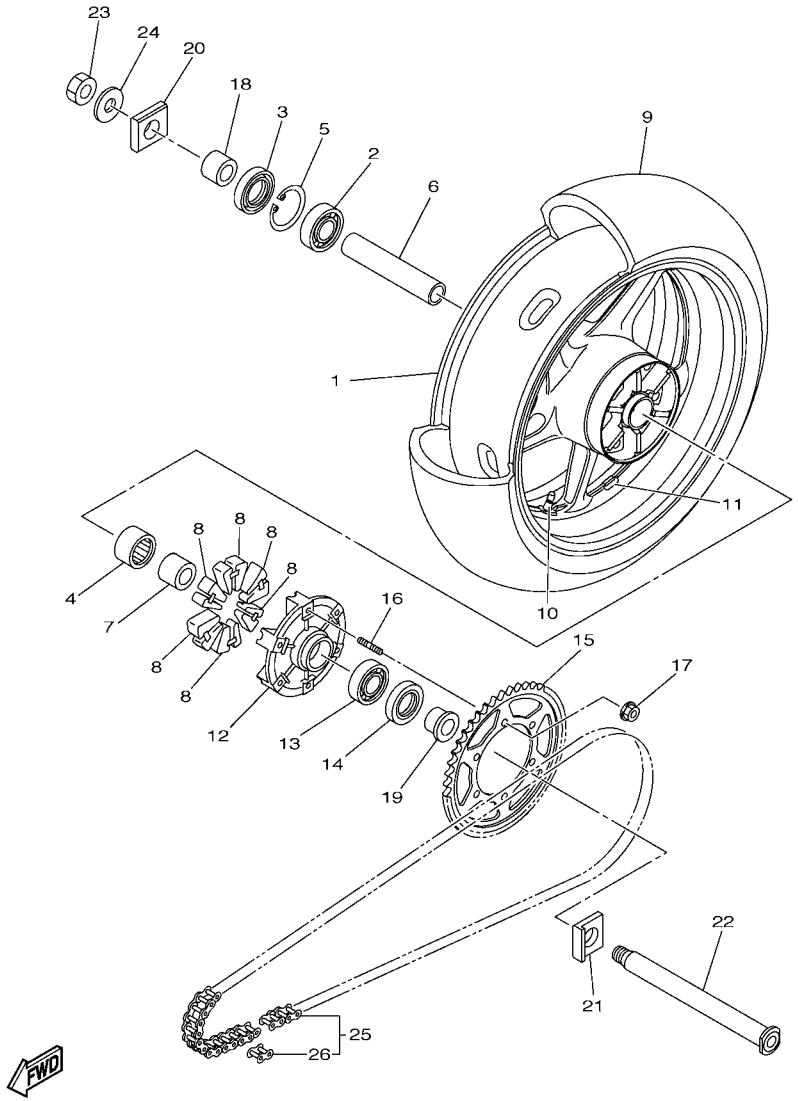

FIG. 32 RUEDA TRASERA

REF. Nº	CODIGO Nº	DESCRIPCION	2SG5					OBSERVACIONES
1	5VY–25338–00–P4	RUEDA FUNDIDA TRASERA	1					DPBM15
2	93306–20531	COJINETE	1					
3	93106–40013	SELLO ACEITE	1					
4	93317–43580	COJINETE	1					
5	93420–61M07	SEGURO	1					
6	5PW–25317–00	ESPACIADOR DE COJINETE	1					
7	4XV–25383–00	COLLAR DE RUEDA	1					
8	2C0–25364–00	AMORTIGUADOR	6					
9	94119–17072	NEUMATICO(190/55 ZR17 M/C 75W)	1					UR DUNLOP
	*	NEUMATICO(190/55 ZR17 M/C 75W)	1					UR LM MICHELIN
10	93900–00030	VALVULA DE ARO (TR412)	1					TAIHEIYO
11	5MT–25398–00	BALANCEADOR DE RUEDA (10G)	1					UN
	5MT–25398–10	BALANCEADOR DE RUEDA (20G)	1					UN
	5MT–25398–20	BALANCEADOR DE RUEDA (30G)	1					UN
12	5JJ–25366–00	EMBRAGUE DE MASA	1					
13	93306–20531	COJINETE	1					
14	93106–40013	SELLO ACEITE	1					
15	14B–25447–20	CORONA (47T)	1					
16	90116–10048	ESPARRAGO	6					
17	90185–10011	TUERCA AUTOBLOCANTE	6					
18	90387–28016	ESPACIADOR	1					
19	90387–28019	ESPACIADOR	1					
20	5VY–25388–00	TIRADOR DE CADENA 1	1					
21	5VY–25389–01	TIRADOR DE CADENA 2	1					
22	4C8–25381–00	EJE DE RUEDA	1					
23	90185–24007	TUERCA AUTOBLOCANTE	1					
24	90201–25020	ARANDELA PLANA	1					

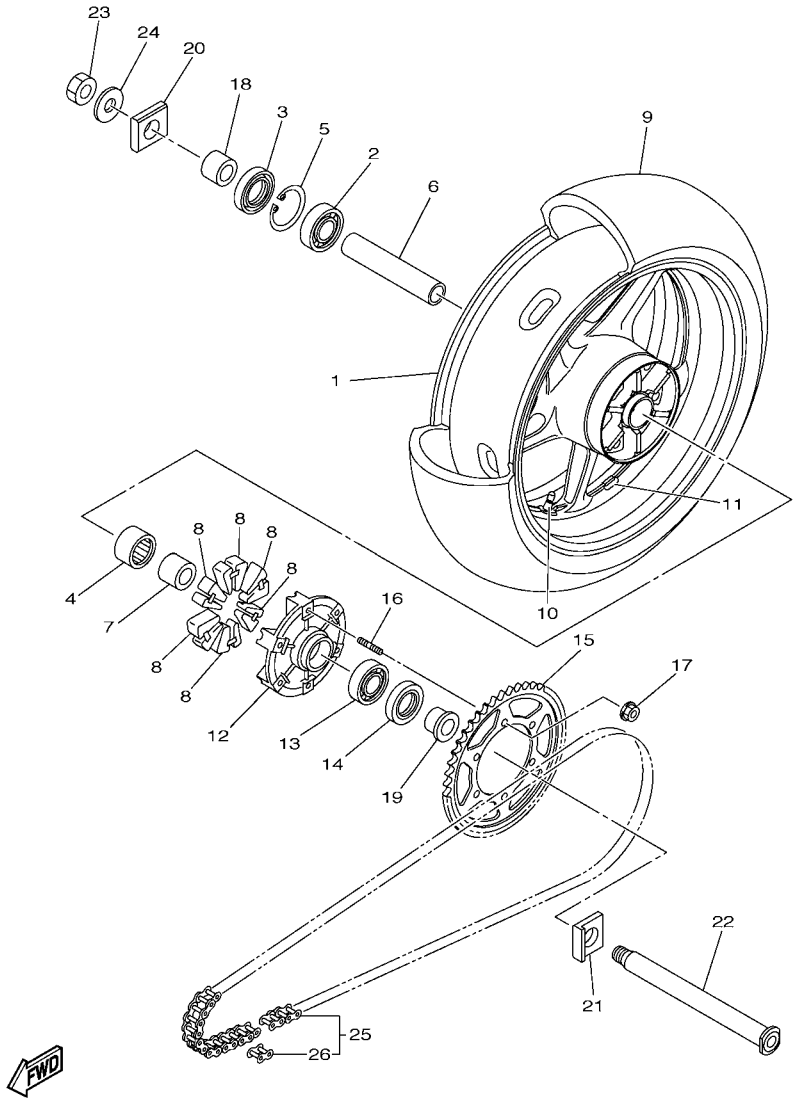

FIG. 32 RUEDA TRASERA

REF. Nº	CODIGO Nº	DESCRIPCION	2SG5					OBSERVACIONES
25	94582–30120	CADENA (DID 50VAZ-120LL)	1					
26	94682–30031	.JUNTA, DE CADENA(DID50VAZ-ZJ)	1					

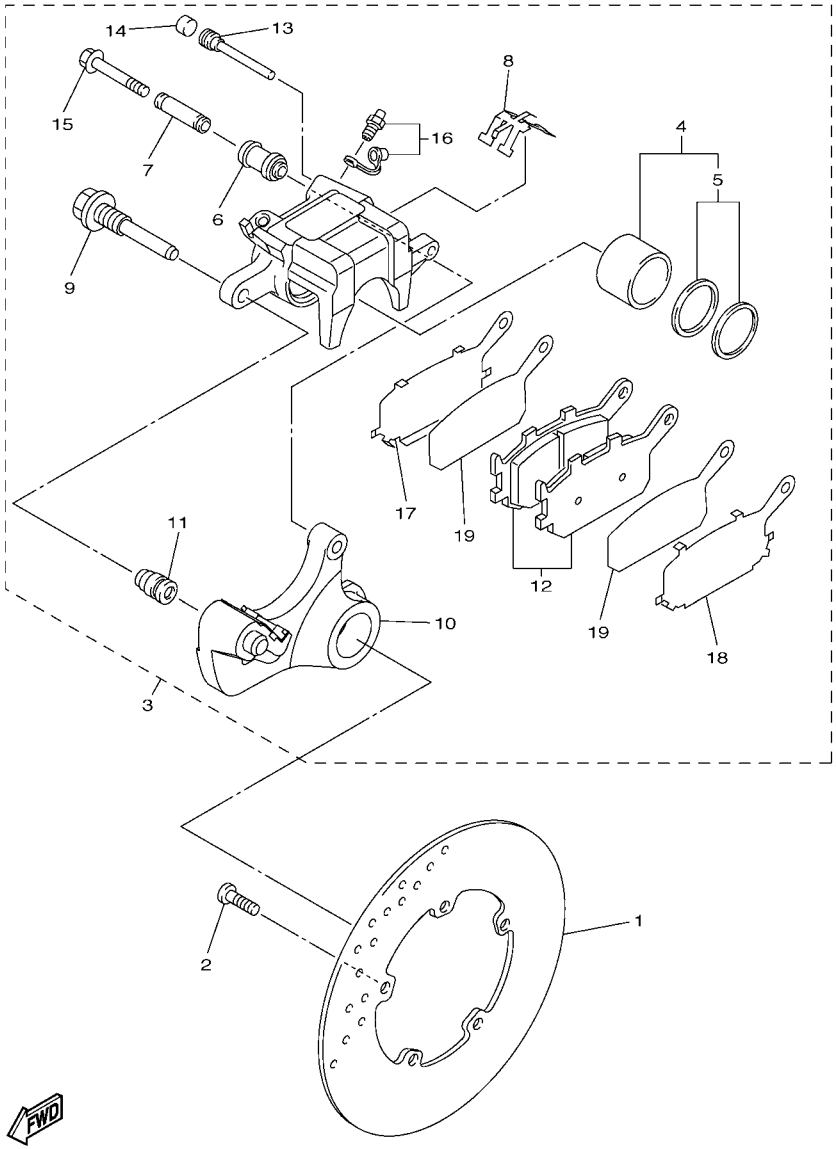

14B1300-H330

FIG. 33 CALIBRE FRENO TRASERA

REF. Nº	CODIGO Nº	DESCRIPCION	2SG5					OBSERVACIONES
1	5SL–2582W–00	DISCO DE FRENO TRASEROS 2	1					
2	90149–08009	TORNILLO DE REGLAJE	5					
3	5VY–2580W–12	CALIBRE COMPLETO TRASEROS 2	1					
4	5VY–W0057–00	.PISTON COMPLETO PINZA	1					
5	5SL–W0047–00	..JUEGO DE RETENES DE PINZA	1					
6	5SL–25917–00	.FUNDA DE CALIBRE	1					
7	5SL–25838–00	.CASQUILLO DE CALIBRE	1					
8	5SL–25919–00	.SOPORTE DE PASTILLAS	1					
9	5SL–25914–00	.PASADOR	1					
10	5VY–25921–01	.MENSULA DE SOPORTE	1					
11	3JD–25917–00	.FUNDA DE CALIBRE	1					
12	5VX–W0046–00	.JUEGO DE PASTILLAS DE FRENO 2	1					
13	8CR–25924–00	.PASADOR	1					
14	5DH–25916–00	.TAPON	1					
15	5SL–25926–00	.PERNO	1					
16	1UY–W0048–00	.CJTO TORNILLO DE PURGA	1					
17	5SL–25827–00	.CUNA DE CALIBRE	1					
18	5SL–25827–10	.CUNA DE CALIBRE	1					
19	5SL–25828–01	.CUNA DE CALIBRE	2					

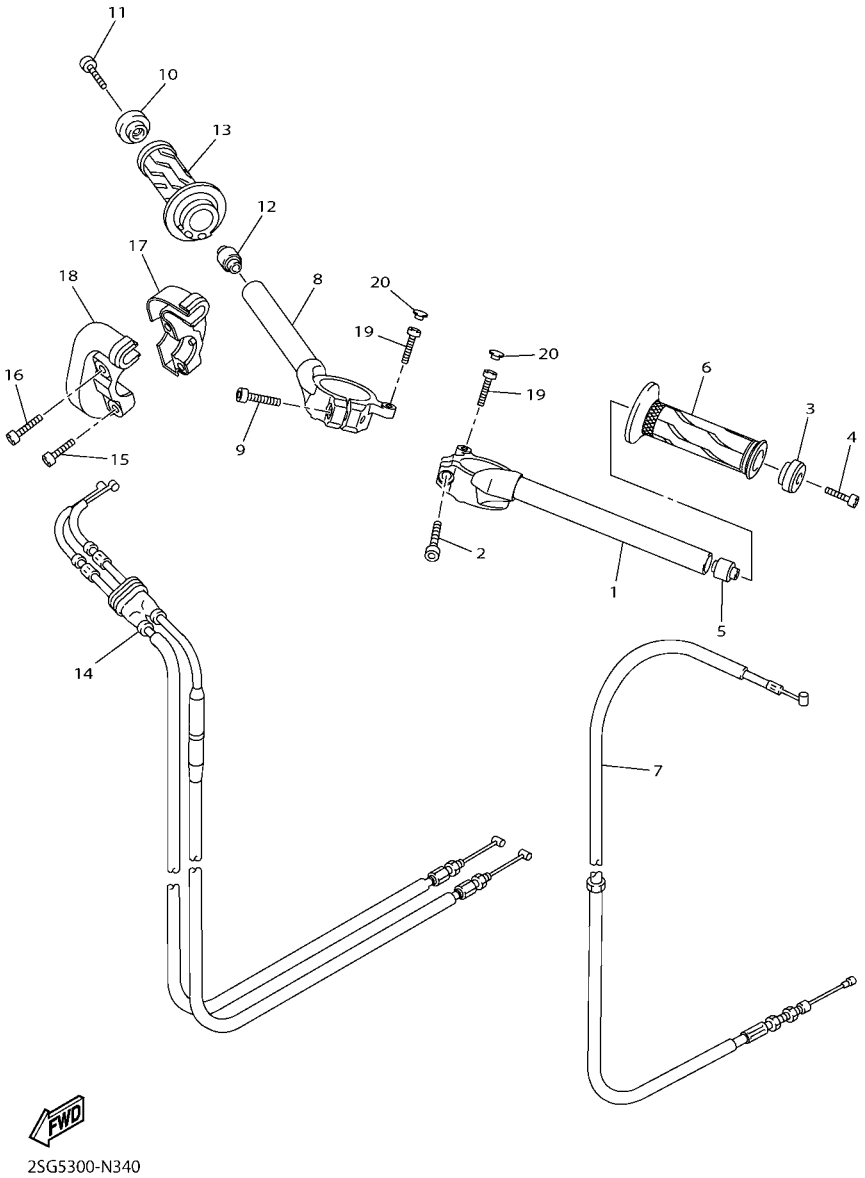

FIG. 34 MANILLAR & CABLE

REF. Nº	CODIGO Nº	DESCRIPCION	2SG5					OBSERVACIONES
1	14B–26121–00	MANUBRIO (MI)	1					
2	91314–08025	TORNILLO ALLEN	1					
3	5PW–26246–10	EXTREMO DE EMPUNADURA	1					
4	91317–06025	PERNO	1					
5	4XV–23434–00	SOPORTE DE AMORTIGUADOR	1					
6	2C0–26241–00	EMPUNADURA	1					
7	1KB–26335–00	CABLE DE EMBRAGUE	1					
8	14B–26122–00	MANUBRIO (MD)	1					
9	91314–08025	TORNILLO ALLEN	1					
10	5PW–26246–10	EXTREMO DE EMPUNADURA	1					
11	91317–06025	PERNO	1					
12	4XV–23434–00	SOPORTE DE AMORTIGUADOR	1					
13	4C8–26240–00	EMPUNADURA COMPLETA	1					
14	14B–26302–01	CABLE DE ACELERADOR COMPLETO	1					
15	91317–05020	PERNO	1					
16	91317–05025	PERNO	1					
17	3LN–26281–01	TAPA DE EMPUNADURA SUPERIOR	1					
18	3LN–26282–01	TAPA, EMPUNADURA INFERIOR	1					
19	91312–06025	TORNILLO	2					
20	90338–05010	TAPON	2					

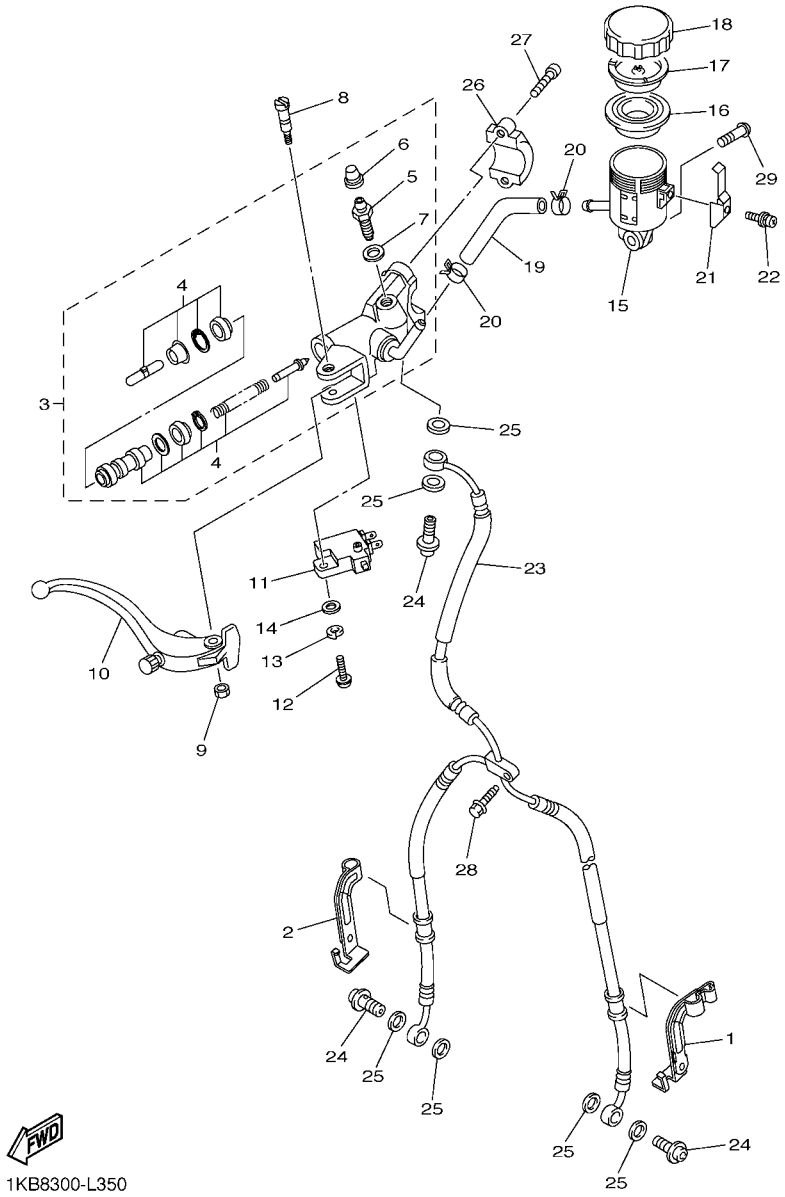

FIG. 35 CILINDRO MAESTRO DELANTERO

REF. Nº	CODIGO Nº	DESCRIPCION	2SG5					OBSERVACIONES
1	1KB–25875–00	SOPORTE DE MANGUERA FRENO 1	1					
2	14B–25876–00	SOPORTE DE MANGUERA FRENO 2	1					
3	14B–W2587–00	CILINDRO MAESTRO SUB COMPLET	1					
4	2S3–W0041–00	.JUEGO DE CILINDRO MAESTRO	1					
5	3YK–25824–00	.TORNILLO DE RESPIRADERO	1					
6	3YK–25825–00	.TAPA	1					
7	5VY–25975–00	.SELLO 1	1					
8	5VY–2589F–01	PERNO DE PALANCA	1					
9	95617–06100	TUERCA U	1					
10	14B–83922–00	PALANCA 2	1					
11	4HM–83980–00	INTERRUP. DE PARADA DELANTERO	1					
12	98502–04012	TORNILLO	1					
13	92902–04100	ARANDELA	1					
14	92902–04600	ARANDELA	1					
15	5SL–25894–20	TANQUE DE RESERVA	1					
16	5VY–25854–00	EMPAQUE,DIAFRAGMA	1					
17	5VY–25855–00	BUJE DE DIAFRAGMA	1					
18	5VY–25852–00	TAPA DE TANQUE DE RESERVA	1					
19	5VY–25895–10	MANGUERA DE TANQUE DE RESERVA	1					
20	90467–120A3	PRESILLA	2					
21	5VY–2589G–00	SOPORTE	1					
22	5VY–2589H–00	TORNILLO	1					
23	1KB–25872–00	MANGUERA DE FRENO 1	1					
24	90401–10172	PERNO DE UNION	3					
25	90430–10005	JUNTA	6					
26	5VS–25867–00	SOPORTE DE CILINDRO MAESTRO	1					
27	91317–06020	PERNO	2					

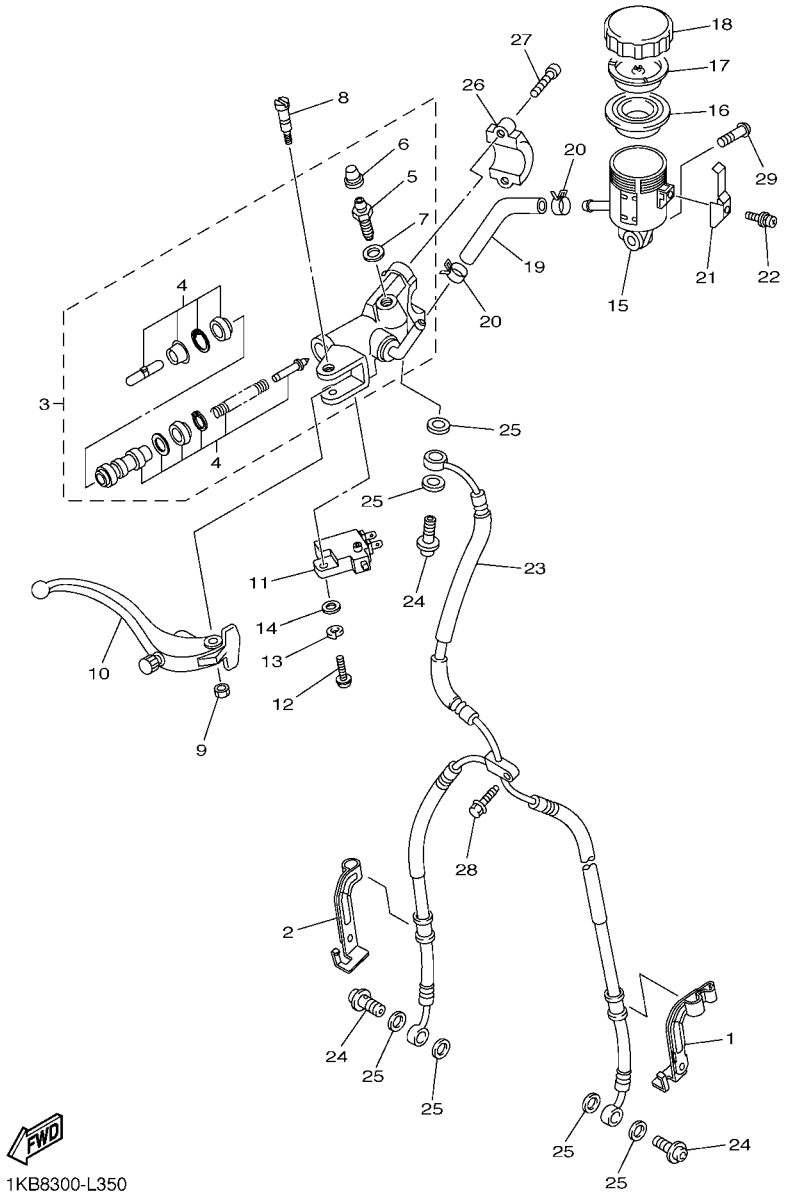

FIG. 35 CILINDRO MAESTRO DELANTERO

REF. Nº	CODIGO Nº	DESCRIPCION	2SG5					OBSERVACIONES
28	90105–06041	TORNILLO	1					
29	90111–05026	TORNILLO	1					

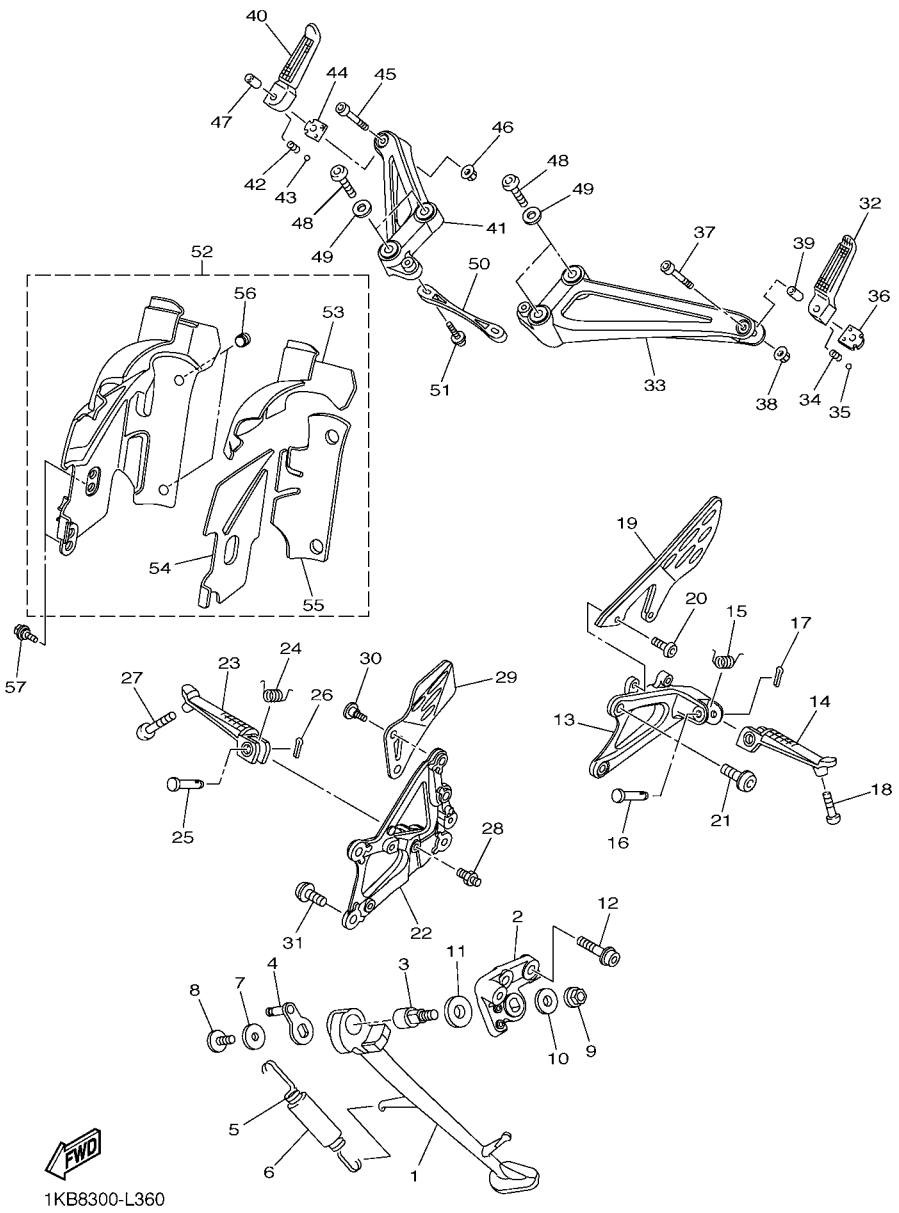

FIG. 36 SOPORTE & APOYAPIE

REF. Nº	CODIGO Nº	DESCRIPCION	2SG5					OBSERVACIONES
1	14B–27311–00	PUNTAL LATERAL	1					
2	14B–27321–00	SOPORTE DE PUNTAL LATERAL	1					
3	14B–27351–00	GUIA DE PUNTAL LATERAL	1					
4	14B–27352–00	GANCHO DE PUNTAL LATERAL	1					
5	90506–18008	RESORTE DE TENSION	1					
6	90445–19002	TUBO (L60)	1					
7	90201–081R9	ARANDELA PLANA	1					
8	90111–08073	TORNILLO	1					
9	95602–10200	TUERCA DE AUTO-CIERRE	1					
10	90201–10035	ARANDELA PLANA	1					
11	90201–146F9	ARANDELA PLANA	1					
12	90110–10025	TORNILLO ALLEN	2					
13	14B–27442–10	SOPORTE 2	1					
14	1KB–27451–00	APOYAPIE	1					
15	90508–18134	RESORTE DE TORSION	1					
16	90240–08084	PASADOR CON HOYO	1					
17	91401–25015	CHAVETA	1					
18	90109–08174	PERNO	1					
19	14B–27445–10	PLACE 1	1					
20	90111–06003	TORNILLO	2					
21	90109–085G6	PERNO	2					
22	14B–27443–10	SOPORTE 3	1					
23	1KB–27461–00	APOYAPIE	1					
24	90508–18135	RESORTE DE TORSION	1					
25	90240–08084	PASADOR CON HOYO	1					
26	91401–25015	CHAVETA	1					
27	90109–08174	PERNO	1					

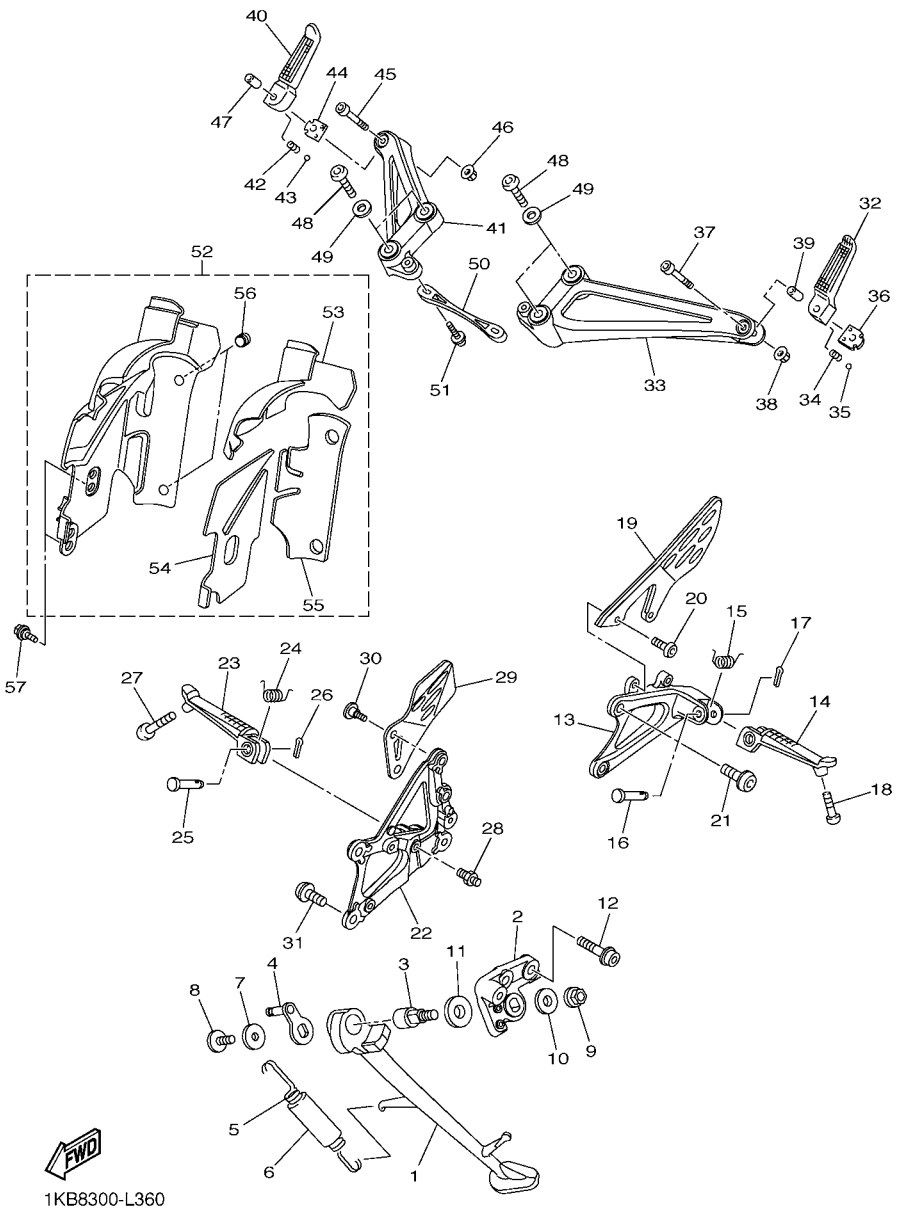

FIG. 36 SOPORTE & APOYAPIE

REF. Nº	CODIGO Nº	DESCRIPCION	2SG5					OBSERVACIONES
28	4C8–27813–00	PASADOR MANIVELA DE PEDAL	1					
29	14B–27446–10	PLACE 2	1					
30	90109–066F0	PERNO	2					
31	90109–085G6	PERNO	2					
32	5JJ–27431–10	APOYAPIE POSTERIOR 1	1					
33	14B–2741L–10	MENSULA 4	1					
34	90501–12743	RESORTE DE COMPRESION	1					
35	93501–04011	BOLA	1					
36	5JJ–27437–01	ARANDELA ESPECIAL	1					
37	91312–06035	TORNILLO	1					
38	95602–06200	TUERCA DE AUTO-CIERRE	1					
39	90387–06697	ESPACIADOR	1					
40	5JJ–27441–10	APOYAPIE POSTERIOR 2	1					
41	14B–2742L–10	MENSULA 5	1					
42	90501–12743	RESORTE DE COMPRESION	1					
43	93501–04011	BOLA	1					
44	5JJ–27437–01	ARANDELA ESPECIAL	1					
45	91312–06035	TORNILLO	1					
46	95602–06200	TUERCA DE AUTO-CIERRE	1					
47	90387–06697	ESPACIADOR	1					
48	90111–08066	TORNILLO	4					
49	13S–27417–00	ARANDELA DE APOYAPIE	4					
50	14B–27469–00	REFUERZO 1	1					
51	90109–06031	PERNO	2					
52	14B–27490–00	PROTECTOR COMPL.	1					
53	14B–2749A–00	.ASIENTO 3	1					
54	14B–2749B–00	.ASIENTO4	1					

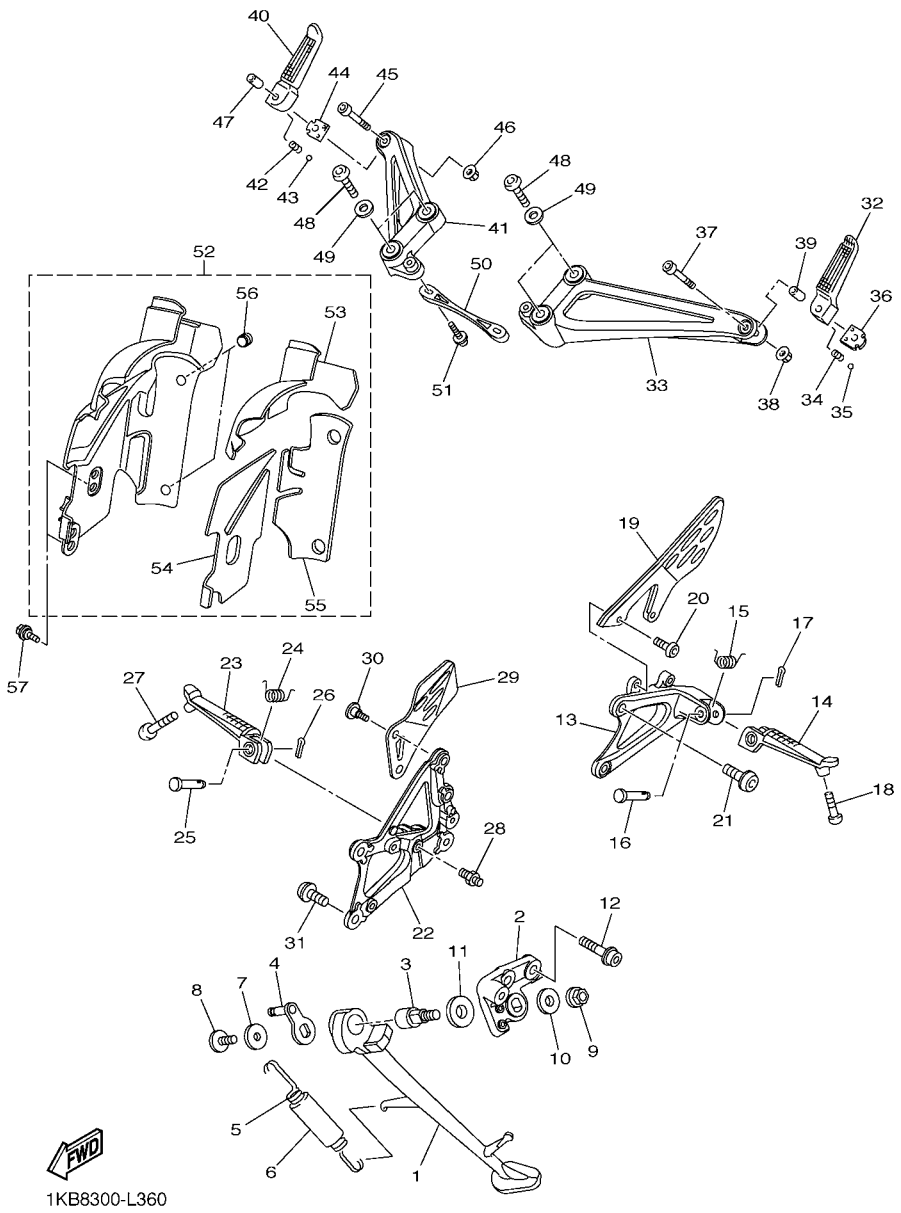

FIG. 36 SOPORTE & APOYAPIE

REF. Nº	CODIGO Nº	DESCRIPCION	2SG5					OBSERVACIONES
55	14B–2749D–00	.ASIENTO 6	1					
56	2D1–14737–00	.AMORTIGUADOR DE SILENCIADOR	2					
57	90109–06264	PERNO	2					

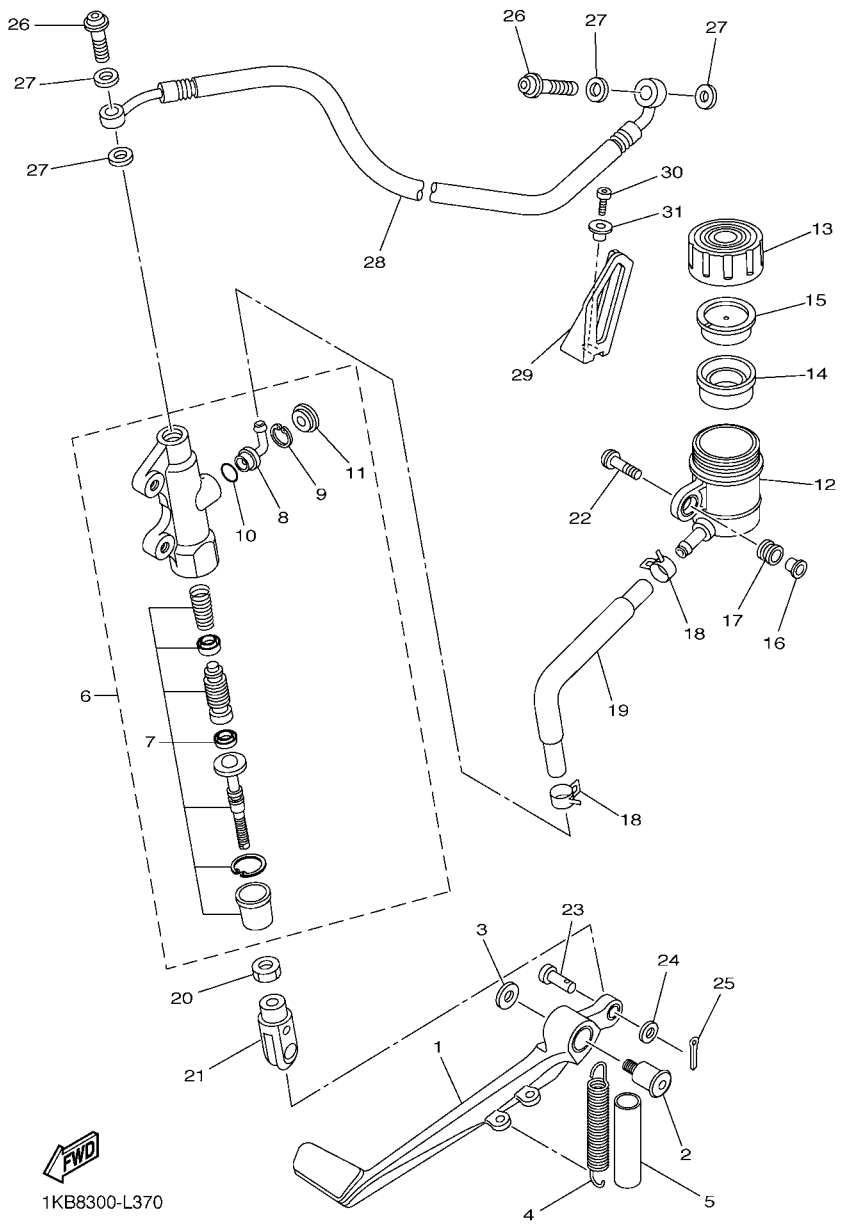

FIG. 37 CILINDRO MAESTRO TRASERO

REF. Nº	CODIGO Nº	DESCRIPCION	2SG5					OBSERVACIONES
1	14B–27211–00	PEDAL DE FRENO	1					
2	4C8–27434–00	PERNO	1					
3	90201–08103	ARANDELA PLANA	1					
4	90506–18022	RESORTE DE TENSION	1					
5	90446–15386	TUBO RESEIRADERO	1					
6	14B–2583V–00	CILINDRO, MAESTRO TRASERO	1					
7	14B–W0042–00	.JUEGO DE CILINDRO MAESTRO	1					
8	4ML–2582A–50	.CONECTOR	1					
9	2VN–25866–00	.PRESILLA REDONDA	1					
10	93210–15620	.ANILLO O	1					
11	3FV–2589A–00	.CUBIERTA PARA POLVO	1					
12	14B–25894–00	TANQUE DE RESERVA	1					
13	2C0–25852–00	TAPA DE TANQUE DE RESERVA	1					
14	2VN–25854–00	EMPAQUE,DIAFRAGMA	1					
15	2VN–25855–00	BUJE DE DIAFRAGMA	1					
16	90387–05028	ESPACIADOR	1					
17	2C0–26326–00	TAPON PROTECTOR	1					
18	90467–12085	PRESILLA	2					
19	14B–25895–00	MANGUERA DE TANQUE DE RESERVA	1					
20	95307–08700	TUERCA	1					
21	4XV–27222–01	UNION	1					
22	90111–05026	TORNILLO	1					
23	91702–06018	PASADOR DE ADRAZADERA	1					
24	92902–06200	ARANDELA	1					
25	91402–16012	CHAVETA	1					
26	90401–10172	PERNO DE UNION	2					
27	90430–10005	JUNTA	4					

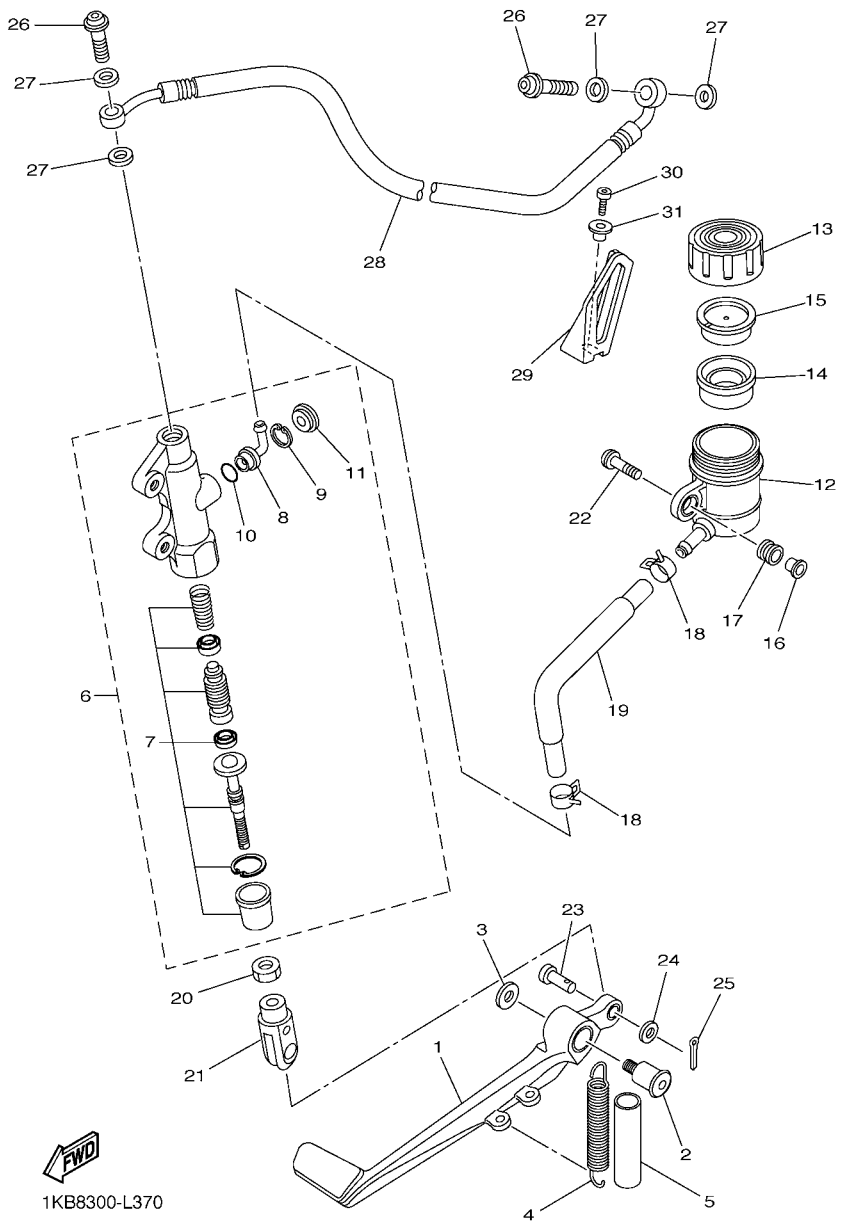

FIG. 37 CILINDRO MAESTRO TRASERO

REF. Nº	CODIGO Nº	DESCRIPCION	2SG5					OBSERVACIONES
28	1KB–25874–00	MANGUERA DE FRENO	1					
29	1KB–2588F–00	SOPORTE DE MANGUERA FRENO 5	1					
30	91314–06016	TORNILLO ALLEN	1					
31	90387–06066	ESPACIADOR	1					

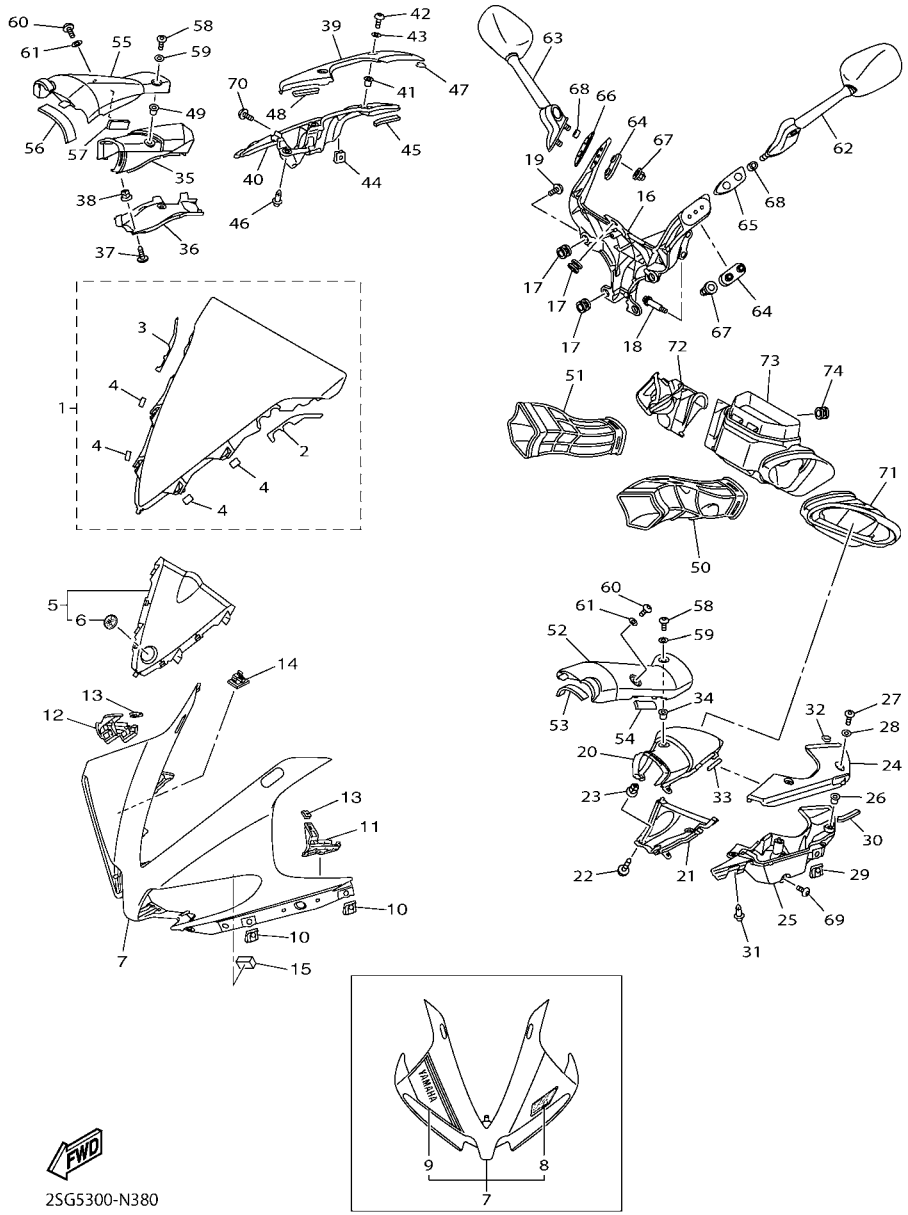

FIG. 38 BOVEDA 1

REF. Nº	CODIGO Nº	DESCRIPCION	2SG5					OBSERVACIONES
1	14B–28380–30	VISERA COMPLETO	1					
2	14B–28428–10	.SELLO 1	1					
3	14B–28429–10	.SELLO 2	1					
4	4C8–21735–00	.SELLO 2	4					
5	1KB–2830P–00	REFLECTOR	1					
6	4KN–2836B–10	.MARCA	1					
7	1KB–W283G–80–P6	CARROCERIA DELANT SUP 1	1					DNMN
8	2SG–28328–20	.EMBLEMA	1					
9	2SG–2832L–20	.GRAFICO 13	1					
10	5PW–2177L–00	PLACA DE RESORTE	4					
11	1KB–2831U–00	APOYO 1	1					
12	1KB–2832U–00	APOYO 1	1					
13	90183–05076	TUERCA DE RESORTE	2					
14	90464–16020	BRIDA	1					
15	90520–15010	EQUILIBRIO, CUBIERTA	2					
16	14B–28356–10	SOPORTE 1	1					
17	4XV–83513–00	AMORTIGUADOR	7					
18	90105–08052	TORNILLO	2					
19	90160–05006	TORNILLO REDONDO ROSCA HEMBRA	4					
20	14B–2838N–00–P5	CONDUCTO 1	1					MBL2
21	14B–2838T–00	CONDUCTO 3	1					
22	97702–50012	TORNILLO ROSCA HEMBRA	2					
23	90480–08005	TAPON	2					
24	14B–2839K–00–P5	TAPA 1	1					MBL2
25	14B–2838V–00	CAJA 3	1					
26	90179–05523	TUERCA	2					
27	90111–05034	TORNILLO	2					

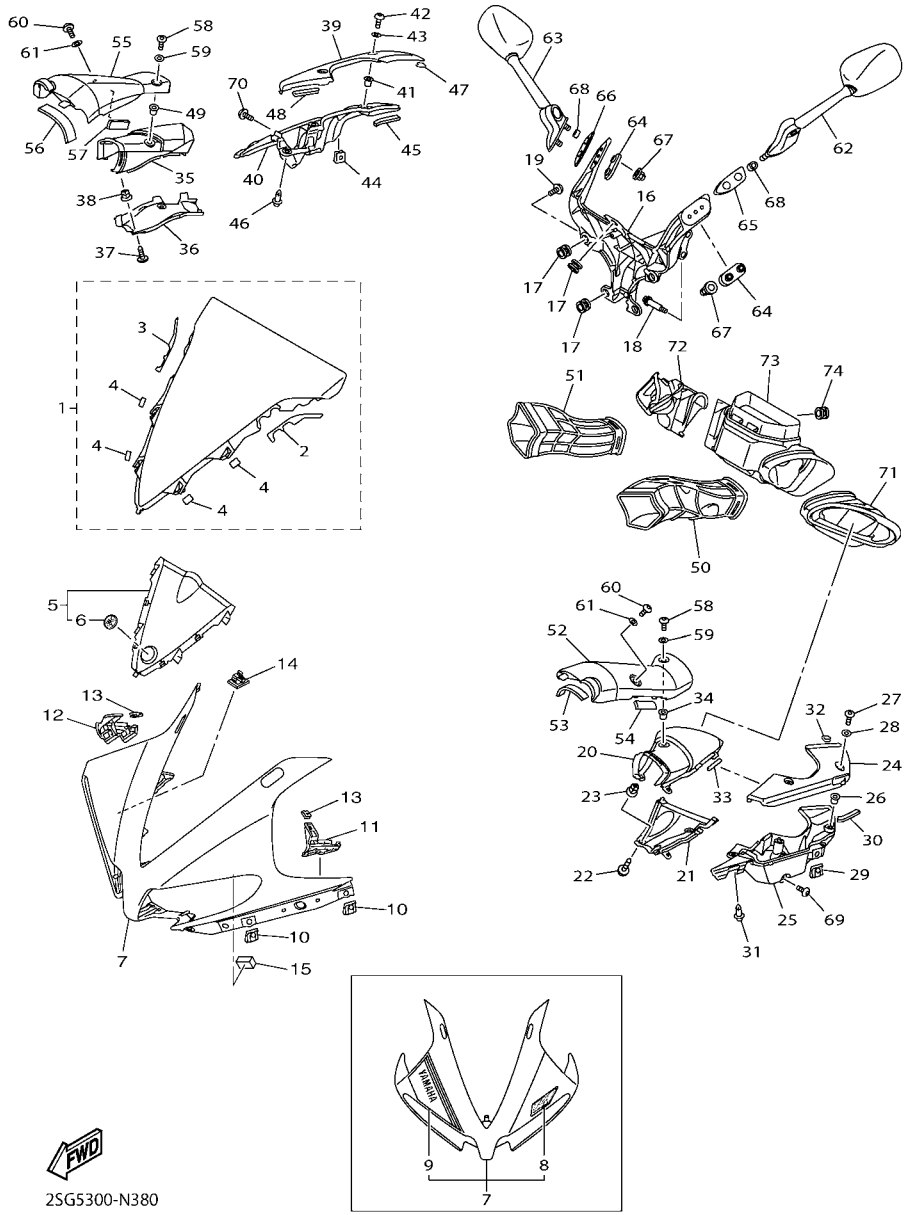

FIG. 38 BOVEDA 1

REF. Nº	CODIGO Nº	DESCRIPCION	2SG5					OBSERVACIONES
28	90202–05180	ARANDELA DE PLANA	2					
29	5PW–2177L–00	PLACA DE RESORTE	1					
30	J44–78248–00	SELLO 4	1					
31	90269–07077	REMACHE	1					
32	90520–01001	EQUILIBRIO, CUBIERTA	1					
33	90520–03005	EQUILIBRIO, CUBIERTA	1					
34	90179–05523	TUERCA	1					
35	14B–2838R–00–P5	CONDUCTO 2	1					MBL2
36	14B–2838U–00	CONDUCTO 4	1					
37	97702–50012	TORNILLO ROSCA HEMBRA	2					
38	90480–08005	TAPON	2					
39	14B–2839L–00–P5	TAPA 2	1					MBL2
40	14B–2838W–00	CAJA 4	1					
41	90179–05523	TUERCA	2					
42	90111–05034	TORNILLO	2					
43	90202–05180	ARANDELA DE PLANA	2					
44	5PW–2177L–00	PLACA DE RESORTE	1					
45	J44–78248–00	SELLO 4	1					
46	90269–07077	REMACHE	1					
47	90520–01001	EQUILIBRIO, CUBIERTA	1					
48	90520–03005	EQUILIBRIO, CUBIERTA	1					
49	90179–05523	TUERCA	1					
50	14B–2838J–00	CONDUCT0 5	1					
51	14B–2838P–00	CONDUCT0 6	1					
52	14B–2837L–00–P5	PANEL DE CONSOLA	1					MBL2
53	4C8–2112D–00	AMORTIGUADOR 3	1					
54	2S3–2111D–00	SELLO 1	1					

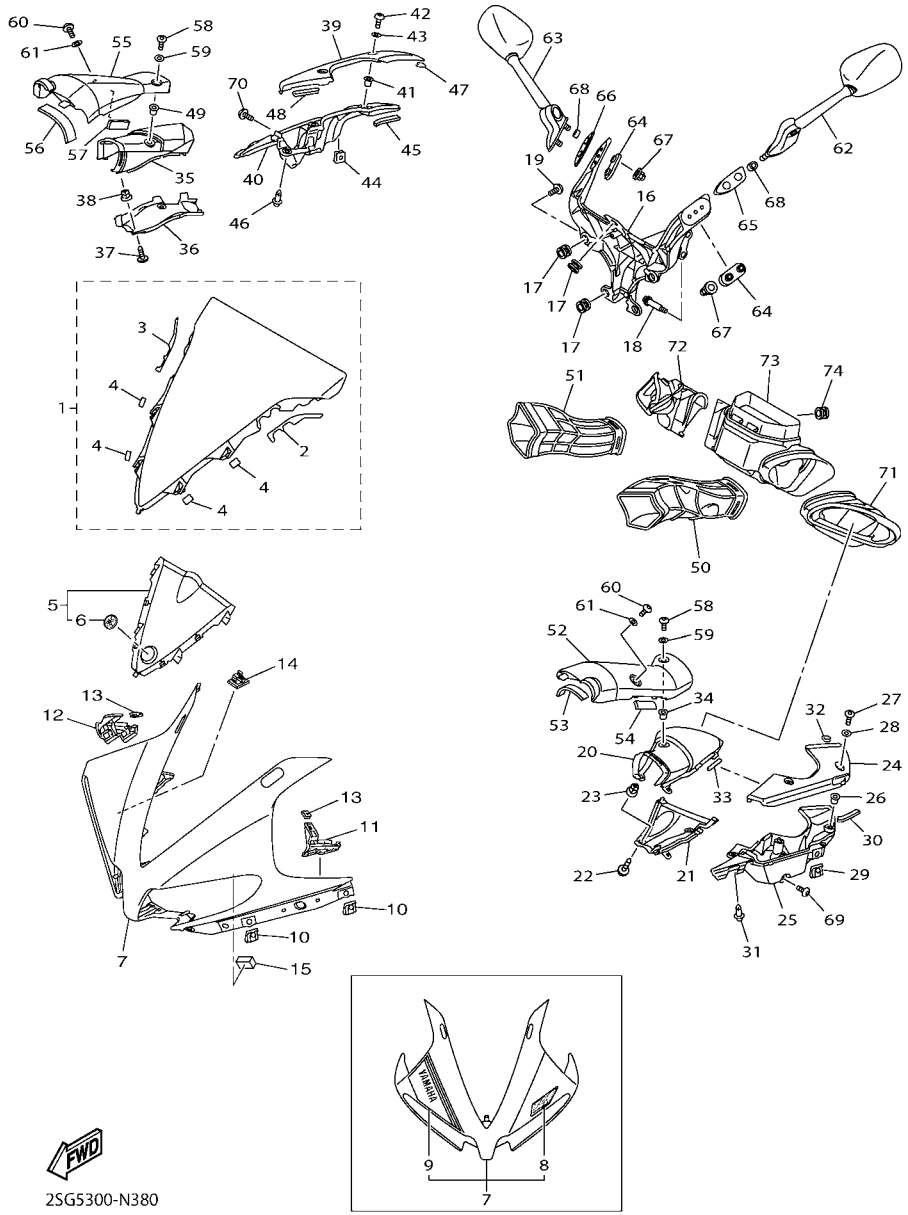

FIG. 38 BOVEDA 1

REF. Nº	CODIGO Nº	DESCRIPCION	2SG5					OBSERVACIONES
55	14B–2837M–00–P5	PANEL, DE CONSOLA 2	1					MBL2
56	4C8–2112D–00	AMORTIGUADOR 3	1					
57	2S3–2111D–00	SELLO 1	1					
58	90111–05034	TORNILLO	2					
59	90202–05180	ARANDELA DE PLANA	2					
60	90111–05034	TORNILLO	2					
61	90202–05180	ARANDELA DE PLANA	2					
62	14B–26280–00	ESPEJO COMPLETO (IZQUIERDO)	1					
63	14B–26290–00	ESPEJO COMPLETO (DERECHO)	1					
64	4C8–26298–00	PLACA DE ESPEJO 1	2					
65	14B–2628N–00	BASE	1					
66	14B–2628R–00	BASE 2	1					
67	90176–06055	TUERCA CORONA	4					
68	90387–064T3	ESPACIADOR	4					
69	90111–05034	TORNILLO	2					
70	90111–05034	TORNILLO	2					
71	14B–2846C–00	CAJA 1	1					
72	14B–2846D–00	CAJA 2	1					
73	14B–2845D–00	CAJA	1					
74	90480–13567	TAPON	1					

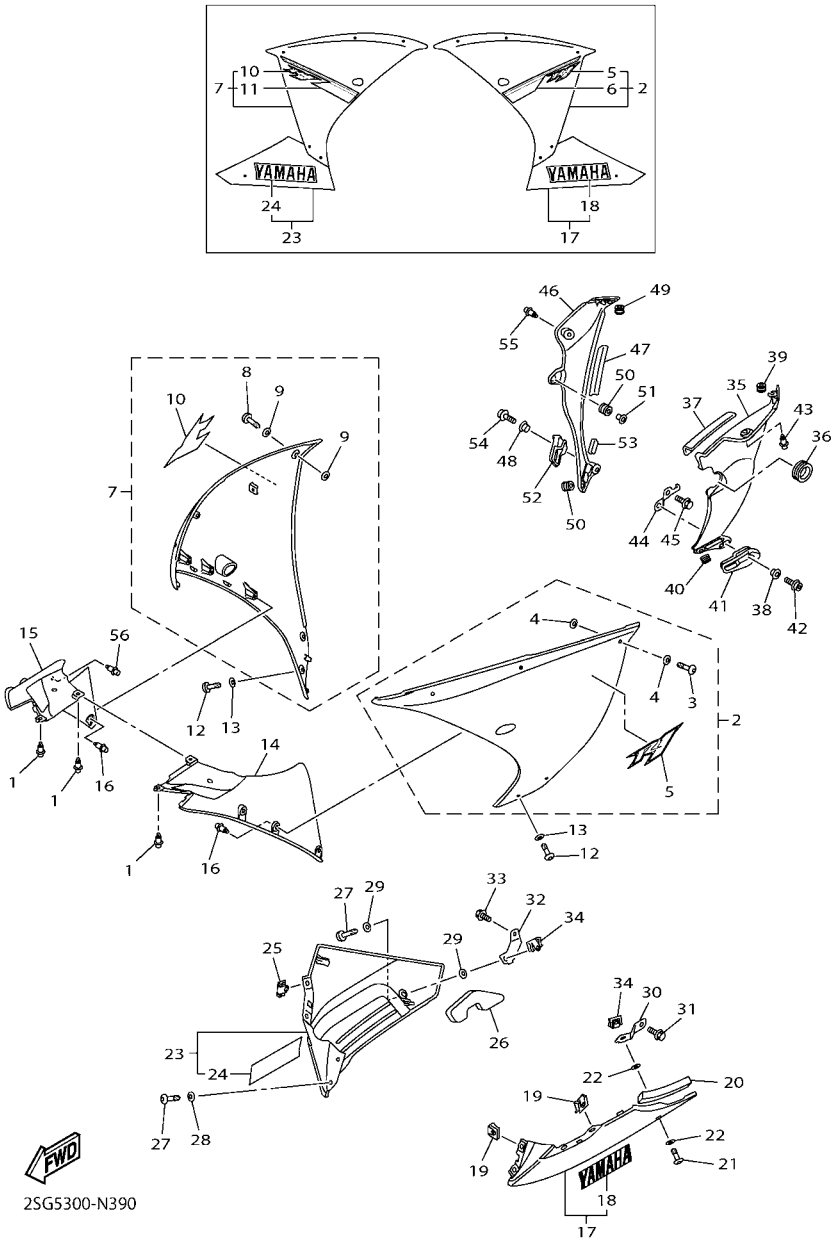

FIG. 39 BOVEDA 2

REF. Nº	CODIGO Nº	DESCRIPCION	2SG5					OBSERVACIONES
1	90269–06008	REMACHE	3					
2	14B–W283U–2C–P6	PANEL 1	1					DNMN
3	14B–28386–00	.CABEZA	3					
4	2TK–21757–00	.ARANDELA ESPECIAL 1	6					
5	2SG–2839B–00	.EMBLEMA	1					
6	2SG–28391–20	.CALCOMANIA 1	1					
7	14B–W283V–2C–P6	PANEL 2	1					DNMN
8	14B–28386–00	.CABEZA	3					
9	2TK–21757–00	.ARANDELA ESPECIAL 1	6					
10	2SG–2839B–00	.EMBLEMA	1					
11	2SG–28392–20	.CALCOMANIA 2	1					
12	14B–28386–00	CABEZA	4					
13	90202–06005	ARANDELA DE PLANA	4					
14	14B–2836K–00	PANEL 1	1					
15	14B–2836L–00	PANEL 2	1					
16	90269–06008	REMACHE	6					
17	14B–W2838–J0–P3	CUBIERTA INFERIOR1	1					DPBMC
18	99247–00240	.EMBLEMA, YAMAHA	1					
19	5PW–2177L–00	PLACA DE RESORTE	4					
20	90520–30004	EQUILIBRIO, CUBIERTA	1					
21	14B–28386–00	CABEZA	1					
22	2TK–21757–00	ARANDELA ESPECIAL 1	2					
23	14B–W2839–J0–P3	CUBIERTA INFERIOR 2	1					DPBMC
24	99247–00240	.EMBLEMA, YAMAHA	1					
25	5PW–2177L–00	PLACA DE RESORTE	2					
26	14B–28371–10	AMORTIGUADOR	1					
27	14B–28386–00	CABEZA	3					

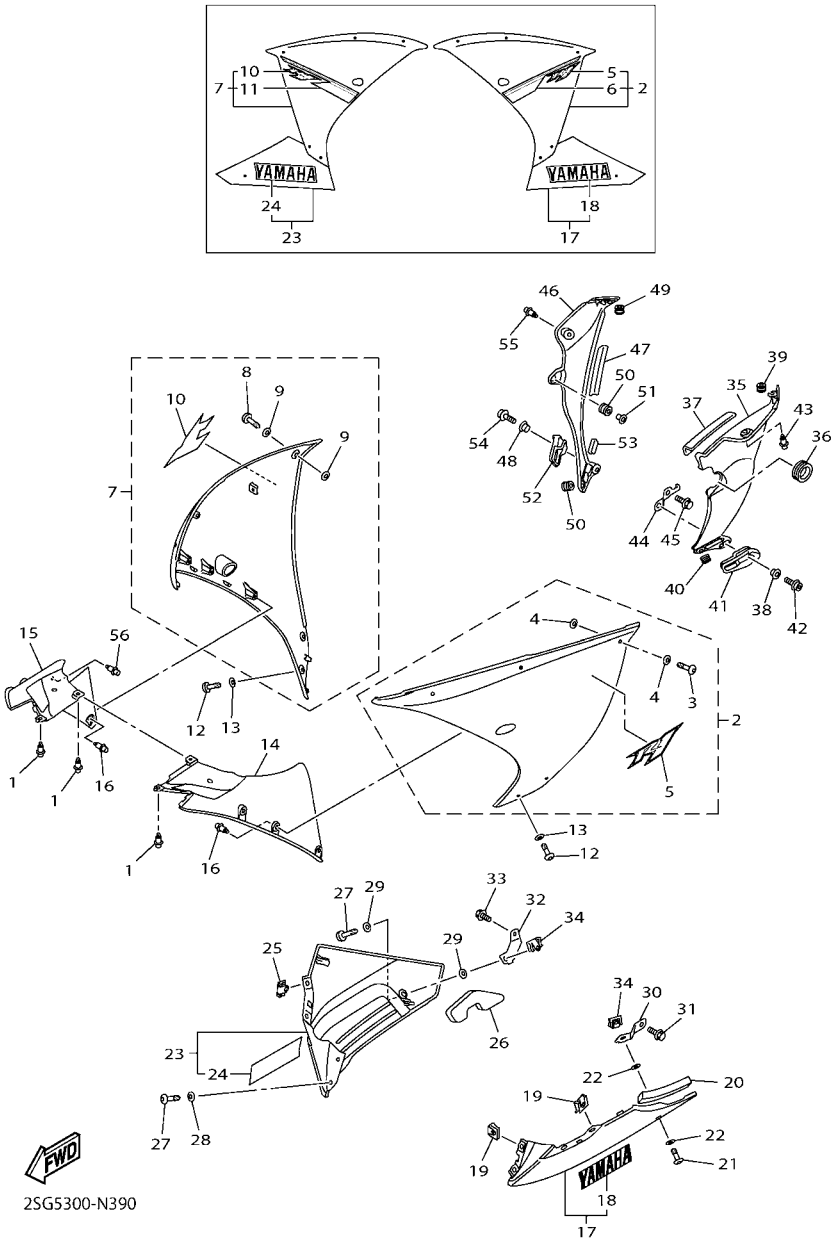

FIG. 39 BOVEDA 2

REF. Nº	CODIGO Nº	DESCRIPCION	2SG5					OBSERVACIONES
28	90202–06005	ARANDELA DE PLANA	2					
29	2TK–21757–00	ARANDELA ESPECIAL 1	2					
30	14B–2836A–00	SOPORTE 1	1					
31	95802–06016	TORNILLO DE REBORDE	1					
32	14B–2836E–00	SOPORTE 2	1					
33	90105–06174	TORNILLO	1					
34	5PW–2177L–00	PLACA DE RESORTE	2					
35	14B–2836M–10–P2	PANEL 3	1					DPBMC
36	14B–2836T–00	AMORTIGUADOR DE MONTAJE 1	1					
37	90520–05011	EQUILIBRIO, CUBIERTA	1					
38	90560–08251	SEPARADOR	1					
39	90480–08006	TAPON	1					
40	90480–12596	TAPON	1					
41	14B–283C1–00	TOPE 1	1					
42	90110–06163	TORNILLO ALLEN	1					
43	90269–07077	REMACHE	1					
44	14B–28321–00	SOPORTE	1					
45	95802–06012	TORNILLO DE REBORDE	1					
46	14B–2836N–10–P2	PANEL 4	1					DPBMC
47	3NU–21732–00	SELLO 1	1					
48	90560–08251	SEPARADOR	1					
49	90480–08006	TAPON	1					
50	90480–12596	TAPON	2					
51	90387–065J6	ESPACIADOR	1					
52	14B–283C2–00	TOPE 2	1					
53	4B5–2847F–00	SELLO 5	1					
54	90110–06163	TORNILLO ALLEN	2					

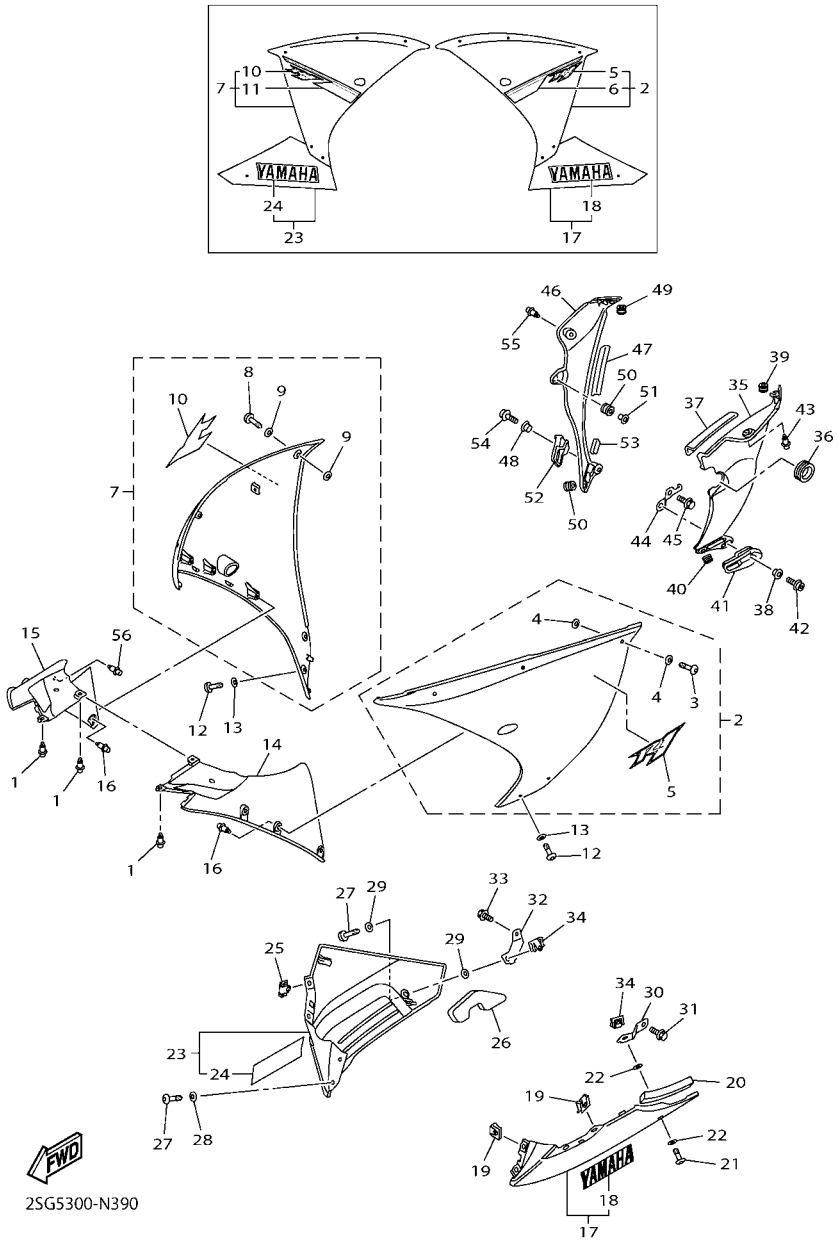

FIG. 39 BOVEDA 2

REF. Nº	CODIGO Nº	DESCRIPCION	2SG5					OBSERVACIONES
55	90269–07077	REMACHE	1					
56	90269–06008	REMACHE	1					

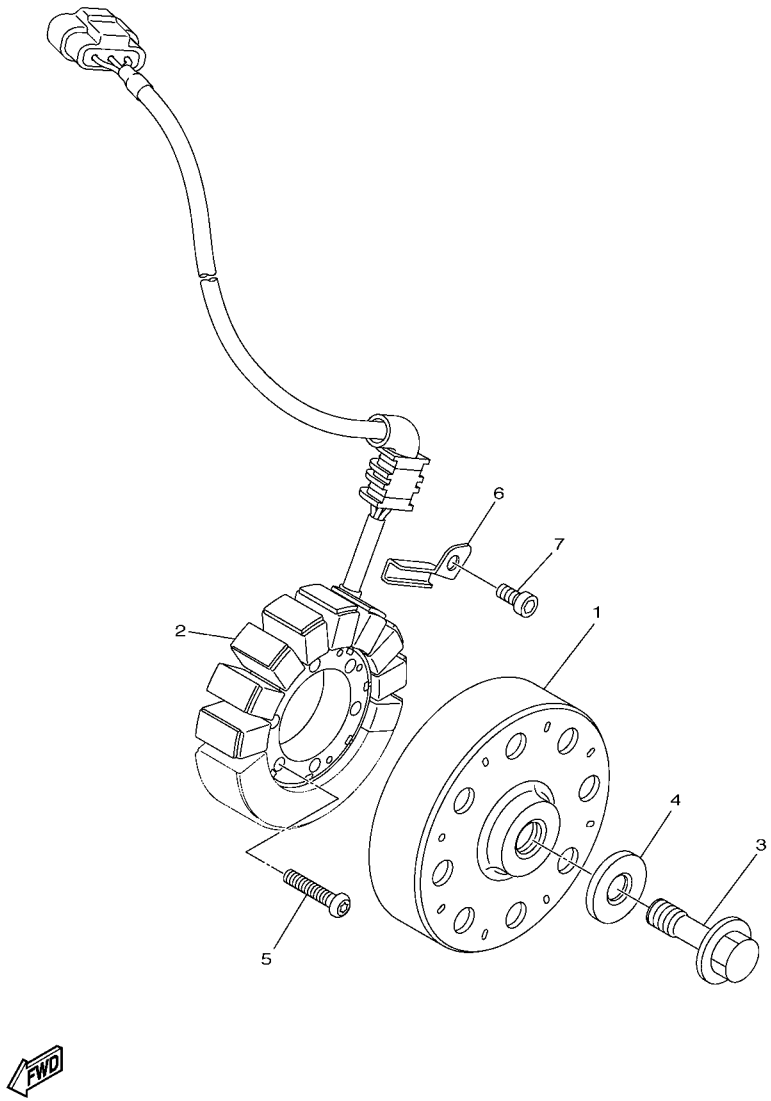

FIG. 40 GENERADOR

REF. Nº	CODIGO Nº	DESCRIPCION	2SG5					OBSERVACIONES
1	14B–81450–00	ROTOR COMPLETO	1					
2	14B–81410–00	ESTATOR COMPLETO	1					
3	90105–126A8	TORNILLO	1					
4	90201–12008	ARANDELA PLANA	1					
5	90149–06128	TORNILLO DE REGLAJE	3					
6	14B–15484–00	GRAMPA 2	1					
7	90110–06182	TORNILLO ALLEN	1					

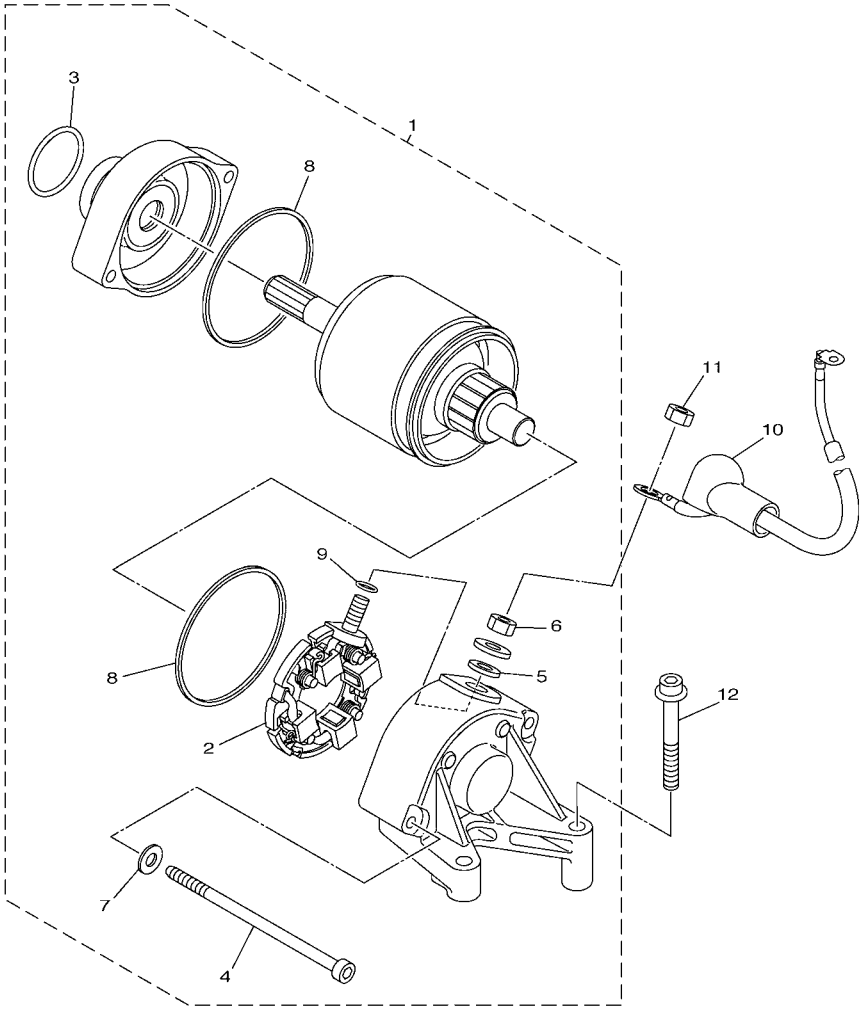

14BR300-K410

FIG. 41 MOTOR DE ARRANQUE

REF. Nº	CODIGO Nº	DESCRIPCION	2SG5					OBSERVACIONES
1	14B–81890–00	MOTOR DE ARRANQUE COMPLETO	1					
2	4C8–81801–01	.JUEGO DE ESCOBILLA	1					
3	93210–25711	.ANILLO O	1					
4	4C8–81846–00	.TORNILLO	2					
5	8FA–8181L–00	.ARANDELA	1					
6	95302–06700	.TUERCA	1					
7	90201–05021	.ARANDELA PLANA	2					
8	4C8–81861–00	.EMPAQUETADURA	2					
9	93210–06001	.ANILLO O	1					
10	14B–8183G–10	CABLE DEL MOTOR COMPL.	1					
11	95302–06700	TUERCA	1					
12	90109–06016	PERNO	2					

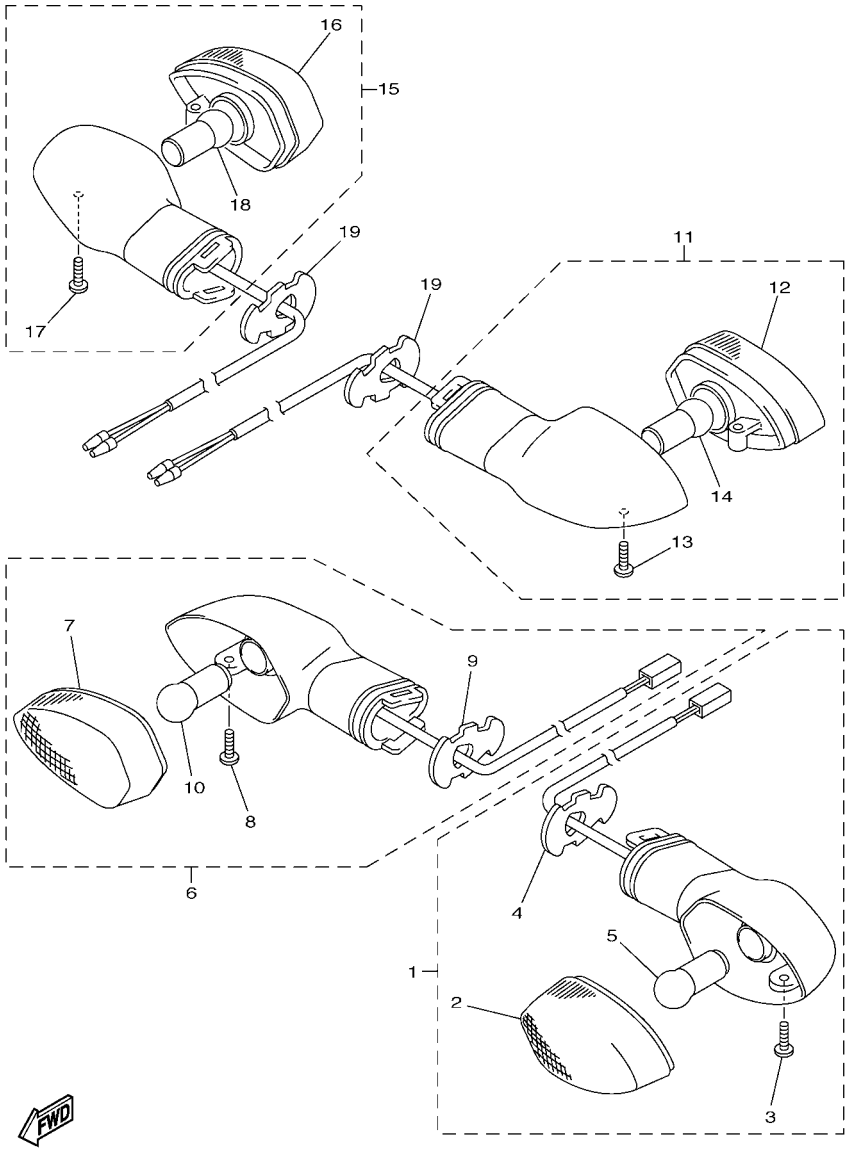

FIG. 42 LUZ DE DESTELLADOR

REF. Nº	CODIGO Nº	DESCRIPCION	2SG5					OBSERVACIONES
1	1KB–83310–00	DESTELLADOR DE LUZ DELANT.	1					
2	1KB–8333A–00	.LENTES COMPLETO 1	1					
3	3D9–H3333–10	.TORNILLO ACCESORIO DE LENTE	1					
4	3D7–83318–10	.SOPORTE DE DESTELLADOR 1	1					
5	1KB–83311–00	.BOMBILLA (12V-10W)	1					
6	1KB–83320–00	DESTELLADOR DE LUZ DELANT.	1					
7	1KB–8334A–00	.LENTES COMPLETO 2	1					
8	3D9–H3333–10	.TORNILLO ACCESORIO DE LENTE	1					
9	3D7–83318–10	.SOPORTE DE DESTELLADOR 1	1					
10	1KB–83311–00	.BOMBILLA (12V-10W)	1					
11	1KB–83330–00	DESTELLADOR DE LUZ TRAS.COMPL.	1					
12	1KB–8334A–00	.LENTES COMPLETO 2	1					
13	3D9–H3333–10	.TORNILLO ACCESORIO DE LENTE	1					
14	1KB–83311–00	.BOMBILLA (12V-10W)	1					
15	1KB–83340–00	DESTELLADOR DE LUZ TRAS.COMPL.	1					
16	1KB–8333A–00	.LENTES COMPLETO 1	1					
17	3D9–H3333–10	.TORNILLO ACCESORIO DE LENTE	1					
18	1KB–83311–00	.BOMBILLA (12V-10W)	1					
19	3D7–83318–10	SOPORTE DE DESTELLADOR 1	2					

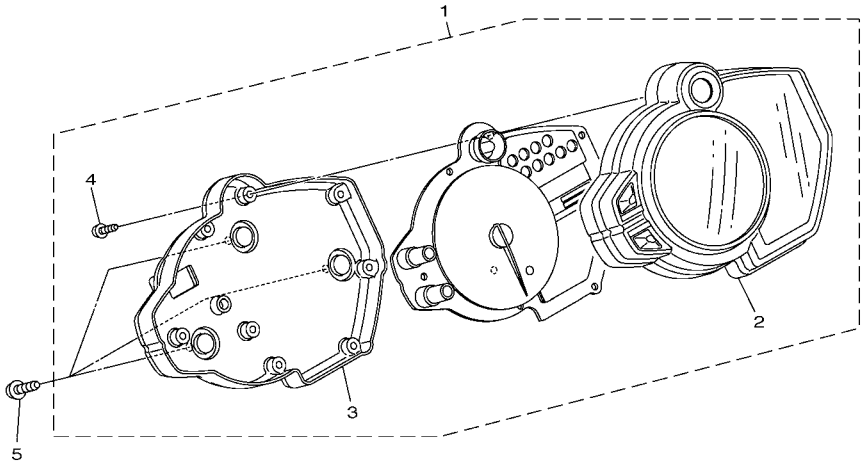

14B1300-H430

FIG. 43 MEDIDOR

REF. Nº	CODIGO Nº	DESCRIPCION	2SG5					OBSERVACIONES
1	1KB–83500–00	METRO COMPLETO (KM/H)	1					
2	14B–8353E–00	.CAJA DE MEDIDOR SUPERIOR	1					
3	14B–83572–00	.CAJA DE VELOCIMETRO INFERIOR	1					
4	5PW–8352S–00	.TORNILLO	8					
5	90160–05006	TORNILLO REDONDO ROSCA HEMBRA	3					

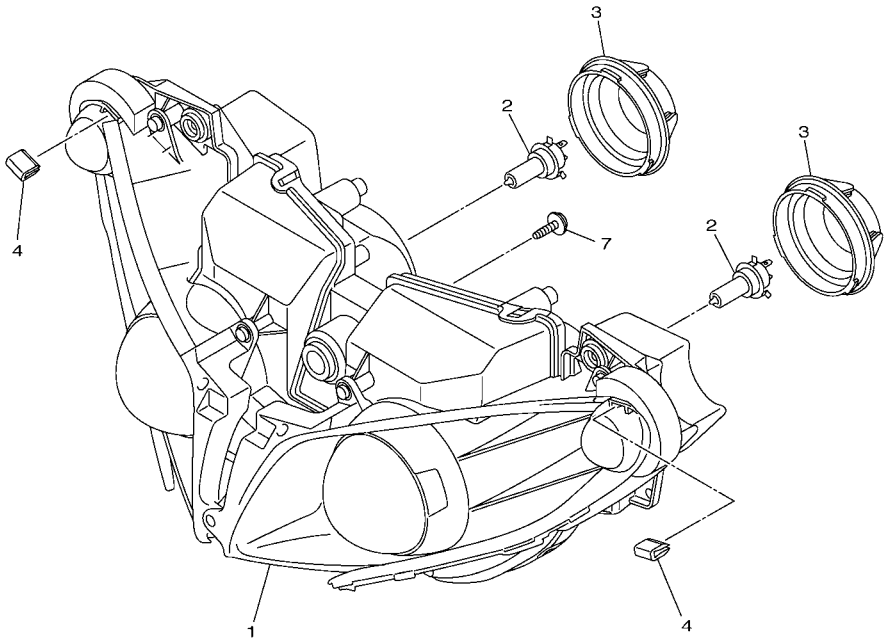

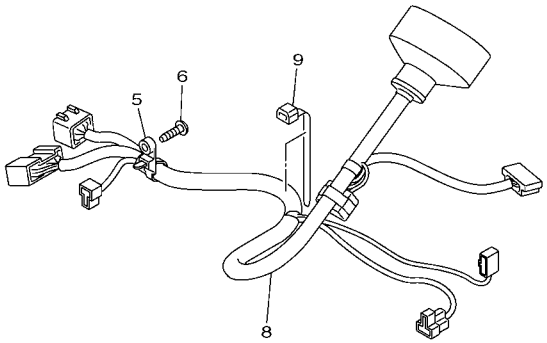

1KB8300-L440

FIG. 44 FARO DELANTERO

REF. Nº	CODIGO Nº	DESCRIPCION	2SG5					OBSERVACIONES
1	1KB–84300–01	FARO DELANTERO COMPLETO	1					
2	5PS–84314–00	.BOMBILLA (12V-55W H7)	2					HALOGEN
3	14B–84396–00	.CUBIERTA	2					
4	20S–28376–00	ADORNO	2					
5	90464–47002	BRIDA	1					
6	97702–50016	TORNILLO ROSCA HEMBRA	1					
7	90160–05007	TORNILLO REDONDO ROSCA HEMBRA	5					
8	1KB–84359–00	CABLE DE FARO DELANTERO	1					
9	90464–15195	BRIDA	1					

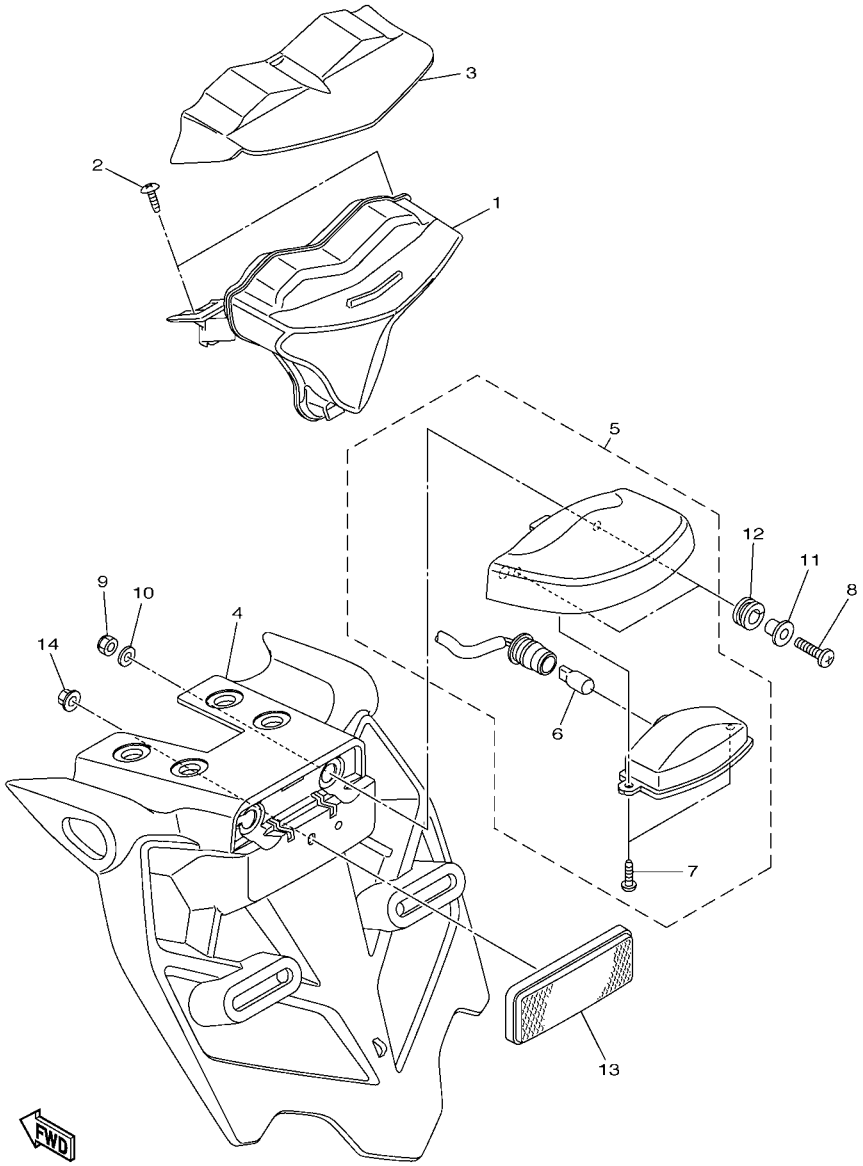

FIG. 45 LUZ DE COLA

REF. Nº	CODIGO Nº	DESCRIPCION	2SG5					OBSERVACIONES
1	14B–84710–00	UNIDAD FARO TRASERO COMPL.	1					
2	97702–50014	TORNILLO ROSCA HEMBRA	2					
3	14B–84516–00	CUBIERTA DE LUZ DE COLA	1					
4	14B–21629–01	GUARDABARRO INFERIOR	1					
5	5VX–84745–01	UNIDAD DE LUZ DE LICENCIA COMP	1					
6	4HC–84744–00	.BOMBILLA (12V-5W)	1					
7	97706–04012	.TORNILLO, ROSCA CHAPA	2					
8	98902–05020	TORNILLO DE LIGAR	2					
9	95602–05100	TUERCA U	2					
10	92907–05200	ARANDELA	2					
11	90387–05003	ESPACIADOR	2					
12	90480–11009	TAPON	2					
13	3Y6–85130–02	REFLECTOR TRASERO COMPLETO	1					
14	95602–05200	TUERCA DE AUTO-CIERRE	1					

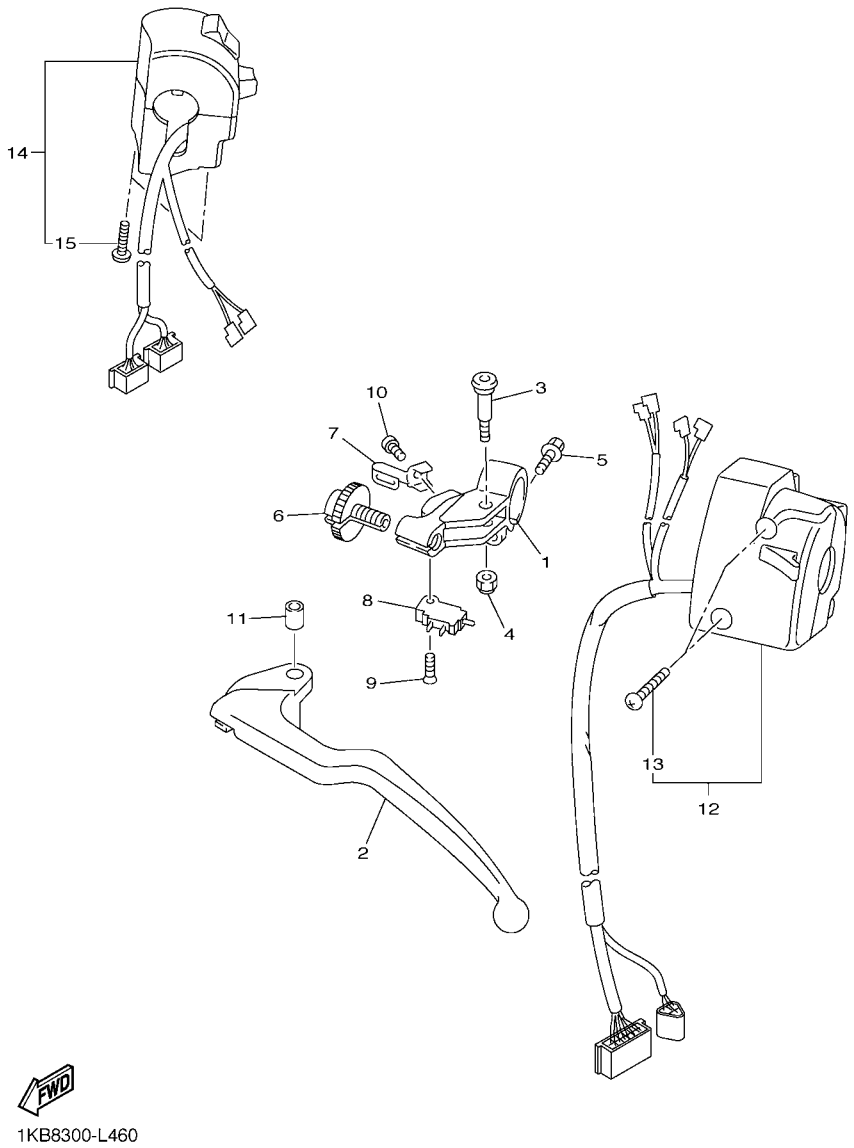

FIG. 46 INTERRUPTOR DE MANILLAR&PALANC

REF. Nº	CODIGO Nº	DESCRIPCION	2SG5					OBSERVACIONES
1	4XV–82911–10	SOPORTE DE LEVA 1	1					
2	5EB–83912–03	PALANCA 1	1					
3	2C0–83945–00	PERNO DE PALANCA	1					
4	95607–06200	TUERCA DE AUTO-CIERRE	1					
5	95027–06020	PERNO, DE BRIDA	1					
6	5LV–83951–00	PERNO DE CABLE DE AJUSTE	1					
7	4XV–83929–00	PLACA DE RESORTE	1					
8	4XV–82917–01	INTERRUPTOR	1					
9	98707–03016	TORNILLO DE CABEZA PLANA	1					
10	98507–04010	TORNILLO DE CABEZA PLANA	1					
11	5JJ–83913–00	COLLAR DE PALANCA 1	1					
12	1KB–83969–00	INTERRUPTOR DE MANIJA 5	1					
13	98507–05025	.TORNILLO DE CABEZA PLANA	2					
14	14B–83963–00	INTERRUPTOR DE MANIJA 3	1					
15	98507–05045	.TORNILLO DE CABEZA PLANA	2					

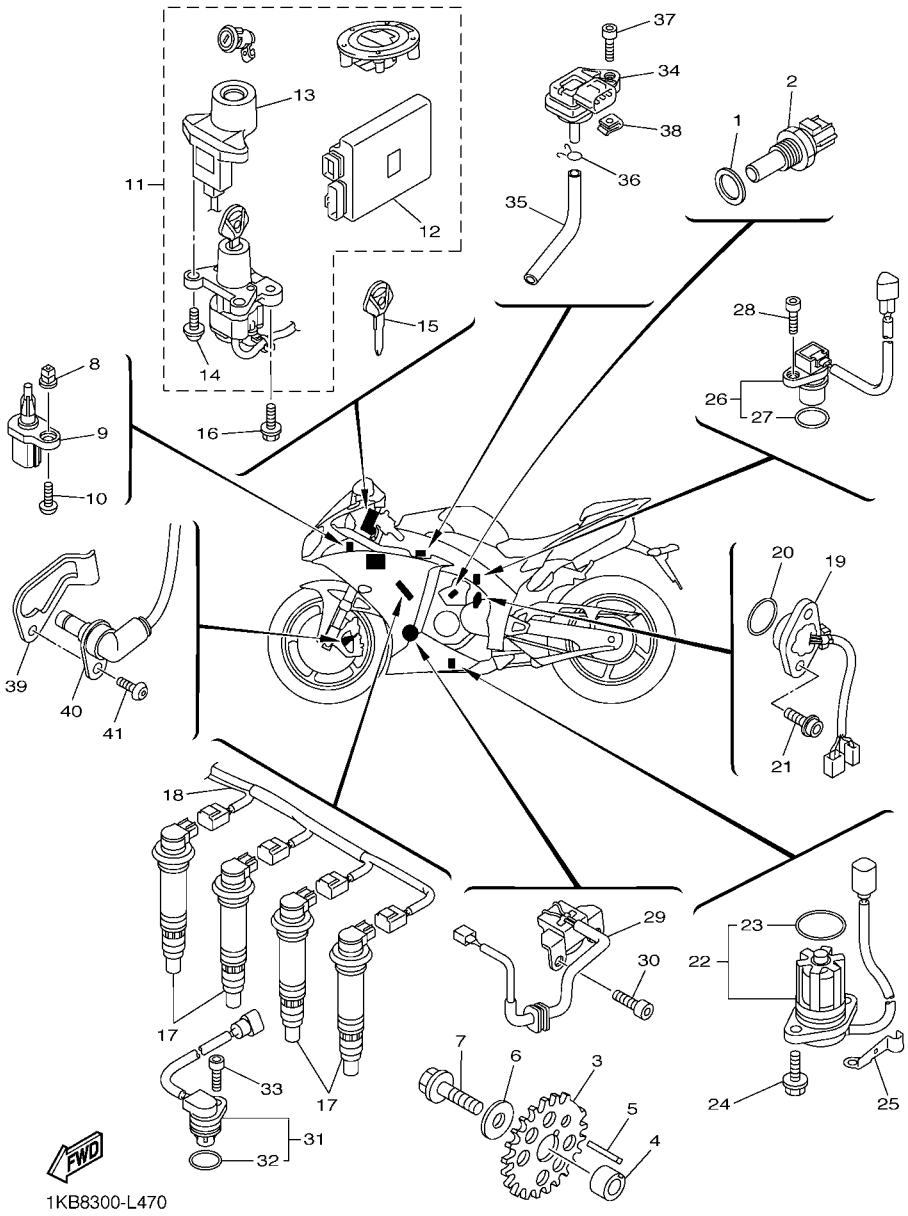

FIG. 47 EQUIPO ELECTRICO 1

REF. Nº	CODIGO Nº	DESCRIPCION	2SG5					OBSERVACIONES
1	90201–12790	ARANDELA PLANA	1					
2	8CC–85790–01	TERMICA SENSORIO	1					
3	14B–81673–00	ROTOR	1					
4	90387–11006	ESPACIADOR	1					
5	90282–03005	CHAVETA, RECTA	1					
6	90201–10034	ARANDELA PLANA	1					
7	90105–10290	TORNILLO	1					
8	90480–08005	TAPON	1					
9	8FP–85886–00	SENSOR	1					
10	97702–50016	TORNILLO ROSCA HEMBRA	1					
11	14B–W8250–C0	JUEGO DE INMOVILIZADOR	1					
12	1KB–8591A–00	.UNIDAD CONTROL	1					
13	14B–8255P–20	.UNIDAD INMOVILIZADORA	1					
14	5SL–82113–01	.TORNILLO	2					
15	5SL–82511–08	BLANK KEY	1					AP
16	90109–08195	PERNO	2					
17	1KB–82310–00	BOBINA DE ENCENDIDO COMPLETA	4					
18	14B–82309–00	CABLE SUBCONDUCTOR	1					
19	14B–82540–01	INTERRUPTOR NEUTRAL COMPL	1					
20	93210–21001	ANILLO O	1					
21	90110–05067	TORNILLO ALLEN	2					
22	14B–85720–00	MEDIDOR DE NIVEL DE ACEITE	1					
23	5VY–8A8E0–00	.ANILLO O	1					
24	95022–06016	PERNO, DE BRIDA	2					
25	90465–08053	BRIDA	1					
26	14B–83755–00	SENSOR DE VELOCIDAD	1					
27	4D9–81168–00	.ANILLO O	1					

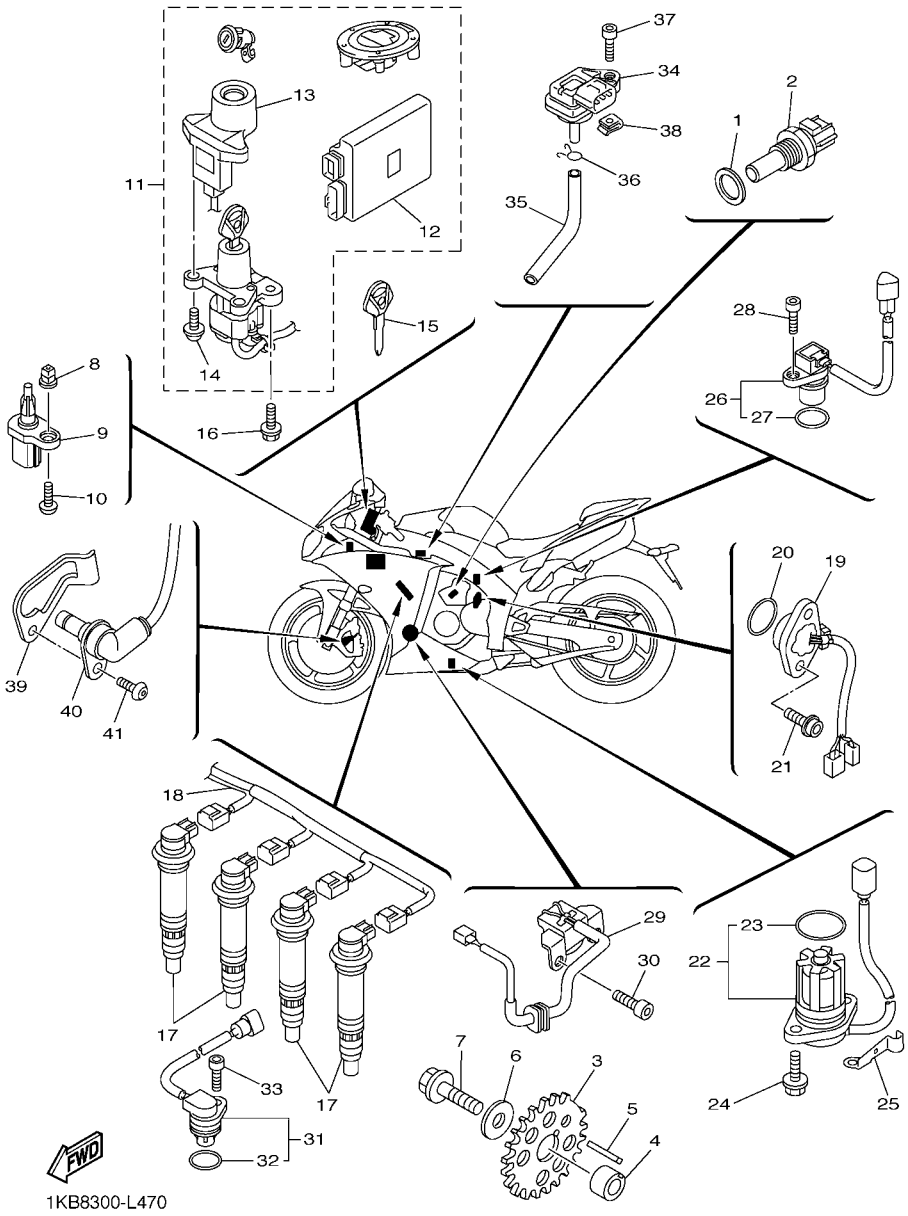

FIG. 47 EQUIPO ELECTRICO 1

REF. Nº	CODIGO Nº	DESCRIPCION	2SG5					OBSERVACIONES
28	90110–06161	TORNILLO ALLEN	1					
29	14B–81670–00	RECOGEDOR COMPL.	1					
30	90110–06168	TORNILLO ALLEN	2					
31	5VY–85896–01	SENSOR DE LEVA	1					
32	4D9–81168–00	.ANILLO O	1					
33	90110–06175	TORNILLO ALLEN	1					
34	2C0–82380–00	SENSOR DE PRESION	1					
35	90445–08028	TUBO	1					
36	90467–08021	PRESILLA	1					
37	91312–05020	TORNILLO	1					
38	90183–05076	TUERCA DE RESORTE	1					
39	1KB–23874–00	SOPORTE DE CABLE	1					
40	1KB–85970–00	CONJUNTO DE CABLES	1					
41	92014–06014	PERNO	1					

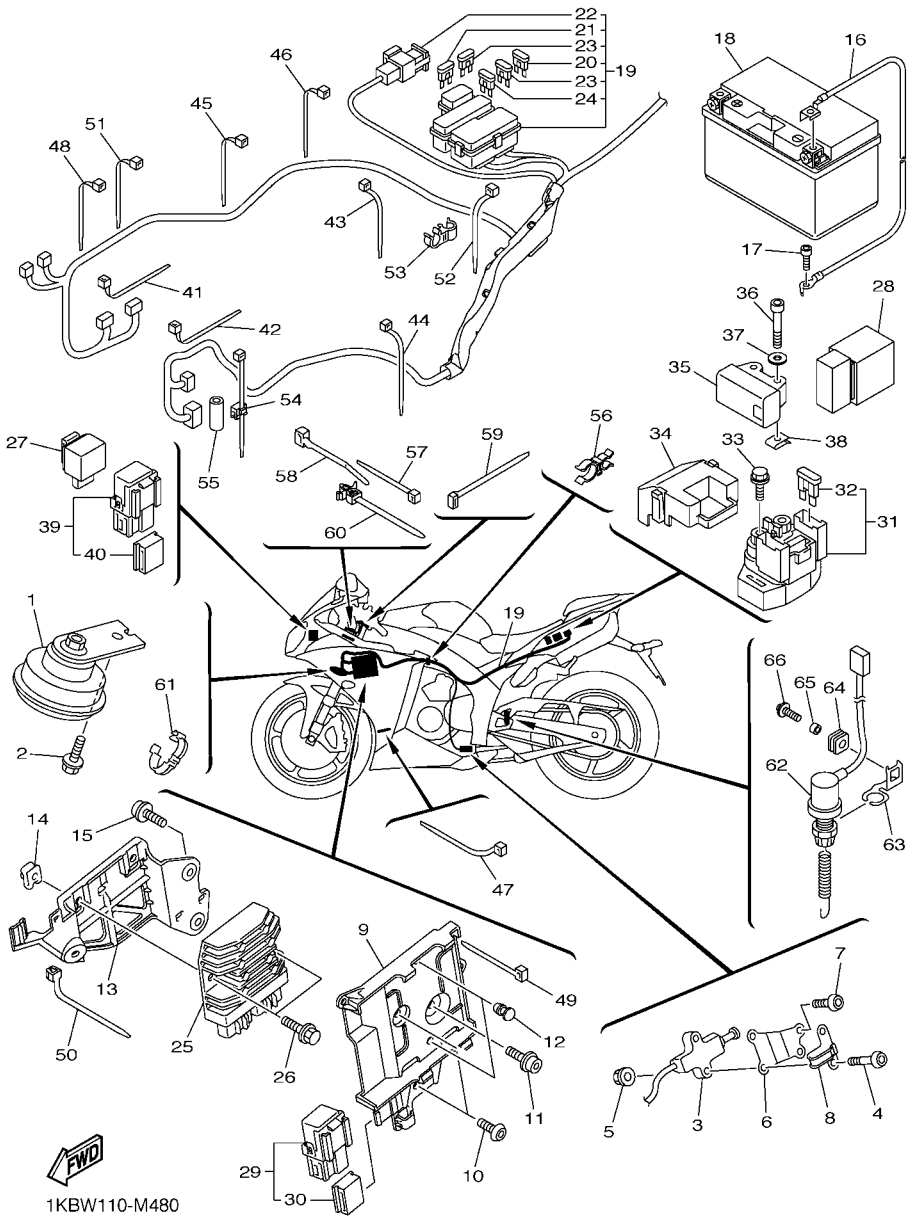

FIG. 48 EQUIPO ELECTRICO 2

REF. Nº	CODIGO Nº	DESCRIPCION	2SG5					OBSERVACIONES
1	14B–83371–00	BOCINA	1					
2	95802–06012	TORNILLO DE REBORDE	1					
3	13S–82566–50	INTERRUPTOR	1					
4	92012–05025	PERNO	2					
5	95602–05200	TUERCA DE AUTO-CIERRE	2					
6	14B–27961–00	SOPORTE	1					
7	92012–05016	PERNO	2					
8	14B–27911–00	SOSTEN	1					
9	14B–2836H–00	MENSULA 5	1					
10	90111–06119	TORNILLO	2					
11	90110–06245	TORNILLO ALLEN	1					
12	90338–06018	TAPON	2					
13	14B–2836J–00	MENSULA 6	1					
14	90183–06069	TUERCA DE RESORTE	2					
15	90110–06245	TORNILLO ALLEN	2					
16	14B–82116–00	CABLE CONDUCTOR NEGATIVO	1					
17	91312–06012	TORNILLO	1					
18	5VY–82100–00	BATERIA COMPLETA(YUASA YTZ10S)	1					
19	1KB–82590–40	CONJUNTO DE CABLES	1					
20	5JJ–82151–10	.FUSIBLE (15A-BL)	2					
21	5JJ–82151–20	.FUSIBLE (20A-BL)	2					
22	5JW–82151–10	.FUSIBLE (50A)	1					
23	5JJ–82151–00	.FUSIBLE (7.5A-BL)	6					
24	5JJ–82151–30	.FUSIBLE (10A-BL)	3					
25	1D7–81960–01	RECTIFICADOR Y REGULADOR	1					
26	90105–06148	TORNILLO	2					
27	4GY–83350–00	RELE DE DESTELLADOR COMPL.	1					

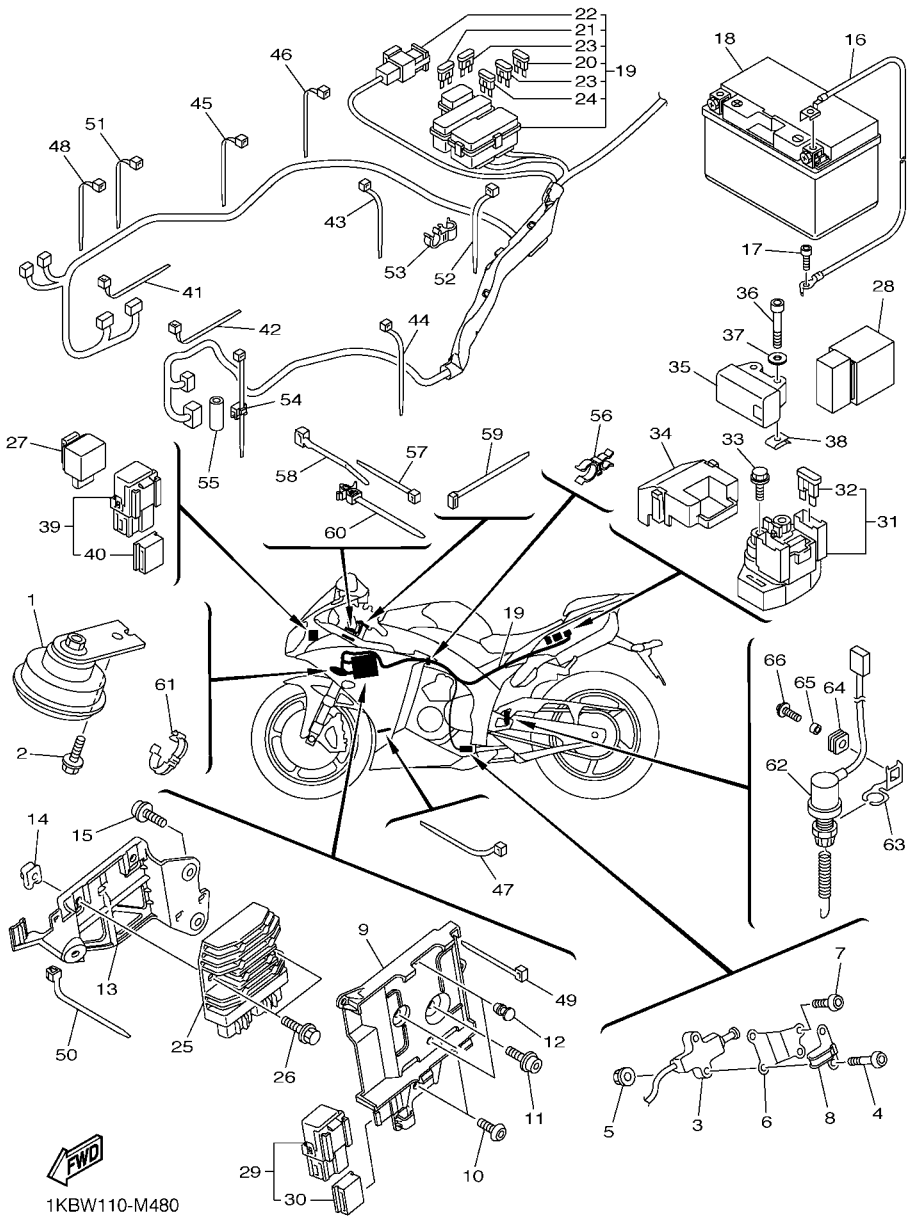

FIG. 48 EQUIPO ELECTRICO 2

REF. Nº	CODIGO Nº	DESCRIPCION	2SG5					OBSERVACIONES
28	5VK–81950–40	RELE COMPLETO (5VK-40)	1					
29	1ST–81950–00	RELE COMPLETO (1ST-00)	1					
30	5JJ–81952–00	.SOSTEN DE RELE	1					
31	2C0–81940–00	ARRANCADOR RELEVO (RC19-054)	1					
32	36Y–82151–00	.FUSIBLE (15A-BL)	2					
33	95022–06008	PERNO, DE BRIDA	2					
34	5SL–82119–10	CUBIERTA DE CABLE CONDUCTOR	1					
35	5VU–82576–01	SENSOR ANGULO DE INCLINATION	1					
36	91312–04025	TORNILLO	2					
37	90201–047A2	ARANDELA PLANA	2					
38	90183–04039	TUERCA DE RESORTE	2					
39	1ST–81950–00	RELE COMPLETO (1ST-00)	1					
40	5JJ–81952–00	.SOSTEN DE RELE	1					
41	90464–13073	BRIDA	1					
42	90464–13073	BRIDA	1					
43	90465–13M11	BRIDA	1					
44	90464–16061	BRIDA	1					
45	90464–16061	BRIDA	1					
46	90464–13077	BRIDA	1					
47	90464–13073	BRIDA	1					
48	90464–13073	BRIDA	1					
49	90465–13M11	BRIDA	1					
50	90464–13073	BRIDA	1					
51	90464–13077	BRIDA	1					
52	90464–13077	BRIDA	1					
53	90464–12009	BRIDA	1					
54	90464–36004	BRIDA	1					

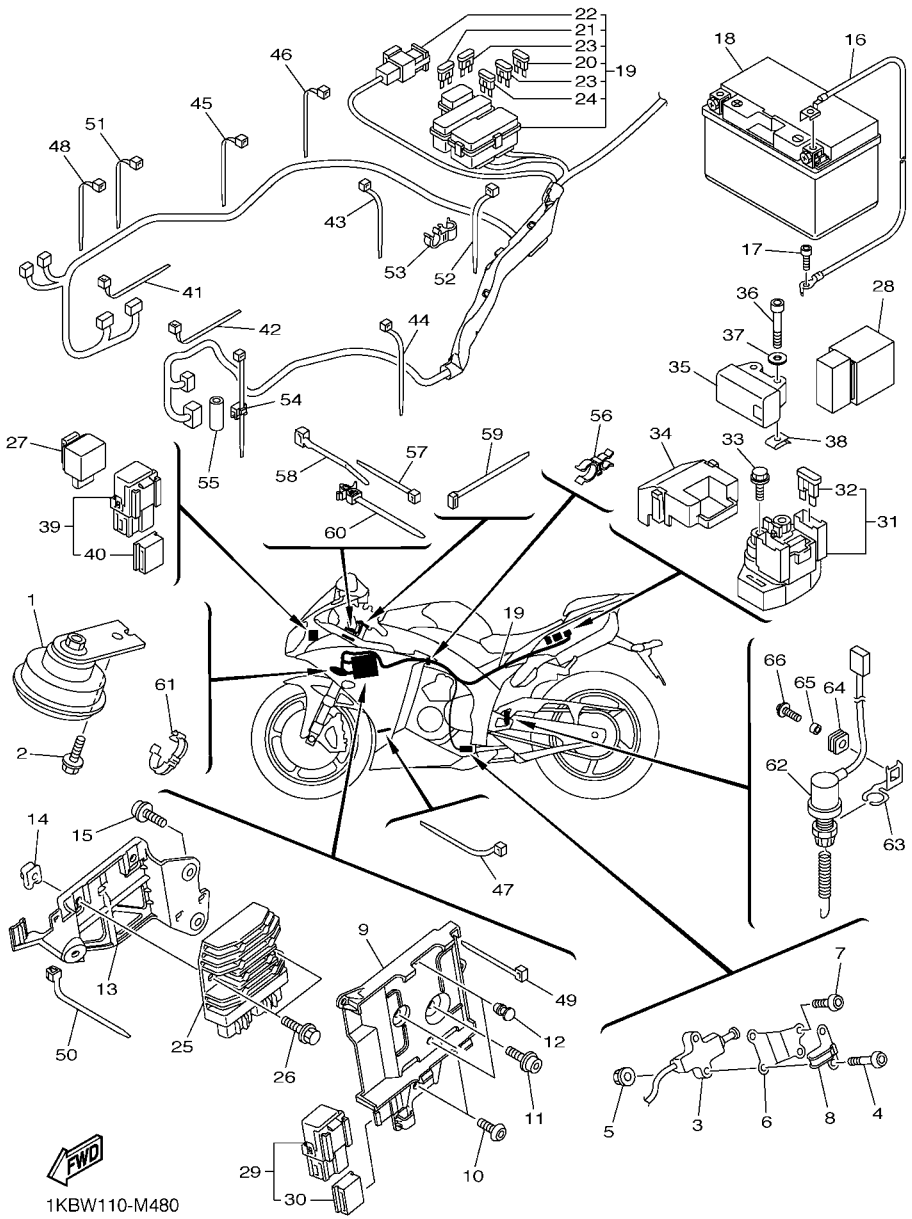

FIG. 48 EQUIPO ELECTRICO 2

REF. Nº	CODIGO Nº	DESCRIPCION	2SG5					OBSERVACIONES
55	90445–107A5	TUBO (L30)	1					
56	90464–21256	BRIDA	1					
57	90465–10098	BRIDA	1					
58	90465–10098	BRIDA	1					
59	90464–59001	BRIDA	1					
60	90464–12089	BRIDA	1					
61	90464–14003	BRIDA	1					
62	14B–82530–00	INTERRUPTOR DE PARADA COMPLETO	1					
63	14B–2144G–00	SOPORTE DE INTERRUPTOR	1					
64	90480–12607	TAPON	1					
65	90387–06M16	ESPACIADOR	1					
66	90159–06150	TORNILLO CON VALONA	1					

CODIGO Nº	REF. Nº
14B–11101–19	1 – 1
5VY–1111G–00	1 – 29
14B–11133–10	1 – 2
4C8–11134–10	1 – 3
14B–11165–00	15 – 24
14B–11181–00	1 – 20
14B–11191–00	1 – 21
14B–11193–00	1 – 23
214–11198–01	9 – 8
14B–11311–00	2 – 1
14B–11351–00	2 – 2
14B–11400–00	3 – 1
14B–11413–00	3 – 12
14B–11413–10	3 – 12
14B–11413–20	3 – 12
14B–11413–30	3 – 12
14B–11413–40	3 – 12
14B–11413–50	3 – 12
14B–11413–A0	3 – 12
14B–11416–00	3 – 6
14B–11416–10	3 – 6
14B–11416–20	3 – 6
14B–11416–30	3 – 6
14B–11416–40	3 – 6
14B–11500–00	3 – 11
14B–11549–00	3 – 5
14B–11603–00	3 – 8
14B–11631–00	3 – 7
4C8–11633–00	3 – 9
14B–11650–00	3 – 2
5VY–11654–01	3 – 3
14B–11656–00	3 – 4
14B–11656–10	3 – 4
14B–11656–20	3 – 4
14B–11656–30	3 – 4
14B–12111–00	4 – 1
14B–12113–00	4 – 4
14B–12114–00	4 – 5
4C8–12116–00	4 – 3
4C8–12117–00	4 – 6
1AA–12118–00	4 – 8
1WG–12118–00	4 – 9
4TE–12119–00	4 – 11
14B–12121–00	4 – 2
4C8–12127–00	4 – 7
3P6–12129–00	4 – 10
4C8–12153–09	4 – 13
4C8–12153–10	4 – 13

CODIGO Nº	REF. Nº
3LD–12168–K1	4 – 12
3LD–12168–M1	4 – 12
3LD–12168–R1	4 – 12
3LD–12168–U1	4 – 12
3LD–12168–W1	4 – 12
3LD–12168–Y1	4 – 12
3LD–12169–11	4 – 12
3LD–12169–31	4 – 12
3LD–12169–50	4 – 12
3LD–12169–70	4 – 12
3LD–12169–90	4 – 12
3LD–12169–E0	4 – 12
3LD–12169–G0	4 – 12
3LD–12169–J0	4 – 12
3LD–12169–L0	4 – 12
3LD–12169–N0	4 – 12
3LD–12169–T0	4 – 12
14B–12170–01	5 – 1
14B–12176–00	5 – 3
14B–12180–01	5 – 2
1KB–12210–00	5 – 6
14B–12213–00	5 – 7
5BE–12241–00	1 – 22
1KB–12251–00	5 – 9
14B–12252–00	5 – 10
1KB–12405–00	7 – 19
1KB–12405–10	7 – 20
14B–12410–00	7 – 4
5LP–12411–00	7 – 5
14B–12420–01	6 – 1
14B–12422–00	6 – 7
5VK–12438–00	6 – 4
4XV–12439–00	6 – 6
14B–1243A–00	7 – 41
14B–1243E–00	7 – 43
14B–1243F–00	7 – 58
14B–1244G–00	7 – 46
14B–12450–00	6 – 5
14B–12461–00	7 – 18
5SL–12462–00	7 – 31
14B–12465–00	7 – 24
14B–12469–10	6 – 30
5GV–1246E–00	7 – 10
	7 – 29
14B–12481–00	6 – 21
14B–12482–00	7 – 14
14B–12484–00	6 – 35
14B–12485–00	7 – 1

CODIGO Nº	REF. Nº
4XV–12485–00	6 – 19
14B–12551–00	7 – 27
14B–12552–00	7 – 49
14B–12576–00	6 – 27
14B–12578–00	7 – 16
14B–12579–00	7 – 12
4C8–12579–00	7 – 8
14B–12588–00	6 – 25
14B–12589–00	7 – 38
14B–12637–00	6 – 33
5SL–12671–00	7 – 26
5GJ–12675–00	7 – 21
14B–12682–01	10 – 37
13S–12688–00	7 – 25
5FL–12822–00	9 – 15
5VY–13117–10	8 – 5
14B–13161–00	9 – 12
14B–1316E–00	8 – 10
14B–13338–00	6 – 3
14B–13354–00	17 – 26
14B–13355–00	6 – 12
1KB–13400–00	9 – 6
14B–13410–00	8 – 2
14B–13414–00	9 – 10
14B–13416–00	8 – 7
5GH–13440–50	9 – 2
14B–13470–00	9 – 14
14B–13473–00	9 – 17
5EB–13475–00	9 – 16
14B–13490–00	9 – 3
8FP–13556–00	10 – 25
	11 – 4
14B–13573–00	11 – 9
14B–13595–00	10 – 2
14B–13596–00	10 – 4
1KB–13750–00	11 – 1
5S7–13761–00	11 – 22
14B–13761–10	10 – 23
14B–13767–01	10 – 26
14B–13795–00	11 – 20
2C0–13881–00	10 – 38
14B–13898–00	8 – 15
14B–13907–20	28 – 24
14B–1393A–00	11 – 2
14B–1393B–00	11 – 3
14B–13971–00	11 – 28
14B–13972–00	10 – 34
2C0–14105–00	11 – 13

CODIGO Nº	REF. Nº
4KM–14137–00	11 – 14
8A7–14139–00	11 – 12
39P–14147–00	11 – 21
5PS–14147–00	10 – 24
	11 – 23
895–14169–00	11 – 11
363–14198–00	11 – 8
2C0–14216–00	11 – 7
5FL–14216–00	11 – 10
8CC–14216–10	11 – 6
5JW–14348–00	11 – 18
5FL–14348–10	11 – 15
5PW–14349–00	11 – 19
5PW–14396–00	11 – 5
14B–14402–01	10 – 22
14B–1440B–00	10 – 15
14B–14411–01	10 – 6
14B–14412–01	10 – 30
14B–14421–01	10 – 18
14B–14425–00	10 – 9
13S–14445–00	10 – 21
14B–14445–00	10 – 16
14B–14451–00	10 – 33
14B–14452–00	10 – 19
14B–14457–00	10 – 7
14B–14462–00	10 – 8
14B–14467–00	10 – 31
14B–1446R–00	10 – 20
14B–14490–00	10 – 11
14B–14498–00	10 – 17
14B–14602–00	13 – 1
4FM–14613–00	13 – 2
14B–14618–00	13 – 19
14B–14623–00	13 – 17
14B–1465R–00	13 – 28
14B–1465T–00	13 – 38
14B–1465U–00	13 – 21
14B–14710–30	13 – 23
5VY–14714–00	13 – 24
	13 – 34
3D8–14715–00	13 – 26
	13 – 36
1KB–14718–00	13 – 52
14B–14720–30	13 – 33
14B–14725–00	13 – 18
1KB–14728–00	13 – 58
2D1–14737–00	13 – 14
	36 – 56

CODIGO Nº	REF. Nº
3D7–14737–00	13 – 30
	13 – 40
14B–14738–00	13 – 5
14B–14740–10	13 – 4
5VY–14747–00	13 – 50
14B–1478P–00	13 – 75
14B–1479P–00	13 – 76
5VY–1482K–00	1 – 24
2D1–14840–00	12 – 1
4C8–14881–01	12 – 2
4C8–14882–01	12 – 3
14B–14883–00	12 – 5
5SL–14890–10	1 – 25
14B–14899–01	1 – 26
14B–15100–08	14 – 1
14B–15123–00	14 – 6
14B–15124–00	14 – 7
14B–15133–00	14 – 8
5EB–15155–00	14 – 2
14B–15156–00	14 – 14
14B–15163–00	18 – 10
36Y–15189–00	14 – 25
4H7–15189–00	14 – 27
5PW–15361–00	14 – 22
3F9–15362–10	15 – 11
14B–15377–00	15 – 5
14B–15379–00	15 – 30
14B–15393–00	10 – 13
14B–15411–00	15 – 1
14B–15413–00	15 – 26
14B–15416–00	15 – 17
14B–15418–00	15 – 6
14B–15421–00	15 – 8
14B–15423–01	15 – 29
14B–15431–01	15 – 18
14B–15441–01	14 – 23
14B–15451–00	15 – 2
14B–15456–00	15 – 21
14B–15461–00	15 – 13
14B–15462–00	15 – 27
14B–15484–00	40 – 6
5VY–15499–00	15 – 9
14B–15515–00	16 – 1
14B–15517–00	16 – 3
14B–15521–00	16 – 4
14B–15570–00	16 – 7
14B–16150–20	17 – 1
363–16154–00	17 – 24

CODIGO Nº	REF. Nº
4C8–16154–00	17 – 2
14B–16181–00	17 – 25
5VY–16321–00	17 – 7
4B1–16324–00	17 – 16
4B1–16325–00	17 – 15
	17 – 16
5VY–16325–00	17 – 8
	17 – 15
	17 – 16
14B–16330–00	17 – 6
14B–16340–00	17 – 20
132–16346–00	20 – 2
14B–16351–00	17 – 9
4XV–16356–01	17 – 19
1KB–16360–00	17 – 4
1KB–16370–10	17 – 5
4C8–16377–00	17 – 17
5VY–16382–10	17 – 29
14B–16384–00	17 – 13
2S3–16539–00	17 – 14
2D1–17121–10	18 – 9
1KB–17131–00	18 – 6
4C8–17151–00	18 – 3
1KB–17161–00	18 – 8
5VY–17211–00	18 – 31
14B–17221–00	18 – 20
14B–17231–00	18 – 28
14B–17241–00	18 – 25
14B–17251–00	18 – 29
14B–17261–00	18 – 23
1KB–17402–00	18 – 16
14B–17411–00	18 – 1
3C3–17460–00	18 – 34
14B–18101–01	20 – 9
14B–18110–00	20 – 17
5JJ–18112–20	20 – 15
5EB–18113–00	20 – 18
5LV–18115–10	20 – 20
5LV–18116–00	20 – 23
1D7–18127–00	20 – 4
14B–18140–00	20 – 12
4XV–18154–00	20 – 19
	20 – 24
2C0–18175–00	20 – 11
14B–18511–00	19 – 5
14B–18512–00	19 – 6
14B–18513–00	19 – 7
14B–18531–00	19 – 8

CODIGO Nº	REF. Nº
2C0–18535–00	19 – 9
14B–18536–00	19 – 11
14B–18540–00	19 – 1
3D7–18542–00	19 – 2
14B–18562–00	19 – 12
14B–2110N–20	21 – 47
14B–21110–00	21 – 1
2S3–2111D–00	38 – 54
	38 – 57
14B–2112B–00	21 – 48
4C8–2112D–00	38 – 53
	38 – 56
14B–21131–00	21 – 16
14B–2113C–00	21 – 49
14B–2113D–00	21 – 50
14B–21161–00	28 – 9
14B–21162–00	28 – 14
5VY–2117K–01	29 – 16
14B–21190–00	21 – 15
1KB–211C5–00	21 – 20
14B–21414–00	21 – 4
14B–2141R–00	21 – 6
14B–21424–00	21 – 5
14B–21445–00	13 – 9
14B–21446–00	13 – 49
14B–2144G–00	48 – 63
14B–21495–00	21 – 9
	21 – 12
14B–21511–00–P8	22 – 1
13S–21567–00	21 – 38
4C8–21568–01	28 – 56
14B–21600–00–P2	22 – 15
14B–21615–00	21 – 31
14B–21629–01	45 – 4
14B–21639–00	22 – 23
14B–2163A–00	21 – 25
14B–2163E–00	13 – 64
14B–2163F–00	13 – 69
14B–21640–10	21 – 23
14B–21649–00	22 – 24
14B–21650–00	24 – 46
14B–21668–00	24 – 51
14B–21669–00	22 – 16
14B–21682–00	21 – 24
14B–21710–00–P2	23 – 1
14B–2171A–00–P7	28 – 35
14B–2172W–00	7 – 61
14B–21732–00	22 – 22

CODIGO Nº	REF. Nº
3NU–21732–00	39 – 47
5PW–21732–00	22 – 21
5VY–21732–00	22 – 20
4C8–21735–00	22 – 19
	38 – 4
13S–2173M–00	21 – 35
13S–21746–00	21 – 32
4C8–21747–00	23 – 3
5VU–21747–00	28 – 52
4GY–2174X–00	22 – 17
2TK–21757–00	39 – 4
	39 – 9
	39 – 22
	39 – 29
5VY–2176V–00	29 – 17
3XV–21778–00	28 – 43
5PW–2177L–00	38 – 10
	38 – 29
	38 – 44
	39 – 19
	39 – 25
	39 – 34
26H–21828–00	7 – 54
14B–21871–00	7 – 52
14B–21875–00	7 – 53
14B–22110–00–P0	24 – 1
5VY–22128–00	24 – 6
14B–22141–00	24 – 41
2S2–2214F–70	21 – 43
14B–22151–00	24 – 13
1KB–2217A–00	24 – 23
1KB–2217M–00	24 – 26
14B–22184–00	24 – 5
1KB–22210–00	25 – 1
1KB–22219–00	25 – 10
4C8–22252–00	24 – 44
14B–22253–00	25 – 6
14B–22311–00	24 – 19
14B–22873–00	21 – 33
14B–22874–00	21 – 34
1KB–22876–00	21 – 36
1KB–22877–00	21 – 37
14B–22879–00	21 – 39
1KB–23102–30	27 – 1
1KB–23103–30	27 – 21
14B–23106–20	27 – 3
	27 – 23
14B–23109–00	27 – 10

CODIGO Nº	REF. Nº
14B–23109–00	27 – 30
1KB–23110–01	27 – 2
14B–23111–10	27 – 12
4TX–23115–00	27 – 7
	27 – 27
14B–23118–00	27 – 19
	27 – 39
14B–2311J–10	27 – 32
1KB–23120–01	27 – 22
14B–23141–00	27 – 17
	27 – 37
13S–23142–00	27 – 18
	27 – 38
4TX–23144–01	27 – 4
	27 – 24
5VX–23145–00	27 – 6
	27 – 26
4TX–23156–00	27 – 5
	27 – 25
1KB–2315K–00	27 – 8
1KB–2315L–00	27 – 28
14B–2318Y–00	27 – 11
	27 – 31
14B–2319M–00	27 – 9
	27 – 29
45B–2331E–00	26 – 24
13S–2332N–00	27 – 15
	27 – 35
14B–23340–00	27 – 41
14B–23377–20	26 – 28
13S–23393–00	27 – 14
	27 – 34
4XV–23415–01	26 – 4
4XV–23418–00	26 – 6
4XV–23434–00	34 – 5
	34 – 12
1KB–23435–00	26 – 10
3FV–23462–00	26 – 2
14B–23490–10	26 – 20
14B–23495–00	26 – 18
14B–23808–00	26 – 29
1KB–23874–00	47 – 39
14B–24106–10	28 – 57
14B–24108–10	28 – 65
5PW–2411J–01	28 – 50
	28 – 51
14B–24121–00	21 – 13
14B–24122–00	21 – 14

CODIGO Nº	REF. Nº
14B–24135–00	28 – 26
5SL–2413B–00	28 – 2
14B–2413Y–10	28 – 17
14B–2414G–00	28 – 54
14B–2414H–00	28 – 41
2C0–2414H–00	28 – 58
	28 – 66
3C5–2414H–00	21 – 41
14B–2414J–00	28 – 59
	28 – 67
2C0–2414J–00	28 – 60
	28 – 68
14B–2414K–10	28 – 53
14B–2414N–20	28 – 48
14B–2414P–20	28 – 49
1RC–2416B–00	28 – 36
14B–24181–00	28 – 44
4FM–24181–00	13 – 32
5VY–24181–00	28 – 7
	28 – 12
4C8–24182–00	28 – 42
5SL–24183–00	28 – 18
5VY–24183–00	28 – 5
4BP–24188–00	28 – 4
14B–24191–10	28 – 6
14B–24192–10	28 – 11
5JW–24311–00	11 – 16
14B–24312–00	28 – 30
14B–24313–00	28 – 32
14B–24314–00	28 – 33
68V–24376–00	11 – 17
19B–24486–01	28 – 28
13S–24491–00	28 – 25
39P–24602–10	28 – 21
14B–24710–00	29 – 1
14B–24711–00	29 – 2
5SL–24723–00	29 – 6
13S–24725–00	29 – 11
14B–24725–00	29 – 10
14B–24750–00	29 – 5
1KB–24780–00	29 – 7
14B–2478E–00	29 – 14
2C0–24792–00	29 – 8
13S–24847–00	29 – 13
4XV–25117–00	30 – 2
1KB–25168–00–P0	30 – 1
1KB–2517G–00	31 – 4
2C0–25181–00	30 – 8

CODIGO Nº	REF. Nº
5PW–25188–00	30 – 9
5PW–25317–00	32 – 6
5VY–25338–00–P4	32 – 1
2C0–25364–00	32 – 8
5JJ–25366–00	32 – 12
4C8–25381–00	32 – 22
4XV–25383–00	32 – 7
5VY–25388–00	32 – 20
5VY–25389–01	32 – 21
5MT–25398–00	30 – 7
	32 – 11
5MT–25398–10	30 – 7
	32 – 11
5MT–25398–20	30 – 7
	32 – 11
14B–25447–20	32 – 15
4C8–25802–00	31 – 6
	31 – 16
4C8–25803–00	31 – 7
	31 – 17
4C8–25805–00	31 – 8
	31 – 18
4C8–2580T–10	31 – 5
4C8–2580U–10	31 – 15
5VY–2580W–12	33 – 3
1KB–2581T–00	31 – 1
1KB–2581U–00	31 – 2
3YK–25824–00	35 – 5
3YK–25825–00	35 – 6
5SL–25827–00	33 – 17
5SL–25827–10	33 – 18
5SL–25828–01	33 – 19
4ML–2582A–50	37 – 8
5SL–2582W–00	33 – 1
5SL–25838–00	33 – 7
5VY–2583B–00	31 – 14
	31 – 24
14B–2583V–00	37 – 6
2C0–25852–00	37 – 13
5VY–25852–00	35 – 18
2VN–25854–00	37 – 14
5VY–25854–00	35 – 16
2VN–25855–00	37 – 15
5VY–25855–00	35 – 17
2VN–25866–00	37 – 9
5VS–25867–00	35 – 26
1KB–25872–00	35 – 23
1KB–25874–00	37 – 28

CODIGO Nº	REF. Nº
1KB–25875–00	35 – 1
14B–25876–00	35 – 2
1KB–2588F–00	37 – 29
14B–25894–00	37 – 12
5SL–25894–20	35 – 15
14B–25895–00	37 – 19
5VY–25895–10	35 – 19
3FV–2589A–00	37 – 11
5VY–2589F–01	35 – 8
5VY–2589G–00	35 – 21
5VY–2589H–00	35 – 22
5SL–25914–00	33 – 9
5DH–25916–00	33 – 14
3JD–25917–00	33 – 11
5SL–25917–00	33 – 6
4C8–25919–00	31 – 10
	31 – 20
5SL–25919–00	33 – 8
2S3–25919–10	31 – 11
	31 – 21
5VY–25921–01	33 – 10
4SV–25924–00	31 – 9
	31 – 19
8CR–25924–00	33 – 13
3GM–25925–00	31 – 12
	31 – 22
5SL–25926–00	33 – 15
5VY–25975–00	35 – 7
14B–26121–00	34 – 1
14B–26122–00	34 – 8
4C8–26240–00	34 – 13
2C0–26241–00	34 – 6
5PW–26246–10	34 – 3
	34 – 10
14B–26280–00	38 – 62
3LN–26281–01	34 – 17
3LN–26282–01	34 – 18
14B–2628N–00	38 – 65
14B–2628R–00	38 – 66
14B–26290–00	38 – 63
1KB–26292–00	26 – 14
4C8–26298–00	38 – 64
14B–26302–01	34 – 14
2C0–26326–00	37 – 17
1KB–26335–00	34 – 7
5VY–26398–00	26 – 27
14B–27211–00	37 – 1
4XV–27222–01	37 – 21

CODIGO Nº	REF. Nº
14B–27311–00	36 – 1
14B–27321–00	36 – 2
14B–27351–00	36 – 3
14B–27352–00	36 – 4
13S–27417–00	36 – 49
14B–2741L–10	36 – 33
14B–27424–00	13 – 45
4XV–27424–00	13 – 10
14B–2742L–10	36 – 41
5JJ–27431–10	36 – 32
4C8–27434–00	20 – 25
	37 – 2
5JJ–27437–01	36 – 36
	36 – 44
5JJ–27441–10	36 – 40
14B–27442–10	36 – 13
14B–27443–10	36 – 22
14B–27445–10	36 – 19
14B–27446–10	36 – 29
1KB–27451–00	36 – 14
1KB–27461–00	36 – 23
14B–27469–00	36 – 50
14B–27490–00	36 – 52
1KB–27498–00	13 – 55
1KB–27499–00	13 – 56
14B–2749A–00	36 – 53
1KB–2749A–00	13 – 57
14B–2749B–00	36 – 54
1KB–2749B–00	13 – 61
1KB–2749C–00	13 – 62
14B–2749D–00	36 – 55
1KB–2749D–00	13 – 63
4C8–27813–00	36 – 28
14B–27911–00	48 – 8
14B–27961–00	48 – 6
14B–28100–00	22 – 26
2SG–28199–S0	22 – 27
14B–28227–00	21 – 42
14B–28237–00	21 – 44
1KB–2830P–00	38 – 5
1KB–2831U–00	38 – 11
14B–28321–00	39 – 44
14B–28322–00	14 – 10
2SG–28328–20	38 – 8
2SG–2832L–20	38 – 9
1KB–2832U–00	38 – 12
14B–28356–10	38 – 16
14B–2836A–00	39 – 30

CODIGO Nº	REF. Nº
4KN–2836B–00	23 – 4
5GT–2836B–00	26 – 12
4KN–2836B–10	38 – 6
14B–2836E–00	39 – 32
14B–2836F–00	21 – 54
14B–2836G–00	21 – 59
14B–2836H–00	48 – 9
14B–2836J–00	48 – 13
14B–2836K–00	39 – 14
14B–2836L–00	39 – 15
14B–2836M–10–P2	39 – 35
14B–2836N–10–P2	39 – 46
14B–2836T–00	39 – 36
14B–28371–10	39 – 26
3CV–28372–00	22 – 18
20S–28376–00	44 – 4
14B–2837L–00–P5	38 – 52
14B–2837M–00–P5	38 – 55
14B–28380–30	38 – 1
14B–28386–00	39 – 3
	39 – 8
	39 – 12
	39 – 21
	39 – 27
14B–2838J–00	38 – 50
14B–2838N–00–P5	38 – 20
14B–2838P–00	38 – 51
14B–2838R–00–P5	38 – 35
14B–2838T–00	38 – 21
14B–2838U–00	38 – 36
14B–2838V–00	38 – 25
14B–2838W–00	38 – 40
2SG–28391–20	39 – 6
2SG–28392–20	39 – 11
2SG–2839B–00	39 – 5
	39 – 10
14B–2839K–00–P5	38 – 24
14B–2839L–00–P5	38 – 39
14B–283C1–00	39 – 41
14B–283C2–00	39 – 52
14B–28425–00	21 – 40
14B–28428–10	38 – 2
14B–28429–10	38 – 3
14B–28435–00	21 – 46
14B–2845D–00	38 – 73
14B–2846C–00	38 – 71
14B–2846D–00	38 – 72
4B5–2847F–00	39 – 53

CODIGO Nº	REF. Nº
J44–78248–00	38 – 30
	38 – 45
4D9–81168–00	47 – 27
	47 – 32
14B–81410–00	40 – 2
14B–81450–00	40 – 1
14B–81670–00	47 – 29
14B–81673–00	47 – 3
4C8–81801–01	41 – 2
8FA–8181L–00	41 – 5
14B–8183G–10	41 – 10
4C8–81846–00	41 – 4
4C8–81861–00	41 – 8
14B–81890–00	41 – 1
2C0–81940–00	48 – 31
1ST–81950–00	48 – 29
	48 – 39
5VK–81950–40	48 – 28
5JJ–81952–00	48 – 30
	48 – 40
1D7–81960–01	48 – 25
5VY–82100–00	48 – 18
5SL–82113–01	47 – 14
14B–82116–00	48 – 16
5SL–82119–10	48 – 34
1KB–82122–00	22 – 8
14B–8212B–00	22 – 7
14B–8212C–00	22 – 14
5JJ–82131–00	22 – 11
36Y–82151–00	48 – 32
5JJ–82151–00	48 – 23
5JJ–82151–10	48 – 20
5JW–82151–10	48 – 22
5JJ–82151–20	48 – 21
5JJ–82151–30	48 – 24
14B–82176–20	22 – 9
14B–82309–00	47 – 18
1KB–82310–00	47 – 17
14B–82318–00	10 – 27
2C0–82380–00	11 – 26
	47 – 34
1KB–82386–00	11 – 27
5SL–82511–08	47 – 15
14B–82530–00	48 – 62
14B–82540–01	47 – 19
14B–8255P–20	47 – 13
13S–82566–50	48 – 3
5VU–82576–01	48 – 35

CODIGO Nº	REF. Nº
1KB–82590–40	48 – 19
4XV–82911–10	46 – 1
4XV–82917–01	46 – 8
1KB–83310–00	42 – 1
1KB–83311–00	42 – 5
	42 – 10
	42 – 14
	42 – 18
3D7–83318–10	42 – 4
	42 – 9
	42 – 19
1KB–83320–00	42 – 6
1KB–83330–00	42 – 11
1KB–8333A–00	42 – 2
	42 – 16
1KB–83340–00	42 – 15
1KB–8334A–00	42 – 7
	42 – 12
4GY–83350–00	48 – 27
1KB–83362–00	26 – 17
14B–83371–00	48 – 1
1KB–83500–00	43 – 1
4XV–83513–00	38 – 17
5PW–8352S–00	43 – 4
14B–8353E–00	43 – 2
14B–83572–00	43 – 3
14B–83755–00	47 – 26
5EB–83912–03	46 – 2
5JJ–83913–00	46 – 11
14B–83922–00	35 – 10
4XV–83929–00	46 – 7
2C0–83945–00	46 – 3
5LV–83951–00	46 – 6
14B–83963–00	46 – 14
1KB–83969–00	46 – 12
4HM–83980–00	35 – 11
1KB–84300–01	44 – 1
5PS–84314–00	44 – 2
1KB–84359–00	44 – 8
14B–84396–00	44 – 3
14B–84516–00	45 – 3
14B–84710–00	45 – 1
4HC–84744–00	45 – 6
5VX–84745–01	45 – 5
3Y6–85130–02	45 – 13
14B–85720–00	47 – 22
8CC–85790–01	47 – 2
14B–85870–00	10 – 10

CODIGO Nº	REF. Nº
13S–85884–00	11 – 24
13S–85885–00	11 – 25
8FP–85886–00	47 – 9
5VY–85896–01	47 – 31
1KB–8591A–00	47 – 12
14B–8592A–00	13 – 8
1KB–85970–00	47 – 40
5VY–8A8E0–00	47 – 23
3D9–H3333–10	42 – 3
	42 – 8
	42 – 13
	42 – 17
2S3–W0041–00	35 – 4
14B–W0042–00	37 – 7
5VX–W0046–00	33 – 12
5SL–W0047–00	33 – 5
1J3–W0048–00	31 – 13
	31 – 23
1UY–W0048–00	33 – 16
5VY–W0057–00	33 – 4
5VY–W2470–00	29 – 15
14B–W2587–00	35 – 3
14B–W2838–J0–P3	39 – 17
14B–W2839–J0–P3	39 – 23
1KB–W283G–80–P6	38 – 7
14B–W283U–2C–P6	39 – 2
14B–W283V–2C–P6	39 – 7
14B–W8250–C0	47 – 11
1KB–Y212E–00	21 – 18
14B–YK241–00–P2	28 – 1
90101–08013	24 – 2
90105–06027	1 – 10
90105–06041	35 – 28
90105–06066	6 – 13
90105–06148	48 – 26
90105–06165	14 – 18
90105–06174	39 – 33
90105–06181	14 – 11
90105–06557	26 – 31
90105–07006	5 – 4
90105–08052	38 – 18
90105–08108	26 – 25
90105–10017	24 – 29
	24 – 35
90105–10018	24 – 33
90105–10020	25 – 8
90105–10150	24 – 39
90105–10290	47 – 7

CODIGO Nº	REF. Nº
90105–10397	31 – 25
90105–12062	21 – 2
90105–126A8	40 – 3
90105–14002	30 – 10
90109–06016	41 – 12
90109–06031	36 – 51
90109–06100	14 – 17
90109–06248	23 – 7
90109–06264	36 – 57
90109–066F0	1 – 28
	36 – 30
90109–08174	36 – 18
	36 – 27
90109–08195	47 – 16
90109–085G6	36 – 21
	36 – 31
90110–05028	28 – 29
90110–05030	28 – 27
90110–05047	10 – 12
90110–05067	47 – 21
90110–05112	28 – 22
90110–06156	21 – 30
90110–06161	47 – 28
90110–06163	21 – 17
	21 – 19
	28 – 20
	29 – 9
	39 – 42
	39 – 54
90110–06167	6 – 17
90110–06168	47 – 30
90110–06169	9 – 5
90110–06173	8 – 6
90110–06175	1 – 27
	26 – 19
	47 – 33
90110–06178	15 – 31
90110–06182	6 – 24
	6 – 41
	7 – 2
	8 – 9
	8 – 16
	9 – 13
	40 – 7
90110–06193	10 – 1
90110–06200	13 – 6
90110–06223	16 – 6
90110–06233	28 – 37

CODIGO Nº	REF. Nº
90110–06245	48 – 11
	48 – 15
90110–06256	7 – 15
90110–06258	29 – 4
90110–06315	1 – 18
90110–06340	14 – 24
90110–06343	13 – 20
90110–06378	28 – 16
90110–06387	15 – 4
	15 – 28
90110–06388	15 – 15
	15 – 23
90110–06389	15 – 16
90110–06390	15 – 7
90110–06396	15 – 22
90110–10023	21 – 10
90110–10024	21 – 7
90110–10025	36 – 12
90111–05002	24 – 50
90111–05026	35 – 29
	37 – 22
90111–05034	38 – 27
	38 – 42
	38 – 58
	38 – 60
	38 – 69
	38 – 70
90111–06003	36 – 20
90111–06019	20 – 28
90111–06030	22 – 5
90111–06041	26 – 13
90111–06043	22 – 4
90111–06083	24 – 21
90111–06095	13 – 68
	13 – 73
90111–06119	7 – 63
	48 – 10
90111–06127	13 – 54
	13 – 60
90111–06129	21 – 28
90111–06145	21 – 58
	21 – 63
90111–08066	36 – 48
90111–08071	13 – 44
90111–08073	36 – 8
90116–10048	32 – 16
90116–10051	14 – 12
90119–05015	28 – 45

CODIGO Nº	REF. Nº
90119–06177	7 – 60
90119–06262	28 – 15
90119–09010	14 – 13
90149–06022	6 – 42
90149–06043	31 – 3
90149–06079	9 – 11
90149–06082	14 – 9
	18 – 15
90149–06128	40 – 5
90149–06152	15 – 10
	15 – 20
90149–06156	1 – 11
90149–06158	8 – 14
	15 – 25
	16 – 8
	19 – 13
90149–06302	22 – 10
	24 – 49
90149–08009	33 – 2
90153–06002	6 – 37
90159–06026	17 – 12
90159–06150	48 – 66
90160–05006	38 – 19
	43 – 5
90160–05007	44 – 7
90170–06228	20 – 21
90170–28419	26 – 8
90176–06014	7 – 7
90176–06055	38 – 67
90176–10075	1 – 17
90179–05013	21 – 64
	21 – 65
90179–05523	28 – 46
	38 – 26
	38 – 34
	38 – 41
	38 – 49
90179–08410	13 – 3
90179–10028	21 – 8
	21 – 11
90179–10029	1 – 15
90179–22019	18 – 36
90179–30691	26 – 5
90183–04039	48 – 38
90183–05074	28 – 40
90183–05076	24 – 20
	38 – 13
	47 – 38

CODIGO Nº	REF. Nº
90183–050A0	26 – 16
90183–06069	48 – 14
90183–060A2	13 – 27
	13 – 37
90185–10011	32 – 17
90185–20008	24 – 42
90185–24007	32 – 23
90201–047A2	48 – 37
90201–05021	41 – 7
90201–06071	7 – 34
90201–06074	7 – 35
90201–06589	16 – 5
90201–08057	24 – 4
90201–08080	13 – 16
90201–08082	13 – 48
90201–08103	20 – 26
	37 – 3
90201–081R9	36 – 7
90201–08676	26 – 26
90201–087G2	13 – 43
90201–08M09	26 – 23
90201–10029	17 – 22
90201–10034	47 – 6
90201–10035	1 – 14
	1 – 16
	36 – 10
90201–12008	40 – 4
90201–12575	20 – 8
90201–12790	47 – 1
90201–127E1	20 – 3
90201–146F9	36 – 11
90201–177G4	20 – 13
90201–20026	24 – 43
90201–22015	18 – 35
90201–25020	32 – 24
90201–25291	27 – 16
	27 – 36
90201–257H0	18 – 37
90201–281U8	26 – 9
90201–30016	24 – 45
90201–44008	17 – 33
90202–05180	38 – 28
	38 – 43
	38 – 59
	38 – 61
90202–06005	39 – 13
	39 – 28
90202–30235	26 – 7

CODIGO Nº	REF. Nº
90206–14086	20 – 27
90208–25002	17 – 3
90209–25011	18 – 4
90209–28008	18 – 21
90214–25003	18 – 13
90214–25004	18 – 12
90214–28002	18 – 27
90214–29002	18 – 26
90240–08084	36 – 16
	36 – 25
90269–04025	21 – 22
90269–06001	23 – 6
90269–06008	39 – 1
	39 – 16
	39 – 56
90269–06016	21 – 53
90269–06081	23 – 5
90269–07012	22 – 13
90269–07076	22 – 25
90269–07077	22 – 12
	38 – 31
	38 – 46
	39 – 43
	39 – 55
90282–03005	47 – 5
90338–05010	34 – 20
90338–06018	21 – 57
	21 – 62
	23 – 2
	28 – 61
	28 – 69
	48 – 12
90338–15004	21 – 21
90340–12003	14 – 5
90340–14132	9 – 7
90340–18002	1 – 4
90387–05003	45 – 11
90387–05028	37 – 16
90387–06055	28 – 19
90387–06057	24 – 48
	26 – 15
90387–06066	24 – 16
	24 – 17
	29 – 3
	37 – 31
90387–06112	6 – 40
	13 – 7
90387–06143	28 – 10

CODIGO Nº	REF. Nº
90387–0614M	7 – 23
	7 – 32
90387–06170	13 – 53
	13 – 59
90387–061Y1	21 – 29
90387–06203	28 – 39
90387–06217	13 – 15
	21 – 55
	21 – 60
90387–062X0	24 – 15
90387–06372	7 – 62
90387–064T3	38 – 68
90387–065J6	22 – 3
	39 – 51
90387–06681	7 – 59
90387–06697	36 – 39
	36 – 47
90387–06M16	48 – 65
90387–07717	24 – 22
90387–08005	13 – 11
90387–08021	13 – 51
90387–08039	13 – 46
90387–087L0	13 – 67
	13 – 72
90387–10034	24 – 38
90387–1012A	24 – 31
	24 – 37
90387–1013U	24 – 32
90387–11006	47 – 4
90387–22016	30 – 11
90387–22023	24 – 12
90387–25008	18 – 30
90387–25023	18 – 7
90387–28003	18 – 2
90387–28004	18 – 24
90387–28016	32 – 18
90387–28019	32 – 19
90387–30012	18 – 18
90387–31003	18 – 19
90401–10172	35 – 24
	37 – 26
90401–20008	9 – 1
90413–07023	7 – 45
90430–06014	1 – 12
	6 – 36
90430–10005	35 – 25
	37 – 27
90445–08028	47 – 35

CODIGO Nº	REF. Nº
90445–08036	7 – 55
90445–107A5	48 – 55
90445–19002	36 – 6
90446–15386	37 – 5
90450–22017	7 – 39
90450–35001	6 – 29
	7 – 9
	7 – 17
	7 – 28
90450–38040	6 – 28
	7 – 11
	7 – 13
	7 – 30
90450–45001	13 – 22
	13 – 29
	13 – 39
90450–60004	10 – 3
	10 – 5
90464–09M31	28 – 31
90464–12009	48 – 53
90464–12089	48 – 60
90464–13073	48 – 41
	48 – 42
	48 – 47
	48 – 48
	48 – 50
90464–13077	48 – 46
	48 – 51
	48 – 52
90464–14003	48 – 61
90464–14228	21 – 27
90464–15195	44 – 9
90464–16005	11 – 29
90464–16006	13 – 74
90464–16020	38 – 14
90464–16061	10 – 28
	48 – 44
	48 – 45
90464–20022	26 – 21
90464–21256	48 – 56
90464–28003	12 – 9
90464–36004	48 – 54
90464–47002	44 – 5
90464–59001	48 – 59
90465–08053	47 – 25
90465–10098	48 – 57
	48 – 58
90465–13M11	48 – 43

CODIGO Nº	REF. Nº
90465–13M11	48 – 49
90467–08003	7 – 56
90467–08021	47 – 36
90467–08075	7 – 64
90467–09006	28 – 34
90467–10M04	7 – 57
90467–11044	7 – 48
	7 – 51
90467–11090	7 – 42
	7 – 44
	7 – 47
	7 – 50
90467–12085	37 – 18
90467–120A3	35 – 20
90467–160A2	10 – 14
	10 – 36
90467–17003	12 – 8
90467–180A0	12 – 7
90467–18172	12 – 4
	12 – 6
90467–200A0	6 – 26
	7 – 40
90480–01558	13 – 65
	13 – 70
90480–08005	38 – 23
	38 – 38
	47 – 8
90480–08006	39 – 39
	39 – 49
90480–10542	28 – 8
	28 – 13
90480–11009	45 – 12
90480–12005	24 – 47
90480–12010	6 – 39
90480–12023	28 – 38
90480–12072	22 – 2
90480–12579	13 – 13
90480–12581	13 – 66
	13 – 71
90480–12596	39 – 40
	39 – 50
90480–12607	48 – 64
90480–13010	8 – 4
90480–13567	38 – 74
90480–15363	7 – 22
90501–06022	19 – 3
90501–080A2	19 – 10
90501–12743	36 – 34

CODIGO Nº	REF. Nº
90501–12743	36 – 42
90501–240A2	17 – 11
90506–18008	36 – 5
90506–18021	20 – 1
90506–18022	37 – 4
90508–16041	17 – 21
90508–18134	36 – 15
90508–18135	36 – 24
90508–32141	20 – 10
90520–01001	38 – 32
	38 – 47
90520–03005	38 – 33
	38 – 48
90520–03010	21 – 45
90520–05011	39 – 37
90520–08002	28 – 55
90520–10005	28 – 63
	28 – 71
90520–15001	21 – 51
90520–15004	21 – 52
90520–15010	38 – 15
90520–30004	39 – 20
90560–05N33	28 – 62
	28 – 70
90560–06244	26 – 30
90560–08213	29 – 12
90560–08251	21 – 56
	21 – 61
	39 – 38
	39 – 48
91312–04025	48 – 36
91312–05010	28 – 23
91312–05020	47 – 37
91312–06012	48 – 17
91312–06016	28 – 3
91312–06025	5 – 8
	34 – 19
91312–06035	36 – 37
	36 – 45
91312–06045	6 – 11
91314–06012	6 – 34
91314–06016	37 – 30
91314–08025	34 – 2
	34 – 9
91314–08030	26 – 11
	27 – 42
91314–08035	27 – 20
	27 – 40

CODIGO Nº	REF. Nº
91317–05020	34 – 15
91317–05025	34 – 16
91317–06020	35 – 27
91317–06025	34 – 4
	34 – 11
91317–06030	7 – 33
91401–25015	36 – 17
	36 – 26
91402–16012	37 – 25
91702–06018	37 – 23
91808–16023	1 – 5
	1 – 6
	1 – 7
	1 – 8
	1 – 9
91808–30031	6 – 16
92012–05014	10 – 29
92012–05016	48 – 7
92012–05025	48 – 4
92012–06010	13 – 31
	13 – 41
92012–06016	24 – 14
	24 – 18
92014–06014	47 – 41
92014–08035	13 – 12
92902–04100	35 – 13
92902–04600	35 – 14
92902–06200	37 – 24
92907–05200	45 – 10
92907–08600	17 – 31
93101–18061	25 – 5
93102–12106	20 – 6
93102–15212	17 – 27
93102–40330	18 – 32
93106–28004	24 – 11
93106–28043	30 – 4
93106–40013	32 – 3
	32 – 14
93109–17071	24 – 25
	24 – 28
	25 – 3
93210–04092	14 – 3
93210–06001	41 – 9
93210–06667	6 – 20
	8 – 13
93210–07540	14 – 15
93210–09525	8 – 12
93210–12010	8 – 11

CODIGO Nº	REF. Nº
93210–14003	8 – 8
93210–15566	9 – 4
93210–15620	37 – 10
93210–16325	14 – 26
93210–207A0	14 – 28
93210–21001	47 – 20
93210–22M93	8 – 3
93210–235A1	6 – 22
	6 – 38
	7 – 3
93210–25711	41 – 3
93210–27370	6 – 23
93210–27778	15 – 12
93210–357A2	6 – 18
93210–41N50	27 – 13
	27 – 33
93210–46044	6 – 31
93210–49046	7 – 6
93210–68001	15 – 19
93305–20605	18 – 17
93306–00106	6 – 2
93306–00304	17 – 10
93306–07208	30 – 3
93306–20531	32 – 2
	32 – 13
93306–205A2	18 – 38
93306–20652	18 – 11
93306–27209	18 – 14
93306–80502	19 – 4
93306–97202	24 – 9
93310–23168	17 – 18
93310–24160	16 – 2
93315–21570	17 – 28
93315–31758	24 – 24
	24 – 27
	25 – 2
93317–11096	17 – 30
93317–11295	20 – 5
93317–428U8	24 – 8
93317–43580	32 – 4
93317–52897	24 – 7
93399–99932	26 – 3
93399–99957	26 – 1
93399–999T4	25 – 4
93420–61M07	32 – 5
93440–28184	18 – 5
93440–30113	25 – 7
93440–31187	18 – 22

CODIGO Nº	REF. Nº
93440–52009	18 – 39
93440–62032	18 – 33
93450–18157	3 – 10
93501–04011	36 – 35
	36 – 43
93603–12007	6 – 10
93603–17070	6 – 9
93607–44002	5 – 11
93610–20189	15 – 14
93900–00030	30 – 6
	32 – 10
94112–17111	30 – 5
94119–17072	32 – 9
94580–31082	8 – 1
94582–30120	32 – 25
94591–60126	5 – 5
94682–30031	32 – 26
94701–00424	1 – 19
95022–06008	48 – 33
95022–06016	47 – 24
95022–06020	6 – 15
	20 – 16
95022–06025	6 – 8
95024–06025	6 – 32
95027–06020	46 – 5
95302–06700	41 – 6
	41 – 11
95302–08600	24 – 3
95304–06700	20 – 22
95307–08700	37 – 20
95602–05100	45 – 9
95602–05200	45 – 14
	48 – 5
95602–06200	36 – 38
	36 – 46
95602–08200	26 – 22
95602–10200	24 – 30
	24 – 34
	24 – 36
	24 – 40
	25 – 9
	36 – 9
95602–16200	25 – 11
95607–06200	7 – 37
	46 – 4
95612–08625	1 – 13
95617–06100	35 – 9
95702–06500	22 – 6

CODIGO Nº	REF. Nº
95802–06012	39 – 45
	48 – 2
95802–06016	39 – 31
95812–06040	14 – 21
95812–06050	14 – 20
95812–06060	14 – 19
95812–08040	13 – 42
95812–08045	13 – 47
95812–08060	14 – 16
95812–12080	21 – 3
95814–08035	13 – 25
	13 – 35
95827–06030	7 – 36
97702–50012	38 – 22
	38 – 37
97702–50014	45 – 2
97702–50016	21 – 26
	44 – 6
	47 – 10
97706–04012	45 – 7
98502–04012	35 – 12
98507–04010	46 – 10
98507–05025	46 – 13
98507–05045	46 – 15
98707–03016	46 – 9
98902–05008	28 – 64
	28 – 72
98902–05014	10 – 32
	28 – 47
98902–05020	10 – 35
	45 – 8
99001–07600	17 – 32
99002–10600	20 – 7
99009–10400	17 – 23
99009–12400	6 – 14
99009–17400	20 – 14
99009–42500	24 – 10
99247–00240	39 – 18
	39 – 24
99530–08012	9 – 9
	15 – 3
99530–10014	14 – 4
99530–10114	1 – 30
	2 – 3