YAMAHA

PARTS CATALOGUE

YFM80GX (2D3A) U.S.A.
YFM80GX (2D3B) CANADA

1G2D3-100E1

(2G2D3-100E1)

YAMAHA GENUINE Parts & Accessories

A2

YFM80GX
PARTS CATALOGUE
©2007 by Yamaha Motor Co., Ltd.
1st edition, April 2007
All rights reserved.
Any reprinting or unauthorized use
without the written permission of
Yamaha Motor Co., Ltd.
is expressly prohibited.

A3

FOREWORD

This Parts Catalogue is related to the parts for the model(s) on the cover page. When you are ordering replacement parts, please refer to this Parts Catalogue and quote both part numbers and part names correctly.

1. Modifications or additions which have been made after the issue of the Parts Catalogue will be announced in the Parts News.
   It is advisable that you make the necessary corrections to the Parts Catalogue according to the Parts News.

2. Abbreviations
   The following abbreviations are used in this Parts Catalogue.

   "UR" Use specified parts number.
   "UN" Use as many as needed.
   "AP" Alternate Parts
   "LM" Locally Made (Parts need to be ordered locally)
   "F#" Frame No. (Applicable machine No.)
   "O/S" Over Size

3. The number of components for assembly
   - Parts, which are to be supplied in an assembly, are listed with a dot (.) in front of the part name as shown below.
   - The numeral appearing to the right of each component part indicates the quantity of parts for each assembly unit.

PART NO.	DESCRIPTION	Q'TY	REMARKS
2F5–83310–60	FRONT FLASHER LIGHT ASSY	2	
115–83311–60	.BULB (6V–18W)	1	

4. Applicable colours of graphics are represented in the "REMARKS" as shown below.

PART NO.	DESCRIPTION	Q'TY	REMARKS
2N4–24110–00–X5	FUEL TANK COMP.	2	MXR
3J1–24240–10	.GRAPHIC, FUEL TANK	1	FOR MXR

5. Note that the illustrations for reference in finding parts numbers are not to be used for assembling. When assembling, please use the applicable service manual.

6. The asterisk (*) before a reference number indicates modified items after the first edition.

7. Applicable Serial No.

Engine Serial No.

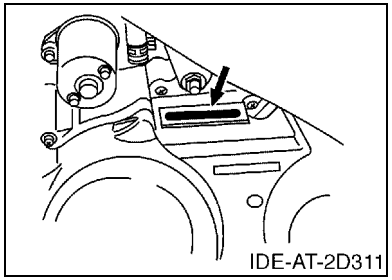

Frame Serial No.

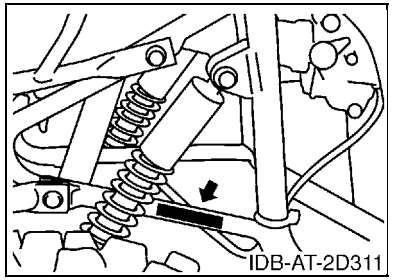

8. Applicable Colour Code (The (*) mark shows Model colour.)

Abbreviation	Colour Name	Colour Code
DPBSN(*)	DARK PURPLISH BLUE SOLID N	0891
PDG(*)	PASTEL DEEP GREEN	00K0
SL	SILVER	0035
YB	YAMAHA BLACK	0033

9. Quantity Column Information

Column No.	Name Of Q’ty Column	Destination
1	USA	U.S.A.
2	CAN	CANADA

MODEL LABEL

(1) A label called “Model Label” is affixed in the location as indicated in (3) below. When using this parts catalogue, please be sure to cross–reference the “model code – production code No.” in the catalogue with the “model code – production code No.” indicated on the Model Label affixed onto the product concerned.

(2) “Model Label” Indication

a b ○ xxxx – xxx ● x c	a: Model Type Code b: Production Code No. c: Colouring Type

○ 4TW1–010 ● A

(3) Model Label Affixing Location

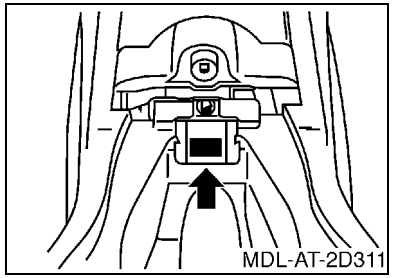

(4) Colouring Information

Model Code	Colouring Type Code	Colour Code	Colour Name	Abbreviation
2D3A	A	00K0	PASTEL DEEP GREEN	PDG
	B	0891	DARK PURPLISH BLUE SOLID N	DPBSN
2D3B	A	00K0	PASTEL DEEP GREEN	PDG
	B	0891	DARK PURPLISH BLUE SOLID N	DPBSN

(5) Model Code – Production Code Number of Model Listed in This Parts Catalogue

Model Code	Production Code No.	Country (destination)	Model Code	Production Code No.	Country (destination)
2D3A	010	U.S.A.			
2D3B	010	CANADA			

CONTENTS

ENGINE

CYLINDER B2
CRANKSHAFT & PISTON B3
VALVE B4
CAMSHAFT & CHAIN B5
OIL PUMP B6
INTAKE B7
EXHAUST B9
CRANKCASE B10
CRANKCASE COVER 1 ..... B11
STARTER CLUTCH B12
CLUTCH B13
TRANSMISSION B15
MIDDLE DRIVE GEAR C2
SHIFT CAM & FORK C3
SHIFT SHAFT C4

CHASSIS

FRAME C5
FRONT FENDER C6
REAR FENDER C8
REAR ARM C9
DRIVE SHAFT C10
REAR SUSPENSION C12
STEERING C13
FRONT SUSPENSION & WHEEL C15
FUEL TANK D2
SEAT D3
FRONT WHEEL D4
REAR WHEEL D6
STEERING HANDLE & CABLE D8
STAND & FOOTREST D10
GUARD D11
GENERATOR D12
STARTING MOTOR D13
HANDLE SWITCH & LEVER D14
ELECTRICAL 1 ..... D15
ELECTRICAL 2 ..... E3
EMBLEM & LABEL 1 ..... E4
EMBLEM & LABEL 2 ..... E5

INDEX

NUMERICAL INDEX M1

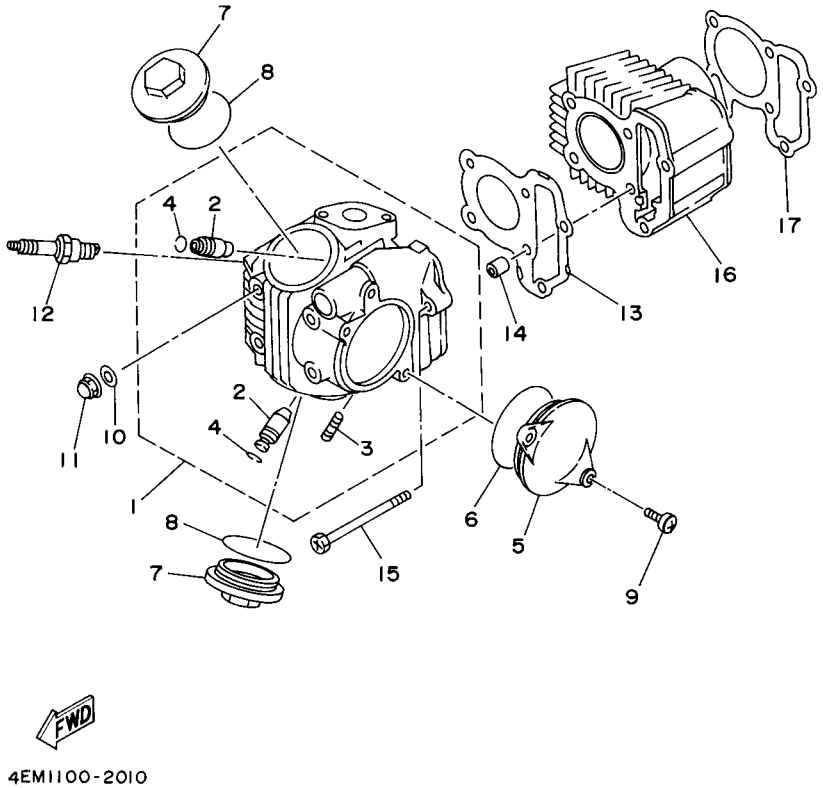

FIG. 1 CYLINDER

REF. NO.	PART NO.	DESCRIPTION	USA	CAN				REMARKS
1	35T–11110–01	CYLINDER HEAD ASSY	1	1				
2	22F–11134–10	.GUIDE, VALVE 2	2	2				
3	22F–14651–00	.BOLT, STUD	2	2				
4	93440–10109	.CIRCLIP	2	2				
5	22F–11185–10	COVER, CYLINDER HEAD SIDE 1	1	1				
6	93210–63556	O-RING	1	1				
7	22F–11186–10	COVER, CYLINDER HEAD SIDE 2	2	2				
8	93210–44704	O-RING	2	2				
9	98502–06016	SCREW, PAN HEAD	2	2				
10	90201–066F0	WASHER, PLATE	4	4				
11	90176–06014	NUT, CROWN	4	4				
12	94701–00366	PLUG, SPARK (NGK CR7HSA)	1	1				
13	55X–11181–00	GASKET, CYLINDER HEAD 1	1	1				
14	99530–08012	PIN, DOWEL	2	2				
15	95022–06085	BOLT, FLANGE	2	2				
16	22K–11311–02	CYLINDER 1	1	1				
17	22F–11351–01	GASKET, CYLINDER	1	1				

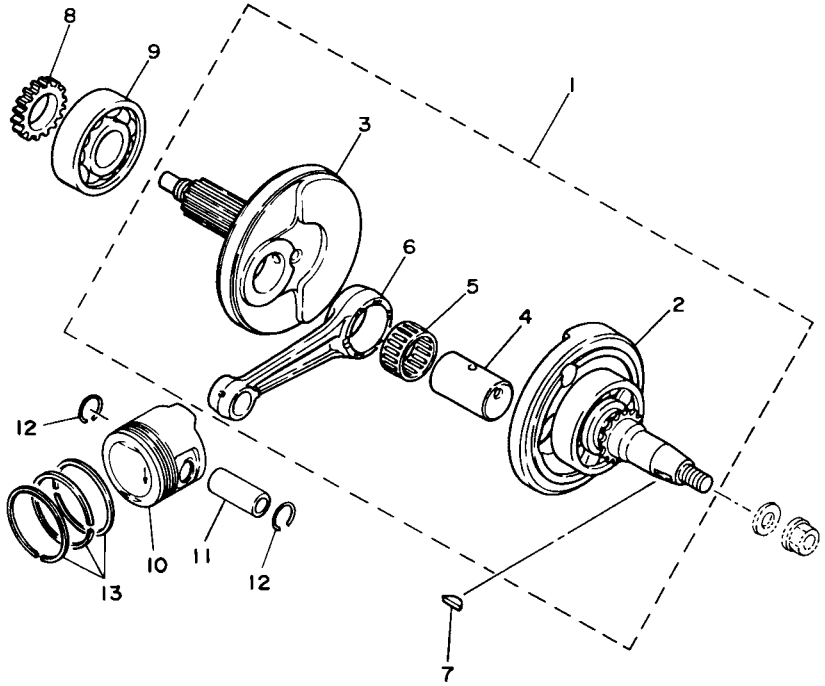

55X110-5020

FIG. 2 CRANKSHAFT & PISTON

REF. NO.	PART NO.	DESCRIPTION	USA	CAN				REMARKS
1	22K–11400–01	CRANKSHAFT ASSY	1	1				
2	22K–W1141–00	.CRANK SUB ASSY 1	1	1				
3	22K–11422–00	.CRANK 2	1	1				
4	22F–11681–00	.PIN, CRANK 1	1	1				
5	93311–32353	.BEARING	1	1				
6	22K–11651–02	.ROD, CONNECTING	1	1				
7	90280–03017	KEY, WOODRUFF	1	1				
8	46J–13324–00	GEAR, PUMP DRIVE	1	1				
9	93306–30433	BEARING	1	1				
10	55X–11631–00–96	PISTON (STD)	1	1				
	55X–11636–00	PISTON (0.50MM O/S)	1	1				AP
	55X–11638–00	PISTON (1.00MM O/S)	1	1				AP
11	22K–11633–01	PIN, PISTON	1	1				
12	93450–14088	CIRCLIP	2	2				
13	55X–11610–00	PISTON RING SET (STD)	1	1				
	55X–11610–20	PISTON RING SET (0.50MM O/S)	1	1				AP
	55X–11610–40	PISTON RING SET (1.00MM O/S)	1	1				AP

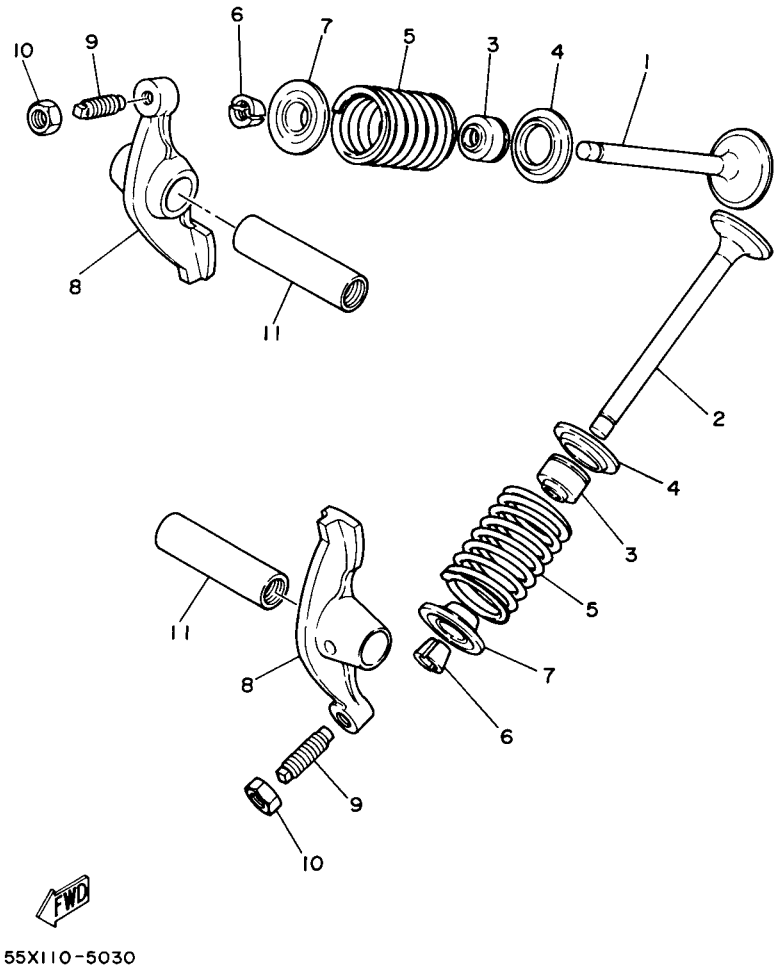

FIG. 3 VALVE

REF. NO.	PART NO.	DESCRIPTION	USA	CAN				REMARKS
1	2D3–12111–00	VALVE, INTAKE	1	1				
2	2D3–12121–00	VALVE, EXHAUST	1	1				
3	2HX–12119–00	SEAL, VALVE STEM	2	2				
4	22F–12116–00	SEAT, VALVE SPRING	2	2				
5	22F–12114–00	SPRING, VALVE OUTER	2	2				
6	22F–12118–01	COTTER, VALVE	4	4				
7	22F–12117–02	RETAINER, VALVE SPRING	2	2				
8	22F–12151–10	ARM, VALVE ROCKER	2	2				
9	22F–12159–00	SCREW, VALVE ADJUSTING	2	2				
10	90170–05302	NUT	2	2				
11	22F–12156–00	SHAFT, ROCKER 2	2	2				

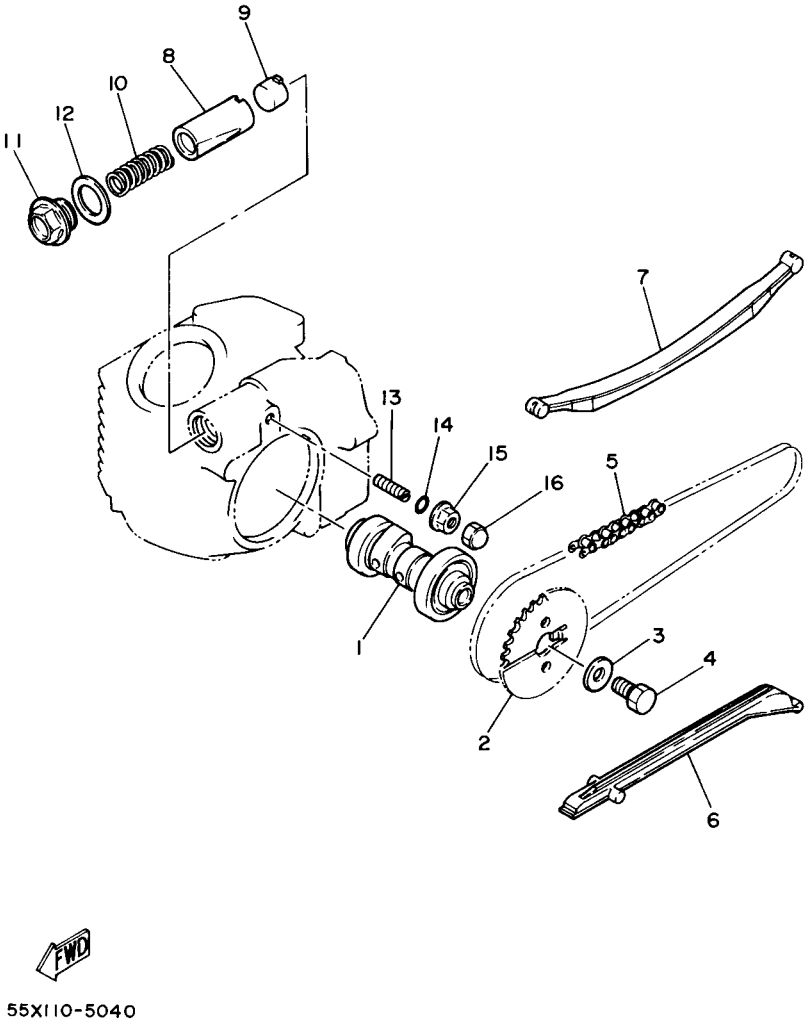

FIG. 4 CAMSHAFT & CHAIN

REF. NO.	PART NO.	DESCRIPTION	USA	CAN				REMARKS
1	55X–12170–00	CAMSHAFT ASSY 1	1	1				
2	50M–12176–00	SPROCKET, CAM CHAIN (28T)	1	1				
3	90201–08048	WASHER, PLATE	1	1				
4	90101–08055	BOLT	1	1				
5	94580–25082	CHAIN (D.I.D 25)	1	1				
6	22F–12231–01	GUIDE, STOPPER 1	1	1				
7	22F–12241–00	GUIDE, STOPPER 2	1	1				
8	22F–12217–01	ROD, CHAIN TENSIONER	1	1				
9	90334–14037	PLUG, STRAIGHT	1	1				
10	90501–10710	SPRING, COMPRESSION	1	1				
11	90340–18092	PLUG, STRAIGHT SCREW	1	1				
12	90201–186F1	WASHER, PLATE	1	1				
13	90113–06009	BOLT, SET	1	1				
14	93210–06564	O-RING	1	1				
15	90179–06054	NUT	1	1				
16	95302–06800	NUT, CROWN	1	1				

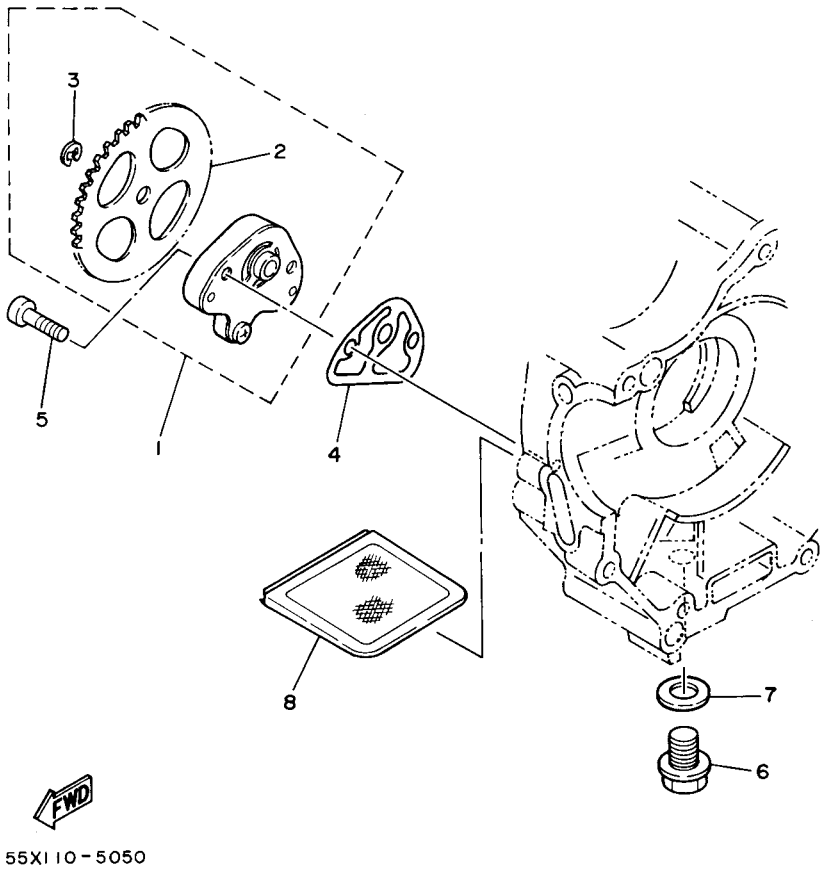

FIG. 5 OIL PUMP

REF. NO.	PART NO.	DESCRIPTION	USA	CAN				REMARKS
1	2FJ–13300–00	OIL PUMP ASSY	1	1				
2	46J–13325–00	.GEAR, PUMP DRIVEN	1	1				
3	99001–05600	.CIRCLIP	1	1				
4	22F–13329–01	GASKET, PUMP COVER	1	1				
5	90155–06001	SCREW, FLAT FILLISTER	2	2				
6	90340–12097	PLUG, STRAIGHT SCREW	1	1				
7	812–11198–00	GASKET	1	1				
8	22F–13411–01	STRAINER, OIL	1	1				

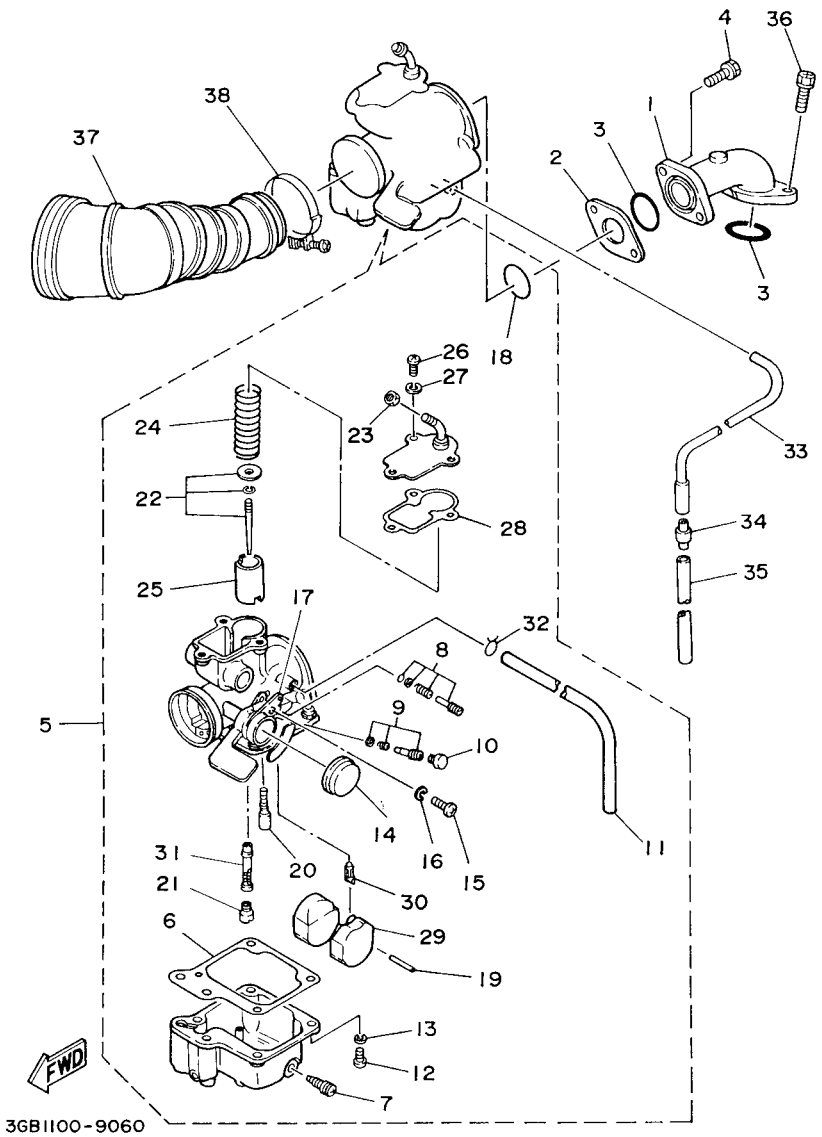

FIG. 6 INTAKE

REF. NO.	PART NO.	DESCRIPTION	USA	CAN				REMARKS
1	55X–13586–00	JOINT, CARBURETOR 1	1	1				
2	22K–13595–00	JOINT	1	1				
3	93210–25552	O-RING	2	2				
4	90159–06041	SCREW, WITH WASHER	2	2				
5	5TH–14101–11	CARBURETOR ASSY 1	1	1				
6	22F–14184–00	.GASKET, FLOAT CHAMBER	1	1				
7	12R–14191–00	.PLUG, DRAIN	1	1				
8	22F–14103–00	.THROTTLE SCREW SET	1	1				
9	22K–14104–00	.AIR SCREW SET	1	1				
10	22F–14991–00	.CAP	1	1				
11	26H–14197–00	.PIPE	1	1				
12	98502–04014	.SCREW, PAN HEAD	4	4				
13	92902–04100	.WASHER, SPRING	4	4				
14	22F–14169–00	.CAP	1	1				
15	98502–04008	.SCREW, PAN HEAD	1	1				
16	92902–04100	.WASHER, SPRING	1	1				
17	55X–14146–00	.PLATE	1	1				
18	22K–14147–00	.O-RING	1	1				
19	127–14186–00	.PIN, FLOAT	1	1				
20	22F–14142–12	.JET, PILOT (#12.5)	1	1				
21	18A–1414E–30	.JET, MAIN(#76.3)	1	1				
22	2HX–1490J–10	.NEEDLE SET	1	1				
23	802–14161–00	.NUT, CABLE ADJUSTING	1	1				
24	260–14131–00	.SPRING, THROTTLE VALVE	1	1				
25	2HX–14112–35	.VALVE, THROTTLE 1	1	1				
26	98502–04010	.SCREW, PAN HEAD	3	3				
27	92902–04100	.WASHER, SPRING	3	3				

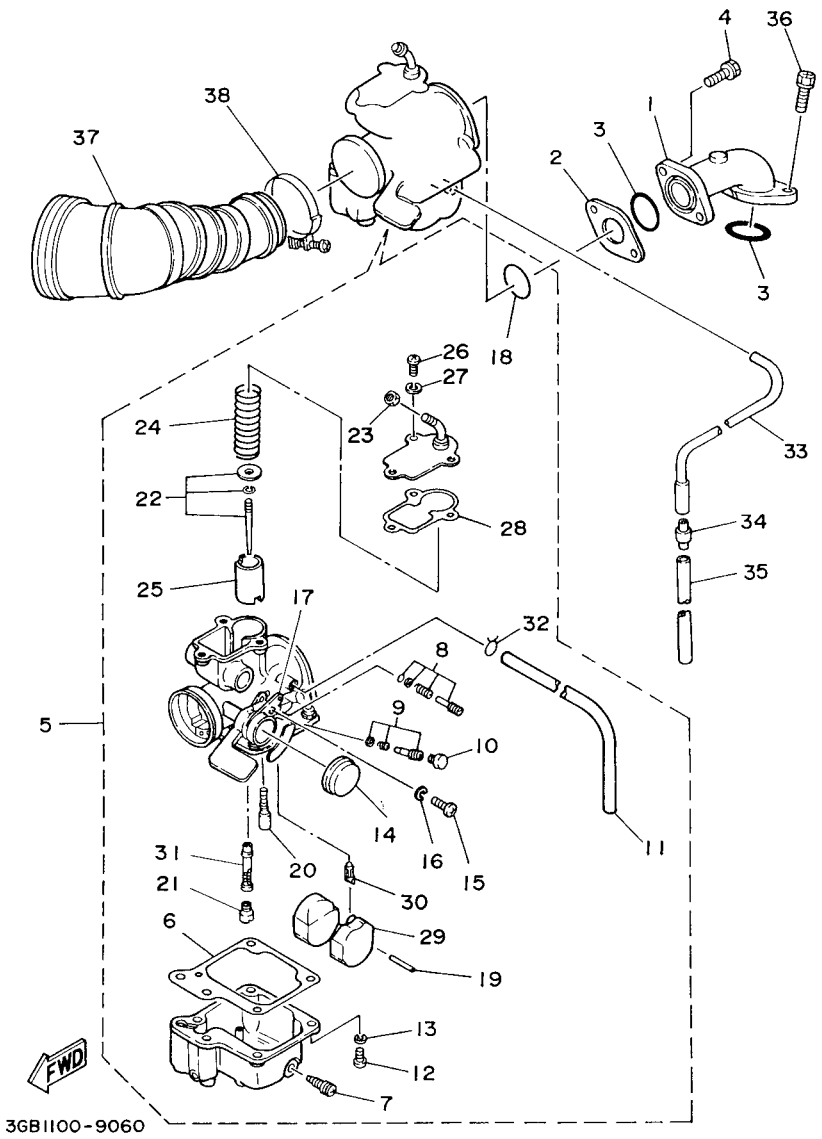

FIG. 6 INTAKE

REF. NO.	PART NO.	DESCRIPTION	USA	CAN				REMARKS
28	55X–14198–00	.GASKET	1	1				
29	22F–14185–00	.FLOAT	1	1				
30	22F–14150–00	.NEEDLE ASSY	1	1				
31	4EM–14141–78	.NOZZLE, MAIN	1	1				
32	55X–14937–00	.CLIP	1	1				
33	55X–14196–00	PIPE	1	1				
34	24W–14193–00	PIPE	1	1				
35	91A20–07010	TUBE, FLEXIBLE VINYL	1	1				
36	90159–06041	SCREW, WITH WASHER	2	2				
37	3GB–14453–00	JOINT, AIR CLEANER 1	1	1				
38	90460–43053	CLAMP, HOSE	1	1				

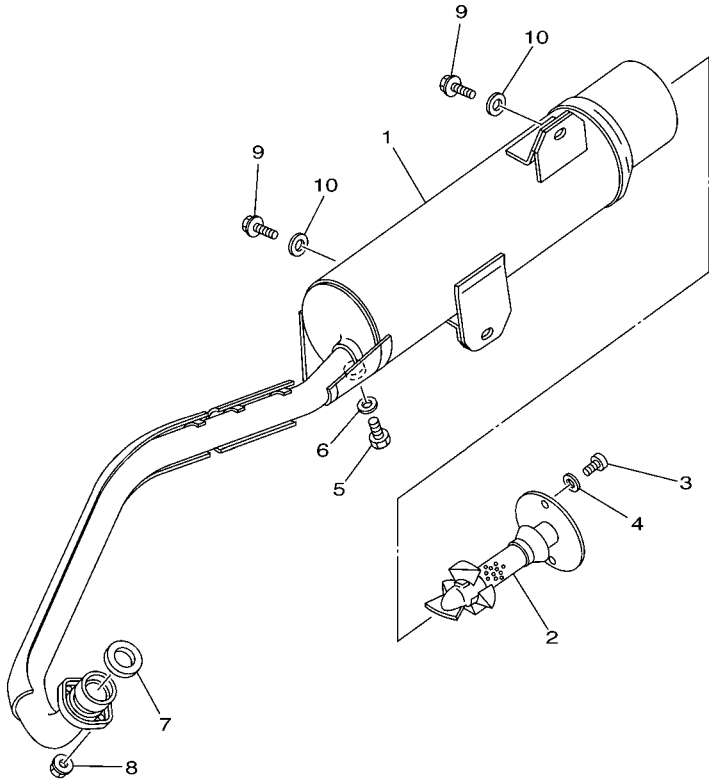

5TH1100-2070

FIG. 7 EXHAUST

REF. NO.	PART NO.	DESCRIPTION	USA	CAN				REMARKS
1	5TH–14711–00	MUFFLER 1	1	1				
2	55X–14752–00	PIPE, OUTLET	1	1				
3	98502–06010	SCREW, PAN HEAD	2	2				
4	92902–06600	WASHER, PLATE	2	2				
5	90101–06576	BOLT	1	1				
6	92902–06600	WASHER, PLATE	1	1				
7	3DM–14613–00	GASKET, EXHAUST PIPE	1	1				
8	95702–06500	NUT, WITH WASHER	2	2				
9	95812–08016	BOLT, FLANGE	2	2				
10	90201–08048	WASHER, PLATE	2	2				

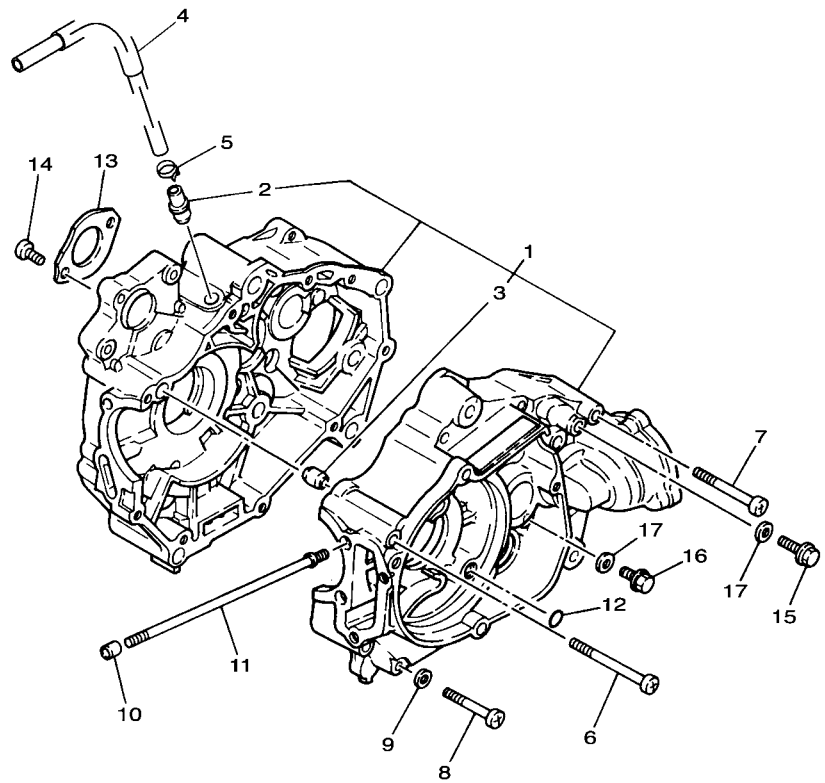

2D31100-D080

FIG. 8 CRANKCASE

REF. NO.	PART NO.	DESCRIPTION	USA	CAN				REMARKS
1	2FJ–15100–01	CRANKCASE ASSY	1	1				
2	59V–11167–00	.PIPE, BREATHER 2	1	1				
3	99530–12016	.PIN, DOWEL	2	2				
4	2D3–11166–00	PIPE, BREATHER 1	1	1				
5	90467–13064	CLIP	1	1				
6	98502–06075	SCREW, PAN HEAD	1	1				
7	98502–06060	SCREW, PAN HEAD	2	2				
8	98502–06045	SCREW, PAN HEAD	6	6				
9	90430–06014	GASKET	2	2				
10	99530–08012	PIN, DOWEL	2	2				
11	90116–06042	BOLT, STUD	4	4				
12	93210–06564	O-RING	2	2				
13	22F–15383–01	PLATE, BEARING COVER	1	1				
14	98502–06012	SCREW, PAN HEAD	2	2				
15	95812–06025	BOLT, FLANGE	2	2				
16	95812–06016	BOLT, FLANGE	1	1				
17	90430–06166	GASKET	3	3				

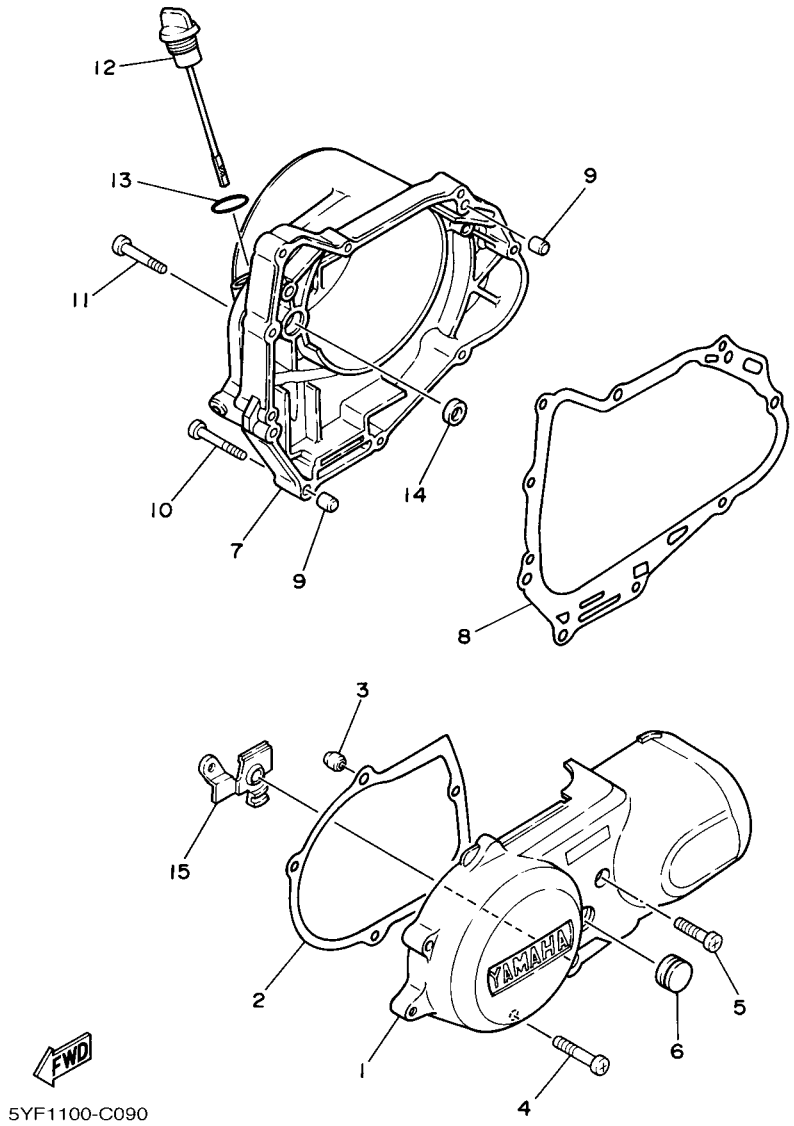

FIG. 9 CRANKCASE COVER 1

REF. NO.	PART NO.	DESCRIPTION	USA	CAN				REMARKS
1	22F–15411–01	COVER, CRANKCASE 1	1	1				
2	3GB–15451–00	GASKET, CRANKCASE COVER 1	1	1				
3	99530–10114	PIN, DOWEL	2	2				
4	98502–06040	SCREW, PAN HEAD	1	1				
5	98502–06030	SCREW, PAN HEAD	2	2				
6	22F–15417–00	COVER, CAP	1	1				
7	2FJ–15421–00	COVER, CRANKCASE 2	1	1				
8	3GB–15461–00	GASKET, CRANKCASE COVER 2	1	1				
9	99530–10120	PIN, DOWEL	2	2				
10	98502–06045	SCREW, PAN HEAD	1	1				
11	98502–06035	SCREW, PAN HEAD	8	8				
12	55X–15362–04	PLUG, OIL LEVEL	1	1				
13	93210–19123	O-RING	1	1				
14	93101–10142	OIL SEAL	1	1				
15	90209–11269	WASHER	1	1				

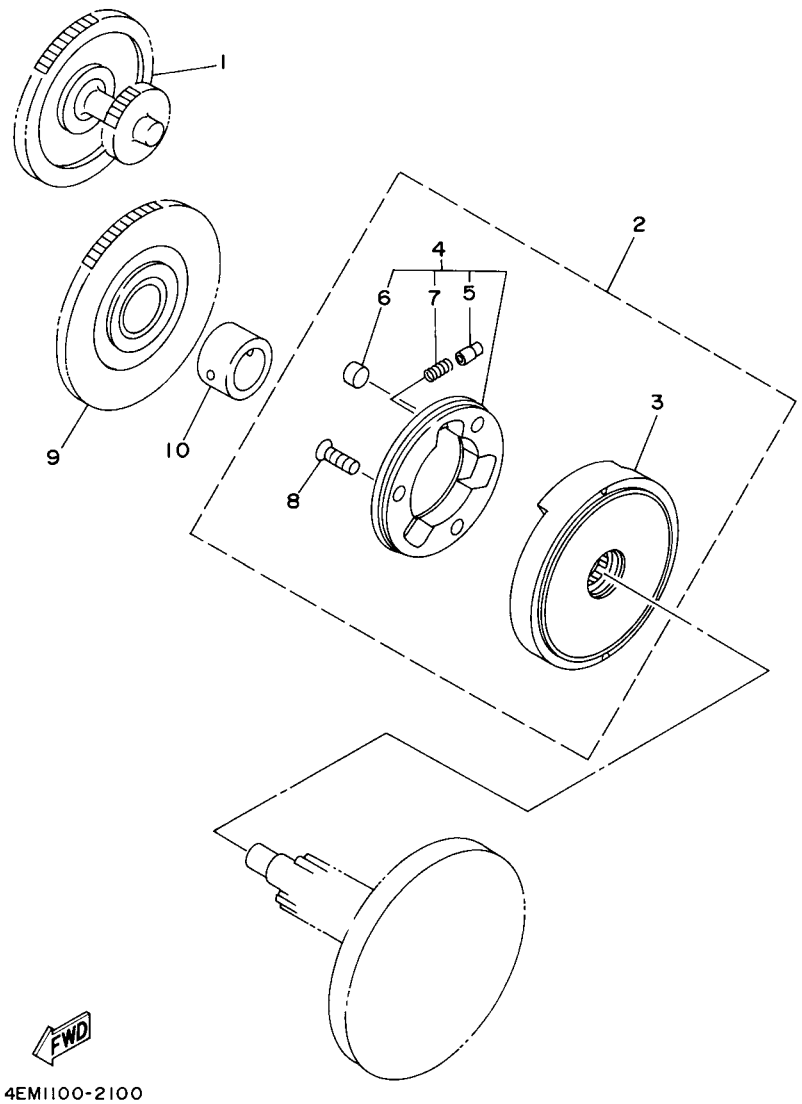

FIG. 10 STARTER CLUTCH

REF. NO.	PART NO.	DESCRIPTION	USA	CAN				REMARKS
1	2HX–15520–00	STARTER WHEEL ASSY	1	1				
2	22M–15570–10	STARTER CLUTCH ASSY	1	1				
3	22M–13450–10	.ROTARY FILTER ASSY	1	1				
4	22M–15580–10	.STARTER CLUTCH OUTER ASSY	1	1				
5	3AY–15583–00	..CAP, STARTER CLUTCH SPRING	3	3				
6	93610–10174	..PIN, DOWEL	3	3				
7	90501–03799	..SPRING, COMPRESSION	3	3				
8	98701–06018	.SCREW, FLAT HEAD	3	3				
9	2HX–15517–10	GEAR, IDLER 2	1	1				
10	90560–20196	SPACER	1	1				

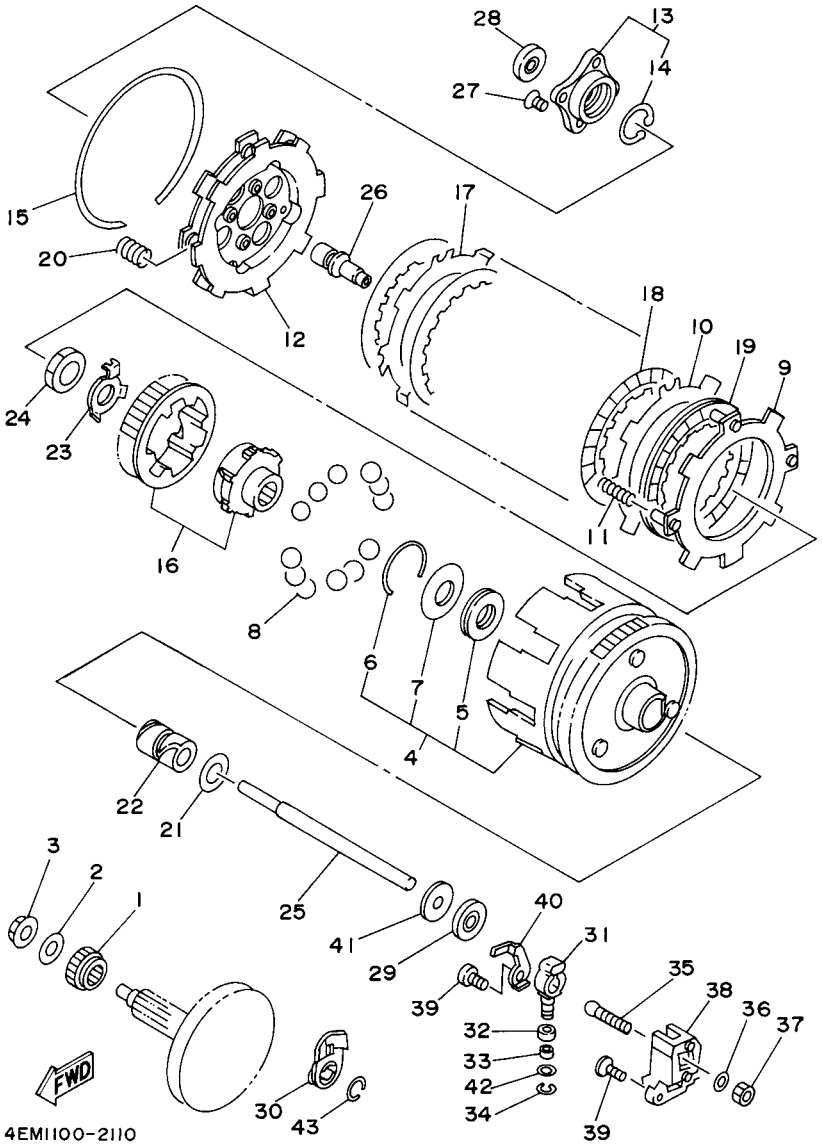

FIG. 11 CLUTCH

REF. NO.	PART NO.	DESCRIPTION	USA	CAN				REMARKS
1	22K–16111–00	GEAR, PRIMARY DRIVE	1	1				
2	90208–12015	WASHER, CONICAL SPRING	1	1				
3	90179–12007	NUT	1	1				
4	3GB–16150–00	PRIMARY DRIVEN GEAR COMP.	1	1				
5	93341–22302	.BEARING	1	1				
6	93450–42112	.CIRCLIP	1	1				
7	22F–16153–40	.WASHER, THRUST (1.7T)	1	1				
8	93505–08030	BALL	12	12				
9	22K–16520–00	PLATE, THRUST WEIGHT	1	1				
10	517–16524–10	PLATE, CLUTCH 1 (1.2T)	4	4				UR
	517–16524–20	PLATE, CLUTCH 1 (1.4T)	4	4				UR
	517–16524–30	PLATE, CLUTCH 1 (1.6T)	4	4				UR
11	90501–105A5	SPRING, COMPRESSION	4	4				
12	22F–16550–00	PRESSURE PLATE ASSY	1	1				
13	22K–16590–00	PUSH PLATE ASSY	1	1				
14	93420–26077	.CIRCLIP	1	1				
15	93451–08094	CIRCLIP	1	1				
16	22K–W1657–00	CLUTCH BOSS SET	1	1				
17	22F–16524–01	PLATE, CLUTCH 1	1	1				
18	3E5–16521–00	PLATE, FRICTION	5	5				
19	22F–16521–00	PLATE, FRICTION	1	1				
20	90501–135A4	SPRING, COMPRESSION	8	8				
21	122–16164–00	PLATE, THRUST 2	1	1				
22	90560–17146	SPACER	1	1				
23	90215–14249	WASHER, LOCK	1	1				
24	90170–14284	NUT	1	1				
25	22F–16357–01	ROD, PUSH 2	1	1				

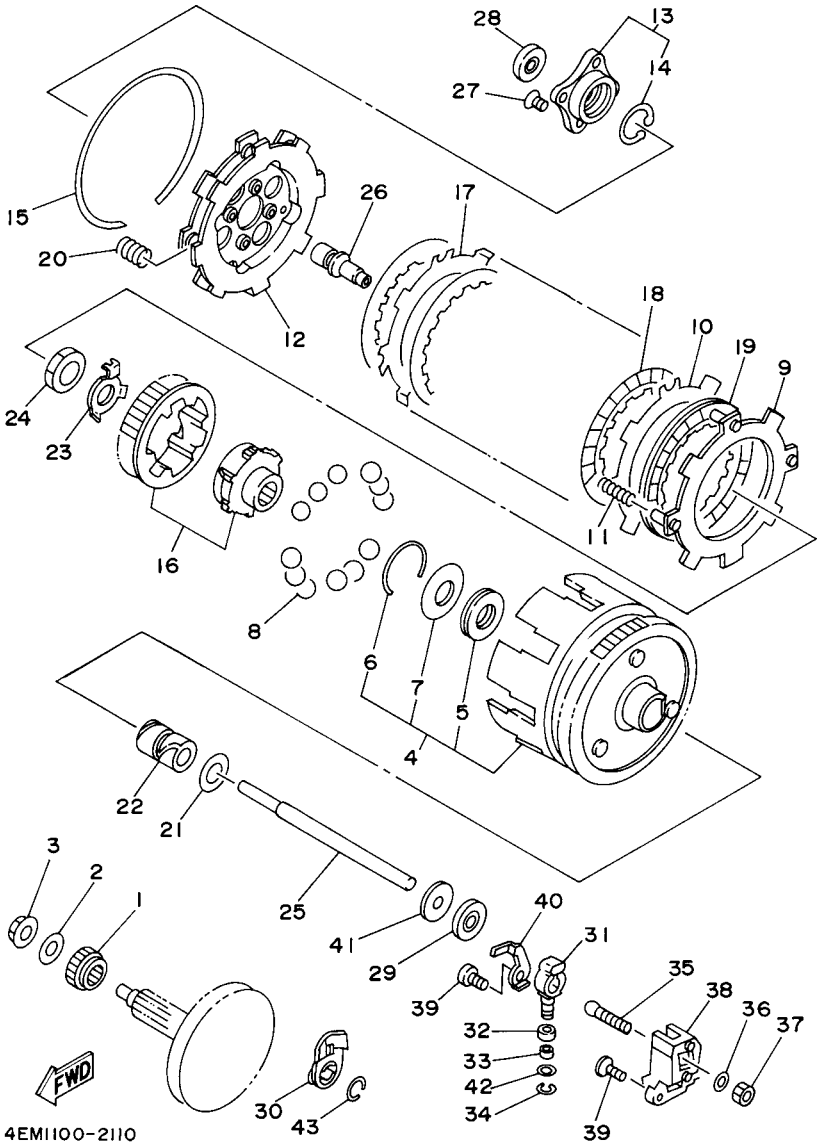

FIG. 11 CLUTCH

REF. NO.	PART NO.	DESCRIPTION	USA	CAN				REMARKS
26	22K–16356–00	ROD, PUSH 1	1	1				
27	90151–06070	SCREW, COUNTERSUNK	4	4				
28	93104–10076	OIL SEAL	1	1				
29	93102–07292	OIL SEAL	1	1				
30	22F–16362–01	LEVER, PUSH 2	1	1				
31	22F–16342–01	LEVER, PUSH	1	1				
32	90387–062G9	COLLAR	1	1				
33	90387–062G8	COLLAR	1	1				
34	99001–04600	CIRCLIP	1	1				
35	22F–16382–00	AXLE, PUSH LEVER	1	1				
36	92902–06600	WASHER, PLATE	1	1				
37	95302–06600	NUT	1	1				
38	22F–16399–00	GUIDE, PUSH ROD	1	1				
39	98502–06016	SCREW, PAN HEAD	2	2				
40	22F–16383–00	SPRING, CLUTCH BOSS	1	1				
41	90380–07118	BUSH, SOLID	1	1				
42	22F–16163–00	WASHER, THRUST 2	1	1				
43	93440–11128	CIRCLIP	1	1				

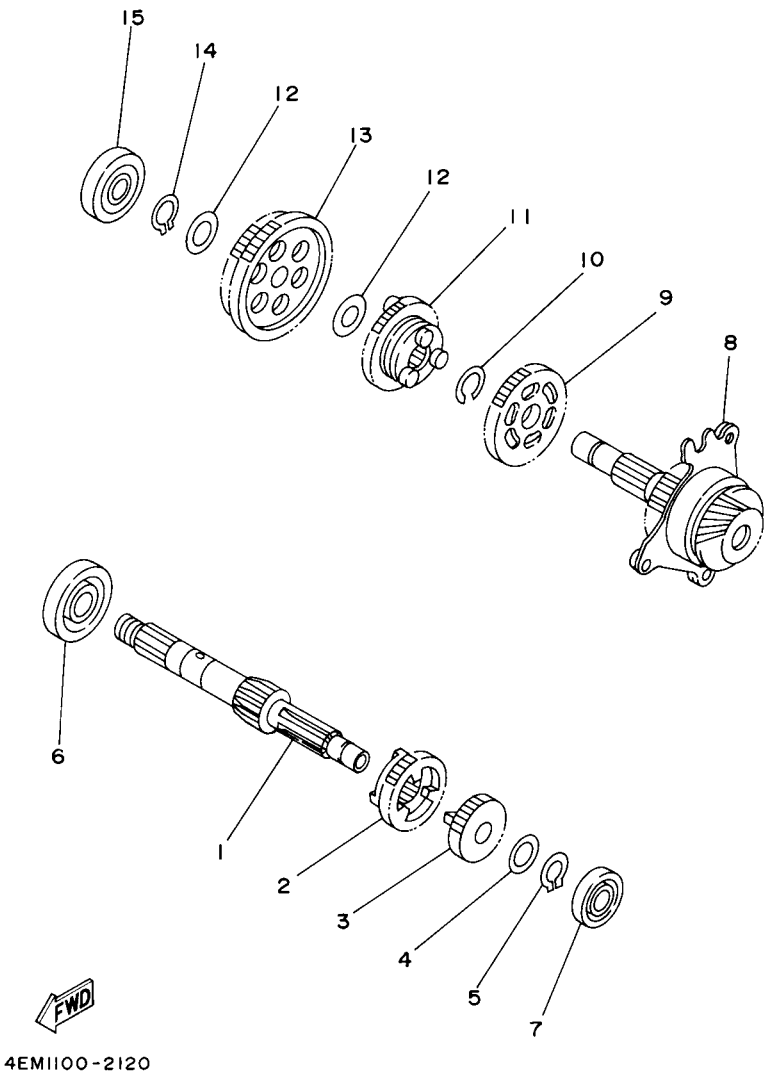

FIG. 12 TRANSMISSION

REF. NO.	PART NO.	DESCRIPTION	USA	CAN				REMARKS
1	2HX–17411–01	AXLE, MAIN	1	1				
2	55X–17131–00	GEAR, 3RD PINION (22T)	1	1				
3	2HX–17121–00	GEAR, 2ND PINION (17T)	1	1				
4	90201–124F8	WASHER, PLATE	1	1				
5	99009–12400	CIRCLIP	1	1				
6	93306–20301	BEARING	1	1				
7	93306–00105	BEARING	1	1				
8	3GB–17402–00	DRIVE AXLE ASSY	1	1				
9	55X–17231–00	GEAR, 3RD WHEEL (31T)	1	1				
10	93440–16089	CIRCLIP	1	1				
11	55X–17241–00	GEAR, 4TH WHEEL (27T)	1	1				
12	90201–132G5	WASHER, PLATE	2	2				
13	3GB–17211–00	GEAR, 1ST WHEEL (39T)	1	1				
14	99009–12400	CIRCLIP	1	1				
15	93306–30101	BEARING	1	1				

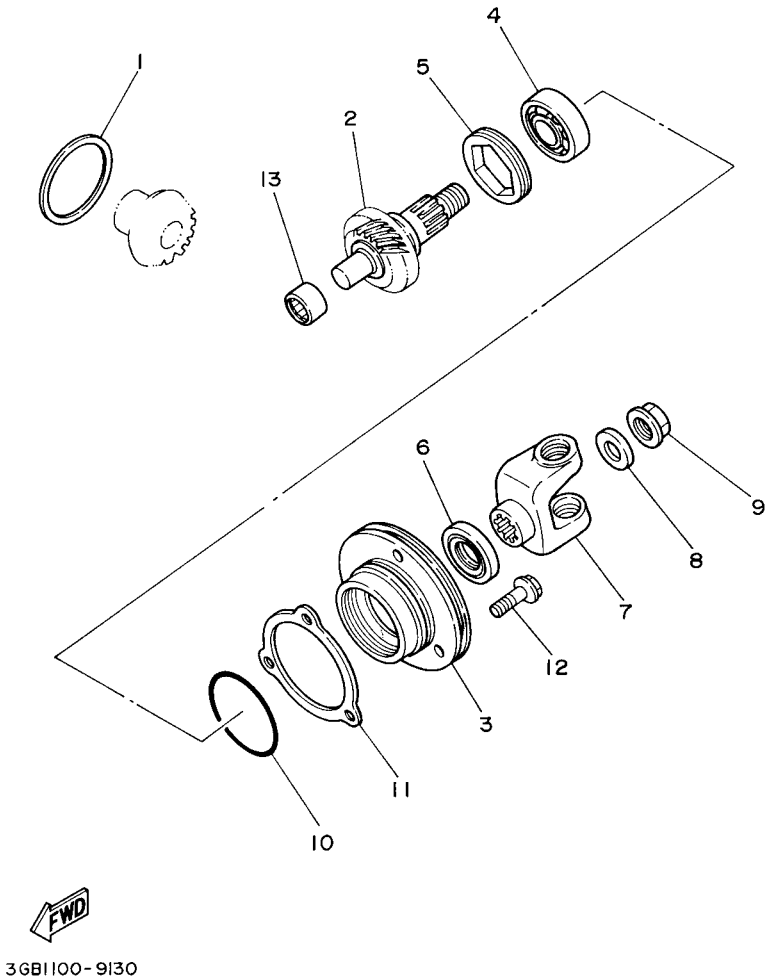

FIG. 13 MIDDLE DRIVE GEAR

REF. NO.	PART NO.	DESCRIPTION	USA	CAN				REMARKS
1	22F–17537–00	SHIM, THRUST	1	1				
2	3GB–17508–00	MIDDLE DRIVEN GEAR COMP.	1	1				
3	22F–17551–00	HOUSING, BEARING	1	1				
4	93306–20309	BEARING	1	1				
5	90179–42480	NUT	1	1				
6	93101–24110	OIL SEAL	1	1				
7	22F–17556–01	YOKE, JOINT	1	1				
8	90201–125F7	WASHER, PLATE	1	1				
9	90179–12004	NUT	1	1				
10	93210–50553	O-RING	1	1				
11	22F–17531–00–15	SHIM, PINION (0.15T)	1	1				UR
	22F–17531–00–30	SHIM, PINION (0.30T)	1	1				UR
	22F–17531–00–50	SHIM, PINION (0.50T)	1	1				UR
12	95822–06020	BOLT, FLANGE	3	3				
13	93317–21236	BEARING	1	1				

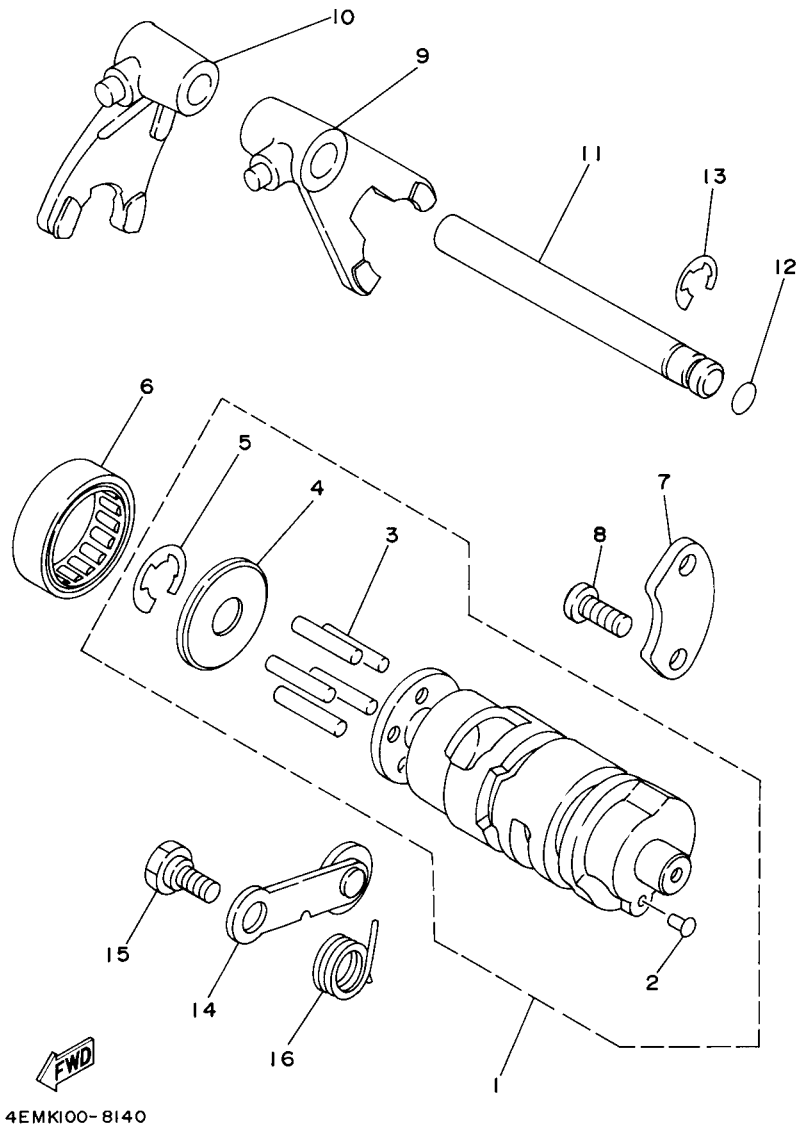

FIG. 14 SHIFT CAM & FORK

REF. NO.	PART NO.	DESCRIPTION	USA	CAN				REMARKS
1	4EM–18540–00	SHIFT CAM ASSY	1	1				
2	136–18542–00	.POINT, NEUTRAL	1	1				
3	93604–22050	.PIN, DOWEL	5	5				
4	296–18561–00	.PLATE, SIDE 1	1	1				
5	99001–09600	.CIRCLIP	1	1				
6	93315–23208	BEARING	1	1				
7	22F–18562–01	PLATE, STOPPER 2	1	1				
8	98502–06014	SCREW, PAN HEAD	2	2				
9	2MK–18511–00	FORK, SHIFT 1	1	1				
10	29F–18512–00	FORK, SHIFT 2	1	1				
11	22F–18531–00	BAR, SHIFT FORK GUIDE 1	1	1				
12	93210–07003	O-RING	1	1				
13	93430–08007	CIRCLIP	1	1				
14	29F–18140–00	STOPPER LEVER ASSY	1	1				
15	90109–06238	BOLT	1	1				
16	90508–20576	SPRING, TORSION	1	1				

FIG. 15 SHIFT SHAFT

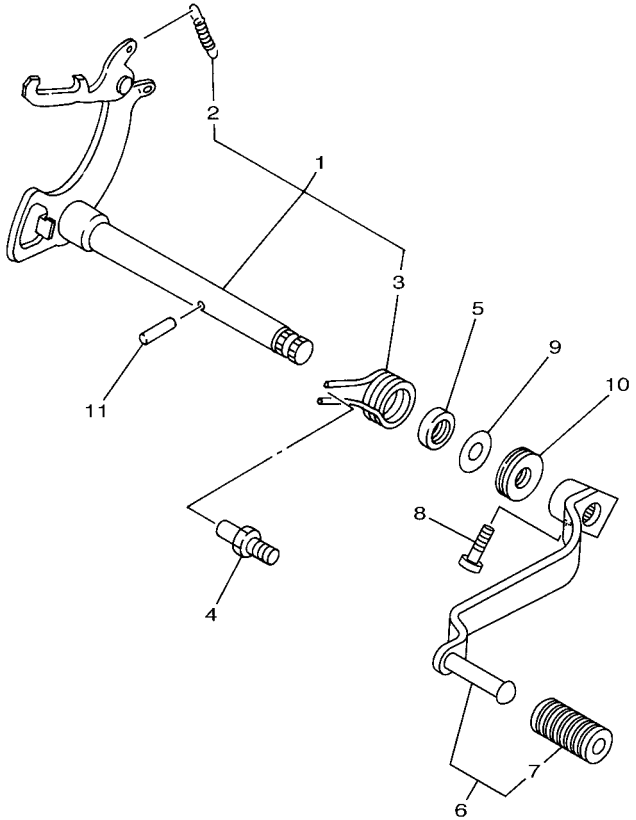

2D31100-D150

REF. NO.	PART NO.	DESCRIPTION	USA	CAN				REMARKS
1	22F–18101–03	SHIFT SHAFT ASSY	1	1				
2	90506–08122	.SPRING, TENSION	1	1				
3	90508–32563	.SPRING, TORSION	1	1				
4	278–18127–01	STOPPER, SCREW	1	1				
5	93102–12106	OIL SEAL (SD 12-22-5 HS)	1	1				
6	2D3–18110–10	SHIFT PEDAL ASSY	1	1				
7	132–18113–01	.COVER, SHIFT PEDAL	1	1				
8	97022–06020	BOLT	1	1				
9	90201–127F4	WASHER, PLATE	1	1				
10	93340–21209	BEARING	1	1				
11	93604–20156	PIN, DOWEL	1	1				

FIG. 16 FRAME

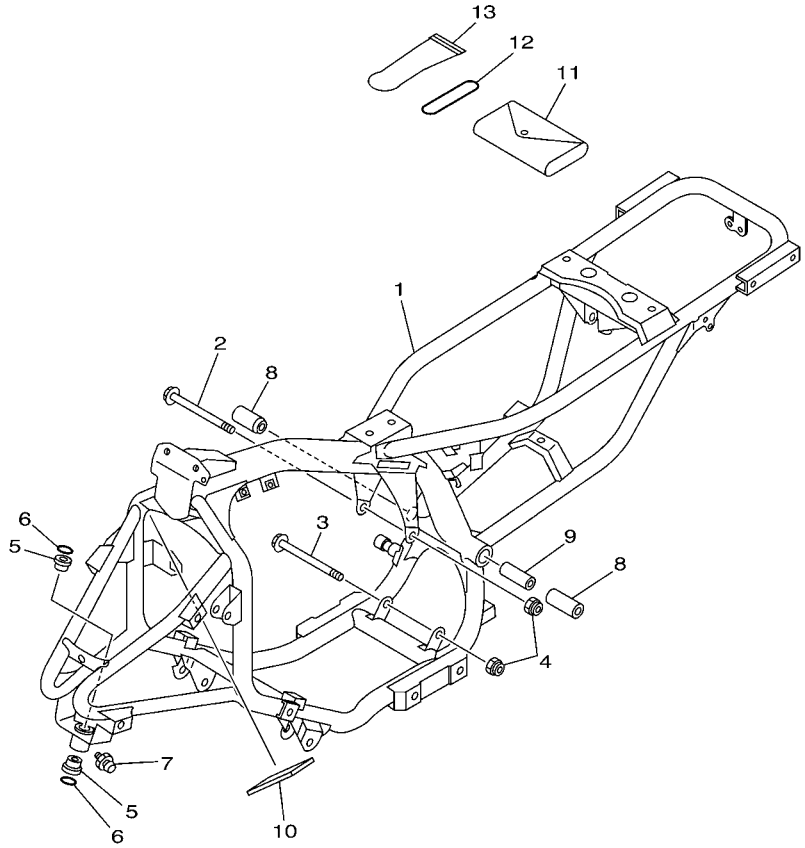

2D34100-E160

REF. NO.	PART NO.	DESCRIPTION	USA	CAN				REMARKS
1	2D3–21110–10	FRAME COMP.	1	1				
2	95812–08120	BOLT, FLANGE	1	1				
3	95812–08120	BOLT, FLANGE	1	1				
4	95602–08200	NUT, SELF-LOCKING	2	2				
5	90381–15040	BUSH, SOLID	2	2				
6	93210–15414	O-RING	2	2				
7	93700–06004	NIPPLE, GREASE	1	1				
8	3GB–22123–00	BUSH 1	2	2				
9	3GB–22155–00	PIPE	1	1				
10	5TH–21268–01	SEAL	1	1				
11	3GB–28100–00	TOOL KIT	1	1				
12	93210–40407	O-RING	1	1				
13	1NV–2811A–01	GAUGE, AIR	1	1				

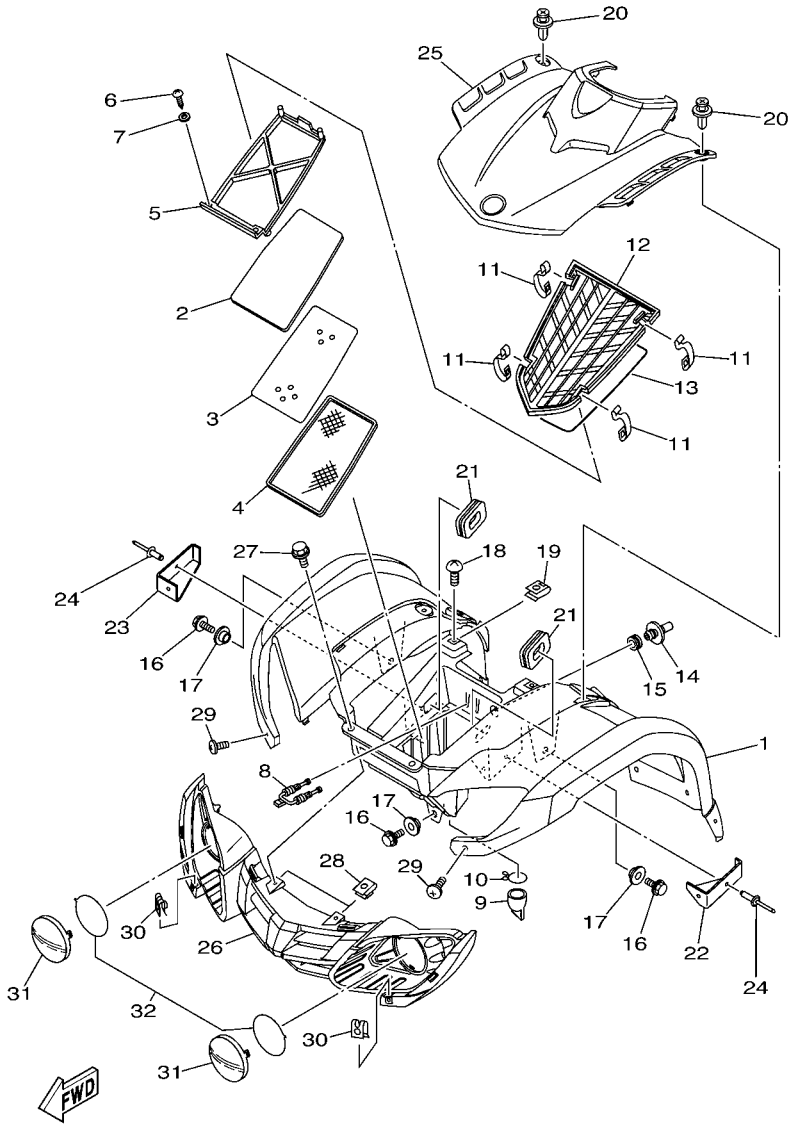

FIG. 17 FRONT FENDER

REF. NO.	PART NO.	DESCRIPTION	USA	CAN				REMARKS
1	2D3–W2151–00	FRONT FENDER COMP.	1					UR FOR PDG
	2D3–W2151–10	FRONT FENDER COMP.	1					UR FOR DPBSN
	2D3–W215C–00	FRONT FENDER COMP.2		1				UR FOR PDG
	2D3–W215C–10	FRONT FENDER COMP.2		1				UR FOR DPBSN
2	55X–14451–00	ELEMENT, AIR CLEANER	1	1				
3	5TH–14477–00	PLATE	1	1				
4	55X–14472–01	PLATE, ELEMENT	1	1				
5	55X–14458–00	GUIDE	1	1				
6	97702–40116	SCREW, TAPPING	2	2				
7	92902–04200	WASHER, PLAIN	2	2				
8	55X–14436–00	HOOK	1	1				
9	59V–14457–00	SEAL	1	1				
10	90467–220A1	CLIP	1	1				
11	5TH–14436–00	HOOK	4	4				
12	5TH–14412–00	CAP, CLEANER CASE 1	1	1				
13	5TH–14452–00	SEAL	1	1				
14	2D3–14419–00	PIPE	1	1				
15	31A–14435–00	GROMMET	1	1				
16	90119–06137	BOLT, WITH WASHER	3	3				
17	90387–06202	COLLAR	3	3				
18	90149–06021	SCREW	2	2				
19	90183–06053	NUT, SPRING	2	2				
20	90269–07076	RIVET	2	2				
21	2HX–14437–01	DUCT	2	2				
22	2D3–23741–00	CAP 1	1	1				
23	2D3–23742–00	CAP 2	1	1				
24	90267–50010	RIVET, BLIND	4	4				

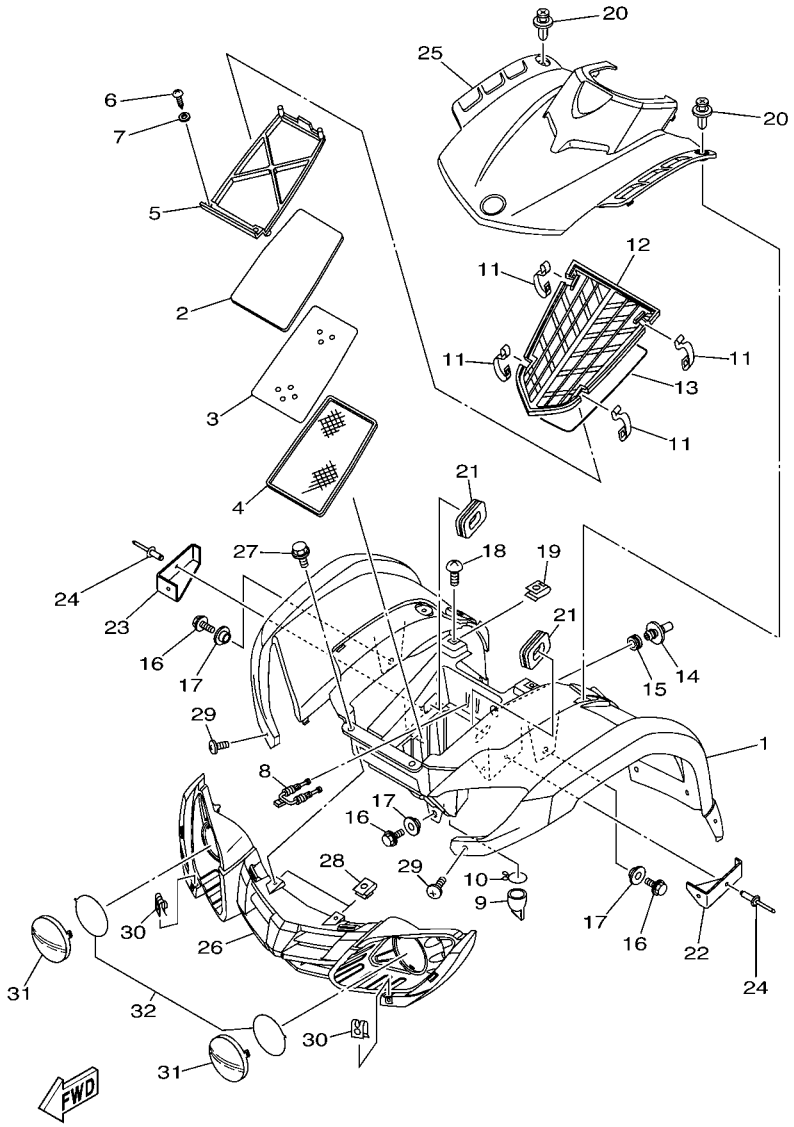

FIG. 17 FRONT FENDER

REF. NO.	PART NO.	DESCRIPTION	USA	CAN				REMARKS
25	2D3–23391–00	PANEL, FRONT	1	1				
26	2D3–28309–00	GRILLE, FRONT	1	1				
27	90109–06172	BOLT	2	2				
28	90183–060A7	NUT, SPRING	2	2				
29	90154–05021	SCREW, BINDING	2	2				
30	90183–050A7	NUT, SPRING	2	2				
31	2D3–84121–00	LENS, HEADLIGHT	2	2				
32	2D3–8412B–00	GRAPHIC SET	1	1				

FIG. 18 REAR FENDER

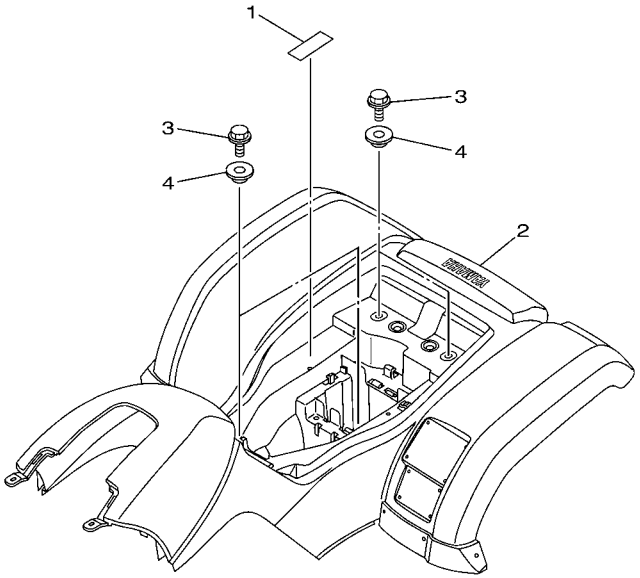

REF. NO.	PART NO.	DESCRIPTION	USA	CAN				REMARKS
1	5TH–2177C–20	PLATE, EPA OFFROAD ATV 1	1					
2	2D3–W2161–00	REAR FENDER COMP.	1					UR FOR PDG
	2D3–W2161–10	REAR FENDER COMP.	1					UR FOR DPBSN
	2D3–W216C–00	REAR FENDER COMP.2		1				UR FOR PDG
	2D3–W216C–10	REAR FENDER COMP.2		1				UR FOR DPBSN
3	90119–06137	BOLT, WITH WASHER	4	4				
4	90387–06153	COLLAR	4	4				

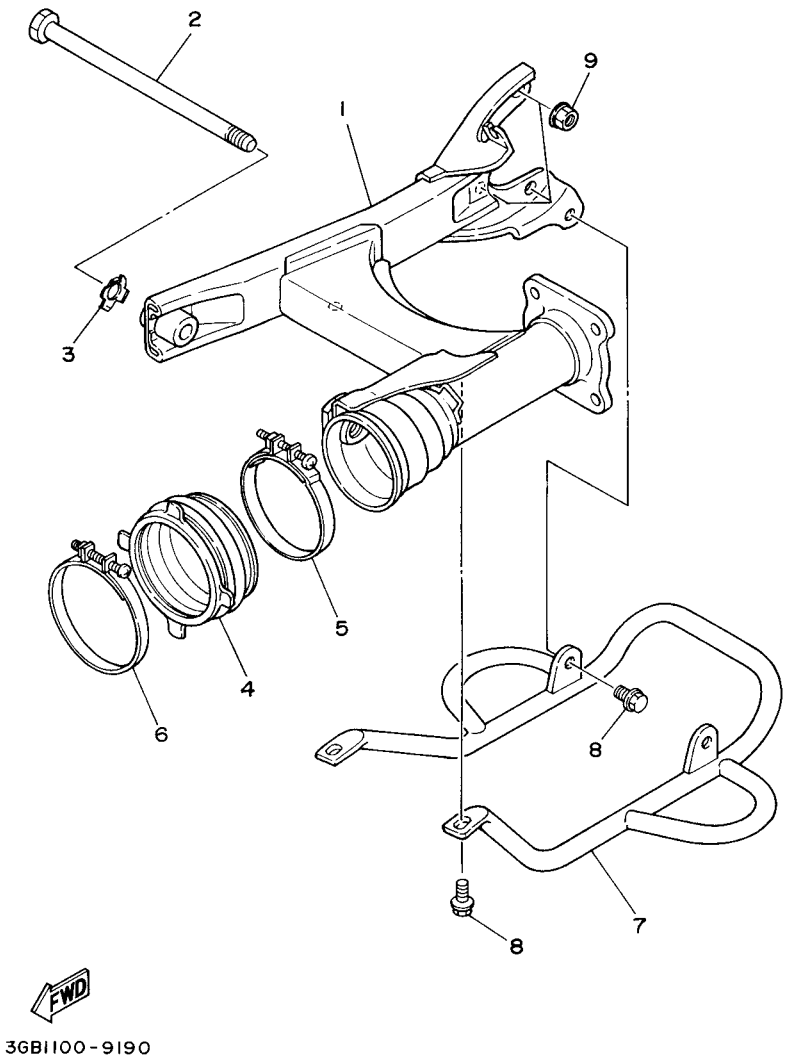

FIG. 19 REAR ARM

REF. NO.	PART NO.	DESCRIPTION	USA	CAN				REMARKS
1	3GB–22110–00–33	REAR ARM COMP.	1	1				YB
2	22W–25181–01	AXLE, WHEEL	1	1				
3	3GB–22156–00	WASHER, PLATE	1	1				
4	55X–22189–00	BOOT, RUBBER	1	1				
5	90460–75020	CLAMP, HOSE	1	1				
6	90460–85135	CLAMP, HOSE	1	1				
7	3GB–2219X–00	COVER	1	1				
8	95812–08014	BOLT, FLANGE	4	4				
9	90185–10019	NUT, SELF-LOCKING	3	3				

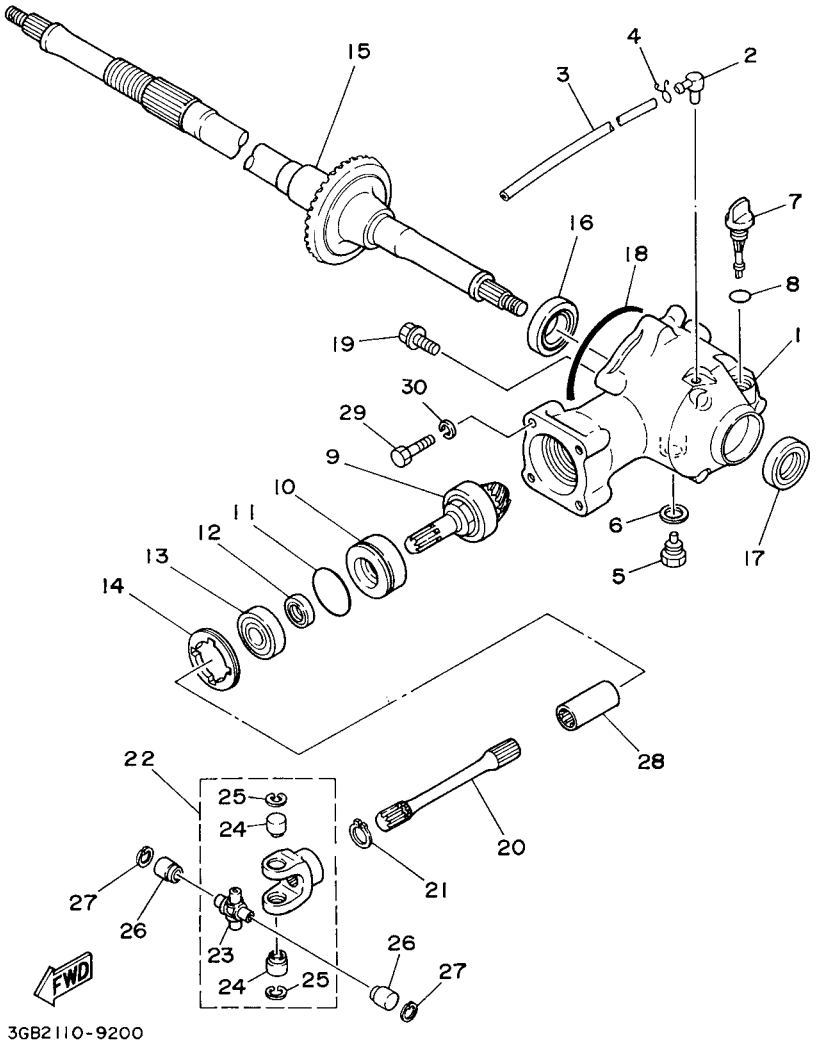

FIG. 20 DRIVE SHAFT

REF. NO.	PART NO.	DESCRIPTION	USA	CAN				REMARKS
1	3GB–46151–00	HOUSING, DRIVE SHAFT	1	1				
2	2N4–15371–00	BREATHER	1	1				
3	90445–073F9	HOSE (L1200)	1	1				
4	90467–07029	CLIP	1	1				
5	90340–14132	PLUG, STRAIGHT SCREW	1	1				
6	214–11198–01	GASKET	1	1				
7	3GB–15362–00	PLUG, OIL LEVEL	1	1				
8	93210–14104	O-RING	1	1				
9	3GB–46120–00	DRIVE PINION COMP.	1	1				
10	90560–23355	SPACER	1	1				
11	93210–43713	O-RING	1	1				
12	93102–17271	OIL SEAL	1	1				
13	93306–30306	BEARING	1	1				
14	90179–55464	NUT	1	1				
15	3GB–46110–20	RING GEAR COMP.	1	1				
16	93306–07801	BEARING	1	1				
17	93102–28022	OIL SEAL	1	1				
18	93211–066A9	O-RING	1	1				
19	95812–06016	BOLT, FLANGE	6	6				
20	3GB–46172–01	SHAFT, DRIVE	1	1				
21	99009–17400	CIRCLIP	1	1				
22	2HX–46180–00	CROSS JOINT COMP.	1	1				
23	22F–46187–00	.SPIDER	1	1				
24	93311–20952	.BEARING	2	2				
25	99009–17500	.CIRCLIP	2	2				
26	93311–20952	BEARING	2	2				
27	99009–17500	CIRCLIP	2	2				

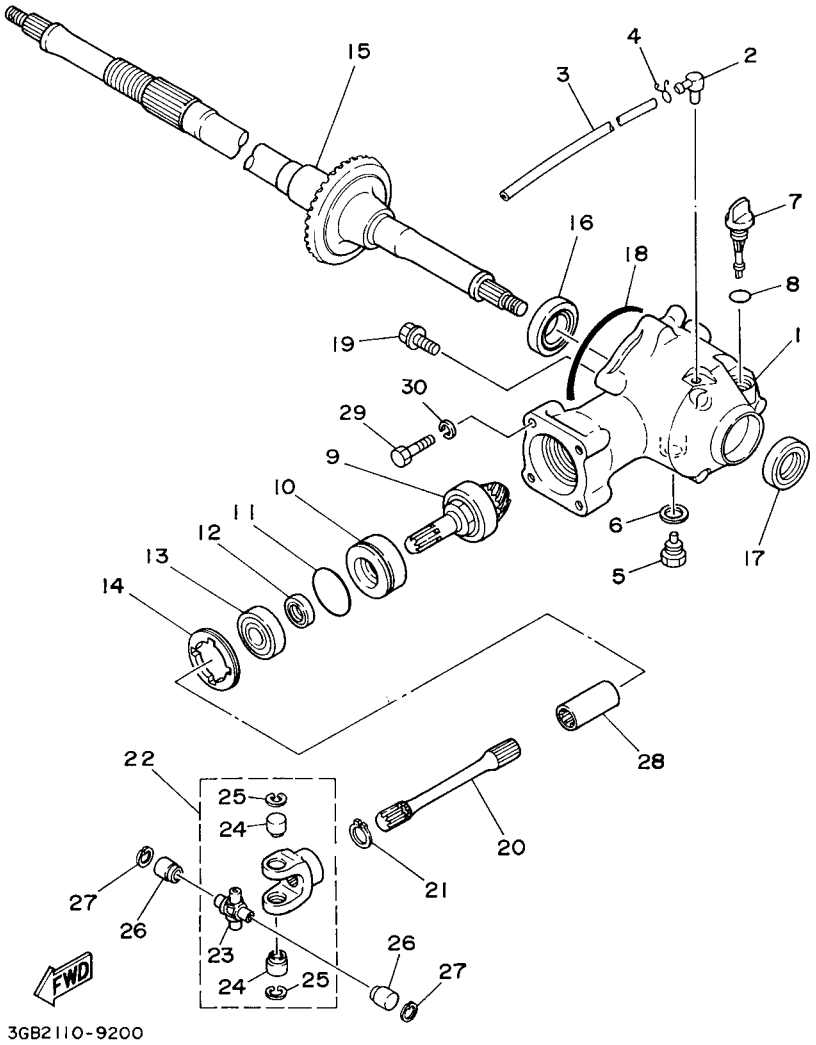

FIG. 20 DRIVE SHAFT

REF. NO.	PART NO.	DESCRIPTION	USA	CAN				REMARKS
28	22F–46123–01	COUPLING, GEAR	1	1				
29	90101–08058	BOLT	4	4				
30	92902–08100	WASHER, SPRING	4	4				

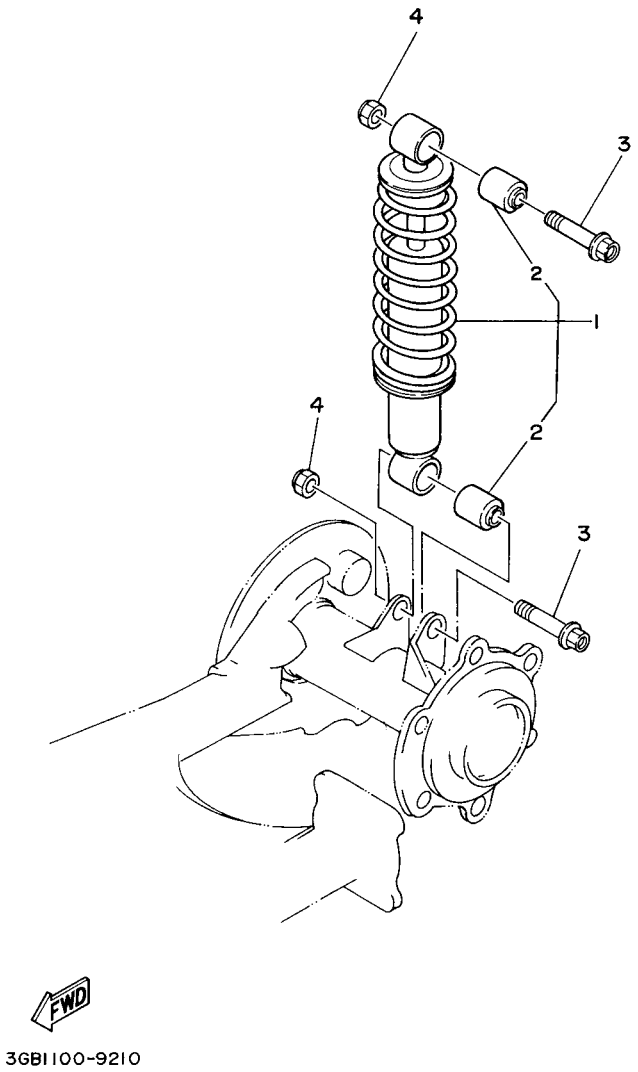

FIG. 21 REAR SUSPENSION

REF. NO.	PART NO.	DESCRIPTION	USA	CAN				REMARKS
1	3GB–22210–00–33	SHOCK ABSORBER ASSY, REAR	1	1				YB
2	59V–22216–00	.BUSH, REAR SHOCK ABSORBER	2	2				
3	90105–10131	BOLT, FLANGE	2	2				
4	90185–10022	NUT, SELF-LOCKING	2	2				

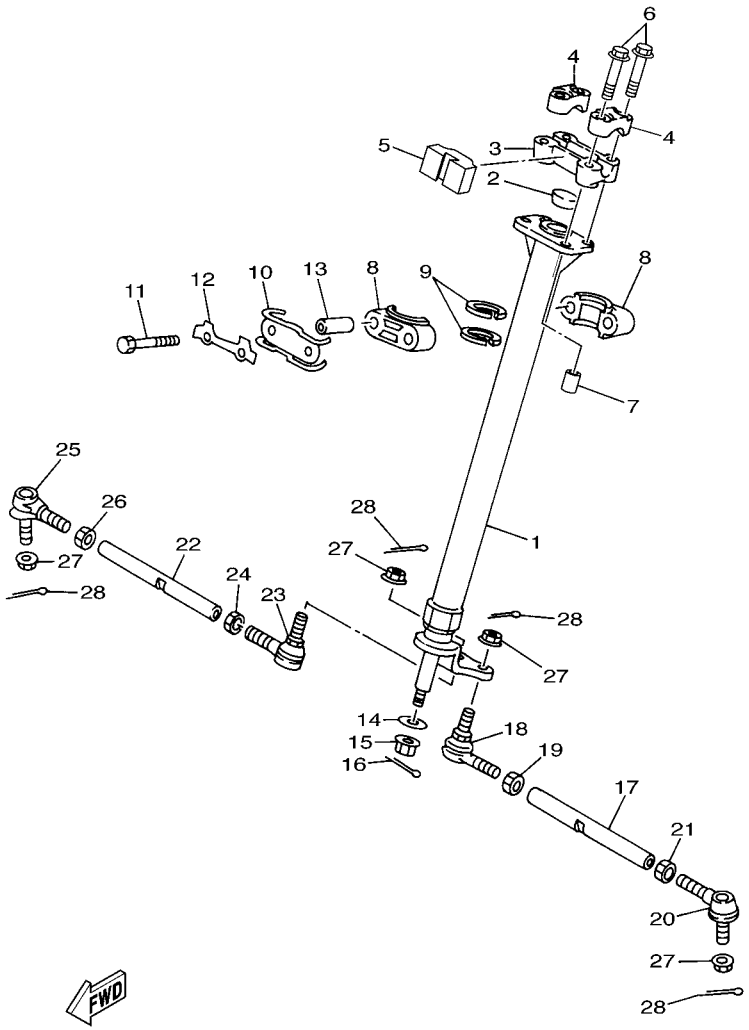

FIG. 22 STEERING

REF. NO.	PART NO.	DESCRIPTION	USA	CAN				REMARKS
1	4EM–23813–20	COLUMN, STEERING 2	1	1				
2	90336–28053	PLUG, TAPER	1	1				
3	8G5–23814–00	HOLDER,HANDLE UNDER	1	1				
4	8K1–23814–00	HOLDER, HANDLE	2	2				
5	2D3–23858–00	SPACER	1	1				
6	95822–08055	BOLT, FLANGE	4	4				
7	90445–11418	HOSE (L18)	1	1				
8	1UY–23812–00	PLANE BEARING, STEERING	2	2				
9	93112–31011	OIL SEAL	2	2				
10	3GB–23868–00	BRACKET, STEERING LOWER	1	1				
11	97022–08060	BOLT	2	2				
12	1UY–23894–01	WASHER, LOCK 1	1	1				
13	90387–090R0	COLLAR	2	2				
14	90201–10036	WASHER, PLATE	1	1				
15	90185–10019	NUT, SELF-LOCKING	1	1				
16	91401–20020	PIN, COTTER	1	1				
17	3GB–23831–00	ROD, TIE	1	1				
18	55X–23841–01	JOINT, UNIVERSAL 1	1	1				
19	95302–10700	NUT	1	1				
20	52H–23845–01	JOINT, UNIVERSAL 2	1	1				
21	90170–10010	NUT	1	1				(L.H. THREAD)
22	3GB–23831–00	ROD, TIE	1	1				
23	55X–23841–01	JOINT, UNIVERSAL 1	1	1				
24	95302–10700	NUT	1	1				
25	52H–23845–01	JOINT, UNIVERSAL 2	1	1				
26	90170–10010	NUT	1	1				(L.H. THREAD)
27	90185–10019	NUT, SELF-LOCKING	4	4				

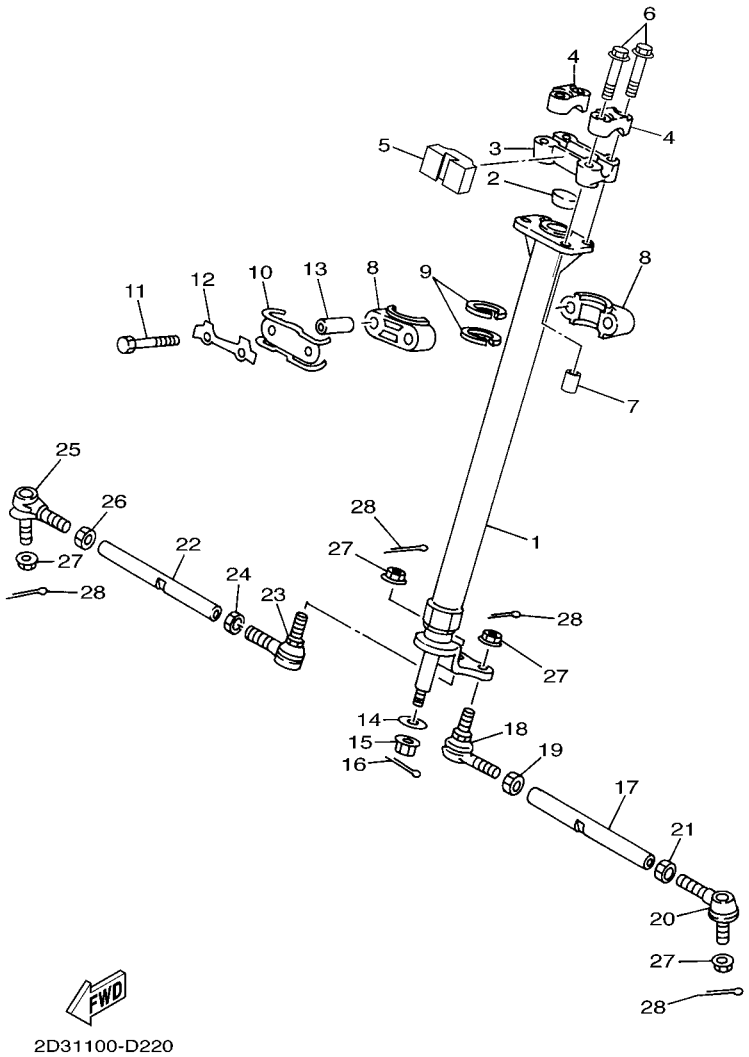

FIG. 22 STEERING

REF. NO.	PART NO.	DESCRIPTION	USA	CAN				REMARKS
28	91401–20020	PIN, COTTER	4	4				

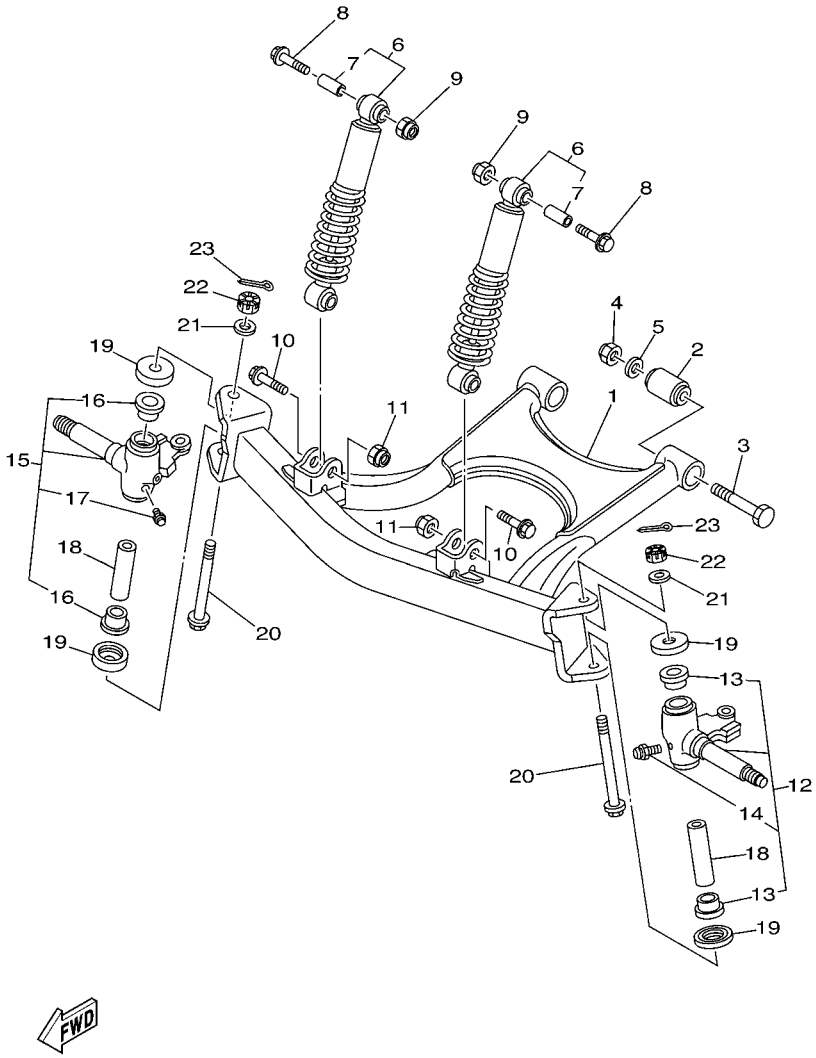

4EMT100-0230

FIG. 23 FRONT SUSPENSION & WHEEL

REF. NO.	PART NO.	DESCRIPTION	USA	CAN				REMARKS
1	3GB–23570–00–33	FRONT LOWER ARM COMP.	1	1				YB
2	307–22123–00	BUSH 1	2	2				
3	90101–12033	BOLT	2	2				
4	90185–12010	NUT, SELF-LOCKING	2	2				
5	90201–12050	WASHER, PLATE	2	2				
6	2HX–23350–00–33	SHOCK ABSORBER ASSY	2	2				YB
7	2HX–2331U–00	.COLLAR, DISTANCE	1	1				
8	90105–10262	BOLT, FLANGE	2	2				
9	90185–10022	NUT, SELF-LOCKING	2	2				
10	90105–12062	BOLT, FLANGE	2	2				
11	90185–12010	NUT, SELF-LOCKING	2	2				
12	3GB–23501–10	STEERING KNUCKLE ASSY (LEFT)	1	1				
13	90381–17067	.BUSH, SOLID	2	2				
14	93700–06004	.NIPPLE, GREASE	1	1				
15	3GB–23502–10	STEERING KNUCKLE ASSY (RIGHT)	1	1				
16	90381–17067	.BUSH, SOLID	2	2				
17	93700–06004	.NIPPLE, GREASE	1	1				
18	3GB–23448–00	SPACER	2	2				
19	2NL–23517–00	COVER, THRUST 1	4	4				
20	90105–10274	BOLT, FLANGE	2	2				
21	90201–10057	WASHER, PLATE	2	2				
22	90171–10003	NUT, CASTLE	2	2				
23	91401–20020	PIN, COTTER	2	2				

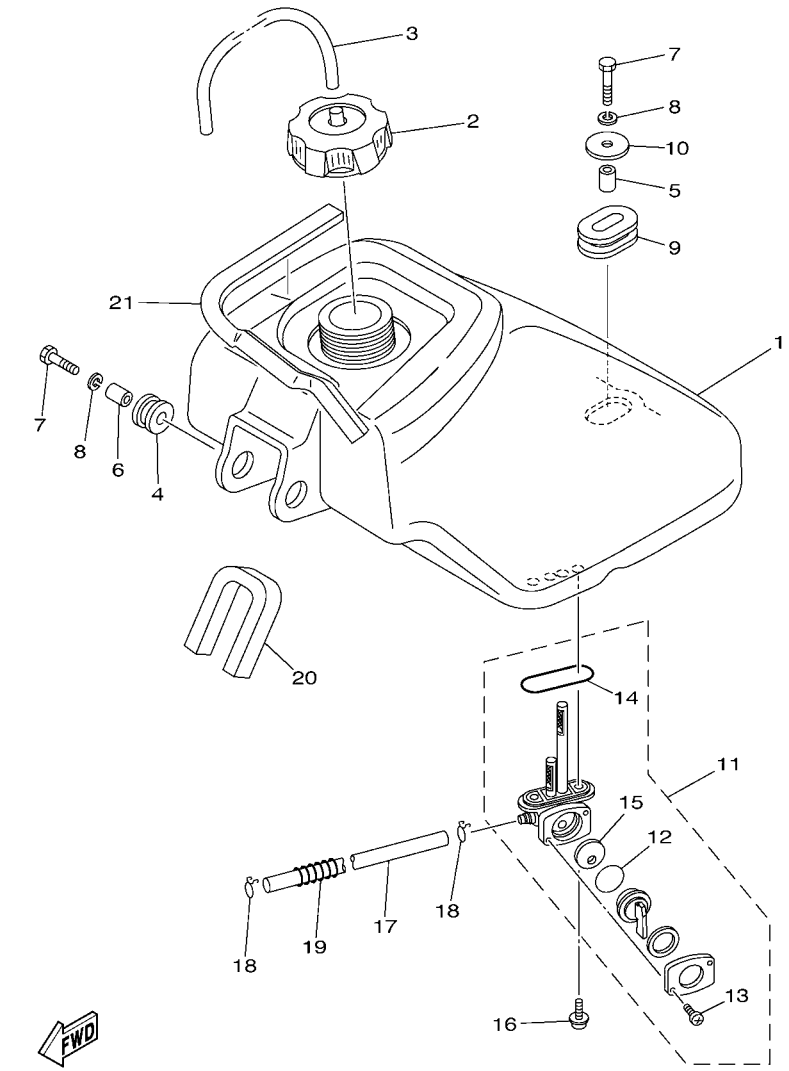

FIG. 24 FUEL TANK

REF. NO.	PART NO.	DESCRIPTION	USA	CAN				REMARKS
1	2HX–24110–10	FUEL TANK COMP.	1	1				
2	2FJ–24610–00	CAP ASSY	1	1				
3	90445–083J4	HOSE (L340)	1	1				
4	90480–18290	GROMMET	2	2				
5	90387–07598	COLLAR	1	1				
6	90387–066J1	COLLAR	2	2				
7	97027–06030	BOLT	3	3				
8	92907–06100	WASHER, SPRING	3	3				
9	90480–01400	GROMMET	1	1				
10	90201–06090	WASHER, PLATE	1	1				
11	55X–24500–02	FUEL COCK ASSY 1	1	1				
12	3AJ–24534–01	.SEAL, COCK	1	1				
13	98507–03008	.SCREW, PAN HEAD	2	2				
14	4X8–24512–00	.O-RING	1	1				
15	3AC–24523–00	.VALVE PACKING	1	1				
16	90149–06108	SCREW	2	2				
17	90445–10044	HOSE (L145)	1	1				
18	90467–090A2	CLIP	2	2				
19	90504–06030	SPRING, COMPRESSION	1	1				
20	2HX–24181–00	DAMPER, LOCATING 1	1	1				
21	5TH–2414H–00	DAMPER, PLATE 1	1	1				

FIG. 25 SEAT

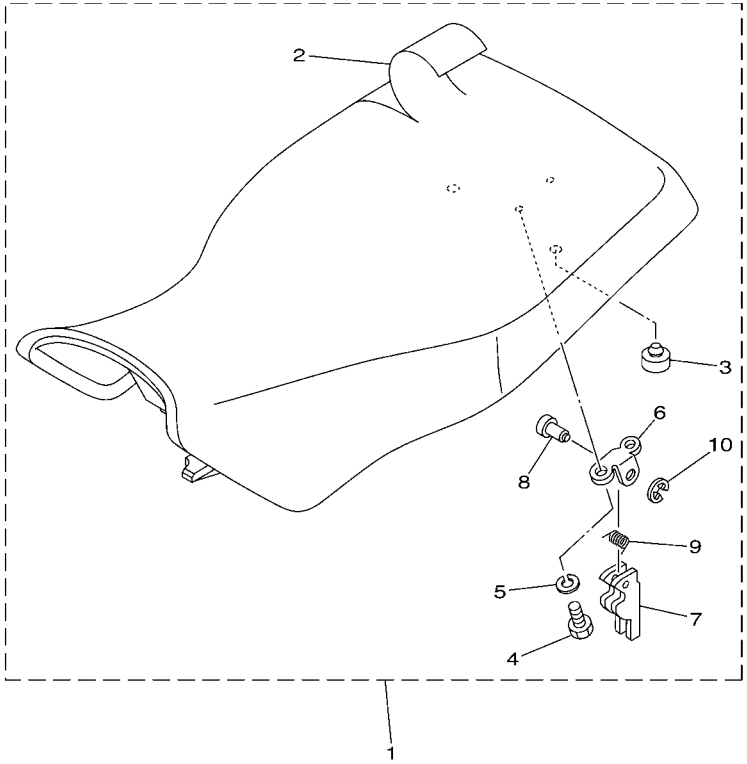

2D31100-D250

REF. NO.	PART NO.	DESCRIPTION	USA	CAN				REMARKS
1	2D3–24710–01	SINGLE SEAT ASSY	1	1				
2	2D3–2470F–00	.SEAT COVER COMP.	1	1				
3	371–27114–00	.STOPPER, MAIN STAND	2	2				
4	97002–06012	.BOLT	2	2				
5	92902–06100	.WASHER, SPRING	2	2				
6	4K0–24775–00	.BRACKET, SEAT LEVER	1	1				
7	29U–24776–00	.LEVER, SEAT	1	1				
8	4K0–24774–A0	.PIN	1	1				
9	90508–20454	.SPRING, TORSION	1	1				
10	93430–04002	.CIRCLIP	1	1				

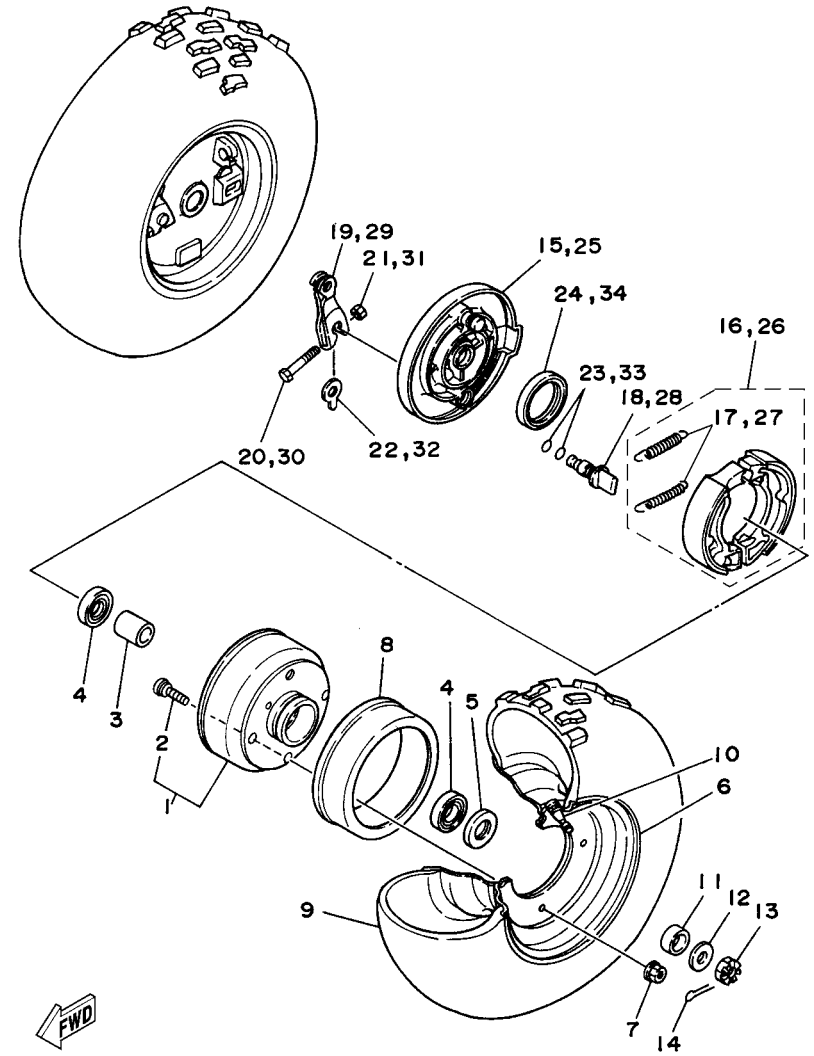

5TH5100-B260

FIG. 26 FRONT WHEEL

REF. NO.	PART NO.	DESCRIPTION	USA	CAN				REMARKS
1	2FJ–25111–10	HUB, FRONT	2	2				
2	90114–08001	.BOLT, SERRATION	4	4				
3	3FA–25117–00	SPACER, BEARING	2	2				
4	93306–00308	BEARING	4	4				
5	93102–23275	OIL SEAL	2	2				
6	2FJ–25180–00–35	WHEEL COMP.	2	2				SL
7	95702–08500	NUT, WITH WASHER	8	8				
8	3GB–25185–00	RING 1	2	2				
9	94107–07009	TIRE (AT18X7-7 *KT586T/L N)	2	2				DUNLOP
10	93900–00022	VALVE, RIM (TR413)	2	2				TAIHEIYO
11	90387–175R2	COLLAR	2	2				
12	90201–14586	WASHER, PLATE	2	2				
13	90171–14002	NUT, CASTLE	2	2				
14	91401–30025	PIN, SPLIT	2	2				
15	2FJ–25121–00	PLATE, BRAKE SHOE	1	1				
16	4KN–W253E–11	BRAKE SHOE KIT	1	1				
17	90506–15260	.SPRING, TENSION	2	2				
18	3GB–25151–00	CAMSHAFT	1	1				
19	2FJ–25155–00	LEVER, CAMSHAFT 1	1	1				
20	90101–06046	BOLT	1	1				
21	95302–06600	NUT	1	1				
22	52H–2513A–00	PLATE, INDICATOR	1	1				
23	93210–12327	O-RING	2	2				
24	93102–40367	OIL SEAL	1	1				
25	2FJ–25169–00	PLATE, BRAKE SHOE 2	1	1				
26	4KN–W253E–11	BRAKE SHOE KIT	1	1				
27	90506–15260	.SPRING, TENSION	2	2				

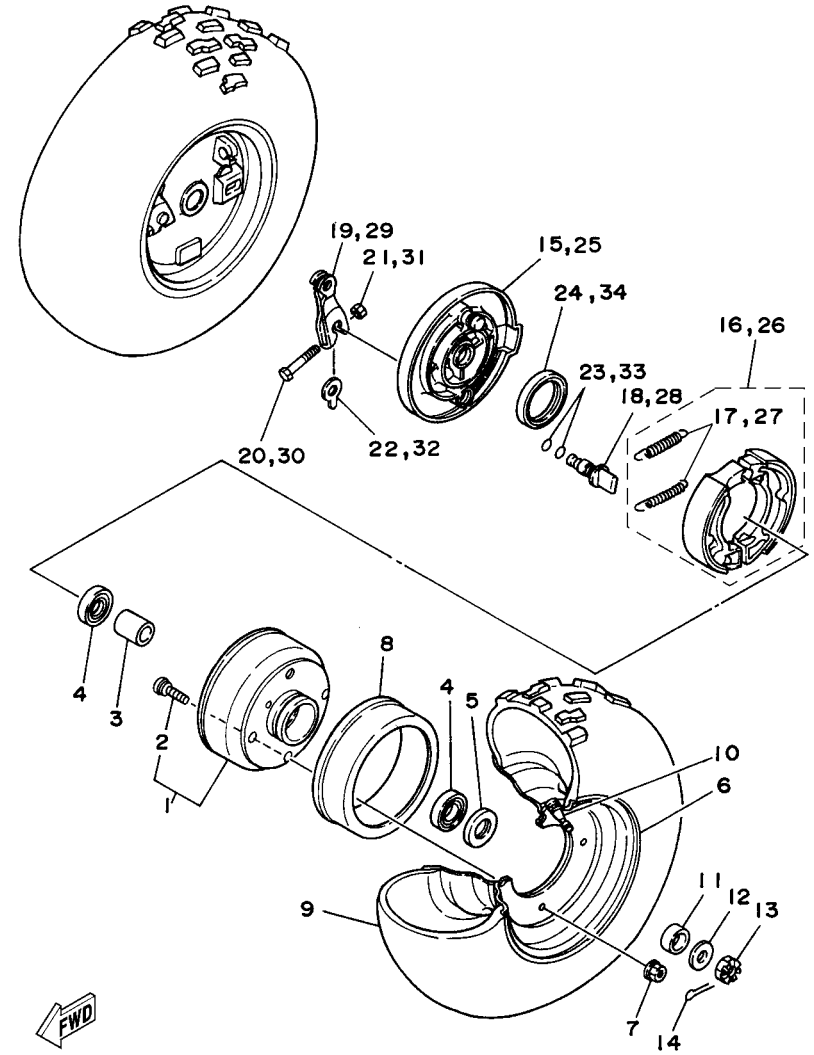

5TH5100-B260

FIG. 26 FRONT WHEEL

REF. NO.	PART NO.	DESCRIPTION	USA	CAN				REMARKS
28	3GB–25151–00	CAMSHAFT	1	1				
29	2FJ–25156–00	LEVER, CAMSHAFT 2	1	1				
30	90101–06046	BOLT	1	1				
31	95302–06600	NUT	1	1				
32	52H–2513A–00	PLATE, INDICATOR	1	1				
33	93210–12327	O-RING	2	2				
34	93102–40367	OIL SEAL	1	1				

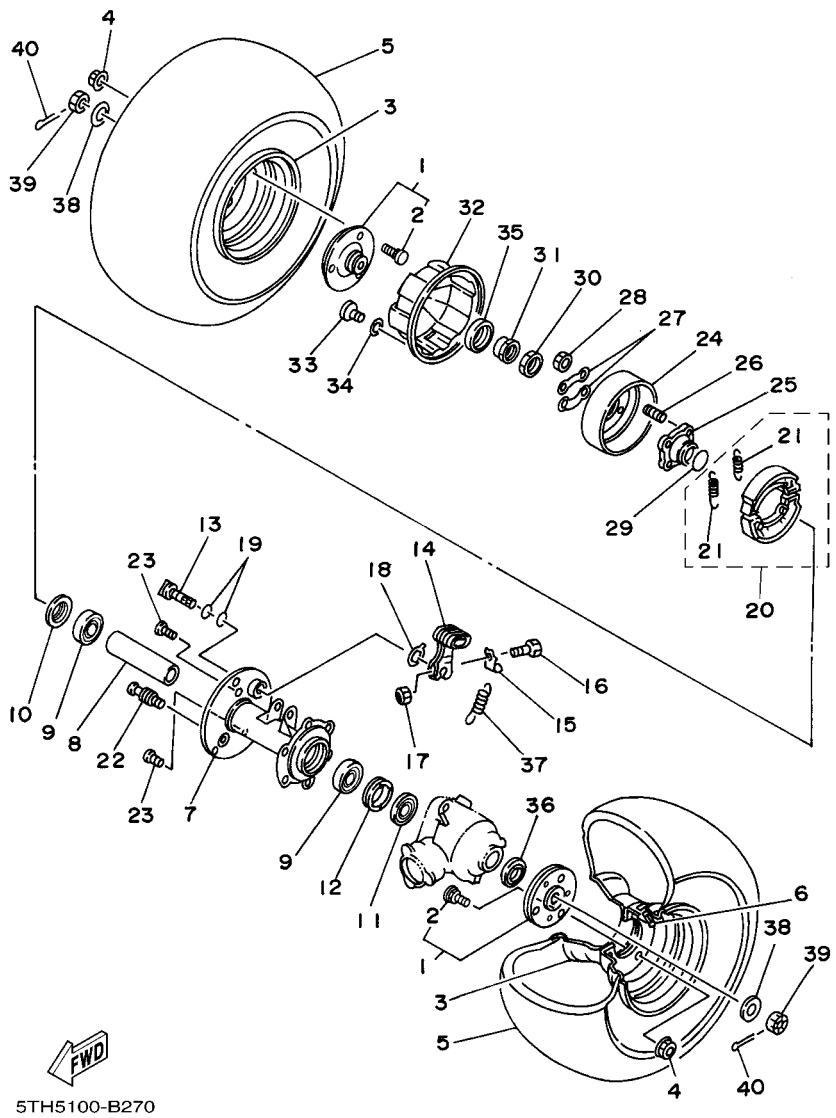

FIG. 27 REAR WHEEL

REF. NO.	PART NO.	DESCRIPTION	USA	CAN				REMARKS
1	55X–25383–10	COLLAR, WHEEL	2	2				
2	90114–08001	.BOLT, SERRATION	3	3				
3	2FJ–25390–00–35	REAR WHEEL COMP.	2	2				SL
4	95702–08500	NUT, WITH WASHER	6	6				
5	94108–07009	TIRE (AT18X8-7**KT587T/L N)	2	2				DUNLOP
6	93900–00022	VALVE, RIM (TR413)	2	2				TAIHEIYO
7	3GB–25311–00–33	HUB, REAR	1	1				YB
8	3GB–25317–00	SPACER, BEARING	1	1				
9	93306–00612	BEARING	2	2				
10	93102–38383	OIL SEAL	1	1				
11	93102–36409	OIL SEAL	1	1				
12	3GB–25382–00	NUT, AXLE	1	1				
13	3Y6–25351–00	CAMSHAFT	1	1				
14	55X–25355–00	LEVER, CAMSHAFT	1	1				
15	55X–2533H–00	HOOK, SPRING	1	1				
16	90101–06562	BOLT	1	1				
17	95302–06600	NUT	1	1				
18	23F–2533A–00	PLATE, INDICATOR	1	1				
19	93210–14104	O-RING	2	2				
20	3FA–W253E–00	BRAKE SHOE KIT	1	1				
21	90506–15260	.SPRING, TENSION	2	2				
22	3GB–25326–00	PIN, PIVOT	1	1				
23	90114–10017	BOLT, SERRATION	2	2				
24	3GB–2531E–00	DRUM, BRAKE	1	1				
25	3GB–25343–10	BOSS	1	1				
26	90116–08084	BOLT, STUD	4	4				
27	390–25412–01	WASHER	2	2				

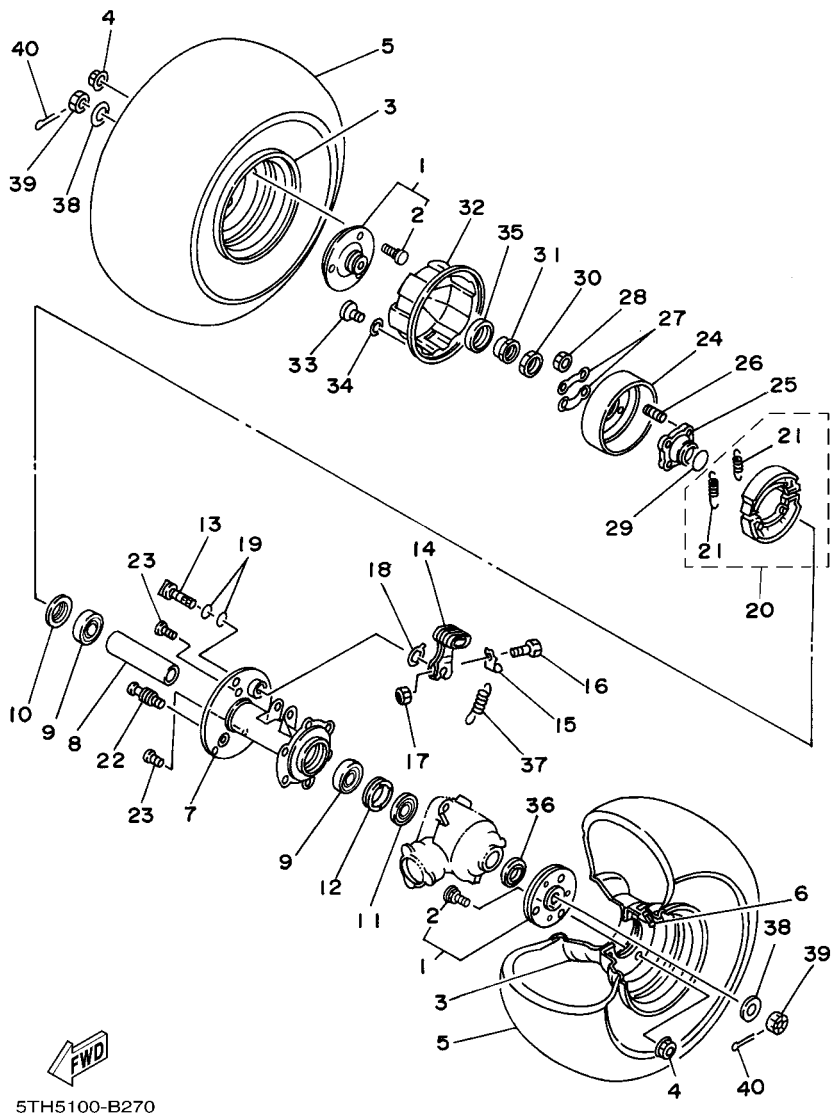

FIG. 27 REAR WHEEL

REF. NO.	PART NO.	DESCRIPTION	USA	CAN				REMARKS
28	95302–08600	NUT	4	4				
29	93210–26606	O-RING	1	1				
30	90170–28011	NUT	1	1				
31	90179–28009	NUT	1	1				
32	3GB–25715–00	COVER 1	1	1				
33	92502–06012	SCREW, PAN HEAD	3	3				
34	92902–06100	WASHER, SPRING	3	3				
35	93102–35349	OIL SEAL	1	1				
36	3GB–25367–00	COVER, HUB DUST	1	1				
37	90507–15038	SPRING, TENSION	1	1				
38	90201–12045	WASHER, PLATE	2	2				
39	90171–12001	NUT, CASTLE	2	2				
40	91401–25025	PIN, COTTER	2	2				

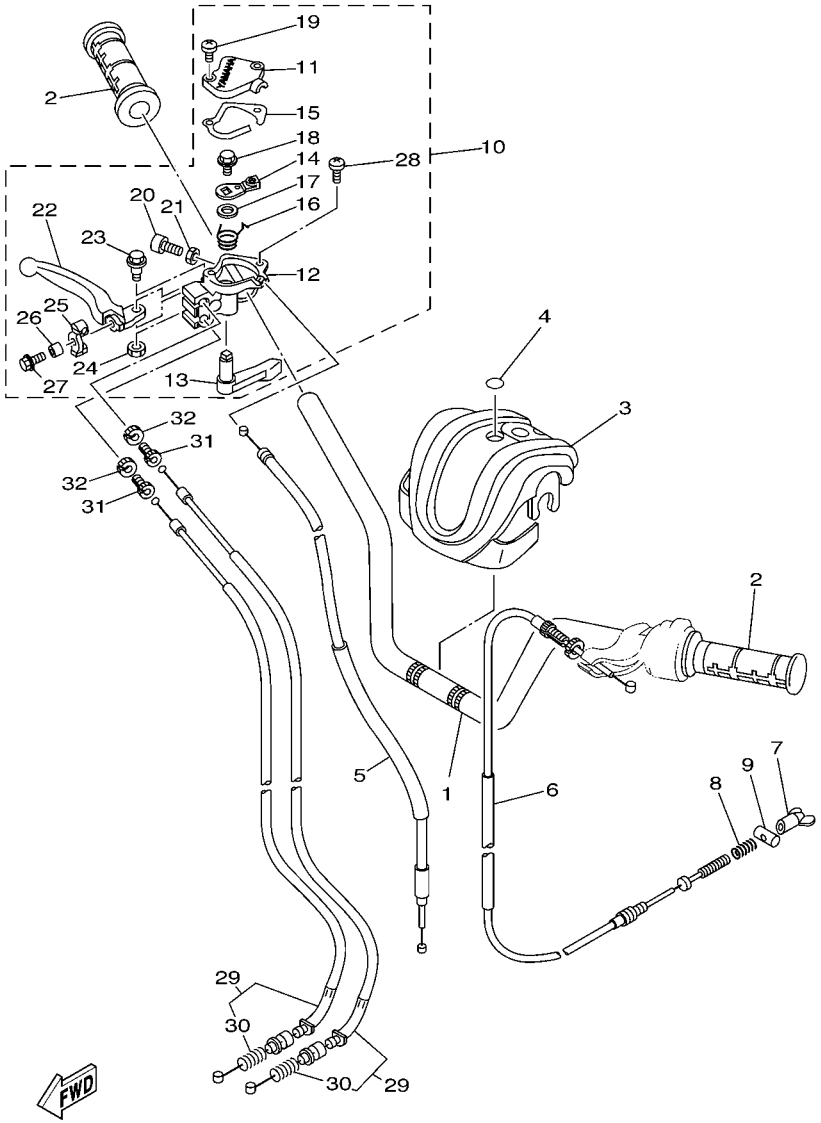

5TH1100-2280

FIG. 28 STEERING HANDLE & CABLE

REF. NO.	PART NO.	DESCRIPTION	USA	CAN				REMARKS
1	2D3–26111–00	HANDLEBAR	1	1				
2	5LP–26241–00	GRIP	2	2				
3	5TH–26124–30	PROTECTOR, HANDLEBAR	1	1				UR FOR PDG
	5TH–26124–40	PROTECTOR, HANDLEBAR	1	1				UR FOR DPBSN
4	5GT–2836B–10	TUNING FORK MARK	1	1				
5	3GB–26311–02	CABLE, THROTTLE 1	1	1				
6	3GB–26341–01	WIRE, BRAKE 1	1	1				
7	20E–26343–00	NUT, ADJUSTING	1	1				
8	90501–10782	SPRING, COMPRESSION	1	1				
9	90249–12008	PIN	1	1				
10	5TH–26250–10	THROTTLE LEVER ASSY	1	1				
11	3GB–2628F–00	.CAP, GEAR	1	1				
12	3GB–2625E–01	.BODY, THROTTLE	1	1				
13	3GB–2625G–00	.LEVER, THROTTLE	1	1				
14	3GB–2625H–00	.ARM, THROTTLE	1	1				
15	3GB–2628G–02	.GASKET	1	1				
16	90508–10775	.SPRING, TORSION	1	1				
17	90201–145M4	.WASHER, PLATE	1	1				
18	95802–08012	.BOLT, FLANGE	1	1				
19	98502–04016	.SCREW, PAN HEAD	2	2				
20	91312–05025	.BOLT	1	1				
21	95302–05700	.NUT	1	1				
22	5TH–83922–00	.LEVER 2	1	1				
23	90109–06243	.BOLT	1	1				
24	95602–06100	.NUT, U	1	1				
25	3GB–26347–00	.JOINT, CABLE	1	1				
26	90387–066V8	.COLLAR	1	1				

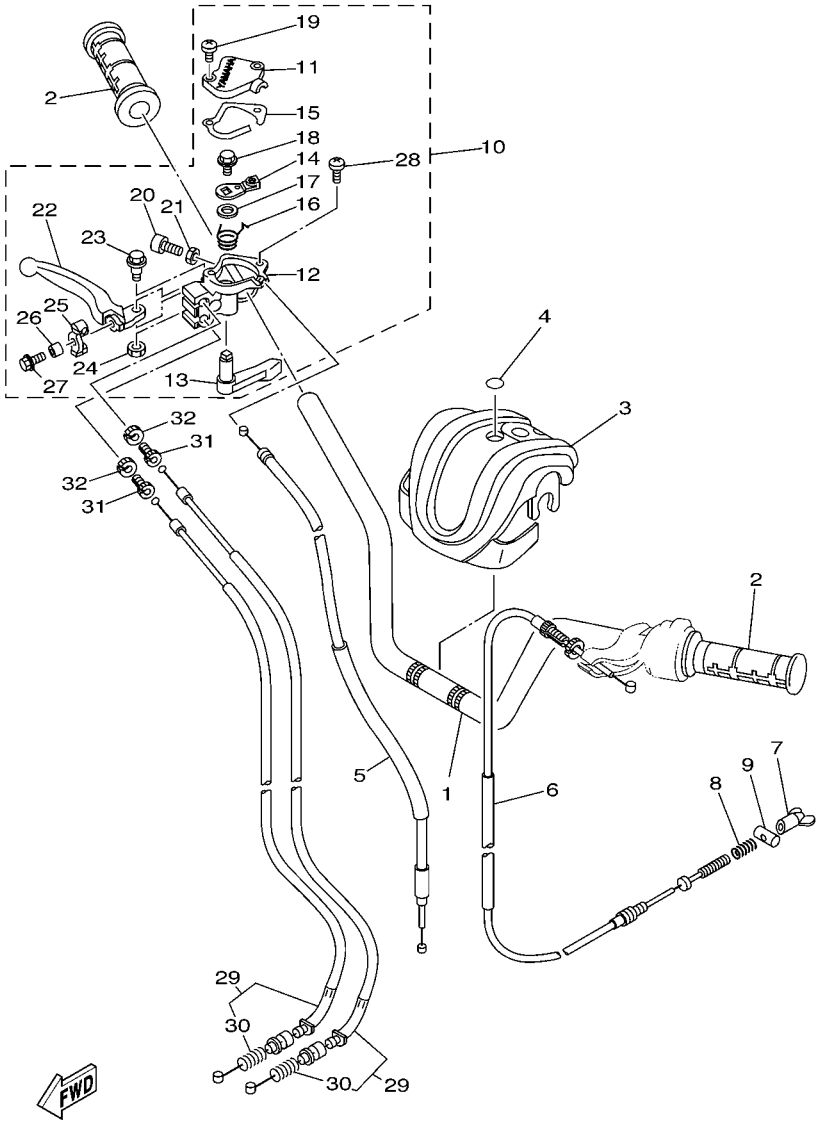

5TH1100-2280

FIG. 28 STEERING HANDLE & CABLE

REF. NO.	PART NO.	DESCRIPTION	USA	CAN				REMARKS
27	95802–06016	.BOLT, FLANGE	1	1				
28	98502–06020	.SCREW, PAN HEAD	1	1				
29	3GB–26361–03	CABLE, BRAKE	2	2				
30	90501–08511	.SPRING, COMPRESSION	1	1				
31	90123–08106	BOLT	2	2				
32	90179–08030	NUT	2	2				

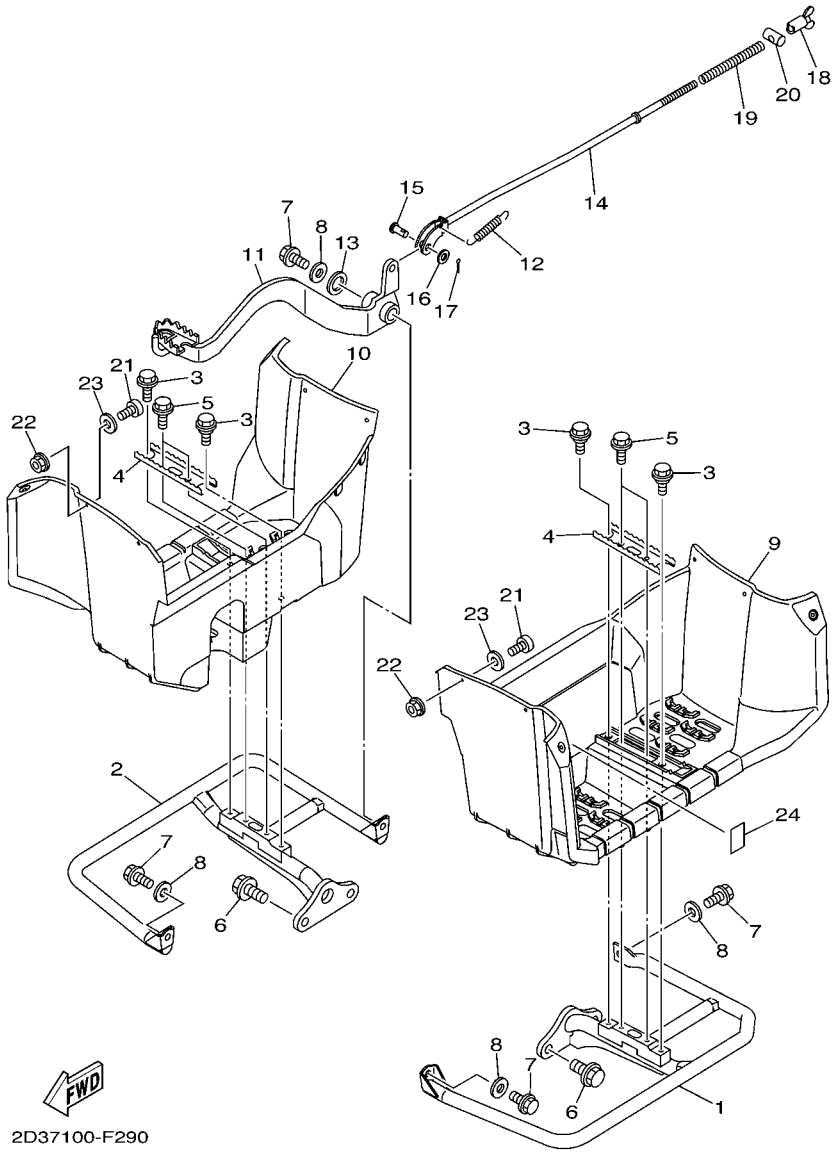

FIG. 29 STAND & FOOTREST

REF. NO.	PART NO.	DESCRIPTION	USA	CAN				REMARKS
1	2D3–27411–10	FOOTREST 1	1	1				
2	2D3–27421–10	FOOTREST 2	1	1				
3	90109–06172	BOLT	4	4				
4	2D3–2741A–00	ARM 1	2	2				
5	95802–06012	BOLT, FLANGE	4	4				
6	95812–12020	BOLT, FLANGE	4	4				
7	95022–08014	BOLT, FLANGE	4	4				
8	90201–08043	WASHER, PLATE	4	4				
9	2D3–27453–01	COVER 1	1	1				
10	2D3–27463–01	COVER 2	1	1				
11	2D3–27211–10	PEDAL, BRAKE	1	1				
12	90506–16318	SPRING, TENSION	1	1				
13	90201–15018	WASHER, PLATE	1	1				
14	3GB–27231–00	ROD, BRAKE	1	1				
15	90240–06076	PIN, CLEVIS	1	1				
16	92902–06200	WASHER	1	1				
17	91401–20012	PIN, COTTER	1	1				
18	20E–26343–00	NUT, ADJUSTING	1	1				
19	90501–10245	SPRING, COMPRESSION	1	1				
20	90249–12008	PIN	1	1				
21	98902–05016	SCREW, BIND	12	12				
22	95702–05300	NUT, NYLON	12	12				
23	90201–05042	WASHER, PLATE	12	12				
24	4EM–15443–01	EMBLEM	1	1				

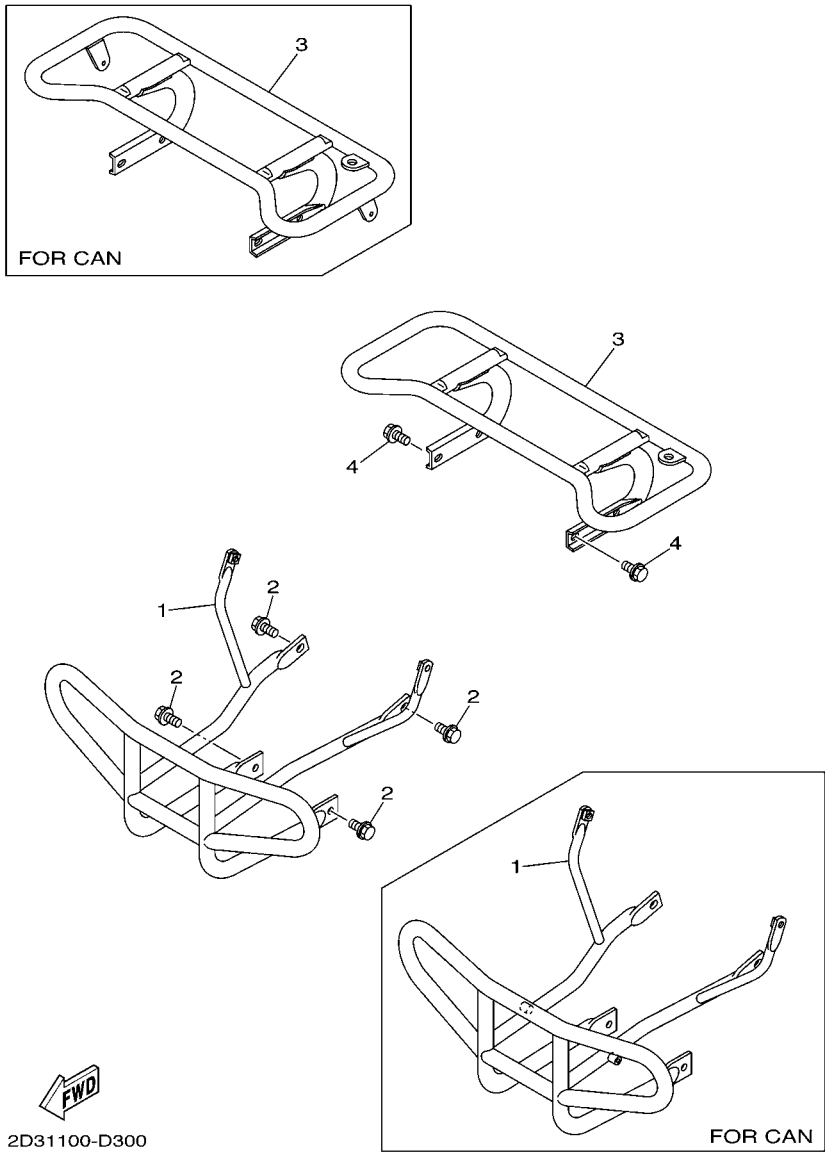

FIG. 30 GUARD

REF. NO.	PART NO.	DESCRIPTION	USA	CAN				REMARKS
1	2D3–2845N–00	BAR, CARRY FRONT	1					
	2D3–2845N–10	BAR, CARRY FRONT		1				
2	95812–08014	BOLT, FLANGE	4	4				
3	2D3–24842–00	CARRIER, REAR	1					
	2D3–24842–10	CARRIER, REAR		1				
4	95812–08012	BOLT, FLANGE	4	4				

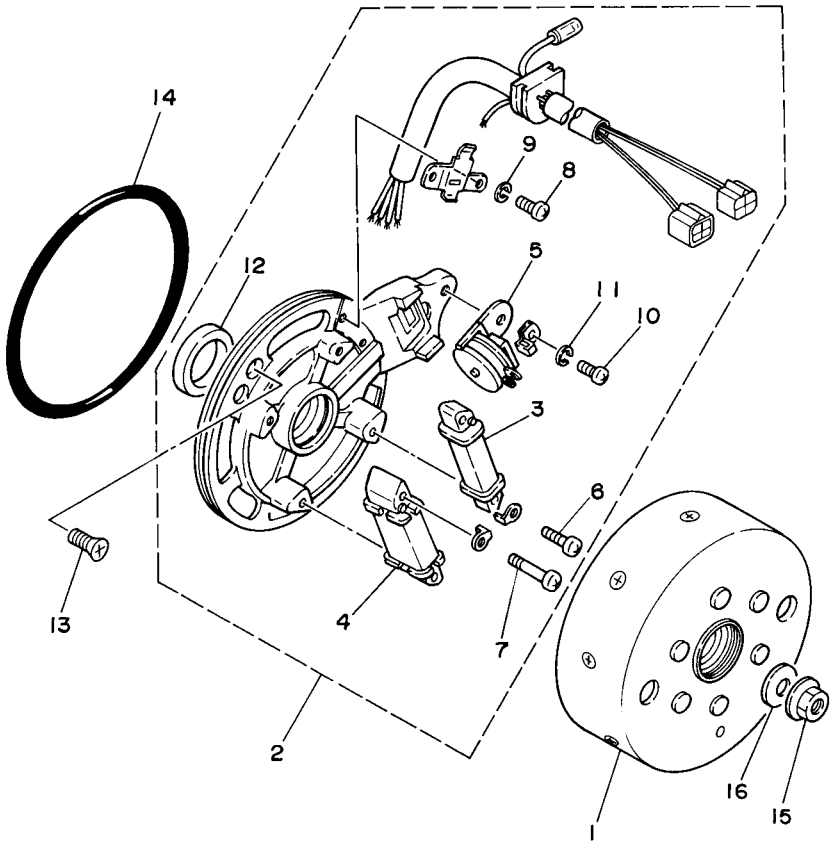

4EM9100-5320

FIG. 31 GENERATOR

REF. NO.	PART NO.	DESCRIPTION	USA	CAN				REMARKS
1	2FM–85550–M1	ROTOR ASSY	1	1				
2	4EM–85560–10	BASE ASSY	1	1				
3	5G3–85520–M1	.COIL, CHARGE	1	1				
4	55X–81313–M0	.COIL, LIGHTING 1	1	1				
5	22K–85595–M0	.COIL, PULSER	1	1				
6	98511–04012	.SCREW, PAN HEAD	2	2				
7	98511–04020	.SCREW, PAN HEAD	2	2				
8	98501–04006	.SCREW, PAN HEAD	2	2				
9	92901–04100	.WASHER, SPRING	2	2				
10	98501–05010	.SCREW, PAN HEAD	1	1				
11	92901–05100	.WASHER, SPRING	1	1				
12	93102–19276	.OIL SEAL	1	1				
13	98702–06016	SCREW, FLAT HEAD	2	2				
14	93211–02703	O-RING	1	1				
15	90179–10023	NUT	1	1				
16	90201–101A4	WASHER, PLATE	1	1				

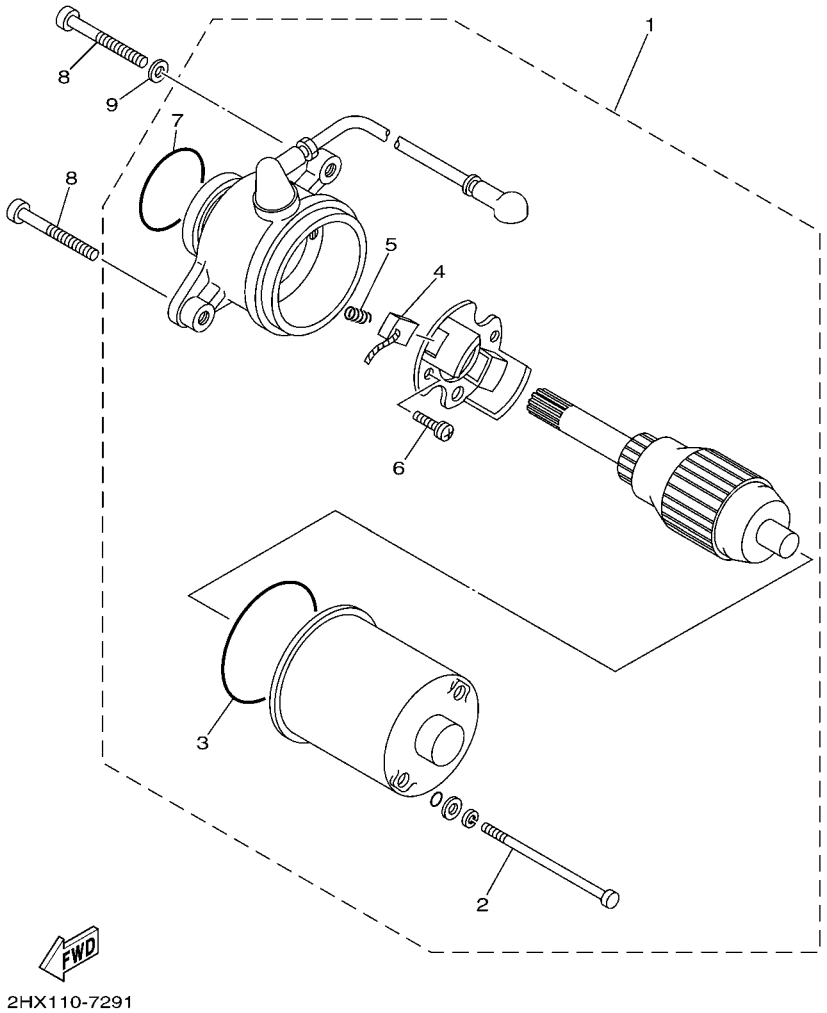

FIG. 32 STARTING MOTOR

REF. NO.	PART NO.	DESCRIPTION	USA	CAN				REMARKS
1	55X–81800–51	STARTING MOTOR ASSY	1	1				
2	55X–81826–50	.BOLT	2	2				
3	5J3–81847–50	.O-RING	1	1				
4	22J–81801–50	.BRUSH SET	1	1				
5	55X–81855–50	.SPRING, BRUSH	2	2				
6	5J3–81846–50	.SCREW	2	2				
7	22J–81847–50	.O-RING	1	1				
8	91312–06035	BOLT	2	2				
9	92902–06200	WASHER	1	1				

FIG. 33 HANDLE SWITCH & LEVER

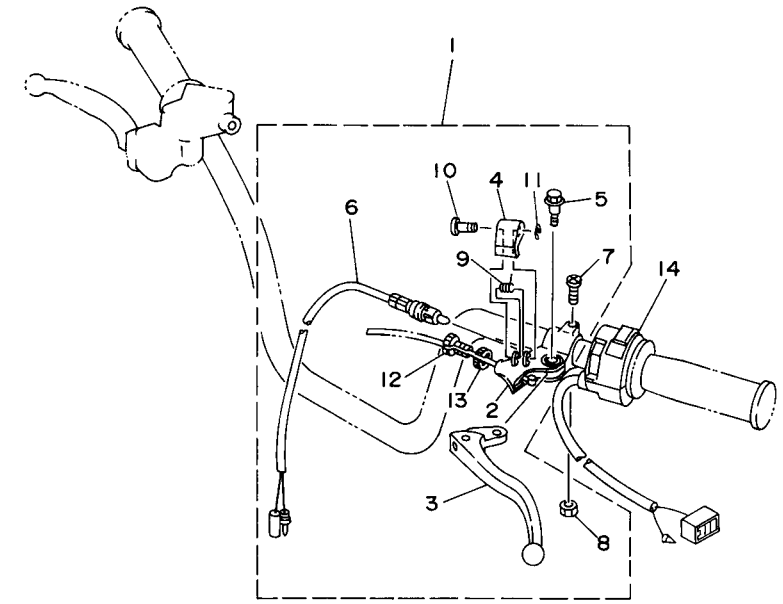

4EM9100-5340

REF. NO.	PART NO.	DESCRIPTION	USA	CAN				REMARKS
1	5TH–82910–01	LEVER HOLDER ASSY (LEFT)	1	1				
2	3FA–82911–01	.HOLDER, LEVER 1	1	1				
3	23X–83912–00	.LEVER 1	1	1				
4	3FA–83965–00	.LEVER, LOCK	1	1				
5	90109–06799	.BOLT	1	1				
6	1YW–83980–00	.FRONT STOP SWITCH ASSY	1	1				
7	98507–06020	.SCREW, PAN HEAD	1	1				
8	95607–06100	.NUT, U	1	1				
9	3FA–83966–00	.SPRING, RETURN	1	1				
10	3FA–83967–00	.PIN, LOCK 1	1	1				
11	3FA–26466–00	.RING, SNAP	1	1				
12	90123–08046	.BOLT	1	1				
13	90179–08148	.NUT	1	1				
14	4EM–83975–00	SWITCH, HANDLE 2	1	1				

FIG. 34 ELECTRICAL 1

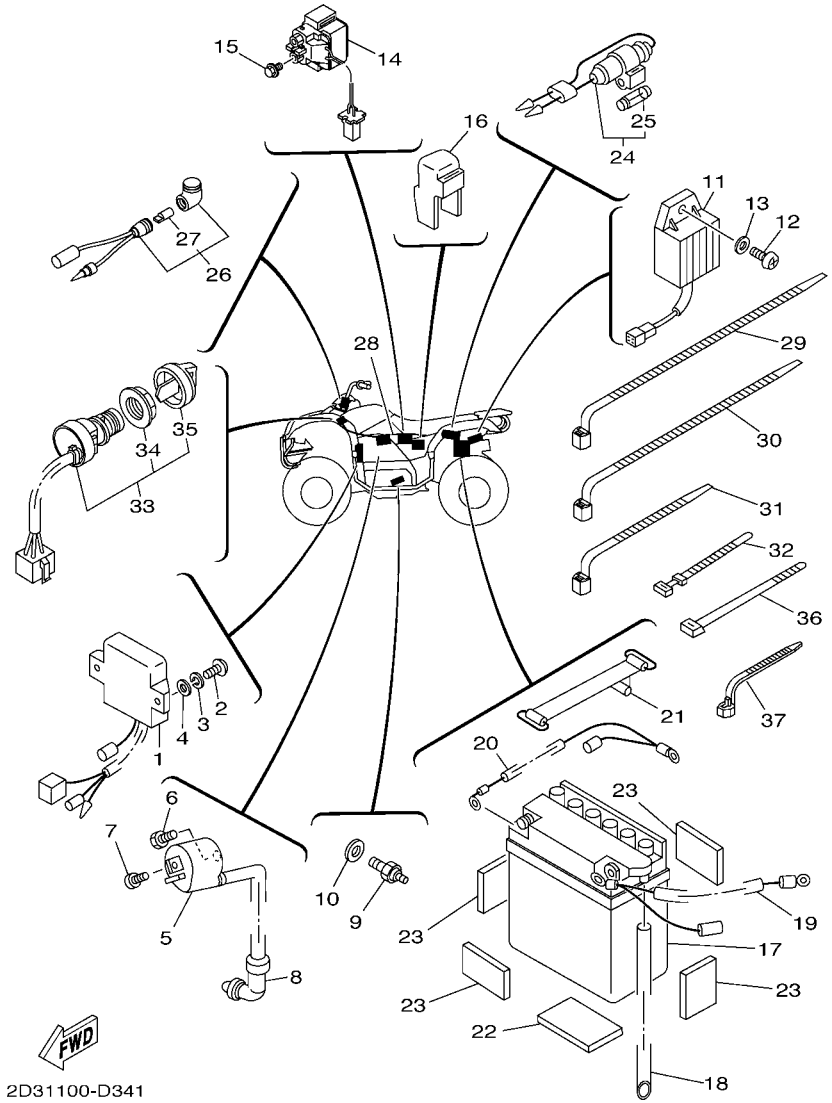

REF. NO.	PART NO.	DESCRIPTION	USA	CAN				REMARKS
1	4EM–85540–10	C.D.I. UNIT ASSY	1	1				
2	92502–06020	SCREW, PAN HEAD	2	2				
3	92902–06100	WASHER, SPRING	2	2				
4	92902–06600	WASHER, PLATE	2	2				
5	4KJ–82310–10	IGNITION COIL ASSY	1	1				
6	97002–06016	BOLT	1	1				
7	90153–06034	SCREW, HEXAGON	1	1				
8	55X–82370–00	PLUG CAP ASSY	1	1				
9	3GB–82540–01	NEUTRAL SWITCH ASSY	1	1				
10	90430–10148	GASKET	1	1				
11	5TH–81960–01	RECTIFIER & REGULATOR ASSY	1	1				
12	92502–06016	SCREW, PAN HEAD	1	1				
13	92902–06600	WASHER, PLATE	1	1				
14	3MW–81940–01	STARTER RELAY ASSY	1	1				
15	95022–06008	BOLT, FLANGE	2	2				
16	1RL–81950–92	RELAY ASSY	1	1				
17	55X–82110–61	BATTERY ASSY (GS 12N7D-3B)	1	1				
18	90445–085E0	HOSE (L450)	1	1				
19	55X–82115–01	WIRE, PLUS LEAD	1	1				
20	3GB–82116–00	WIRE, MINUS LEAD	1	1				
21	4J2–82131–01	BAND, BATTERY	1	1				
22	55X–82122–00	SEAT, BATTERY	1	1				
23	29W–82123–00	SEAT, BATTERY	4	4				
24	3GB–82150–00	FUSE HOLDER ASSY	1	1				
25	3GB–82151–00	.FUSE (5A)	2	2				
26	4KB–83530–00	PILOT LIGHT ASSY	1	1				GREEN (NEUTRAL)
27	5GH–83516–00	.BULB (14V-1.7W)	1	1				

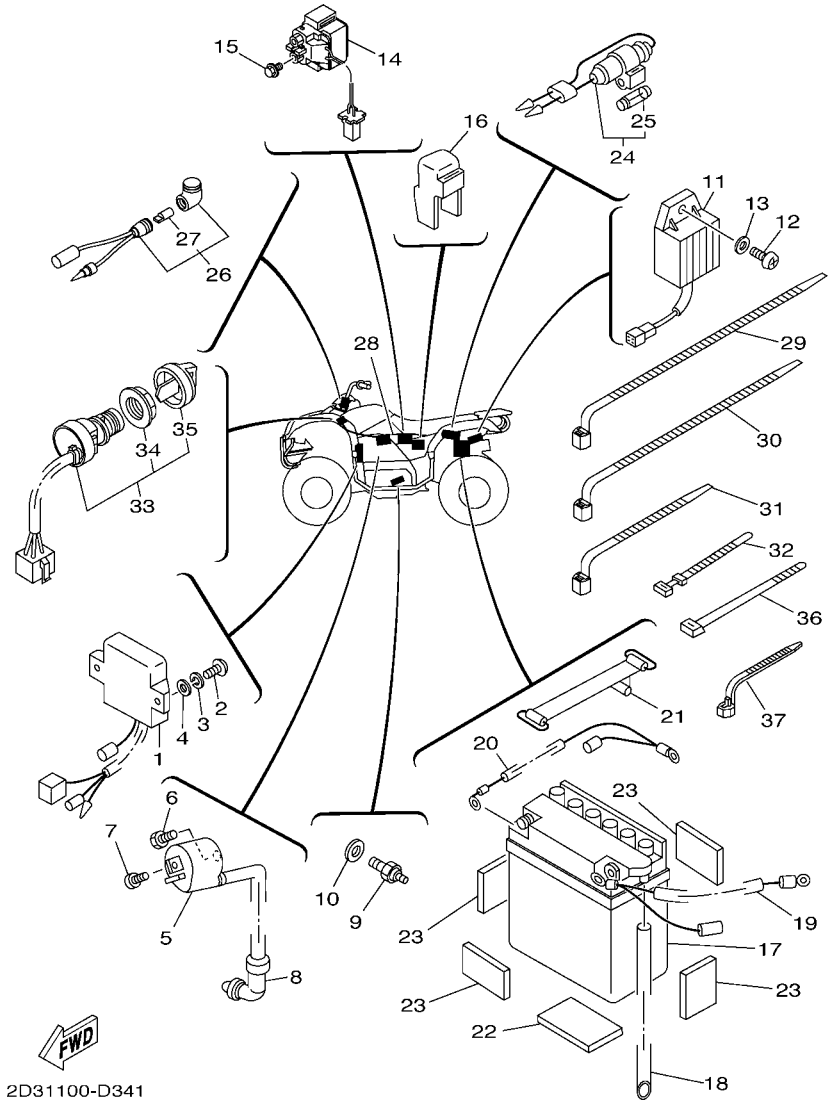

FIG. 34 ELECTRICAL 1

REF. NO.	PART NO.	DESCRIPTION	USA	CAN				REMARKS
28	5TH–82590–00	WIRE HARNESS ASSY	1	1				
29	90460–15126	CLAMP, HOSE	1	1				
30	90464–12045	CLAMP	1	1				
31	90464–13073	CLAMP	3	3				
32	437–83936–01	BAND, SWITCH CORD	1	1				
33	4GB–82510–11	MAIN SWITCH ASSY	1	1				
34	3HN–82569–00	.NUT, MAIN SWITCH	1	1				
35	3HN–82579–00	.CAP, KEY	1	1				
36	90465–10098	CLAMP	1	1				
37	90464–15195	CLAMP	1	1				

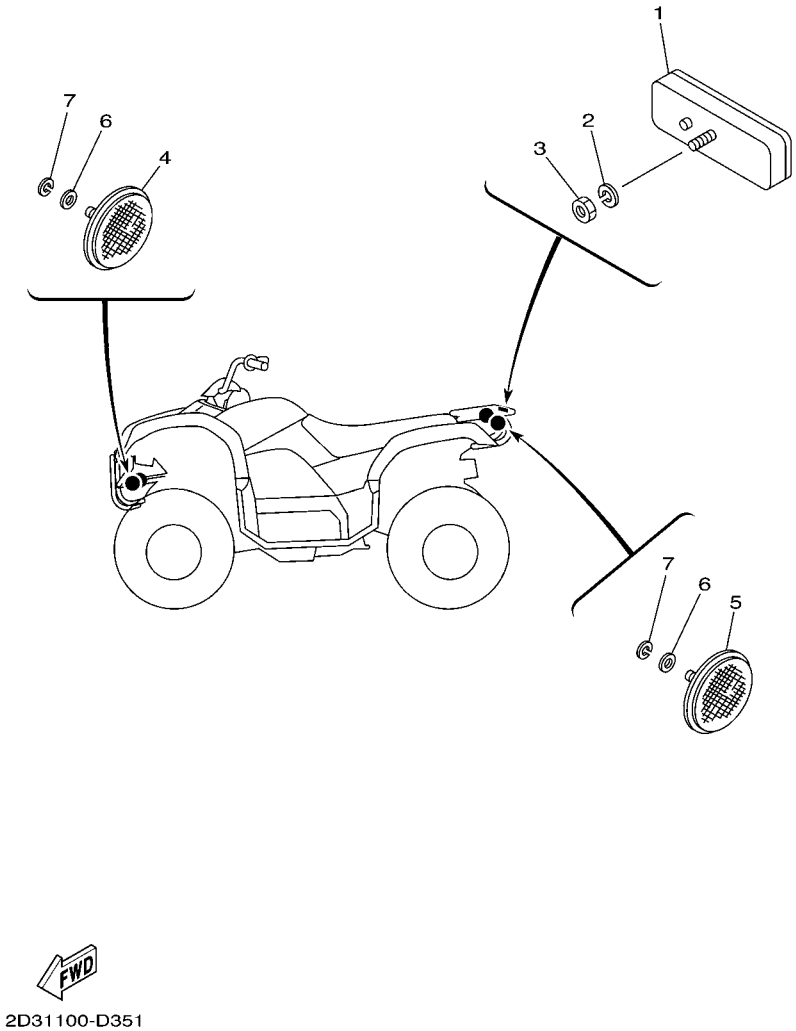

FIG. 35 ELECTRICAL 2

REF. NO.	PART NO.	DESCRIPTION	USA	CAN				REMARKS
1	3Y6–85130–02	REAR REFLECTOR ASSY	1	1				
2	92902–05100	WASHER, SPRING	1	1				
3	95302–05600	NUT	1	1				
4	2EK–85111–00	REFLECTOR, FRONT 1		2				
5	449–85131–02	REFLECTOR, REAR 1		2				
6	92902–05200	WASHER		4				
7	92902–05100	WASHER, SPRING		4				

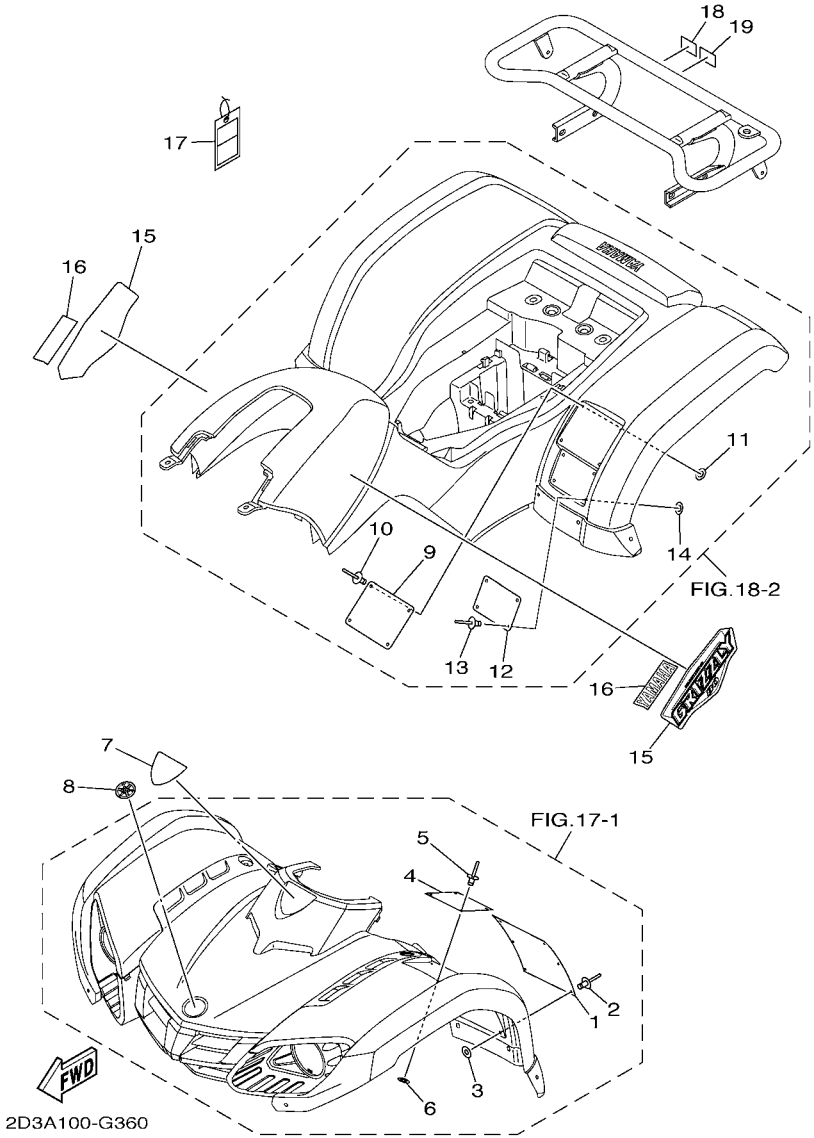

FIG. 36 EMBLEM & LABEL 1

REF. NO.	PART NO.	DESCRIPTION	USA	CAN				REMARKS
1	5FE–21568–01	LABEL, WARNING	1					ENGLISH
2	90267–32004	RIVET, BLIND	6					
3	90201–03008	WASHER, PLATE	6					
4	4EM–21697–31	LABEL, CAUTION 2	1					ENGLISH
5	90267–32004	RIVET, BLIND	4					
6	90201–03008	WASHER, PLATE	4					
7	3B4–26232–00	EMBLEM 3D	1					
8	5KM–2175B–00	TUNING FORK MARK	1					
9	4EM–21696–11	LABEL, CAUTION	1					ENGLISH
10	90267–32004	RIVET, BLIND	4					
11	90201–03008	WASHER, PLATE	4					
12	5FE–2151H–01	LABEL 5	1					ENGLISH
13	90267–32004	RIVET, BLIND	4					
14	90201–03008	WASHER, PLATE	4					
15	2D3–2173E–80	GRAPHIC 1	2					
16	4ES–2153E–30	EMBLEM, YAMAHA	2					
17	4EM–2819R–00	TAG, WARNING	1					
18	3MX–24875–A0	LABEL 1	1					ENGLISH
19	3LD–24877–A0	LABEL, CAUTION	1					ENGLISH

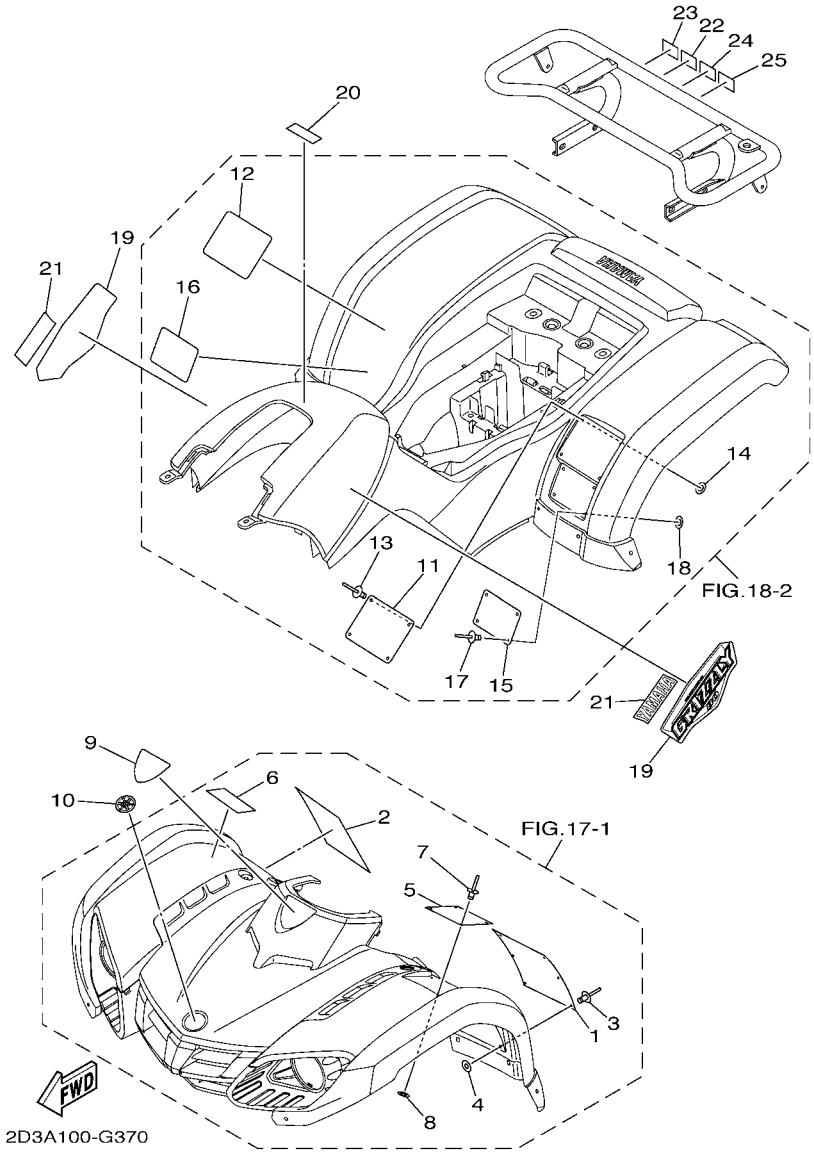

FIG. 37 EMBLEM & LABEL 2

REF. NO.	PART NO.	DESCRIPTION	USA	CAN				REMARKS
1	5FE–21568–01	LABEL, WARNING		1				ENGLISH
2	4WU–21568–10	LABEL, WARNING		1				FRENCH
3	90267–32004	RIVET, BLIND		6				
4	90201–03008	WASHER, PLATE		6				
5	4EM–21697–31	LABEL, CAUTION 2		1				ENGLISH
6	4EM–21697–20	LABEL, CAUTION 2		1				FRENCH
7	90267–32004	RIVET, BLIND		4				
8	90201–03008	WASHER, PLATE		4				
9	3B4–26232–00	EMBLEM 3D		1				
10	5KM–2175B–00	TUNING FORK MARK		1				
11	4EM–21696–11	LABEL, CAUTION		1				ENGLISH
12	4EM–21696–B0	LABEL, CAUTION		1				FRENCH
13	90267–32004	RIVET, BLIND		4				
14	90201–03008	WASHER, PLATE		4				
15	5FE–2151H–01	LABEL 5		1				ENGLISH
16	4WU–2151H–10	LABEL 5		1				FRENCH
17	90267–32004	RIVET, BLIND		4				
18	90201–03008	WASHER, PLATE		4				
19	2D3–2173E–80	GRAPHIC 1		2				
20	4SH–2416E–00	LABEL, CAUTION CANADA		1				ENGLISH
21	4ES–2153E–30	EMBLEM, YAMAHA		2				
22	3MX–24875–A0	LABEL 1		1				ENGLISH
23	3MX–24875–B0	LABEL 1		1				FRENCH
24	3LD–24877–A0	LABEL, CAUTION		1				ENGLISH
25	3LD–24877–B0	LABEL, CAUTION		1				FRENCH

PART NO.	GRID NO.
35T–11110–01	B – 2
22F–11134–10	B – 2
2D3–11166–00	B – 10
59V–11167–00	B – 10
55X–11181–00	B – 2
22F–11185–10	B – 2
22F–11186–10	B – 2
812–11198–00	B – 6
214–11198–01	C – 10
22K–11311–02	B – 2
22F–11351–01	B – 2
22K–11400–01	B – 3
22K–11422–00	B – 3
55X–11610–00	B – 3
55X–11610–20	B – 3
55X–11610–40	B – 3
55X–11631–00–96	B – 3
22K–11633–01	B – 3
55X–11636–00	B – 3
55X–11638–00	B – 3
22K–11651–02	B – 3
22F–11681–00	B – 3
2D3–12111–00	B – 4
22F–12114–00	B – 4
22F–12116–00	B – 4
22F–12117–02	B – 4
22F–12118–01	B – 4
2HX–12119–00	B – 4
2D3–12121–00	B – 4
22F–12151–10	B – 4
22F–12156–00	B – 4
22F–12159–00	B – 4
55X–12170–00	B – 5
50M–12176–00	B – 5
22F–12217–01	B – 5
22F–12231–01	B – 5
22F–12241–00	B – 5
2FJ–13300–00	B – 6
46J–13324–00	B – 3
46J–13325–00	B – 6
22F–13329–01	B – 6
22F–13411–01	B – 6
22M–13450–10	B – 12
55X–13586–00	B – 7
22K–13595–00	B – 7
5TH–14101–11	B – 7
22F–14103–00	B – 7
22K–14104–00	B – 7

PART NO.	GRID NO.
2HX–14112–35	B – 7
260–14131–00	B – 7
4EM–14141–78	B – 8
22F–14142–12	B – 7
55X–14146–00	B – 7
22K–14147–00	B – 7
18A–1414E–30	B – 7
22F–14150–00	B – 8
802–14161–00	B – 7
22F–14169–00	B – 7
22F–14184–00	B – 7
22F–14185–00	B – 8
127–14186–00	B – 7
12R–14191–00	B – 7
24W–14193–00	B – 8
55X–14196–00	B – 8
26H–14197–00	B – 7
55X–14198–00	B – 8
5TH–14412–00	C – 6
2D3–14419–00	C – 6
31A–14435–00	C – 6
55X–14436–00	C – 6
5TH–14436–00	C – 6
2HX–14437–01	C – 6
55X–14451–00	C – 6
5TH–14452–00	C – 6
3GB–14453–00	B – 8
59V–14457–00	C – 6
55X–14458–00	C – 6
55X–14472–01	C – 6
5TH–14477–00	C – 6
3DM–14613–00	B – 9
22F–14651–00	B – 2
5TH–14711–00	B – 9
55X–14752–00	B – 9
2HX–1490J–10	B – 7
55X–14937–00	B – 8
22F–14991–00	B – 7
2FJ–15100–01	B – 10
3GB–15362–00	C – 10
55X–15362–04	B – 11
2N4–15371–00	C – 10
22F–15383–01	B – 10
22F–15411–01	B – 11
22F–15417–00	B – 11
2FJ–15421–00	B – 11
4EM–15443–01	D – 10
3GB–15451–00	B – 11

PART NO.	GRID NO.
3GB–15461–00	B – 11
2HX–15517–10	B – 12
2HX–15520–00	B – 12
22M–15570–10	B – 12
22M–15580–10	B – 12
3AY–15583–00	B – 12
22K–16111–00	B – 13
3GB–16150–00	B – 13
22F–16153–40	B – 13
22F–16163–00	B – 14
122–16164–00	B – 13
22F–16342–01	B – 14
22K–16356–00	B – 14
22F–16357–01	B – 13
22F–16362–01	B – 14
22F–16382–00	B – 14
22F–16383–00	B – 14
22F–16399–00	B – 14
22K–16520–00	B – 13
22F–16521–00	B – 13
3E5–16521–00	B – 13
22F–16524–01	B – 13
517–16524–10	B – 13
517–16524–20	B – 13
517–16524–30	B – 13
22F–16550–00	B – 13
22K–16590–00	B – 13
2HX–17121–00	B – 15
55X–17131–00	B – 15
3GB–17211–00	B – 15
55X–17231–00	B – 15
55X–17241–00	B – 15
3GB–17402–00	B – 15
2HX–17411–01	B – 15
3GB–17508–00	C – 2
22F–17531–00–15	C – 2
22F–17531–00–30	C – 2
22F–17531–00–50	C – 2
22F–17537–00	C – 2
22F–17551–00	C – 2
22F–17556–01	C – 2
22F–18101–03	C – 4
2D3–18110–10	C – 4
132–18113–01	C – 4
278–18127–01	C – 4
29F–18140–00	C – 3
2MK–18511–00	C – 3
29F–18512–00	C – 3

PART NO.	GRID NO.
22F–18531–00	C – 3
4EM–18540–00	C – 3
136–18542–00	C – 3
296–18561–00	C – 3
22F–18562–01	C – 3
2D3–21110–10	C – 5
5TH–21268–01	C – 5
5FE–2151H–01	E – 4
	E – 5
4WU–2151H–10	E – 5
4ES–2153E–30	E – 4
	E – 5
5FE–21568–01	E – 4
	E – 5
4WU–21568–10	E – 5
4EM–21696–11	E – 4
	E – 5
4EM–21696–B0	E – 5
4EM–21697–20	E – 5
4EM–21697–31	E – 4
	E – 5
2D3–2173E–80	E – 4
	E – 5
5KM–2175B–00	E – 4
	E – 5
5TH–2177C–20	C – 8
3GB–22110–00–33	C – 9
307–22123–00	C – 15
3GB–22123–00	C – 5
3GB–22155–00	C – 5
3GB–22156–00	C – 9
55X–22189–00	C – 9
3GB–2219X–00	C – 9
3GB–22210–00–33	C – 12
59V–22216–00	C – 12
2HX–2331U–00	C – 15
2HX–23350–00–33	C – 15
2D3–23391–00	C – 7
3GB–23448–00	C – 15
3GB–23501–10	C – 15
3GB–23502–10	C – 15
2NL–23517–00	C – 15
3GB–23570–00–33	C – 15
2D3–23741–00	C – 6
2D3–23742–00	C – 6
1UY–23812–00	C – 13
4EM–23813–20	C – 13
8G5–23814–00	C – 13

PART NO.	GRID NO.
8K1–23814–00	C – 13
3GB–23831–00	C – 13
55X–23841–01	C – 13
52H–23845–01	C – 13
2D3–23858–00	C – 13
3GB–23868–00	C – 13
1UY–23894–01	C – 13
2HX–24110–10	D – 2
5TH–2414H–00	D – 2
4SH–2416E–00	E – 5
2HX–24181–00	D – 2
55X–24500–02	D – 2
4X8–24512–00	D – 2
3AC–24523–00	D – 2
3AJ–24534–01	D – 2
2FJ–24610–00	D – 2
2D3–2470F–00	D – 3
2D3–24710–01	D – 3
4K0–24774–A0	D – 3
4K0–24775–00	D – 3
29U–24776–00	D – 3
2D3–24842–00	D – 11
2D3–24842–10	D – 11
3MX–24875–A0	E – 4
	E – 5
3MX–24875–B0	E – 5
3LD–24877–A0	E – 4
	E – 5
3LD–24877–B0	E – 5
2FJ–25111–10	D – 4
3FA–25117–00	D – 4
2FJ–25121–00	D – 4
52H–2513A–00	D – 4
3GB–25151–00	D – 4
2FJ–25155–00	D – 4
2FJ–25156–00	D – 5
2FJ–25169–00	D – 4
2FJ–25180–00–35	D – 4
22W–25181–01	C – 9
3GB–25185–00	D – 4
3GB–25311–00–33	D – 6
3GB–25317–00	D – 6
3GB–2531E–00	D – 6
3GB–25326–00	D – 6
23F–2533A–00	D – 6
55X–2533H–00	D – 6
3GB–25343–10	D – 6
3Y6–25351–00	D – 6

PART NO.	GRID NO.
55X–25355–00	D – 6
3GB–25367–00	D – 7
3GB–25382–00	D – 6
55X–25383–10	D – 6
2FJ–25390–00–35	D – 6
390–25412–01	D – 6
3GB–25715–00	D – 7
2D3–26111–00	D – 8
5TH–26124–30	D – 8
5TH–26124–40	D – 8
3B4–26232–00	E – 4
	E – 5
5LP–26241–00	D – 8
5TH–26250–10	D – 8
3GB–2625E–01	D – 8
3GB–2625G–00	D – 8
3GB–2625H–00	D – 8
3GB–2628F–00	D – 8
3GB–2628G–02	D – 8
3GB–26311–02	D – 8
3GB–26341–01	D – 8
20E–26343–00	D – 8
	D – 10
3GB–26347–00	D – 8
3GB–26361–03	D – 9
3FA–26466–00	D – 14
371–27114–00	D – 3
2D3–27211–10	D – 10
3GB–27231–00	D – 10
2D3–27411–10	D – 10
2D3–2741A–00	D – 10
2D3–27421–10	D – 10
2D3–27453–01	D – 10
2D3–27463–01	D – 10
3GB–28100–00	C – 5
1NV–2811A–01	C – 5
4EM–2819R–00	E – 4
2D3–28309–00	C – 7
5GT–2836B–10	D – 8
2D3–2845N–00	D – 11
2D3–2845N–10	D – 11
3GB–46110–20	C – 10
3GB–46120–00	C – 10
22F–46123–01	C – 11
3GB–46151–00	C – 10
3GB–46172–01	C – 10
2HX–46180–00	C – 10
22F–46187–00	C – 10

PART NO.	GRID NO.
55X–81313–M0	D – 12
55X–81800–51	D – 13
22J–81801–50	D – 13
55X–81826–50	D – 13
5J3–81846–50	D – 13
22J–81847–50	D – 13
5J3–81847–50	D – 13
55X–81855–50	D – 13
3MW–81940–01	D – 15
1RL–81950–92	D – 15
5TH–81960–01	D – 15
55X–82110–61	D – 15
55X–82115–01	D – 15
3GB–82116–00	D – 15
55X–82122–00	D – 15
29W–82123–00	D – 15
4J2–82131–01	D – 15
3GB–82150–00	D – 15
3GB–82151–00	D – 15
4KJ–82310–10	D – 15
55X–82370–00	D – 15
4GB–82510–11	E – 2
3GB–82540–01	D – 15
3HN–82569–00	E – 2
3HN–82579–00	E – 2
5TH–82590–00	E – 2
5TH–82910–01	D – 14
3FA–82911–01	D – 14
5GH–83516–00	D – 15
4KB–83530–00	D – 15
23X–83912–00	D – 14
5TH–83922–00	D – 8
437–83936–01	E – 2
3FA–83965–00	D – 14
3FA–83966–00	D – 14
3FA–83967–00	D – 14
4EM–83975–00	D – 14
1YW–83980–00	D – 14
2D3–84121–00	C – 7
2D3–8412B–00	C – 7
2EK–85111–00	E – 3
3Y6–85130–02	E – 3
449–85131–02	E – 3
5G3–85520–M1	D – 12
4EM–85540–10	D – 15
2FM–85550–M1	D – 12
4EM–85560–10	D – 12
22K–85595–M0	D – 12

PART NO.	GRID NO.
22K–W1141–00	B – 3
22K–W1657–00	B – 13
2D3–W2151–00	C – 6
2D3–W2151–10	C – 6
2D3–W215C–00	C – 6
2D3–W215C–10	C – 6
2D3–W2161–00	C – 8
2D3–W2161–10	C – 8
2D3–W216C–00	C – 8
2D3–W216C–10	C – 8
3FA–W253E–00	D – 6
4KN–W253E–11	D – 4
90101–06046	D – 4
90101–06562	D – 6
90101–06576	B – 9
90101–08055	B – 5
90101–08058	C – 11
90101–12033	C – 15
90105–10131	C – 12
90105–10262	C – 15
90105–10274	C – 15
90105–12062	C – 15
90109–06172	C – 7
	D – 10
90109–06238	C – 3
90109–06243	D – 8
90109–06799	D – 14
90113–06009	B – 5
90114–08001	D – 4
	D – 6
90114–10017	D – 6
90116–06042	B – 10
90116–08084	D – 6
90119–06137	C – 6
	C – 8
90123–08046	D – 14
90123–08106	D – 9
90149–06021	C – 6
90149–06108	D – 2
90151–06070	B – 14
90153–06034	D – 15
90154–05021	C – 7
90155–06001	B – 6
90159–06041	B – 7
90170–05302	B – 4
90170–10010	C – 13
90170–14284	B – 13
90170–28011	D – 7

PART NO.	GRID NO.
90171–10003	C – 15
90171–12001	D – 7
90171–14002	D – 4
90176–06014	B – 2
90179–06054	B – 5
90179–08030	D – 9
90179–08148	D – 14
90179–10023	D – 12
90179–12004	C – 2
90179–12007	B – 13
90179–28009	D – 7
90179–42480	C – 2
90179–55464	C – 10
90183–050A7	C – 7
90183–06053	C – 6
90183–060A7	C – 7
90185–10019	C – 9
	C – 13
90185–10022	C – 12
	C – 15
90185–12010	C – 15
90201–03008	E – 4
	E – 5
90201–05042	D – 10
90201–06090	D – 2
90201–066F0	B – 2
90201–08043	D – 10
90201–08048	B – 5
	B – 9
90201–10036	C – 13
90201–10057	C – 15
90201–101A4	D – 12
90201–12045	D – 7
90201–12050	C – 15
90201–124F8	B – 15
90201–125F7	C – 2
90201–127F4	C – 4
90201–132G5	B – 15
90201–14586	D – 4
90201–145M4	D – 8
90201–15018	D – 10
90201–186F1	B – 5
90208–12015	B – 13
90209–11269	B – 11
90215–14249	B – 13
90240–06076	D – 10
90249–12008	D – 8
	D – 10

PART NO.	GRID NO.
90267–32004	E – 4
	E – 5
90267–50010	C – 6
90269–07076	C – 6
90280–03017	B – 3
90334–14037	B – 5
90336–28053	C – 13
90340–12097	B – 6
90340–14132	C – 10
90340–18092	B – 5
90380–07118	B – 14
90381–15040	C – 5
90381–17067	C – 15
90387–06153	C – 8
90387–06202	C – 6
90387–062G8	B – 14
90387–062G9	B – 14
90387–066J1	D – 2
90387–066V8	D – 8
90387–07598	D – 2
90387–090R0	C – 13
90387–175R2	D – 4
90430–06014	B – 10
90430–06166	B – 10
90430–10148	D – 15
90445–073F9	C – 10
90445–083J4	D – 2
90445–085E0	D – 15
90445–10044	D – 2
90445–11418	C – 13
90460–15126	E – 2
90460–43053	B – 8
90460–75020	C – 9
90460–85135	C – 9
90464–12045	E – 2
90464–13073	E – 2
90464–15195	E – 2
90465–10098	E – 2
90467–07029	C – 10
90467–090A2	D – 2
90467–13064	B – 10
90467–220A1	C – 6
90480–01400	D – 2
90480–18290	D – 2
90501–03799	B – 12
90501–08511	D – 9
90501–10245	D – 10
90501–105A5	B – 13

PART NO.	GRID NO.
90501–10710	B – 5
90501–10782	D – 8
90501–135A4	B – 13
90504–06030	D – 2
90506–08122	C – 4
90506–15260	D – 4
	D – 6
90506–16318	D – 10
90507–15038	D – 7
90508–10775	D – 8
90508–20454	D – 3
90508–20576	C – 3
90508–32563	C – 4
90560–17146	B – 13
90560–20196	B – 12
90560–23355	C – 10
91312–05025	D – 8
91312–06035	D – 13
91401–20012	D – 10
91401–20020	C – 13
	C – 15
91401–25025	D – 7
91401–30025	D – 4
91A20–07010	B – 8
92502–06012	D – 7
92502–06016	D – 15
92502–06020	D – 15
92901–04100	D – 12
92901–05100	D – 12
92902–04100	B – 7
92902–04200	C – 6
92902–05100	E – 3
92902–05200	E – 3
92902–06100	D – 3
	D – 7
	D – 15
92902–06200	D – 10
	D – 13
92902–06600	B – 9
	B – 14
	D – 15
92902–08100	C – 11
92907–06100	D – 2
93101–10142	B – 11
93101–24110	C – 2
93102–07292	B – 14
93102–12106	C – 4
93102–17271	C – 10

PART NO.	GRID NO.
93102–19276	D – 12
93102–23275	D – 4
93102–28022	C – 10
93102–35349	D – 7
93102–36409	D – 6
93102–38383	D – 6
93102–40367	D – 4
93104–10076	B – 14
93112–31011	C – 13
93210–06564	B – 5
	B – 10
93210–07003	C – 3
93210–12327	D – 4
93210–14104	C – 10
	D – 6
93210–15414	C – 5
93210–19123	B – 11
93210–25552	B – 7
93210–26606	D – 7
93210–40407	C – 5
93210–43713	C – 10
93210–44704	B – 2
93210–50553	C – 2
93210–63556	B – 2
93211–02703	D – 12
93211–066A9	C – 10
93306–00105	B – 15
93306–00308	D – 4
93306–00612	D – 6
93306–07801	C – 10
93306–20301	B – 15
93306–20309	C – 2
93306–30101	B – 15
93306–30306	C – 10
93306–30433	B – 3
93311–20952	C – 10
93311–32353	B – 3
93315–23208	C – 3
93317–21236	C – 2
93340–21209	C – 4
93341–22302	B – 13
93420–26077	B – 13
93430–04002	D – 3
93430–08007	C – 3
93440–10109	B – 2
93440–11128	B – 14
93440–16089	B – 15
93450–14088	B – 3

PART NO.	GRID NO.
93450–42112	B – 13
93451–08094	B – 13
93505–08030	B – 13
93604–20156	C – 4
93604–22050	C – 3
93610–10174	B – 12
93700–06004	C – 5
	C – 15
93900–00022	D – 4
	D – 6
94107–07009	D – 4
94108–07009	D – 6
94580–25082	B – 5
94701–00366	B – 2
95022–06008	D – 15
95022–06085	B – 2
95022–08014	D – 10
95302–05600	E – 3
95302–05700	D – 8
95302–06600	B – 14
	D – 4
	D – 6
95302–06800	B – 5
95302–08600	D – 7
95302–10700	C – 13
95602–06100	D – 8
95602–08200	C – 5
95607–06100	D – 14
95702–05300	D – 10
95702–06500	B – 9
95702–08500	D – 4
	D – 6
95802–06012	D – 10
95802–06016	D – 9
95802–08012	D – 8
95812–06016	B – 10
	C – 10
95812–06025	B – 10
95812–08012	D – 11
95812–08014	C – 9
	D – 11
95812–08016	B – 9
95812–08120	C – 5
95812–12020	D – 10
95822–06020	C – 2
95822–08055	C – 13
97002–06012	D – 3
97002–06016	D – 15

PART NO.	GRID NO.
97022–06020	C – 4
97022–08060	C – 13
97027–06030	D – 2
97702–40116	C – 6
98501–04006	D – 12
98501–05010	D – 12
98502–04008	B – 7
98502–04010	B – 7
98502–04014	B – 7
98502–04016	D – 8
98502–06010	B – 9
98502–06012	B – 10
98502–06014	C – 3
98502–06016	B – 2
	B – 14
98502–06020	D – 9
98502–06030	B – 11
98502–06035	B – 11
98502–06040	B – 11
98502–06045	B – 10
	B – 11
98502–06060	B – 10
98502–06075	B – 10
98507–03008	D – 2
98507–06020	D – 14
98511–04012	D – 12
98511–04020	D – 12
98701–06018	B – 12
98702–06016	D – 12
98902–05016	D – 10
99001–04600	B – 14
99001–05600	B – 6
99001–09600	C – 3
99009–12400	B – 15
99009–17400	C – 10
99009–17500	C – 10
99530–08012	B – 2
	B – 10
99530–10114	B – 11
99530–10120	B – 11
99530–12016	B – 10

PART NO.	GRID NO.

PART NO.	GRID NO.

PART NO.	GRID NO.

PART NO.	GRID NO.