YAMAHA

# PARTS CATALOGUE

## YFM70RSPX (1S3M) U.S.A.
## YFM70RSPX (1S3N) CANADA
## YFM70RSPX (1S3P) EUROPE
## YFM70RSPX (1S3M) OCEANIA

1G1S3-100EA

(2G1S3-100EA)

YAMAHA GENUINE Parts & Accessories

A2

YFM70RSPX
PARTS CATALOGUE
©2007 by Yamaha Motor Co., Ltd.
1st edition, May 2007
All rights reserved.
Any reprinting or unauthorized use
without the written permission of
Yamaha Motor Co., Ltd.
is expressly prohibited.

A3

# FOREWORD

This Parts Catalogue is related to the parts for the model(s) on the cover page. When you are ordering replacement parts, please refer to this Parts Catalogue and quote both part numbers and part names correctly.

1. Modifications or additions which have been made after the issue of the Parts Catalogue will be announced in the Parts News.
   It is advisable that you make the necessary corrections to the Parts Catalogue according to the Parts News.

2. Abbreviations
   The following abbreviations are used in this Parts Catalogue.

   "UR" Use specified parts number.
   "UN" Use as many as needed.
   "AP" Alternate Parts
   "LM" Locally Made (Parts need to be ordered locally)
   "F#" Frame No. (Applicable machine No.)
   "O/S" Over Size

3. The number of components for assembly
   - Parts, which are to be supplied in an assembly, are listed with a dot (.) in front of the part name as shown below.
   - The numeral appearing to the right of each component part indicates the quantity of parts for each assembly unit.

| PART NO. | DESCRIPTION | Q'TY | REMARKS |
|---|---|---|---|
| 2F5–83310–60 | FRONT FLASHER LIGHT ASSY | 2 | |
| 115–83311–60 | .BULB (6V–18W) | 1 | |

4. Applicable colours of graphics are represented in the "REMARKS" as shown below.

| PART NO. | DESCRIPTION | Q'TY | REMARKS |
|---|---|---|---|
| 2N4–24110–00–X5 | FUEL TANK COMP. | 2 | MXR |
| 3J1–24240–10 | .GRAPHIC, FUEL TANK | 1 | FOR MXR |

5. Note that the illustrations for reference in finding parts numbers are not to be used for assembling. When assembling, please use the applicable service manual.

6. The asterisk (*) before a reference number indicates modified items after the first edition.

7. Applicable Serial No.

Engine Serial No.

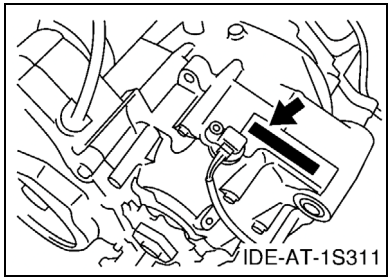


Frame Serial No.

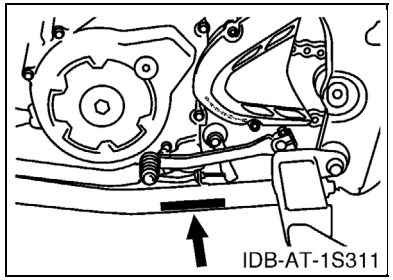


8. Applicable Colour Code (The (*) mark shows Model colour.)

| Abbreviation | Colour Name | Colour Code |
|---|---|---|
| BWS1(*) | BLUISH WHITE SOLID 1 | 0892 |
| | | |
| | | |
| | | |
| | | |
| | | |
| | | |
| | | |
| | | |
| | | |

9. Quantity Column Information

| Column No. | Name Of Q'ty Column | Destination |
|---|---|---|
| 1 | USA | U.S.A. |
| 2 | CAN | CANADA |
| 3 | EUR | EUROPE |
| 4 | OCE | OCEANIA |
| | | |

# MODEL LABEL

(1) A label called “Model Label” is affixed in the location as indicated in (3) below. When using this parts catalogue, please be sure to cross–reference the “model code – production code No.” in the catalogue with the “model code – production code No.” indicated on the Model Label affixed onto the product concerned.

(2) “Model Label” Indication

| | |
|---|---|
| a b<br>○ xxxx – xxx<br>● x c | a: Model Type Code<br>b: Production Code No.<br>c: Colouring Type |

| |
|---|
| ○ 4TW1–010<br>● A |

(3) Model Label Affixing Location

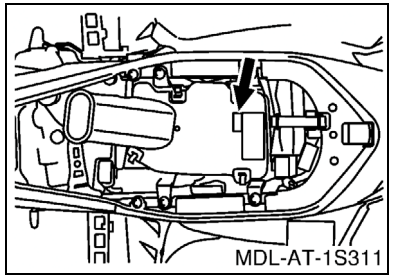


(4) Colouring Information

| Model Code | Colouring Type Code | Colour Code | Colour Name | Abbreviation |
|---|---|---|---|---|
| 1S3M | A | 0892 | BLUISH WHITE SOLID 1 | BWS1 |
| 1S3N | A | 0892 | BLUISH WHITE SOLID 1 | BWS1 |
| 1S3P | A | 0892 | BLUISH WHITE SOLID 1 | BWS1 |
| | | | | |
| | | | | |
| | | | | |
| | | | | |
| | | | | |
| | | | | |
| | | | | |

(5) Model Code – Production Code Number of Model Listed in This Parts Catalogue

| Model Code | Production Code No. | Country (destination) |
|---|---|---|
| 1S3M | 010 | U.S.A. |
| | 020 | AUSTRALIA |
| | | NEW ZEALAND |
| 1S3N | 010 | CANADA |
| 1S3P | 010 | EUROPE |
| | | |
| | | |
| | | |
| | | |
| | | |
| | | |
| | | |
| | | |
| | | |
| | | |
| | | |
| | | |
| | | |
| | | |
| | | |
| | | |
| | | |
| | | |
| | | |
| | | |
| | | |
| | | |

| Model Code | Production Code No. | Country (destination) |
|---|---|---|
| | | |
| | | |
| | | |
| | | |
| | | |
| | | |
| | | |
| | | |
| | | |
| | | |
| | | |
| | | |
| | | |
| | | |
| | | |
| | | |
| | | |
| | | |
| | | |
| | | |
| | | |
| | | |
| | | |

# CONTENTS

## ENGINE


CYLINDER HEAD ..... B2
CYLINDER ..... B3
CRANKSHAFT & PISTON ..... B4
VALVE ..... B5
CAMSHAFT & CHAIN ..... B6
WATER PUMP ..... B7
RADIATOR & HOSE ..... B8
OIL PUMP ..... B9
INTAKE ..... B11
THROTTLE BODY ASSY 1 ..... B13
EXHAUST ..... B14
CRANKCASE ..... B15
CRANKCASE COVER 1 ..... C2
STARTER ..... C3
CLUTCH ..... C4
TRANSMISSION ..... C6
SHIFT CAM & FORK ..... C8


## CHASSIS


FRAME ..... C10
FRONT FENDER ..... C12
REAR FENDER ..... C13
OIL TANK ..... C15
REAR ARM ..... D2
REAR SUSPENSION ..... D5
STEERING ..... D6
FRONT SUSPENSION & WHEEL ..... D7
FUEL TANK ..... D9
SEAT ..... D11
FRONT WHEEL ..... D12
FRONT BRAKE CALIPER ..... D13
REAR WHEEL ..... D15
REAR BRAKE CALIPER ..... E2
STEERING HANDLE & CABLE ..... E4
FRONT MASTER CYLINDER ..... E6
STAND & FOOTREST ..... E7
REAR MASTER CYLINDER ..... E8
GUARD ..... E10
GENERATOR ..... E11
STARTING MOTOR ..... E12
HEADLIGHT ..... E13
TAILLIGHT ..... E14
TAILLIGHT 2 ..... E15
HANDLE SWITCH & LEVER ..... F2
ELECTRICAL 1 ..... F3
ELECTRICAL 2 ..... F6
EMBLEM & LABEL 1 ..... F7
EMBLEM & LABEL 2 ..... F8
EMBLEM & LABEL 3 ..... F9
EMBLEM & LABEL 4 ..... F10


## ALTERNATE PARTS


ALTERNATE FOR METER ..... F11


## INDEX


NUMERICAL INDEX ..... M1

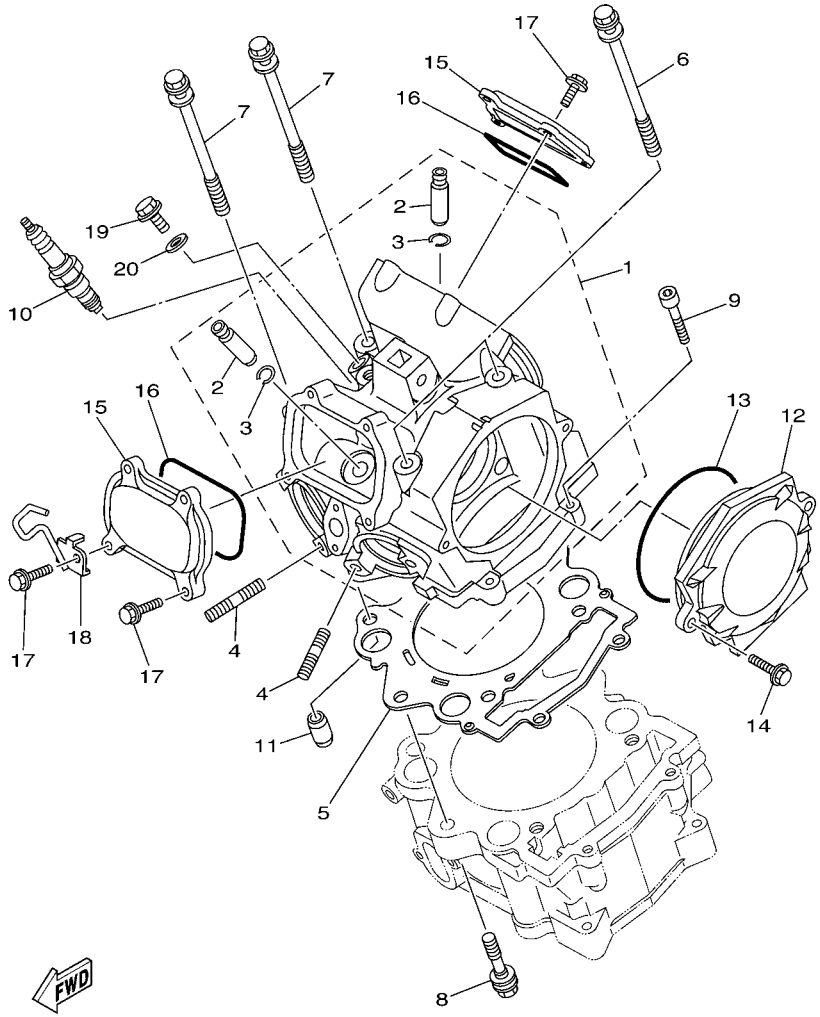


1S31100-E010

## FIG. 1 CYLINDER HEAD

| REF. NO. | PART NO. | DESCRIPTION | USA | CAN | EUR | OCE | | REMARKS |
|---|---|---|---|---|---|---|---|---|
| 1 | 1S3–11101–00 | CYLINDER HEAD ASSY | 1 | 1 | 1 | 1 | | |
| 2 | 4G0–11133–11 | .GUIDE, VALVE 1 | 4 | 4 | 4 | 4 | | |
| 3 | 93440–10085 | .CIRCLIP | 4 | 4 | 4 | 4 | | |
| 4 | 95612–08625 | BOLT, STUD | 4 | 4 | 4 | 4 | | |
| 5 | 3B4–11181–00 | GASKET, CYLINDER HEAD 1 | 1 | 1 | 1 | 1 | | |
| 6 | 90109–09003 | BOLT | 2 | 2 | 2 | 2 | | |
| 7 | 90109–09002 | BOLT | 2 | 2 | 2 | 2 | | |
| 8 | 90109–09005 | BOLT | 2 | 2 | 2 | 2 | | |
| 9 | 91312–06030 | BOLT | 2 | 2 | 2 | 2 | | |
| 10 | 94701–00330 | PLUG, SPARK (NGK CR8E) | 1 | 1 | 1 | 1 | | |
| 11 | 93612–16254 | PIN, DOWEL | 2 | 2 | 2 | 2 | | |
| 12 | 1S3–11185–00 | COVER, CYLINDER HEAD SIDE 1 | 1 | 1 | 1 | 1 | | |
| 13 | 93210–96601 | O-RING | 1 | 1 | 1 | 1 | | |
| 14 | 95022–06020 | BOLT, FLANGE | 2 | 2 | 2 | 2 | | |
| 15 | 1S3–11186–00 | COVER, CYLINDER HEAD SIDE 2 | 2 | 2 | 2 | 2 | | |
| 16 | 93210–78544 | O-RING | 2 | 2 | 2 | 2 | | |
| 17 | 95022–06020 | BOLT, FLANGE | 8 | 8 | 8 | 8 | | |
| 18 | 1S3–1131E–00 | HOLDER 1 | 1 | 1 | 1 | 1 | | |
| 19 | 90401–08004 | BOLT, UNION | 1 | 1 | 1 | 1 | | |
| 20 | 90430–08119 | GASKET | 1 | 1 | 1 | 1 | | |

## FIG. 2 CYLINDER

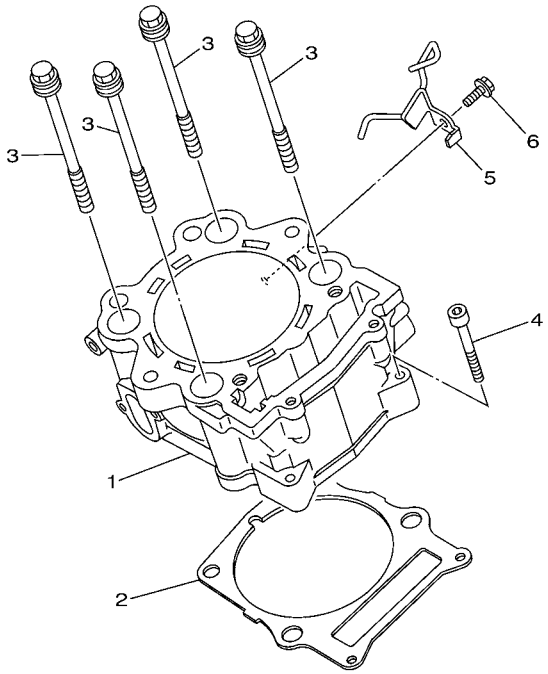

1S31100-E020

| REF. NO. | PART NO. | DESCRIPTION | USA | CAN | EUR | OCE | | REMARKS |
|---|---|---|---|---|---|---|---|---|
| 1 | 1S3–11310–00 | CYLINDER | 1 | 1 | 1 | 1 | | |
| 2 | 1S3–11351–00 | GASKET, CYLINDER | 1 | 1 | 1 | 1 | | |
| 3 | 90119–10023 | BOLT, WITH WASHER | 4 | 4 | 4 | 4 | | |
| 4 | 91312–06040 | BOLT | 2 | 2 | 2 | 2 | | |
| 5 | 1S3–11395–00 | HOLDER | 1 | 1 | 1 | 1 | | |
| 6 | 95822–06012 | BOLT, FLANGE | 1 | 1 | 1 | 1 | | |

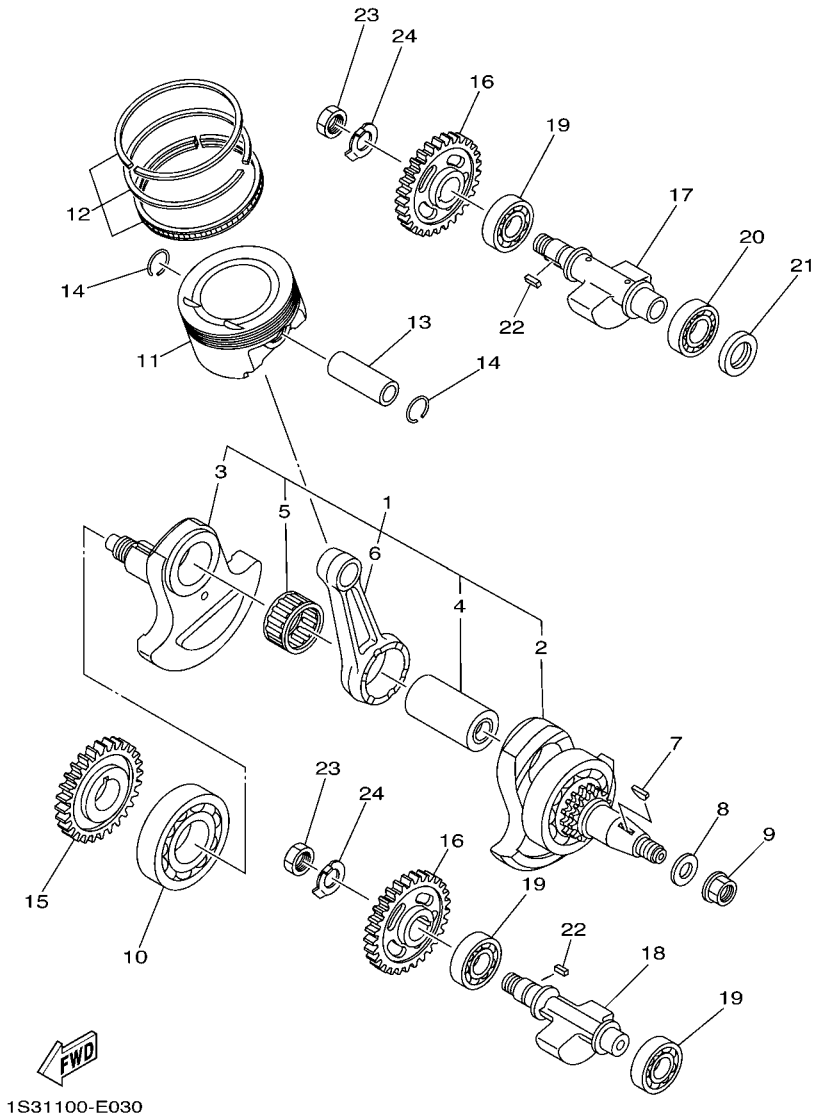


## FIG. 3 CRANKSHAFT & PISTON

| REF. NO. | PART NO. | DESCRIPTION | USA | CAN | EUR | OCE | | REMARKS |
|---|---|---|---|---|---|---|---|---|
| 1 | 1S3–11400–00 | CRANKSHAFT ASSY | 1 | 1 | 1 | 1 | | |
| 2 | 1S3–11401–09 | .CRANK SUB ASSY 1 | 1 | 1 | 1 | 1 | | |
| 3 | 1S3–11422–00 | .CRANK 2 | 1 | 1 | 1 | 1 | | |
| 4 | 1S3–11681–00 | .PIN, CRANK 1 | 1 | 1 | 1 | 1 | | |
| 5 | 93310–84017 | .BEARING | 1 | 1 | 1 | 1 | | |
| 6 | 1S3–11651–00 | .ROD, CONNECTING | 1 | 1 | 1 | 1 | | |
| 7 | 90280–05001 | KEY, WOODRUFF | 1 | 1 | 1 | 1 | | |
| 8 | 90201–16013 | WASHER, PLATE | 1 | 1 | 1 | 1 | | |
| 9 | 90179–16004 | NUT | 1 | 1 | 1 | 1 | | |
| 10 | 93306–30810 | BEARING | 1 | 1 | 1 | 1 | | |
| 11 | 1S3–11631–10 | PISTON (STD) | 1 | 1 | 1 | 1 | | |
| 12 | 1S3–11603–10 | PISTON RING SET (STD) | 1 | 1 | 1 | 1 | | |
| 13 | 5VK–11633–00 | PIN, PISTON | 1 | 1 | 1 | 1 | | |
| 14 | 93450–24154 | CIRCLIP | 2 | 2 | 2 | 2 | | |
| 15 | 1S3–11536–00 | GEAR, DRIVE | 1 | 1 | 1 | 1 | | |
| 16 | 1S3–11531–00 | GEAR, BALANCE WEIGHT | 2 | 2 | 2 | 2 | | |
| 17 | 1S3–11454–00 | WEIGHT 1 | 1 | 1 | 1 | 1 | | |
| 18 | 1S3–11464–00 | WEIGHT 2 | 1 | 1 | 1 | 1 | | |
| 19 | 93306–20481 | BEARING | 3 | 3 | 3 | 3 | | |
| 20 | 93306–00502 | BEARING | 1 | 1 | 1 | 1 | | |
| 21 | 93101–25106 | OIL SEAL | 1 | 1 | 1 | 1 | | |
| 22 | 90282–05005 | KEY, STRAIGHT | 2 | 2 | 2 | 2 | | |
| 23 | 90170–16326 | NUT | 2 | 2 | 2 | 2 | | |
| 24 | 90215–16221 | WASHER, LOCK | 2 | 2 | 2 | 2 | | |

## FIG. 4 VALVE

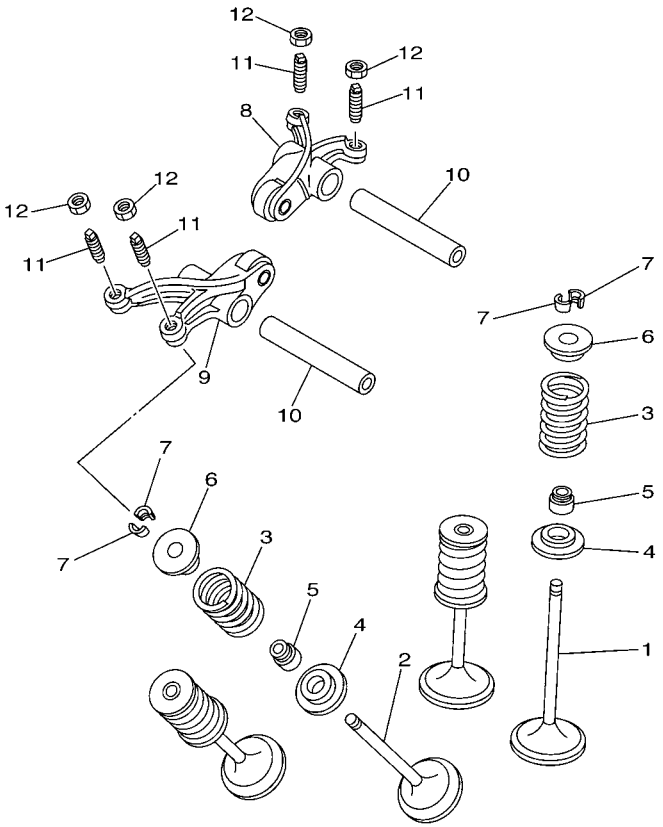


1S31100-E040

| REF. NO. | PART NO. | DESCRIPTION | USA | CAN | EUR | OCE | | REMARKS |
|---|---|---|---|---|---|---|---|---|
| 1 | 5VK–12111–00 | VALVE, INTAKE | 2 | 2 | 2 | 2 | | |
| 2 | 5VK–12121–00 | VALVE, EXHAUST | 2 | 2 | 2 | 2 | | |
| 3 | 1S3–12113–00 | SPRING, VALVE INNER | 4 | 4 | 4 | 4 | | |
| 4 | 3YF–12116–00 | SEAT, VALVE SPRING | 4 | 4 | 4 | 4 | | |
| 5 | 5H0–12119–00 | SEAL, VALVE STEM | 4 | 4 | 4 | 4 | | |
| 6 | 3YF–12117–01 | RETAINER, VALVE SPRING | 4 | 4 | 4 | 4 | | |
| 7 | 4G0–12118–00 | COTTER, VALVE | 8 | 8 | 8 | 8 | | |
| 8 | 5VK–12151–00 | ARM, VALVE ROCKER | 1 | 1 | 1 | 1 | | |
| 9 | 5VK–12161–00 | ARM, VALVE ROCKER 2 | 1 | 1 | 1 | 1 | | |
| 10 | 5VK–12146–00 | SHAFT, ROCKER | 2 | 2 | 2 | 2 | | |
| 11 | 5XT–12159–00 | SCREW, VALVE ADJUSTING | 4 | 4 | 4 | 4 | | |
| 12 | 90170–06128 | NUT | 4 | 4 | 4 | 4 | | |

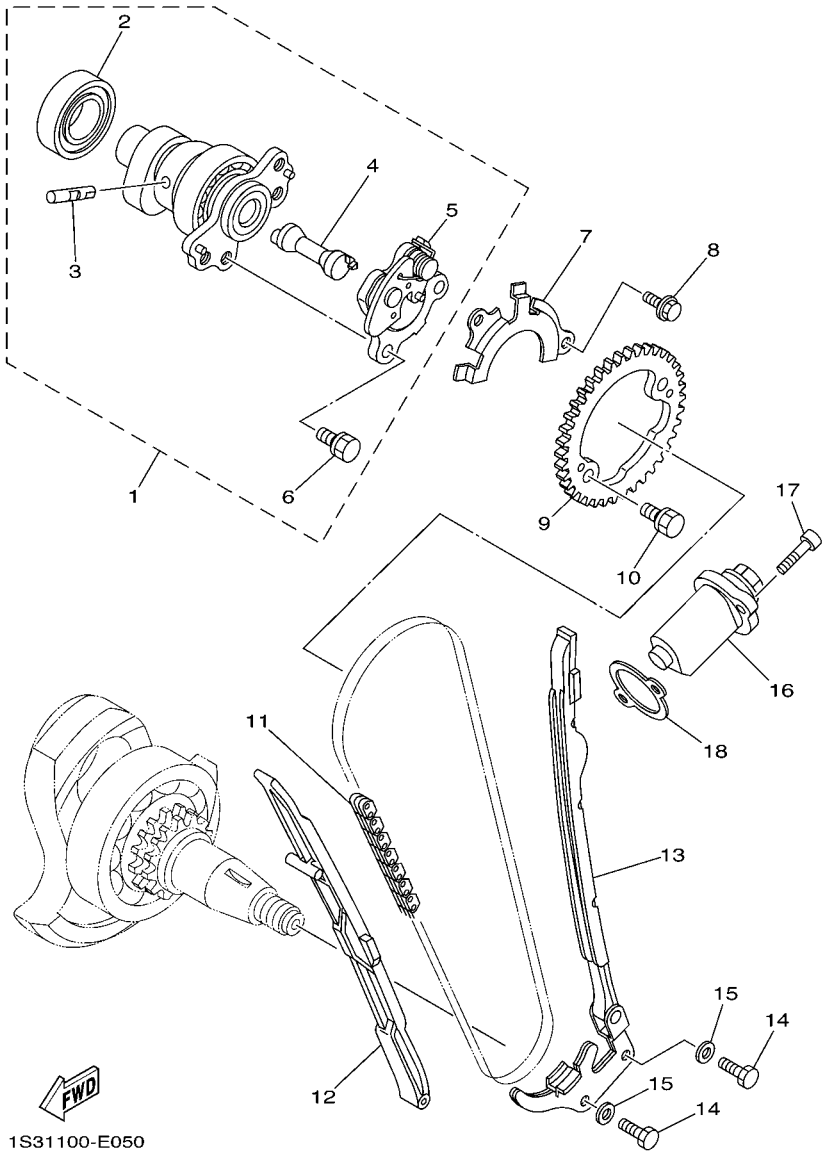


## FIG. 5 CAMSHAFT & CHAIN

| REF. NO. | PART NO. | DESCRIPTION | USA | CAN | EUR | OCE | | REMARKS |
|---|---|---|---|---|---|---|---|---|
| 1 | 1S3–12170–01 | CAMSHAFT ASSY 1 | 1 | 1 | 1 | 1 | | |
| 2 | 93306–07209 | .BEARING | 1 | 1 | 1 | 1 | | |
| 3 | 5VK–12284–00 | .PIN, DECOMPRESSION LEVER | 1 | 1 | 1 | 1 | | |
| 4 | 1S3–12290–00 | .LEVER, DECOMPRESSION SPRING | 1 | 1 | 1 | 1 | | |
| 5 | 1S3–12280–01 | .DECOMPRESSION ASSY | 1 | 1 | 1 | 1 | | |
| 6 | 90105–07004 | .BOLT, FLANGE | 2 | 2 | 2 | 2 | | |
| 7 | 5VK–1111F–00 | PLATE | 1 | 1 | 1 | 1 | | |
| 8 | 90105–06078 | BOLT, FLANGE | 2 | 2 | 2 | 2 | | |
| 9 | 1S3–12176–00 | SPROCKET, CAM CHAIN | 1 | 1 | 1 | 1 | | |
| 10 | 90105–07004 | BOLT, FLANGE | 2 | 2 | 2 | 2 | | |
| 11 | 94591–57126 | CHAIN (98XRH2010-126M) | 1 | 1 | 1 | 1 | | |
| 12 | 5VK–12231–00 | GUIDE, STOPPER 1 | 1 | 1 | 1 | 1 | | |
| 13 | 1S3–12241–00 | GUIDE, STOPPER 2 | 1 | 1 | 1 | 1 | | |
| 14 | 97022–06016 | BOLT | 2 | 2 | 2 | 2 | | |
| 15 | 92902–06600 | WASHER, PLATE | 2 | 2 | 2 | 2 | | |
| 16 | 3TB–12210–00 | TENSIONER ASSY, CAM CHAIN | 1 | 1 | 1 | 1 | | |
| 17 | 91312–06025 | BOLT | 2 | 2 | 2 | 2 | | |
| 18 | 4DW–12213–00 | GASKET, TENSIONER CASE | 1 | 1 | 1 | 1 | | |

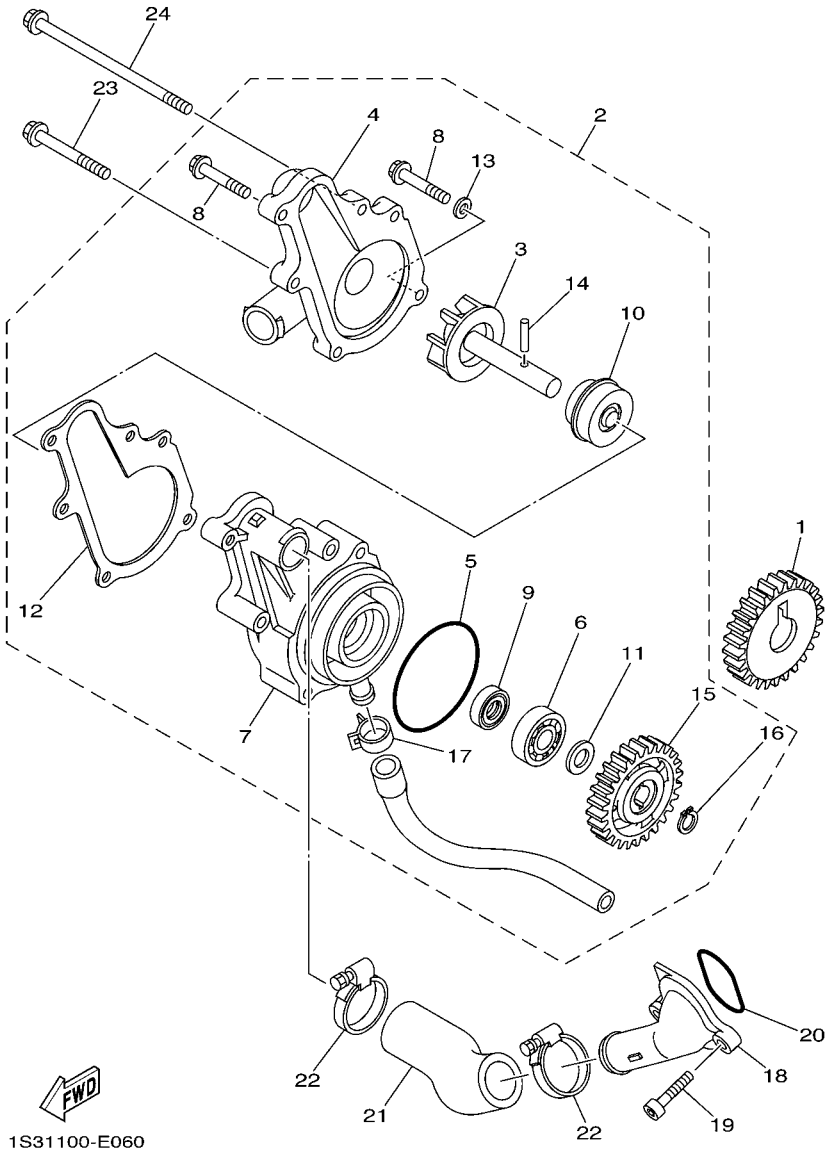


## FIG. 6 WATER PUMP

| REF. NO. | PART NO. | DESCRIPTION | USA | CAN | EUR | OCE | | REMARKS |
|---|---|---|---|---|---|---|---|---|
| 1 | 1S3–12436–00 | GEAR, DRIVE | 1 | 1 | 1 | 1 | | |
| 2 | 1S3–12420–00 | WATER PUMP ASSY | 1 | 1 | 1 | 1 | | |
| 3 | 1S3–12450–00 | .IMPELLER SHAFT ASSY | 1 | 1 | 1 | 1 | | |
| 4 | 1S3–12422–00 | .COVER, HOUSING | 1 | 1 | 1 | 1 | | |
| 5 | 93210–61750 | .O-RING | 1 | 1 | 1 | 1 | | |
| 6 | 93306–00106 | .BEARING | 1 | 1 | 1 | 1 | | |
| 7 | 1S3–12421–00 | .HOUSING, WATER PUMP | 1 | 1 | 1 | 1 | | |
| 8 | 95022–06025 | .BOLT, FLANGE | 3 | 3 | 3 | 3 | | |
| 9 | 93101–12173 | .OIL SEAL | 1 | 1 | 1 | 1 | | |
| 10 | 11H–12438–10 | .SEAL, MECHANICAL | 1 | 1 | 1 | 1 | | |
| 11 | 90201–12541 | .WASHER, PLATE | 1 | 1 | 1 | 1 | | |
| 12 | 1S3–12428–00 | .GASKET, HOUSING COVER 2 | 1 | 1 | 1 | 1 | | |
| 13 | 90430–06014 | .GASKET | 1 | 1 | 1 | 1 | | |
| 14 | 93603–16219 | .PIN, DOWEL | 1 | 1 | 1 | 1 | | |
| 15 | 5VK–12459–00 | .GEAR, IMPELLER SHAFT | 1 | 1 | 1 | 1 | | |
| 16 | 99009–12400 | .CIRCLIP | 1 | 1 | 1 | 1 | | |
| 17 | 90467–13062 | .CLIP | 1 | 1 | 1 | 1 | | |
| 18 | 1S3–12469–00 | JOINT 1 | 1 | 1 | 1 | 1 | | |
| 19 | 91312–06020 | BOLT | 2 | 2 | 2 | 2 | | |
| 20 | 93210–33786 | O-RING | 1 | 1 | 1 | 1 | | |
| 21 | 1S3–12577–00 | HOSE 2 | 1 | 1 | 1 | 1 | | |
| 22 | 90450–32015 | HOSE CLAMP ASSY | 2 | 2 | 2 | 2 | | |
| 23 | 95022–06050 | BOLT, FLANGE | 2 | 2 | 2 | 2 | | |
| 24 | 95022–06110 | BOLT, FLANGE | 1 | 1 | 1 | 1 | | |

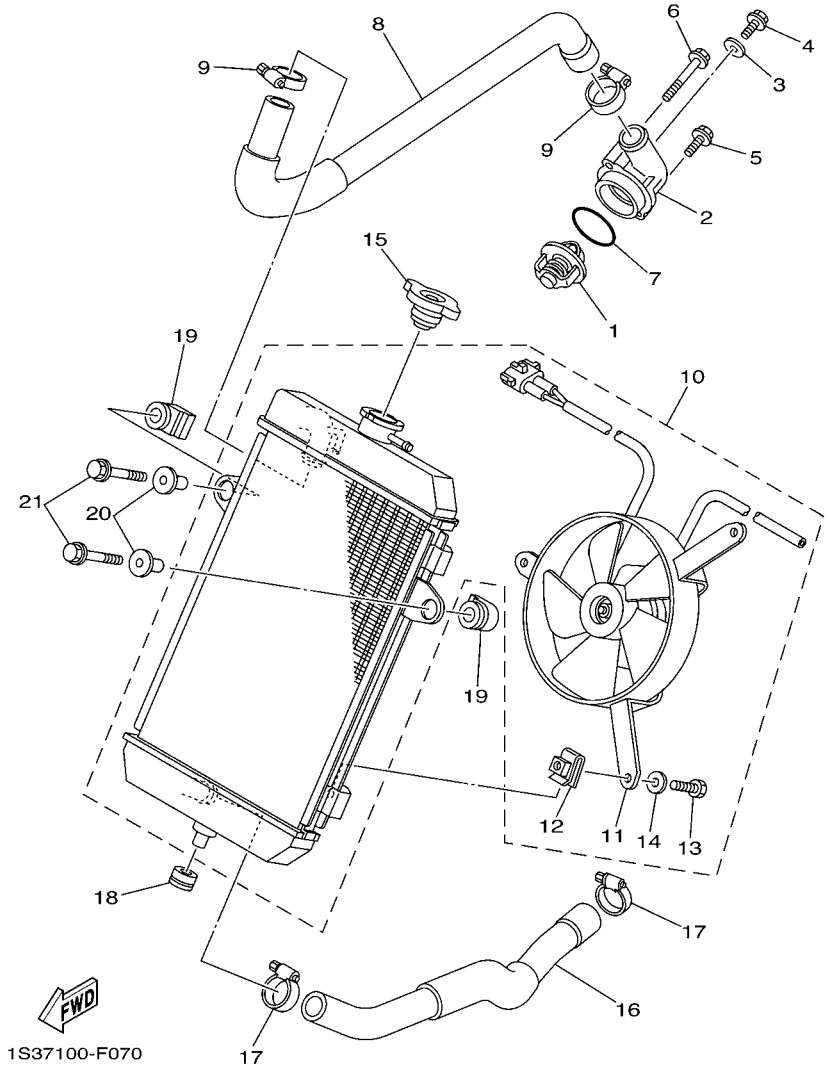


## FIG. 7 RADIATOR & HOSE

| REF. NO. | PART NO. | DESCRIPTION | USA | CAN | EUR | OCE | | REMARKS |
|---|---|---|---|---|---|---|---|---|
| 1 | 5VK–12410–00 | THERMOSTAT ASSY | 1 | 1 | 1 | 1 | | |
| 2 | 1S3–12413–00 | COVER, THERMOSTAT | 1 | 1 | 1 | 1 | | |
| 3 | 90430–06014 | GASKET | 1 | 1 | 1 | 1 | | |
| 4 | 95022–06010 | BOLT, FLANGE | 1 | 1 | 1 | 1 | | |
| 5 | 95022–06020 | BOLT, FLANGE | 1 | 1 | 1 | 1 | | |
| 6 | 95022–06045 | BOLT, FLANGE | 1 | 1 | 1 | 1 | | |
| 7 | 93210–41042 | O-RING | 1 | 1 | 1 | 1 | | |
| 8 | 1S3–12578–00 | HOSE 3 | 1 | 1 | 1 | 1 | | |
| 9 | 90450–32015 | HOSE CLAMP ASSY | 2 | 2 | 2 | 2 | | |
| 10 | 1S3–1240A–00 | RADIATOR ASSY | 1 | 1 | 1 | 1 | | |
| 11 | 1S3–12405–00 | .BLOWER ASSY | 1 | 1 | 1 | 1 | | |
| 12 | 1AA–12535–00 | .PLATE | 3 | 3 | 3 | 3 | | |
| 13 | 97017–06010 | .BOLT | 3 | 3 | 3 | 3 | | |
| 14 | 92907–06600 | .WASHER, PLATE | 3 | 3 | 3 | 3 | | |
| 15 | 22W–12462–00 | CAP, RADIATOR | 1 | 1 | 1 | 1 | | |
| 16 | 1S3–12579–00 | HOSE 4 | 1 | 1 | 1 | 1 | | |
| 17 | 90450–32015 | HOSE CLAMP ASSY | 2 | 2 | 2 | 2 | | |
| 18 | 90480–18330 | GROMMET | 1 | 1 | 1 | 1 | | |
| 19 | 1S3–12465–00 | DAMPER, RADIATOR | 2 | 2 | 2 | 2 | | |
| 20 | 90387–06166 | COLLAR | 2 | 2 | 2 | 2 | | |
| 21 | 95802–06030 | BOLT, FLANGE | 2 | 2 | 2 | 2 | | |

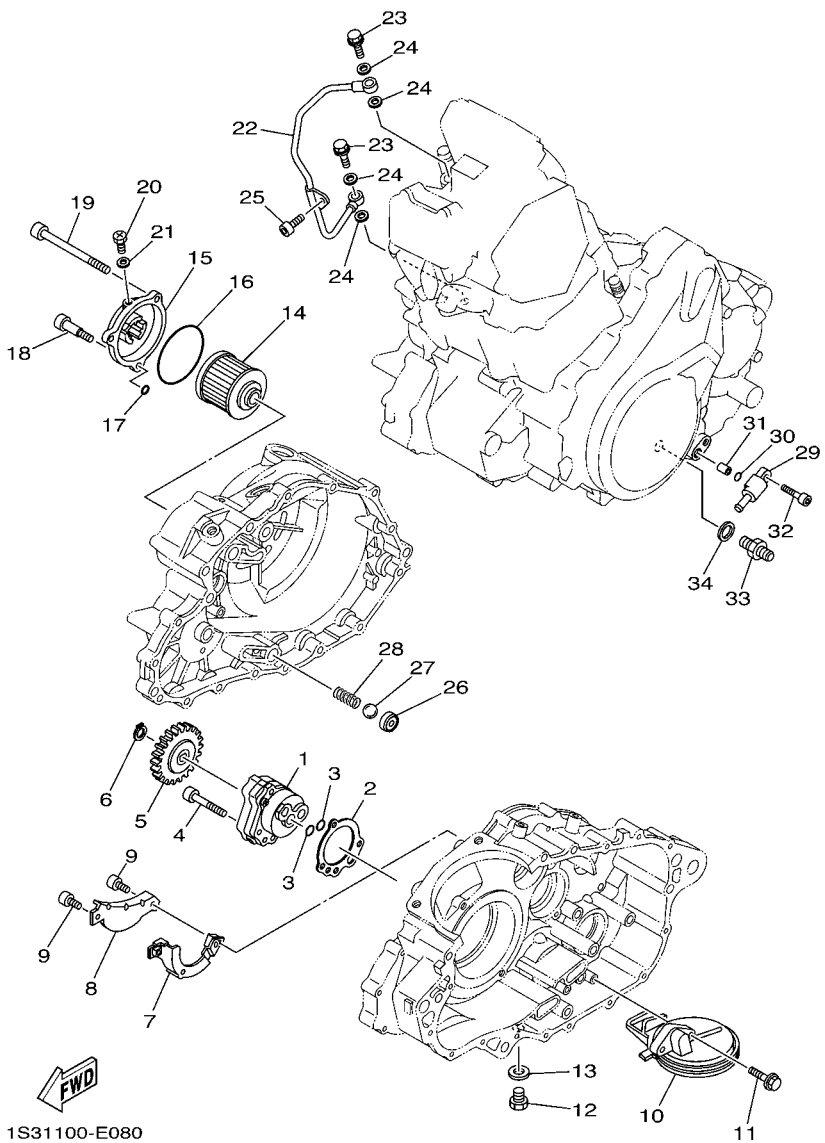


## FIG. 8 OIL PUMP

| REF. NO. | PART NO. | DESCRIPTION | USA | CAN | EUR | OCE | | REMARKS |
|---|---|---|---|---|---|---|---|---|
| 1 | 5LP–13300–00 | OIL PUMP ASSY | 1 | 1 | 1 | 1 | | |
| 2 | 5LP–13329–00 | GASKET, PUMP COVER | 1 | 1 | 1 | 1 | | |
| 3 | 93210–13361 | O-RING | 2 | 2 | 2 | 2 | | |
| 4 | 91312–06035 | BOLT | 3 | 3 | 3 | 3 | | |
| 5 | 3AJ–13325–00 | GEAR, PUMP DRIVEN | 1 | 1 | 1 | 1 | | |
| 6 | 99009–11400 | CIRCLIP | 1 | 1 | 1 | 1 | | |
| 7 | 1S3–13356–00 | COVER, PUMP 2 | 1 | 1 | 1 | 1 | | |
| 8 | 1S3–13327–00 | COVER, PUMP GEAR | 1 | 1 | 1 | 1 | | |
| 9 | 90110–05030 | BOLT, HEXAGON SOCKET HEAD | 2 | 2 | 2 | 2 | | |
| 10 | 1S3–13410–00 | STRAINER HOUSING ASSY | 1 | 1 | 1 | 1 | | |
| 11 | 90105–06082 | BOLT, FLANGE | 2 | 2 | 2 | 2 | | |
| 12 | 90340–14029 | PLUG, STRAIGHT SCREW | 1 | 1 | 1 | 1 | | |
| 13 | 214–11198–01 | GASKET | 1 | 1 | 1 | 1 | | |
| 14 | 4X7–13440–01 | ELEMENT ASSY, OIL CLEANER | 1 | 1 | 1 | 1 | | |
| 15 | 1S3–13447–00 | COVER, OIL ELEMENT | 1 | 1 | 1 | 1 | | |
| 16 | 93210–64297 | O-RING | 1 | 1 | 1 | 1 | | |
| 17 | 93210–07135 | O-RING | 1 | 1 | 1 | 1 | | |
| 18 | 90109–06169 | BOLT | 1 | 1 | 1 | 1 | | |
| 19 | 91312–06095 | BOLT | 2 | 2 | 2 | 2 | | |
| 20 | 90149–05018 | SCREW | 1 | 1 | 1 | 1 | | |
| 21 | 90430–05126 | GASKET | 1 | 1 | 1 | 1 | | |
| 22 | 1S3–13171–00 | PIPE, DELIVERY 2 | 1 | 1 | 1 | 1 | | |
| 23 | 90401–10024 | BOLT, UNION | 2 | 2 | 2 | 2 | | |
| 24 | 90430–10188 | GASKET | 4 | 4 | 4 | 4 | | |
| 25 | 91312–06012 | BOLT | 1 | 1 | 1 | 1 | | |
| 26 | 583–13113–00 | SEAT, CHECK BALL | 1 | 1 | 1 | 1 | | |
| 27 | 93503–08007 | BALL | 1 | 1 | 1 | 1 | | |

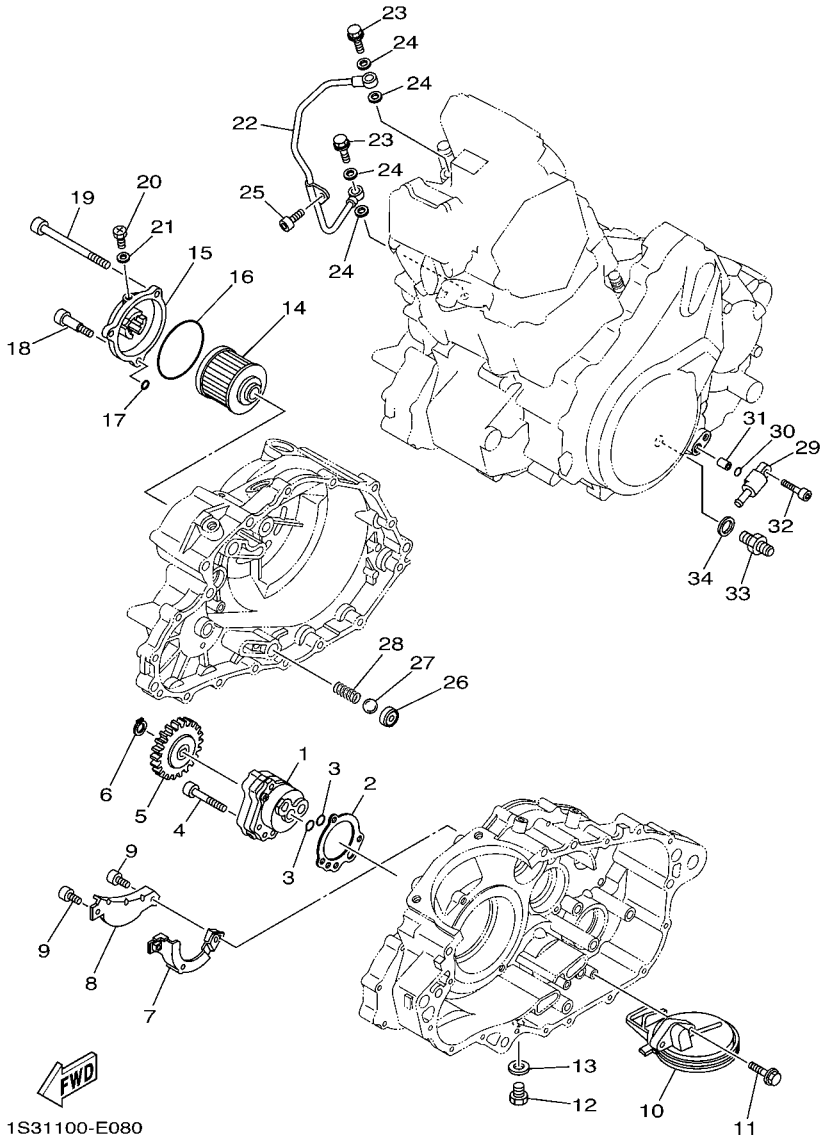


## FIG. 8 OIL PUMP

| REF. NO. | PART NO. | DESCRIPTION | USA | CAN | EUR | OCE | | REMARKS |
|---|---|---|---|---|---|---|---|---|
| 28 | 90501–043E0 | SPRING, COMPRESSION | 1 | 1 | 1 | 1 | | |
| 29 | 1S3–13416–00 | PIPE, OIL 1 | 1 | 1 | 1 | 1 | | |
| 30 | 93210–10197 | O-RING | 1 | 1 | 1 | 1 | | |
| 31 | 99530–10114 | PIN, DOWEL | 1 | 1 | 1 | 1 | | |
| 32 | 95022–06025 | BOLT, FLANGE | 1 | 1 | 1 | 1 | | |
| 33 | 1S3–13132–00 | JOINT | 1 | 1 | 1 | 1 | | |
| 34 | 90430–14043 | GASKET | 1 | 1 | 1 | 1 | | |

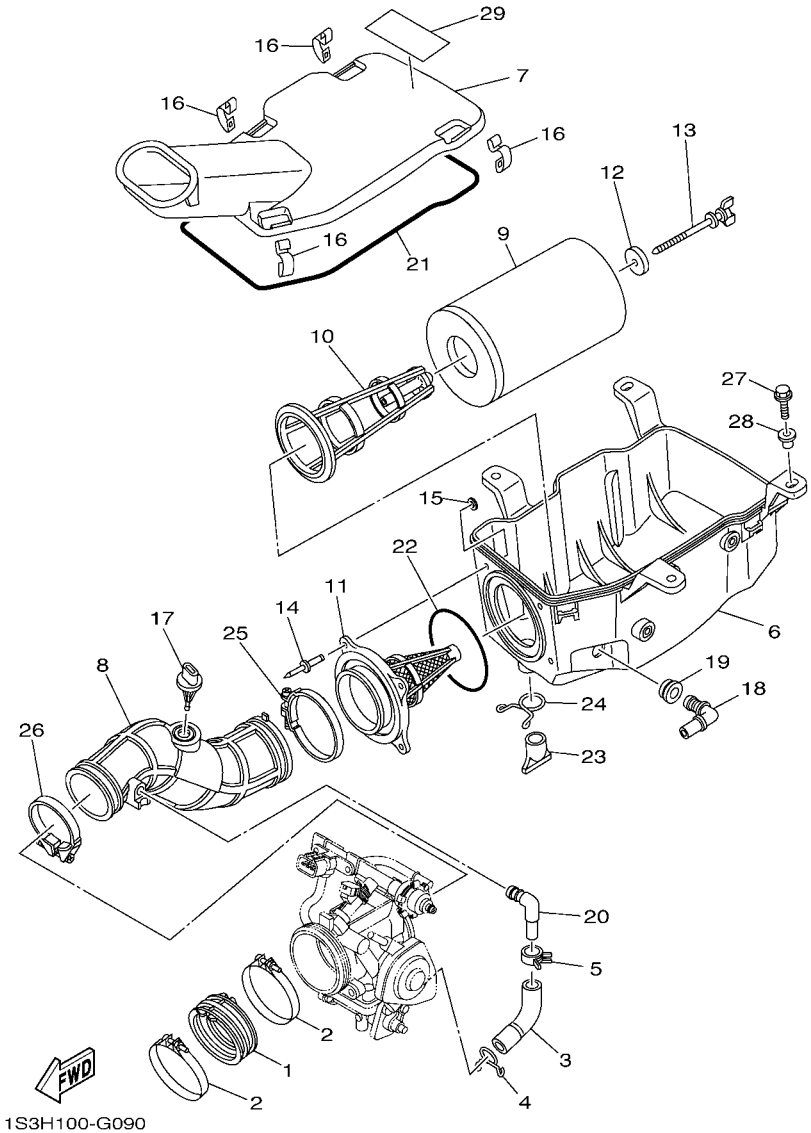


## FIG. 9 INTAKE

| REF. NO. | PART NO. | DESCRIPTION | USA | CAN | EUR | OCE | | REMARKS |
|---|---|---|---|---|---|---|---|---|
| 1 | 5VK–13586–00 | JOINT, CARBURETOR 1 | 1 | 1 | 1 | 1 | | |
| 2 | 90450–72003 | HOSE CLAMP ASSY | 2 | 2 | 2 | 2 | | |
| 3 | 1S3–13545–00 | HOSE 1 | 1 | 1 | 1 | 1 | | |
| 4 | 90467–160A4 | CLIP | 1 | 1 | 1 | 1 | | |
| 5 | 90467–15012 | CLIP | 1 | 1 | 1 | 1 | | |
| 6 | 1S3–14411–00 | CASE, AIR CLEANER 1 | 1 | 1 | 1 | 1 | | |
| 7 | 1S3–14412–01 | CAP, CLEANER CASE 1 | 1 | 1 | 1 | 1 | | |
| 8 | 1S3–14453–00 | JOINT, AIR CLEANER 1 | 1 | 1 | 1 | 1 | | |
| 9 | 1S3–14451–00 | ELEMENT, AIR CLEANER | 1 | 1 | 1 | 1 | | |
| 10 | 1S3–14458–00 | GUIDE | 1 | 1 | 1 | 1 | | |
| 11 | 1S3–14459–01 | HOLDER, GUIDE | 1 | 1 | 1 | 1 | | |
| 12 | 90209–06014 | WASHER | 1 | 1 | 1 | 1 | | |
| 13 | 90122–06010 | BOLT, WING | 1 | 1 | 1 | 1 | | |
| 14 | 90267–48138 | RIVET, BLIND | 4 | 4 | 4 | 4 | | |
| 15 | 90201–04028 | WASHER, PLATE | 4 | 4 | 4 | 4 | | |
| 16 | 5GH–14436–00 | HOOK | 4 | 4 | 4 | 4 | | |
| 17 | 5VU–85886–00 | SENSOR, AIR TEMPRATURE | 1 | 1 | 1 | 1 | | |
| 18 | 5KM–14419–00 | PIPE | 1 | 1 | 1 | 1 | | |
| 19 | 31A–14435–00 | GROMMET | 1 | 1 | 1 | 1 | | |
| 20 | 31A–14419–00 | PIPE | 1 | 1 | 1 | 1 | | |
| 21 | 10M–14457–00 | SEAL | 1 | 1 | 1 | 1 | | |
| 22 | 1S3–14457–00 | SEAL | 1 | 1 | 1 | 1 | | |
| 23 | 59V–14457–00 | SEAL | 1 | 1 | 1 | 1 | | |
| 24 | 90467–220A1 | CLIP | 1 | 1 | 1 | 1 | | |
| 25 | 90460–75020 | CLAMP, HOSE | 1 | 1 | 1 | 1 | | |
| 26 | 90450–59006 | HOSE CLAMP ASSY | 1 | 1 | 1 | 1 | | |
| 27 | 90105–06084 | BOLT, FLANGE | 4 | 4 | 4 | 4 | | |

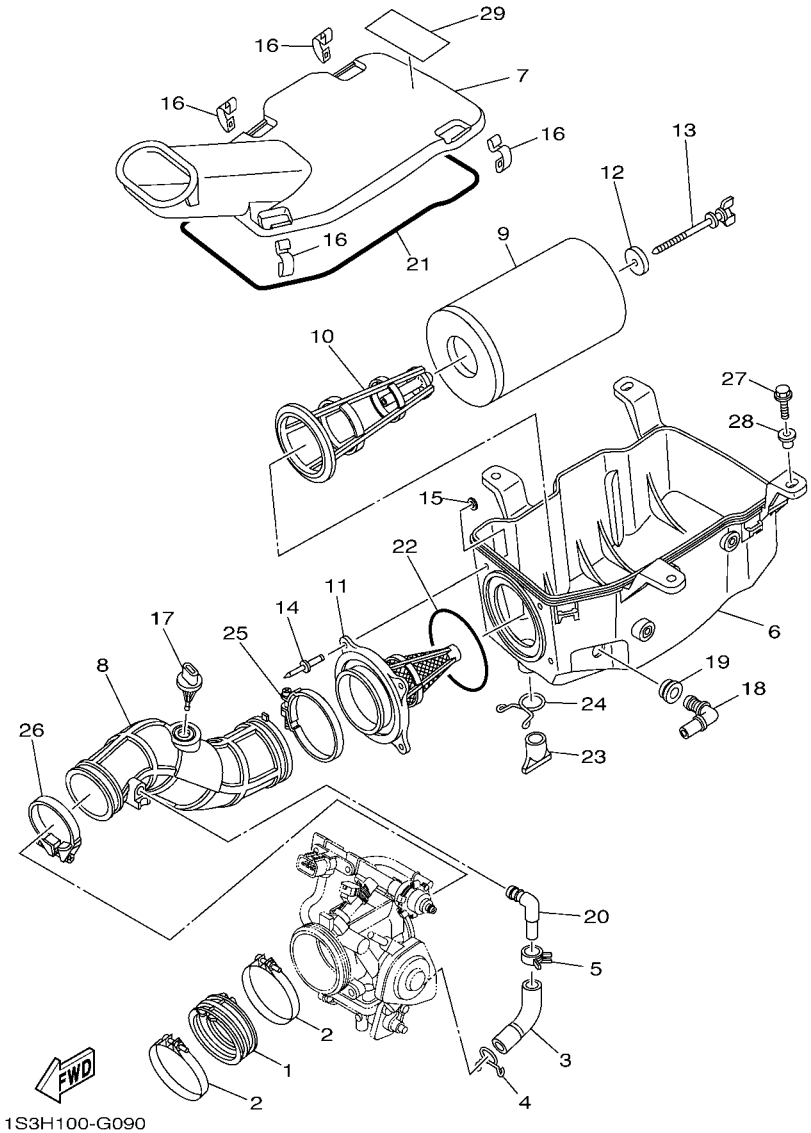


## FIG. 9 INTAKE

| REF. NO. | PART NO. | DESCRIPTION | USA | CAN | EUR | OCE | | REMARKS |
|---|---|---|---|---|---|---|---|---|
| 28 | 90387–08073 | COLLAR | 4 | 4 | 4 | 4 | | |
| 29 | 1S3–2177C–20 | PLATE, EPA OFFROAD ATV 1 | 1 | | | | | |

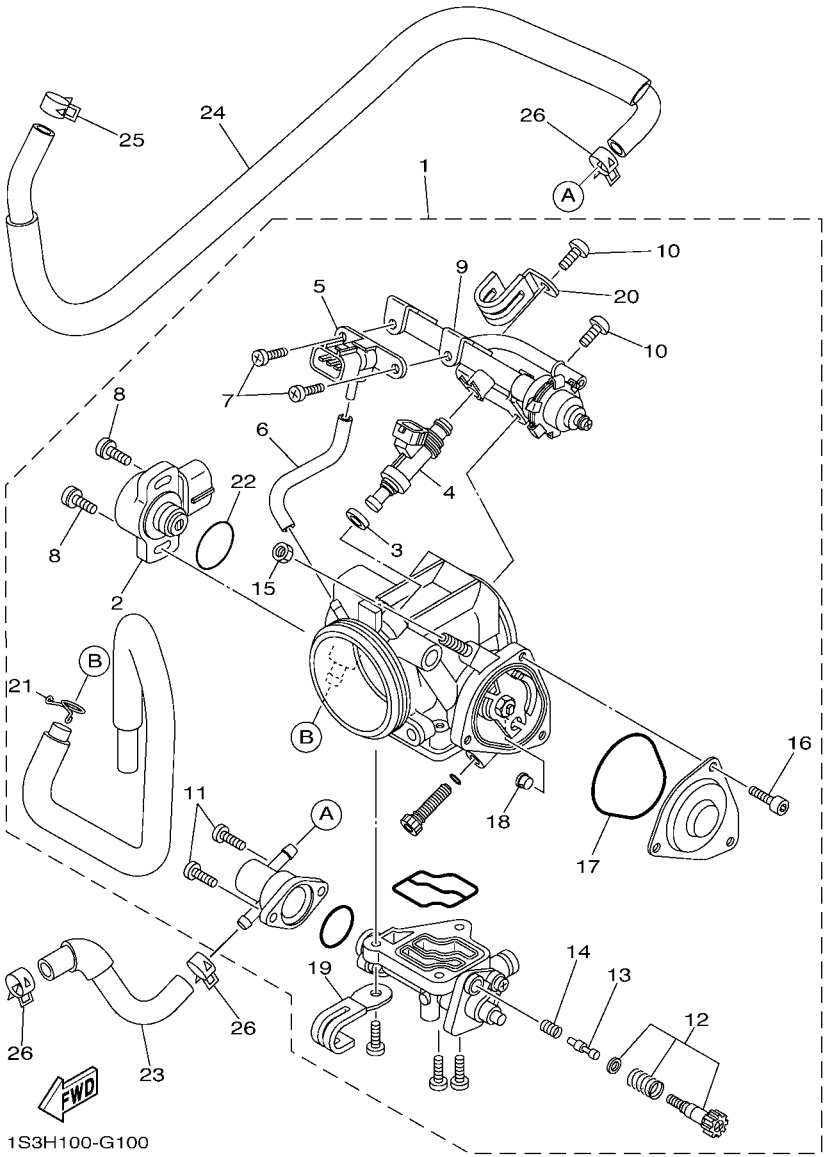


## FIG. 10 THROTTLE BODY ASSY 1

| REF. NO. | PART NO. | DESCRIPTION | USA | CAN | EUR | OCE | | REMARKS |
|---|---|---|---|---|---|---|---|---|
| 1 | 1S3–13750–10 | THROTTLE BODY ASSY | 1 | 1 | 1 | 1 | | |
| 2 | 8GL–85885–00 | .THROTTLE SENSOR ASSY | 1 | 1 | 1 | 1 | | |
| 3 | 8FP–13556–00 | .GASKET, MANIFOLD | 1 | 1 | 1 | 1 | | |
| 4 | 5VK–13761–00 | .INJECTOR | 1 | 1 | 1 | 1 | | |
| 5 | 1C7–82380–00 | .SENSOR, PRESSURE | 1 | 1 | 1 | 1 | | |
| 6 | 5JW–14348–00 | .PIPE 1 | 1 | 1 | 1 | 1 | | |
| 7 | 98507–06010 | .SCREW, PAN HEAD | 2 | 2 | 2 | 2 | | |
| 8 | 8CC–14216–10 | .SCREW | 2 | 2 | 2 | 2 | | |
| 9 | 1S3–13160–00 | .DELIVERY PIPE ASSY 1 | 1 | 1 | 1 | 1 | | |
| 10 | 98507–06012 | .SCREW, PAN HEAD | 2 | 2 | 2 | 2 | | |
| 11 | 98507–05012 | .SCREW, PAN HEAD | 2 | 2 | 2 | 2 | | |
| 12 | 5VX–14503–00 | .ADJUST SCREW SET | 1 | 1 | 1 | 1 | | |
| 13 | 1S3–13493–00 | .PLUNGER | 1 | 1 | 1 | 1 | | |
| 14 | 4BH–14134–00 | .SPRING, AIR ADJUSTING | 1 | 1 | 1 | 1 | | |
| 15 | 1S3–14161–00 | .NUT, CABLE ADJUSTING | 1 | 1 | 1 | 1 | | |
| 16 | 91312–04006 | .BOLT | 3 | 3 | 3 | 3 | | |
| 17 | 4WV–14147–10 | .O-RING | 1 | 1 | 1 | 1 | | |
| 18 | 1UY–14155–00 | .GUIDE, CABLE | 1 | 1 | 1 | 1 | | |
| 19 | 3JC–14146–00 | .PLATE | 1 | 1 | 1 | 1 | | |
| 20 | 5JW–14945–00 | .PLATE | 1 | 1 | 1 | 1 | | |
| 21 | 90467–09006 | .CLIP | 1 | 1 | 1 | 1 | | |
| 22 | 5YP–14562–00 | .O-RING | 1 | 1 | 1 | 1 | | |
| 23 | 1S3–1243A–00 | HOSE 1 | 1 | 1 | 1 | 1 | | |
| 24 | 1S3–1243E–00 | HOSE 2 | 1 | 1 | 1 | 1 | | |
| 25 | 90467–11090 | CLIP | 1 | 1 | 1 | 1 | | |
| 26 | 90467–11090 | CLIP | 3 | 3 | 3 | 3 | | |

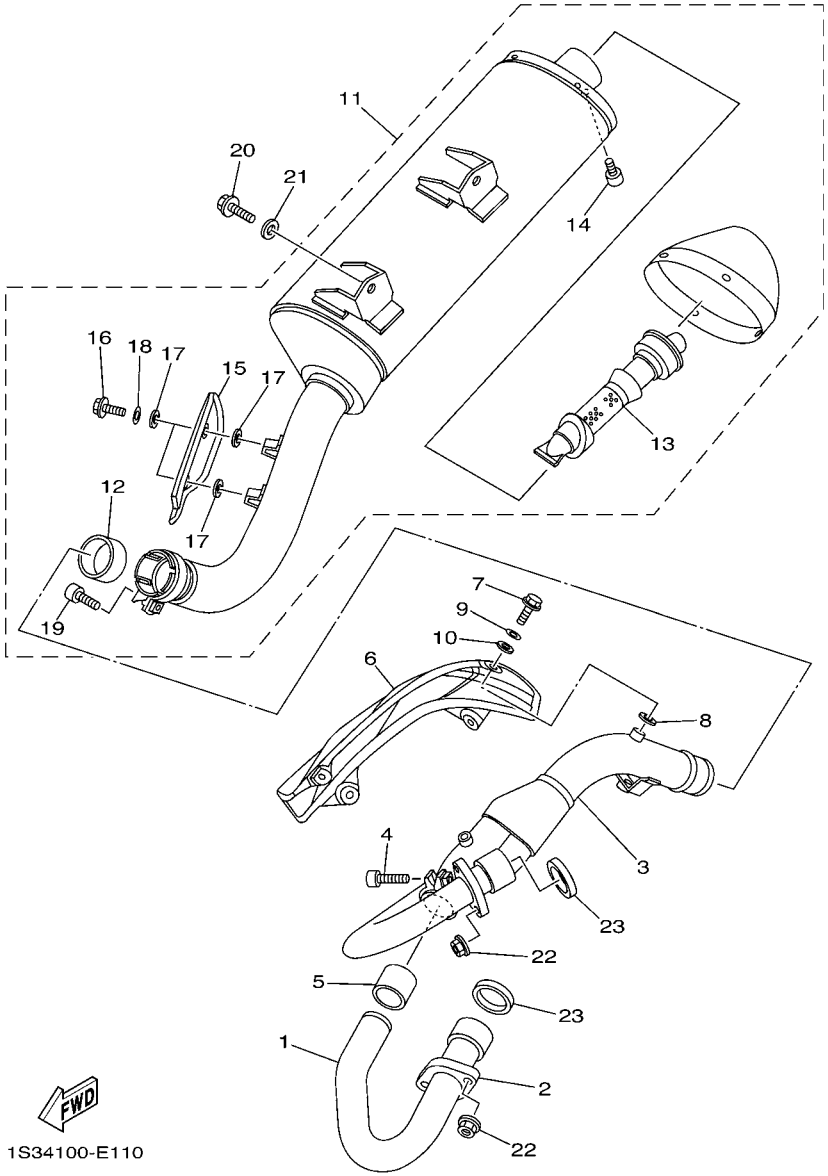


## FIG. 11 EXHAUST

| REF. NO. | PART NO. | DESCRIPTION | USA | CAN | EUR | OCE | | REMARKS |
|---|---|---|---|---|---|---|---|---|
| 1 | 1S3–14611–00 | PIPE, EXHAUST 1 | 1 | 1 | 1 | 1 | | |
| 2 | 1S3–14612–00 | NUT, RING | 1 | 1 | 1 | 1 | | |
| 3 | 1S3–14621–01 | PIPE, EXHAUST 2 | 1 | 1 | 1 | 1 | | |
| 4 | 91314–08035 | BOLT | 1 | 1 | 1 | 1 | | |
| 5 | 3YF–14714–00 | GASKET, MUFFLER | 1 | 1 | 1 | 1 | | |
| 6 | 1S3–14628–00 | PROTECTOR, EXHAUST PIPE | 1 | 1 | 1 | 1 | | |
| 7 | 95022–06012 | BOLT, FLANGE | 4 | 4 | 4 | 4 | | |
| 8 | 90201–05015 | WASHER, PLATE | 4 | 4 | 4 | 4 | | |
| 9 | 90201–06035 | WASHER, PLATE | 4 | 4 | 4 | 4 | | |
| 10 | 90201–05019 | WASHER, PLATE | 4 | 4 | 4 | 4 | | |
| 11 | 1S3–14710–10 | MUFFLER ASSY 1 | 1 | 1 | 1 | 1 | | |
| 12 | 5LP–14714–00 | .GASKET, MUFFLER | 1 | 1 | 1 | 1 | | |
| 13 | 1S3–14752–00 | .PIPE, OUTLET | 1 | 1 | 1 | 1 | | |
| 14 | 91312–06010 | .BOLT | 1 | 1 | 1 | 1 | | |
| 15 | 1S3–14728–00 | .PROTECTOR, MUFFLER 2 | 1 | 1 | 1 | 1 | | |
| 16 | 98902–06010 | .SCREW, BIND | 2 | 2 | 2 | 2 | | |
| 17 | 90201–05015 | .WASHER, PLATE | 4 | 4 | 4 | 4 | | |
| 18 | 92902–06200 | .WASHER | 2 | 2 | 2 | 2 | | |
| 19 | 91314–08035 | .BOLT | 1 | 1 | 1 | 1 | | |
| 20 | 90105–08142 | BOLT, FLANGE | 2 | 2 | 2 | 2 | | |
| 21 | 90201–08048 | WASHER, PLATE | 2 | 2 | 2 | 2 | | |
| 22 | 95702–08500 | NUT, WITH WASHER | 4 | 4 | 4 | 4 | | |
| 23 | 3YF–14613–01 | GASKET, EXHAUST PIPE | 2 | 2 | 2 | 2 | | |

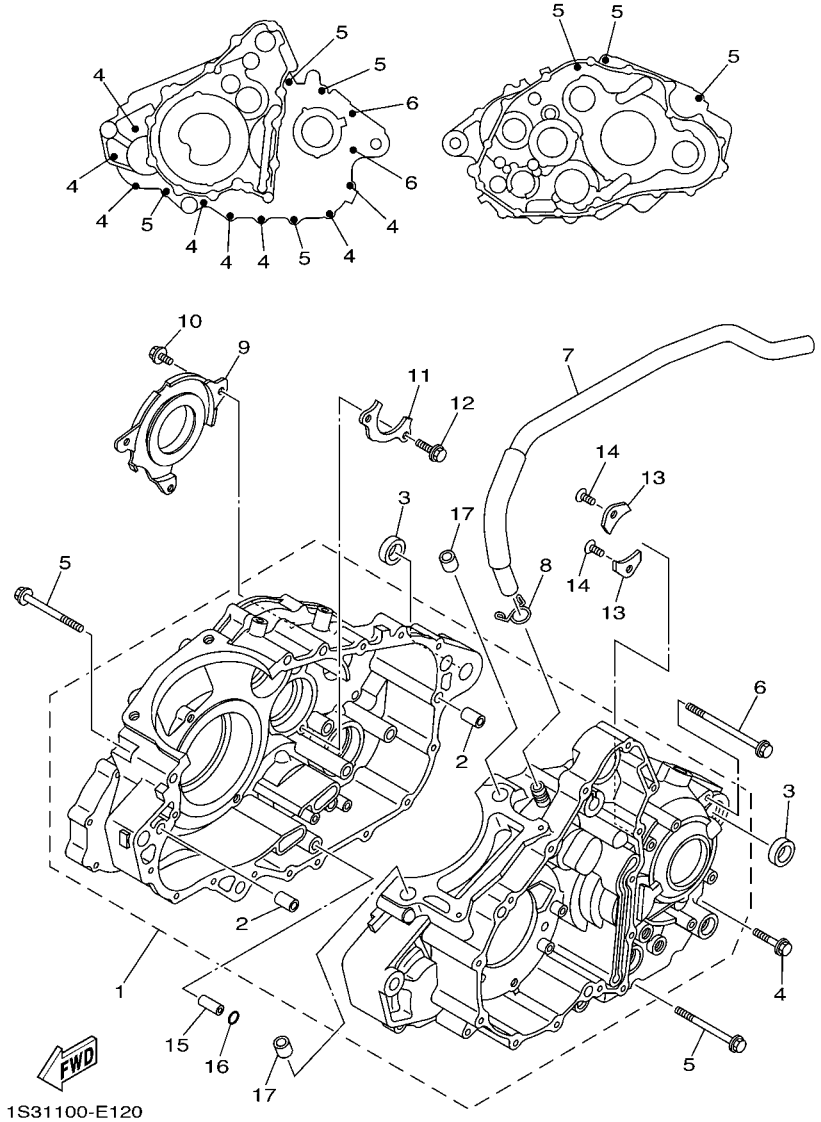


## FIG. 12 CRANKCASE

| REF. NO. | PART NO. | DESCRIPTION | USA | CAN | EUR | OCE | | REMARKS |
|---|---|---|---|---|---|---|---|---|
| 1 | 1S3–15100–01 | CRANKCASE ASSY | 1 | 1 | 1 | 1 | | |
| 2 | 99530–10114 | .PIN, DOWEL | 2 | 2 | 2 | 2 | | |
| 3 | 90387–17009 | COLLAR | 2 | 2 | 2 | 2 | | |
| 4 | 95022–06030 | BOLT, FLANGE | 8 | 8 | 8 | 8 | | |
| 5 | 95022–06070 | BOLT, FLANGE | 7 | 7 | 7 | 7 | | |
| 6 | 95022–06090 | BOLT, FLANGE | 2 | 2 | 2 | 2 | | |
| 7 | 1S3–11166–00 | PIPE, BREATHER 1 | 1 | 1 | 1 | 1 | | |
| 8 | 90467–140A4 | CLIP | 1 | 1 | 1 | 1 | | |
| 9 | 1S3–11165–00 | PLATE, BREATHER | 1 | 1 | 1 | 1 | | |
| 10 | 90105–06081 | BOLT, FLANGE | 3 | 3 | 3 | 3 | | |
| 11 | 1S3–15383–00 | PLATE, BEARING COVER | 1 | 1 | 1 | 1 | | |
| 12 | 90105–06082 | BOLT, FLANGE | 2 | 2 | 2 | 2 | | |
| 13 | 4JT–15381–01 | PLATE, BEARING COVER | 2 | 2 | 2 | 2 | | |
| 14 | 90149–06074 | SCREW | 2 | 2 | 2 | 2 | | |
| 15 | 99530–08016 | PIN, DOWEL | 1 | 1 | 1 | 1 | | |
| 16 | 93210–07135 | O-RING | 1 | 1 | 1 | 1 | | |
| 17 | 99530–14016 | PIN, DOWEL | 2 | 2 | 2 | 2 | | |

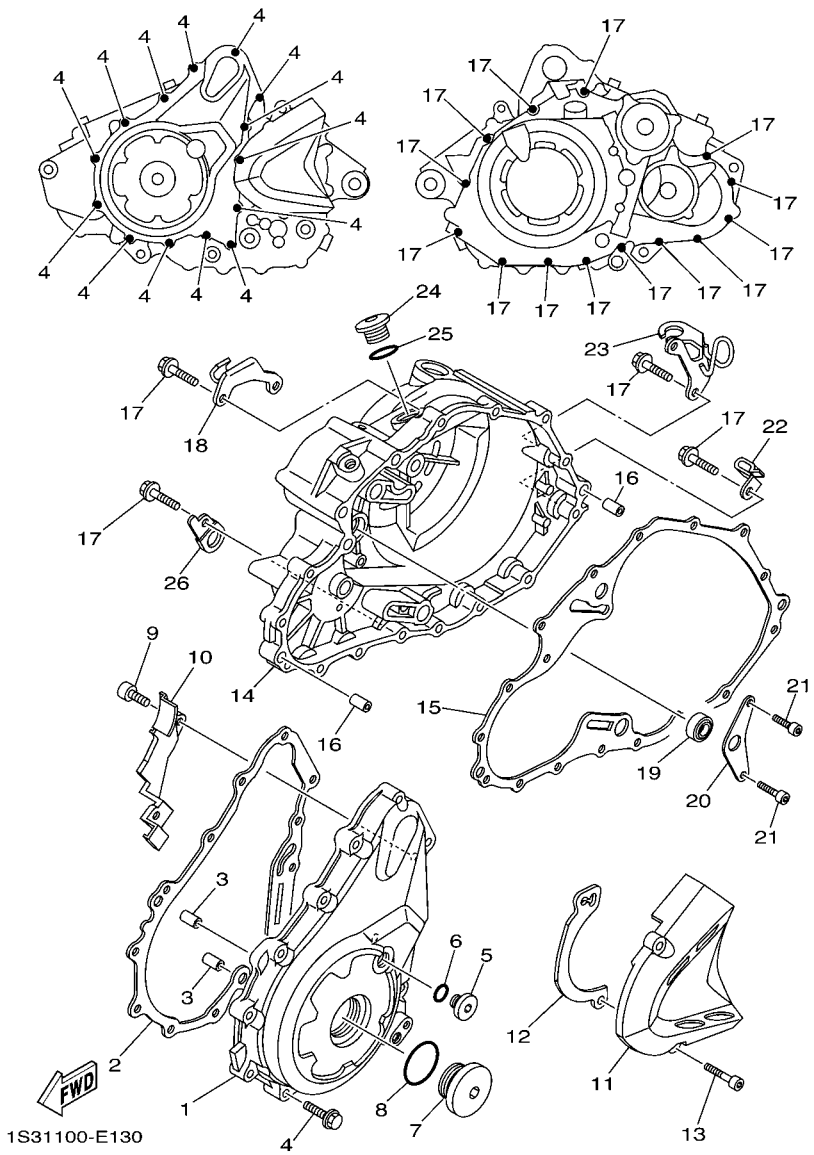


## FIG. 13 CRANKCASE COVER 1

| REF. NO. | PART NO. | DESCRIPTION | USA | CAN | EUR | OCE | | REMARKS |
|---|---|---|---|---|---|---|---|---|
| 1 | 1S3–15411–00 | COVER, CRANKCASE 1 | 1 | 1 | 1 | 1 | | |
| 2 | 1S3–15451–00 | GASKET, CRANKCASE COVER 1 | 1 | 1 | 1 | 1 | | |
| 3 | 99530–10114 | PIN, DOWEL | 2 | 2 | 2 | 2 | | |
| 4 | 95022–06030 | BOLT, FLANGE | 14 | 14 | 14 | 14 | | |
| 5 | 90340–14003 | PLUG, STRAIGHT SCREW | 1 | 1 | 1 | 1 | | |
| 6 | 93210–14369 | O-RING | 1 | 1 | 1 | 1 | | |
| 7 | 90340–36001 | PLUG, STRAIGHT SCREW | 1 | 1 | 1 | 1 | | |
| 8 | 93210–357A3 | O-RING | 1 | 1 | 1 | 1 | | |
| 9 | 90110–05031 | BOLT, HEXAGON SOCKET HEAD | 1 | 1 | 1 | 1 | | |
| 10 | 1S3–15113–00 | PLATE | 1 | 1 | 1 | 1 | | |
| 11 | 1S3–15421–00 | COVER, CRANKCASE 2 | 1 | 1 | 1 | 1 | | |
| 12 | 1S3–17466–00 | GUIDE, CHAIN | 1 | 1 | 1 | 1 | | |
| 13 | 91312–06025 | BOLT | 2 | 2 | 2 | 2 | | |
| 14 | 1S3–15431–00 | COVER, CRANKCASE 3 | 1 | 1 | 1 | 1 | | |
| 15 | 1S3–15462–00 | GASKET, CRANKCASE COVER 3 | 1 | 1 | 1 | 1 | | |
| 16 | 99530–10120 | PIN, DOWEL | 2 | 2 | 2 | 2 | | |
| 17 | 95022–06030 | BOLT, FLANGE | 14 | 14 | 14 | 14 | | |
| 18 | 1S3–15441–00 | HOLDER, CLUTCH CABLE | 1 | 1 | 1 | 1 | | |
| 19 | 93101–14164 | OIL SEAL | 1 | 1 | 1 | 1 | | |
| 20 | 1S3–15118–00 | HOLDER | 1 | 1 | 1 | 1 | | |
| 21 | 90110–06182 | BOLT, HEXAGON SOCKET HEAD | 2 | 2 | 2 | 2 | | |
| 22 | 90461–10011 | CLAMP | 1 | 1 | 1 | 1 | | |
| 23 | 1S3–1546C–00 | HOLDER | 1 | 1 | 1 | 1 | | |
| 24 | 1S3–15189–00 | PLUG | 1 | 1 | 1 | 1 | | |
| 25 | 93210–207A0 | O-RING | 1 | 1 | 1 | 1 | | |
| 26 | 90462–08046 | CLAMP | 1 | 1 | 1 | 1 | | |

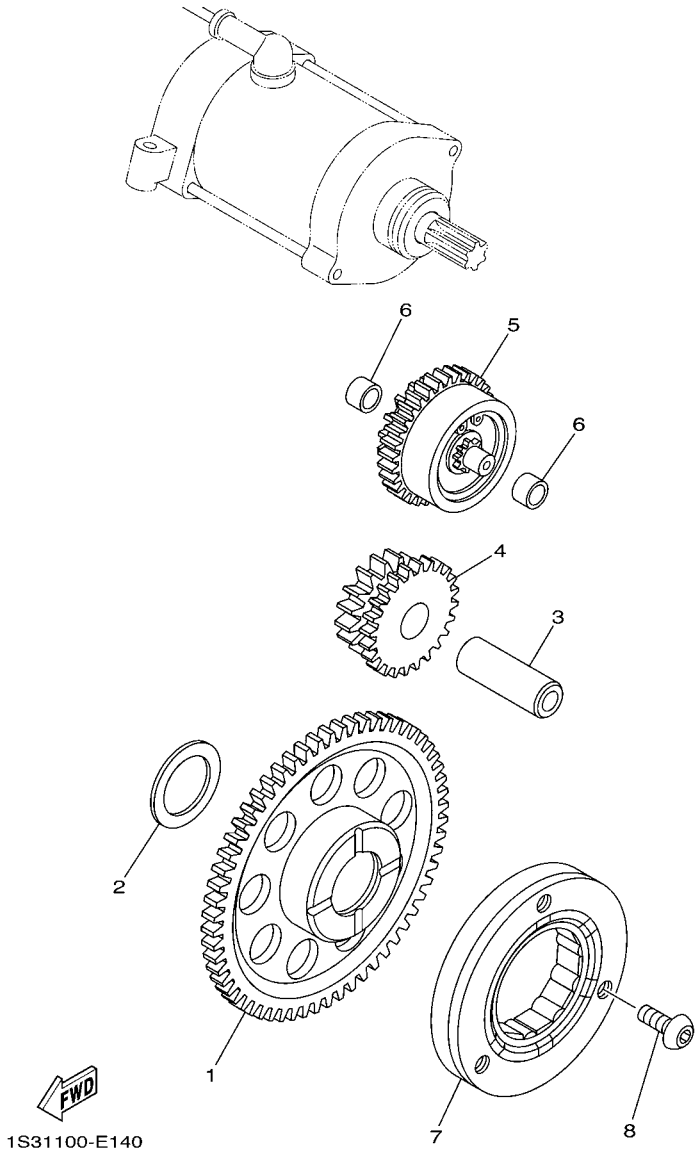


## FIG. 14 STARTER

| REF. NO. | PART NO. | DESCRIPTION | USA | CAN | EUR | OCE | | REMARKS |
|---|---|---|---|---|---|---|---|---|
| 1 | 1S3–15515–00 | GEAR 3 | 1 | 1 | 1 | 1 | | |
| 2 | 90201–286K9 | WASHER, PLATE (T1.0) | 1 | 1 | 1 | 1 | | |
| 3 | 1VJ–15522–00 | SHAFT 2 | 1 | 1 | 1 | 1 | | |
| 4 | 1S3–15517–00 | GEAR, IDLER 2 | 1 | 1 | 1 | 1 | | |
| 5 | 1S3–15560–00 | DAMPER ASSY | 1 | 1 | 1 | 1 | | |
| 6 | 90380–10002 | BUSH, SOLID | 2 | 2 | 2 | 2 | | |
| 7 | 5VK–15590–00 | STARTER ONE-WAY ASSY | 1 | 1 | 1 | 1 | | |
| 8 | 90149–08018 | SCREW | 3 | 3 | 3 | 3 | | |

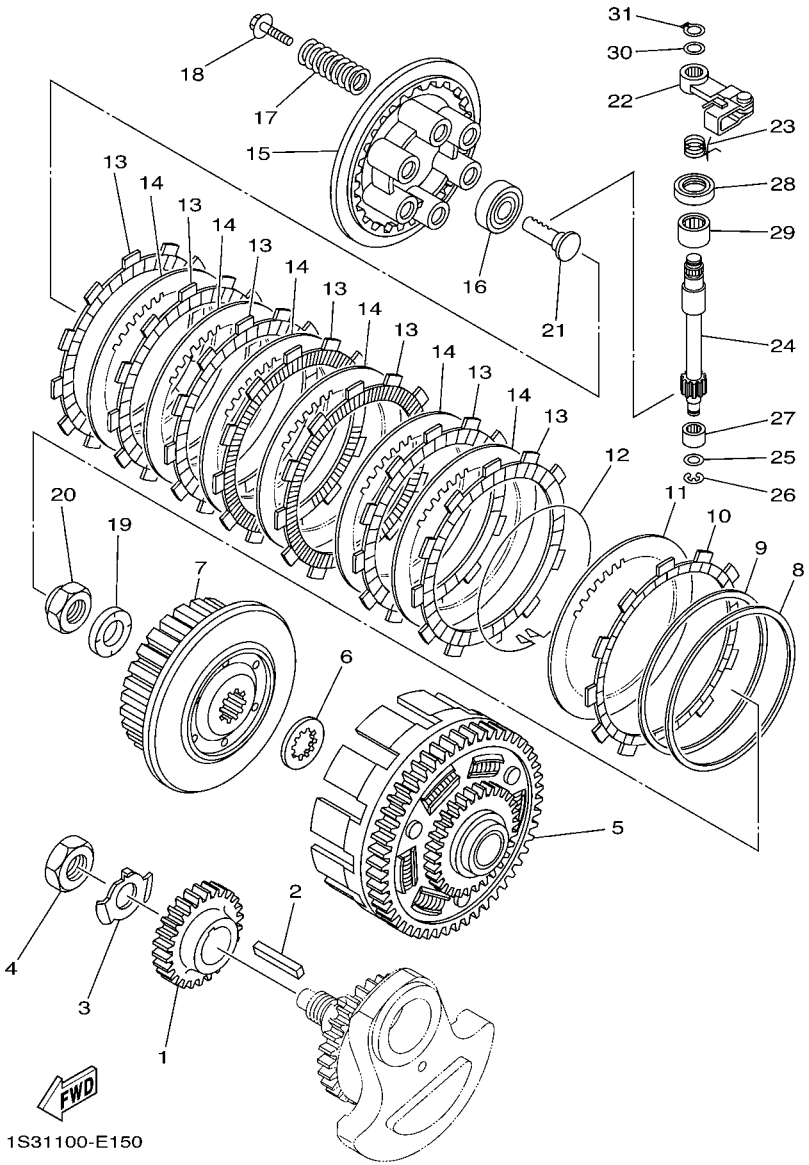


## FIG. 15 CLUTCH

| REF. NO. | PART NO. | DESCRIPTION | USA | CAN | EUR | OCE | | REMARKS |
|---|---|---|---|---|---|---|---|---|
| 1 | 1S3–16111–00 | GEAR, PRIMARY DRIVE | 1 | 1 | 1 | 1 | | |
| 2 | 90282–07003 | KEY, STRAIGHT | 1 | 1 | 1 | 1 | | |
| 3 | 90215–20006 | WASHER, LOCK | 1 | 1 | 1 | 1 | | |
| 4 | 90170–20274 | NUT | 1 | 1 | 1 | 1 | | |
| 5 | 1S3–16150–00 | PRIMARY DRIVEN GEAR COMP. | 1 | 1 | 1 | 1 | | |
| 6 | 2JN–16154–00 | PLATE, THRUST 1 | 1 | 1 | 1 | 1 | | |
| 7 | 1S3–16371–00 | BOSS, CLUTCH | 1 | 1 | 1 | 1 | | |
| 8 | 5JG–16384–00 | PLATE, SEAT | 1 | 1 | 1 | 1 | | |
| 9 | 5JG–16383–00 | SPRING, CLUTCH BOSS | 1 | 1 | 1 | 1 | | |
| 10 | 5TG–16331–00 | PLATE, FRICTION 2 | 1 | 1 | 1 | 1 | | |
| 11 | 4X7–16325–00 | PLATE, CLUTCH 2 | 1 | 1 | 1 | 1 | | |
| 12 | 4X7–16385–00 | RING, CLUTCH BOSS | 1 | 1 | 1 | 1 | | |
| 13 | 5TA–16321–00 | PLATE, FRICTION | 7 | 7 | 7 | 7 | | |
| 14 | 4X7–16325–00 | PLATE, CLUTCH 2 | 6 | 6 | 6 | 6 | | |
| 15 | 1S3–16351–00 | PLATE, PRESSURE 1 | 1 | 1 | 1 | 1 | | |
| 16 | 93306–00304 | BEARING | 1 | 1 | 1 | 1 | | |
| 17 | 90501–230E4 | SPRING, COMPRESSION | 6 | 6 | 6 | 6 | | |
| 18 | 90159–06029 | SCREW, WITH WASHER | 6 | 6 | 6 | 6 | | |
| 19 | 90208–20001 | WASHER, CONICAL SPRING | 1 | 1 | 1 | 1 | | |
| 20 | 90179–20007 | NUT | 1 | 1 | 1 | 1 | | |
| 21 | 4XV–16356–01 | ROD, PUSH 1 | 1 | 1 | 1 | 1 | | |
| 22 | 3LD–16340–01 | PUSH LEVER ASSY | 1 | 1 | 1 | 1 | | |
| 23 | 90508–18018 | SPRING, TORSION | 1 | 1 | 1 | 1 | | |
| 24 | 5EB–16382–00 | AXLE, PUSH LEVER | 1 | 1 | 1 | 1 | | |
| 25 | 92902–08600 | WASHER, PLATE | 1 | 1 | 1 | 1 | | |
| 26 | 99001–07600 | CIRCLIP | 1 | 1 | 1 | 1 | | |
| 27 | 93317–11020 | BEARING | 1 | 1 | 1 | 1 | | |

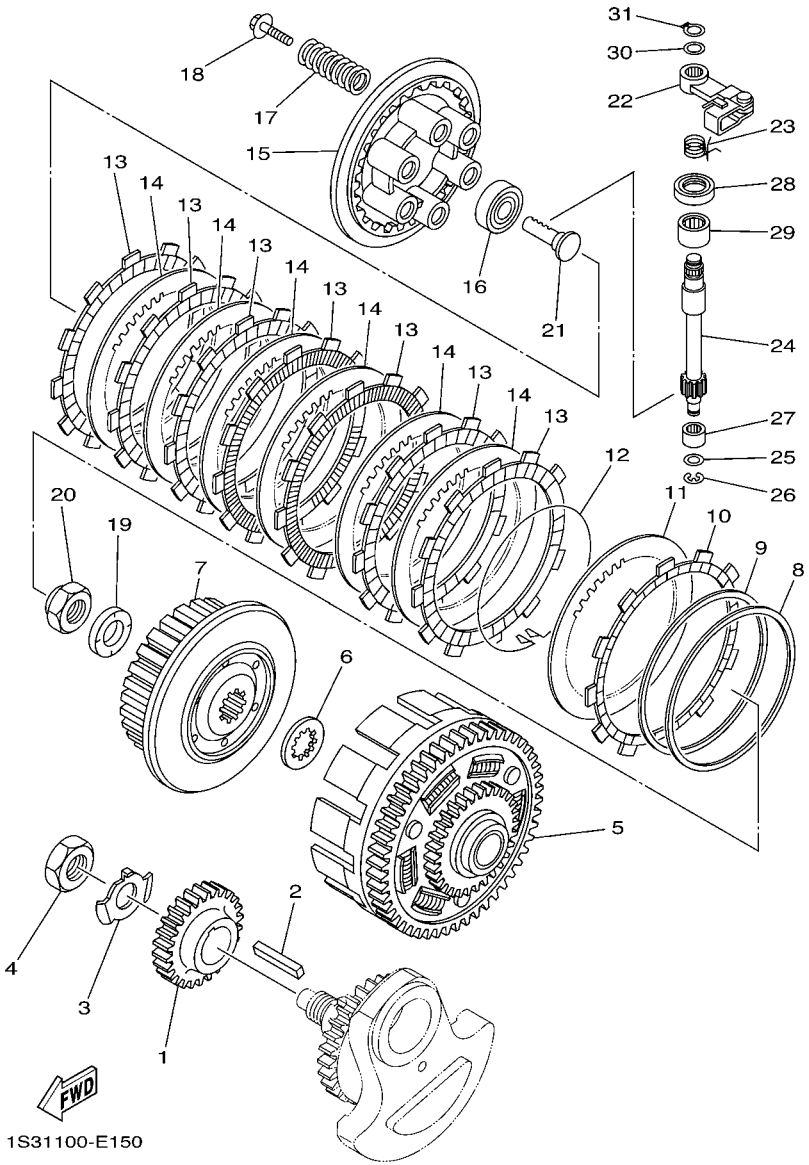


## FIG. 15 CLUTCH

| REF. NO. | PART NO. | DESCRIPTION | USA | CAN | EUR | OCE | | REMARKS |
|---|---|---|---|---|---|---|---|---|
| 28 | 93102–15212 | OIL SEAL | 1 | 1 | 1 | 1 | | |
| 29 | 93315–31502 | BEARING | 1 | 1 | 1 | 1 | | |
| 30 | 90201–10614 | WASHER, PLATE | 1 | 1 | 1 | 1 | | |
| 31 | 99009–10400 | CIRCLIP | 1 | 1 | 1 | 1 | | |

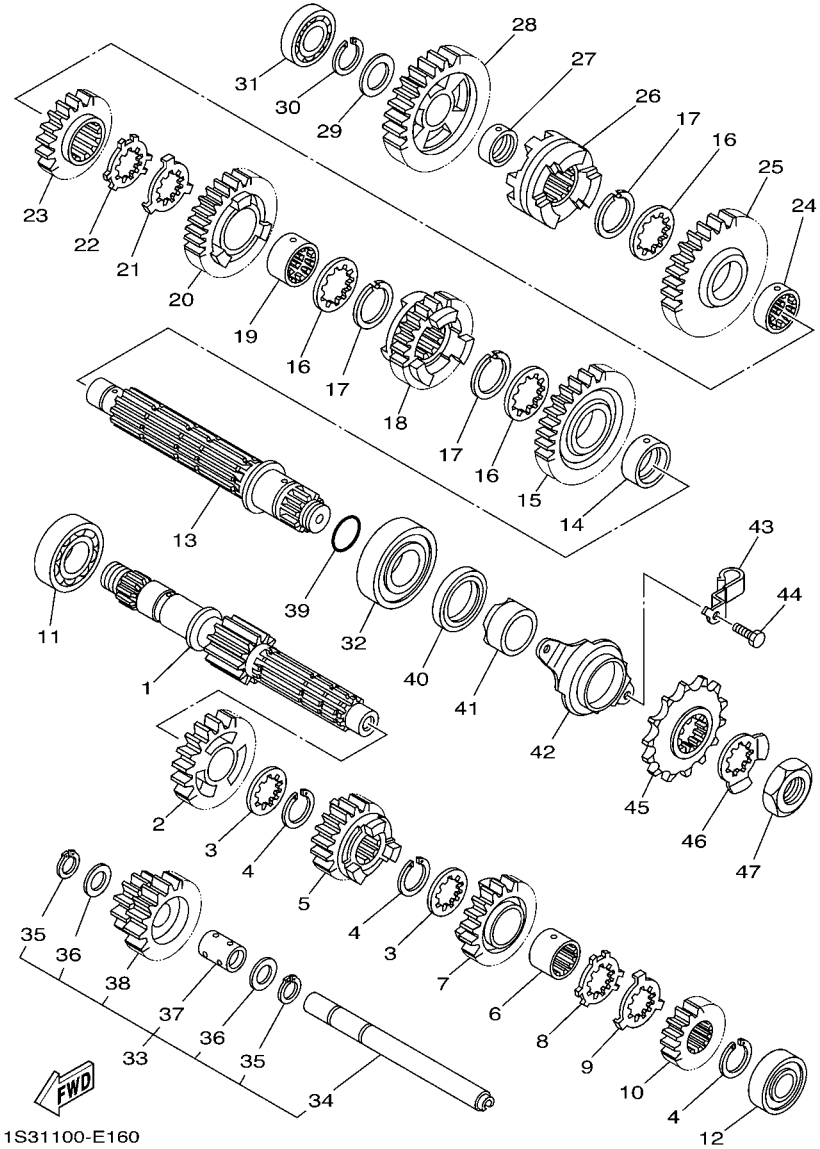


## FIG. 16 TRANSMISSION

| REF. NO. | PART NO. | DESCRIPTION | USA | CAN | EUR | OCE | | REMARKS |
|---|---|---|---|---|---|---|---|---|
| 1 | 1S3–17401–00 | MAIN AXLE ASSY | 1 | 1 | 1 | 1 | | |
| 2 | 1S3–17151–00 | GEAR, 5TH PINION (24T) | 1 | 1 | 1 | 1 | | |
| 3 | 90209–22008 | WASHER | 2 | 2 | 2 | 2 | | |
| 4 | 93440–25084 | CIRCLIP | 3 | 3 | 3 | 3 | | |
| 5 | 1S3–17131–00 | GEAR, 3RD PNION (17T) | 1 | 1 | 1 | 1 | | |
| 6 | 90387–22006 | COLLAR | 1 | 1 | 1 | 1 | | |
| 7 | 1S3–17141–00 | GEAR, 4TH PINION (22T) | 1 | 1 | 1 | 1 | | |
| 8 | 90214–22003 | WASHER, CLAW | 1 | 1 | 1 | 1 | | |
| 9 | 90214–22002 | WASHER, CLAW | 1 | 1 | 1 | 1 | | |
| 10 | 1S3–17121–00 | GEAR, 2ND PINION (18T) | 1 | 1 | 1 | 1 | | |
| 11 | 93306–20501 | BEARING | 1 | 1 | 1 | 1 | | |
| 12 | 93306–00431 | BEARING | 1 | 1 | 1 | 1 | | |
| 13 | 1S3–17402–00 | DRIVE AXLE ASSY | 1 | 1 | 1 | 1 | | |
| 14 | 90387–28008 | COLLAR | 1 | 1 | 1 | 1 | | |
| 15 | 1S3–17221–00 | GEAR, 2ND WHEEL (28T) | 1 | 1 | 1 | 1 | | |
| 16 | 90209–26008 | WASHER | 3 | 3 | 3 | 3 | | |
| 17 | 93440–28062 | CIRCLIP | 3 | 3 | 3 | 3 | | |
| 18 | 1S3–17241–00 | GEAR, 4TH WHEEL (25T) | 1 | 1 | 1 | 1 | | |
| 19 | 90387–26005 | COLLAR | 1 | 1 | 1 | 1 | | |
| 20 | 1S3–17231–00 | GEAR, 3RD WHEEL (25T) | 1 | 1 | 1 | 1 | | |
| 21 | 90214–26002 | WASHER, CLAW | 1 | 1 | 1 | 1 | | |
| 22 | 90214–26003 | WASHER, CLAW | 1 | 1 | 1 | 1 | | |
| 23 | 1S3–17251–00 | GEAR, 5TH WHEEL (22T) | 1 | 1 | 1 | 1 | | |
| 24 | 90387–26004 | COLLAR | 1 | 1 | 1 | 1 | | |
| 25 | 1S3–17211–00 | GEAR, 1ST WHEEL (38T) | 1 | 1 | 1 | 1 | | |
| 26 | 1S3–17285–00 | CLUTCH, DOG | 1 | 1 | 1 | 1 | | |
| 27 | 90387–20021 | COLLAR | 1 | 1 | 1 | 1 | | |

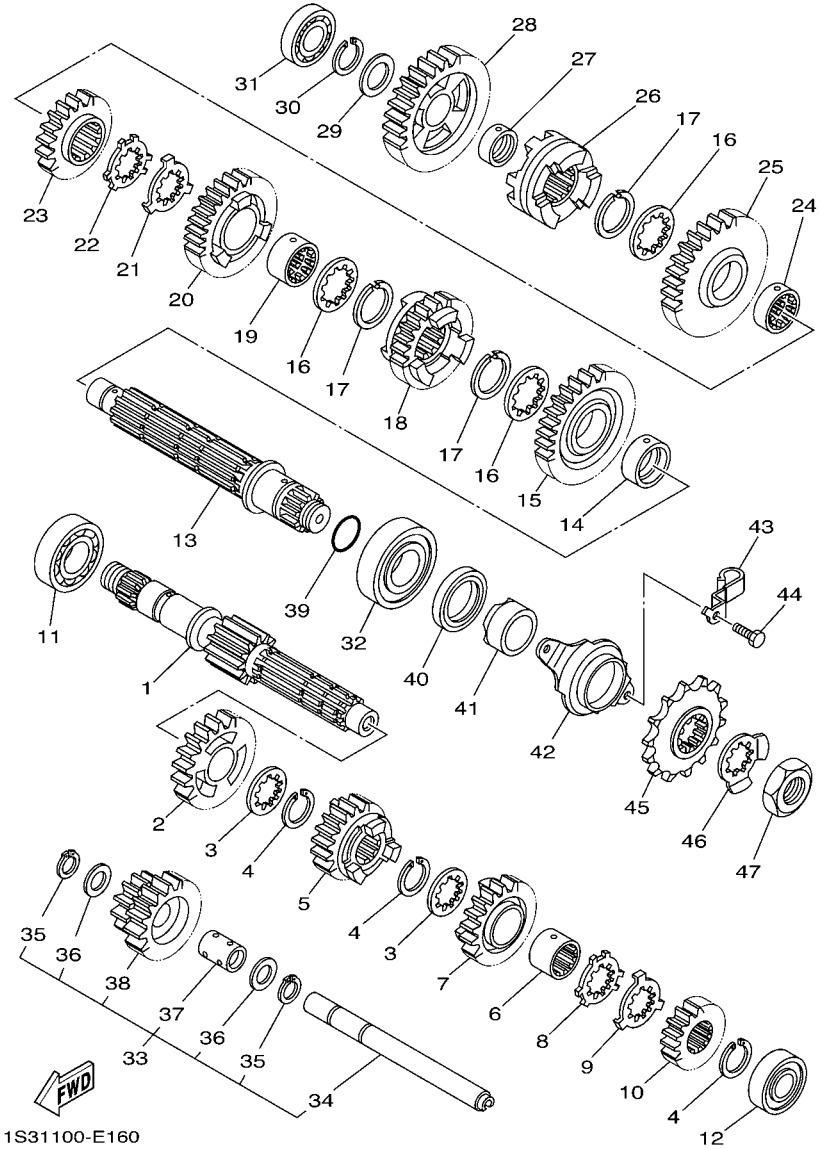


## FIG. 16 TRANSMISSION

| REF. NO. | PART NO. | DESCRIPTION | USA | CAN | EUR | OCE | | REMARKS |
|---|---|---|---|---|---|---|---|---|
| 28 | 1S3–17253–00 | GEAR, REVERSE WHEEL 2 (29T) | 1 | 1 | 1 | 1 | | |
| 29 | 90201–20276 | WASHER, PLATE (T=1.0) | 1 | 1 | 1 | 1 | | |
| 30 | 99009–20400 | CIRCLIP | 1 | 1 | 1 | 1 | | |
| 31 | 93306–00415 | BEARING | 1 | 1 | 1 | 1 | | |
| 32 | 93306–27803 | BEARING | 1 | 1 | 1 | 1 | | |
| 33 | 1S3–17430–00 | COUNTER AXLE ASSY | 1 | 1 | 1 | 1 | | |
| 34 | 1S3–17432–00 | .AXLE, IDLE | 1 | 1 | 1 | 1 | | |
| 35 | 93440–15012 | .CIRCLIP | 2 | 2 | 2 | 2 | | |
| 36 | 90201–152P4 | .WASHER, PLATE | 2 | 2 | 2 | 2 | | |
| 37 | 90387–1504G | .COLLAR | 1 | 1 | 1 | 1 | | |
| 38 | 1S3–17243–00 | .GEAR, REVERSE WHEEL1(12T/24T) | 1 | 1 | 1 | 1 | | |
| 39 | 93210–25001 | O-RING | 1 | 1 | 1 | 1 | | |
| 40 | 93102–35393 | OIL SEAL | 1 | 1 | 1 | 1 | | |
| 41 | 90387–28009 | COLLAR | 1 | 1 | 1 | 1 | | |
| 42 | 1S3–17471–00 | PLATE, COVER | 1 | 1 | 1 | 1 | | |
| 43 | 90461–10011 | CLAMP | 1 | 1 | 1 | 1 | | |
| 44 | 97022–06014 | BOLT | 2 | 2 | 2 | 2 | | |
| 45 | 9383G–14231 | SPROCKET, DRIVE (14T) | 1 | 1 | 1 | 1 | | |
| 46 | 90215–25003 | WASHER, LOCK | 1 | 1 | 1 | 1 | | |
| 47 | 90179–22011 | NUT | 1 | 1 | 1 | 1 | | |

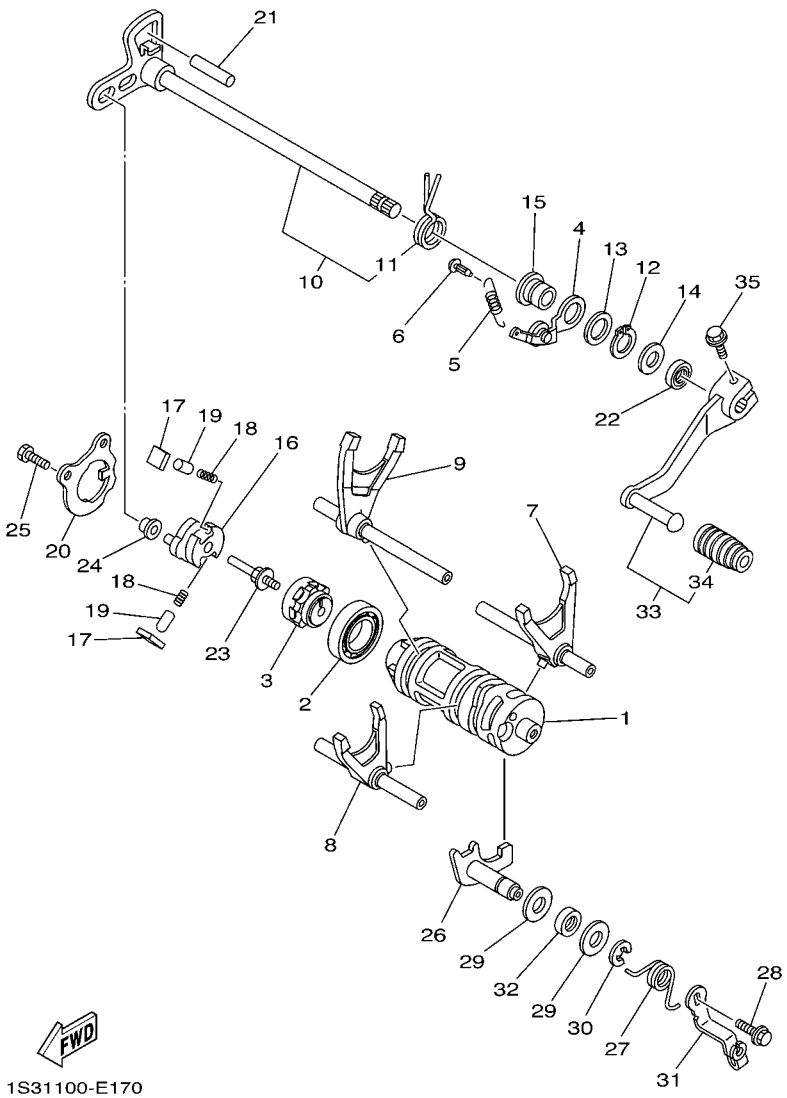


## FIG. 17 SHIFT CAM & FORK

| REF. NO. | PART NO. | DESCRIPTION | USA | CAN | EUR | OCE | | REMARKS |
|---|---|---|---|---|---|---|---|---|
| 1 | 1S3–18541–00 | CAM, SHIFT | 1 | 1 | 1 | 1 | | |
| 2 | 93306–90509 | BEARING | 1 | 1 | 1 | 1 | | |
| 3 | 4EW–18185–00 | SEGMENT | 1 | 1 | 1 | 1 | | |
| 4 | 1S3–18140–00 | STOPPER LEVER ASSY | 1 | 1 | 1 | 1 | | |
| 5 | 5JW–18144–00 | HANGER, SPRING | 1 | 1 | 1 | 1 | | |
| 6 | 132–16346–00 | HOOK, SPRING | 1 | 1 | 1 | 1 | | |
| 7 | 1S3–18501–00 | FORK, SHIFT 1 | 1 | 1 | 1 | 1 | | |
| 8 | 1S3–18502–00 | FORK, SHIFT 2 | 1 | 1 | 1 | 1 | | |
| 9 | 1S3–18503–00 | FORK, SHIFT 3 | 1 | 1 | 1 | 1 | | |
| 10 | 1S3–18101–00 | SHIFT SHAFT ASSY | 1 | 1 | 1 | 1 | | |
| 11 | 90508–35007 | .SPRING, TORSION | 1 | 1 | 1 | 1 | | |
| 12 | 99009–17400 | CIRCLIP | 1 | 1 | 1 | 1 | | |
| 13 | 90201–177G4 | WASHER, PLATE | 1 | 1 | 1 | 1 | | |
| 14 | 90201–12040 | WASHER, PLATE | 1 | 1 | 1 | 1 | | |
| 15 | 5VK–18699–00 | BOSS 1 | 1 | 1 | 1 | 1 | | |
| 16 | 1S3–18122–00 | LEVER, SHIFT 2 | 1 | 1 | 1 | 1 | | |
| 17 | 3XJ–18182–00 | PAWL, SHIFTER | 2 | 2 | 2 | 2 | | |
| 18 | 90501–052G5 | SPRING, COMPRESSION | 2 | 2 | 2 | 2 | | |
| 19 | 3XJ–18184–00 | PIN, PAWL | 2 | 2 | 2 | 2 | | |
| 20 | 1S3–18172–00 | GUIDE, SHIFT | 1 | 1 | 1 | 1 | | |
| 21 | 93608–30002 | PIN, DOWEL | 1 | 1 | 1 | 1 | | |
| 22 | 93102–12224 | OIL SEAL | 1 | 1 | 1 | 1 | | |
| 23 | 3XJ–18173–10 | PIN, SHIFT | 1 | 1 | 1 | 1 | | |
| 24 | 3XJ–18178–00 | ROLLER, SHIFT LEVER | 1 | 1 | 1 | 1 | | |
| 25 | 90101–06664 | BOLT | 2 | 2 | 2 | 2 | | |
| 26 | 1S3–18380–00 | SHIFTER BRKT. ASSY | 1 | 1 | 1 | 1 | | |
| 27 | 5LP–18337–01 | SPRING | 1 | 1 | 1 | 1 | | |

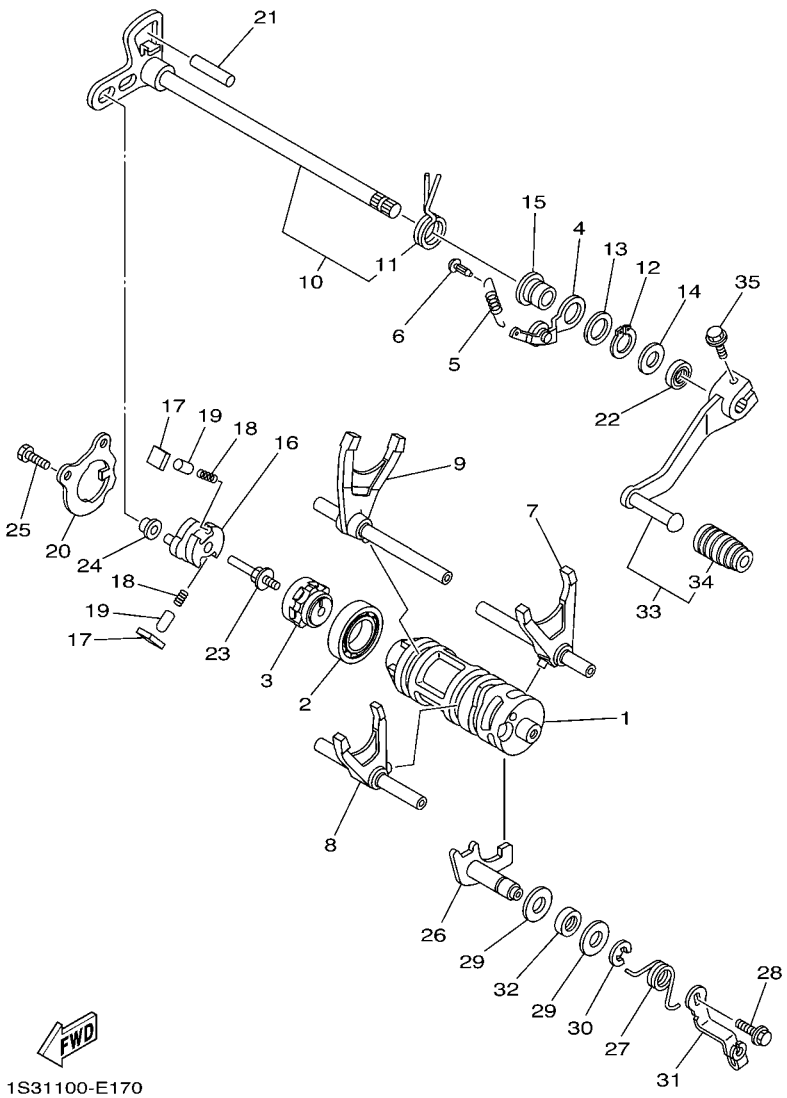


## FIG. 17 SHIFT CAM & FORK

| REF. NO. | PART NO. | DESCRIPTION | USA | CAN | EUR | OCE | | REMARKS |
|---|---|---|---|---|---|---|---|---|
| 28 | 95812–06012 | BOLT, FLANGE | 1 | 1 | 1 | 1 | | |
| 29 | 90201–12575 | WASHER, PLATE | 2 | 2 | 2 | 2 | | |
| 30 | 99001–10600 | CIRCLIP | 1 | 1 | 1 | 1 | | |
| 31 | 5LP–18431–00 | BRACKET, SHIFTER | 1 | 1 | 1 | 1 | | |
| 32 | 93102–12106 | OIL SEAL (SD 12-22-5 HS) | 1 | 1 | 1 | 1 | | |
| 33 | 1S3–18110–10 | SHIFT PEDAL ASSY | 1 | 1 | 1 | 1 | | |
| 34 | 5YT–18113–00 | .COVER, SHIFT PEDAL | 1 | 1 | 1 | 1 | | |
| 35 | 90105–06142 | BOLT, FLANGE | 1 | 1 | 1 | 1 | | |

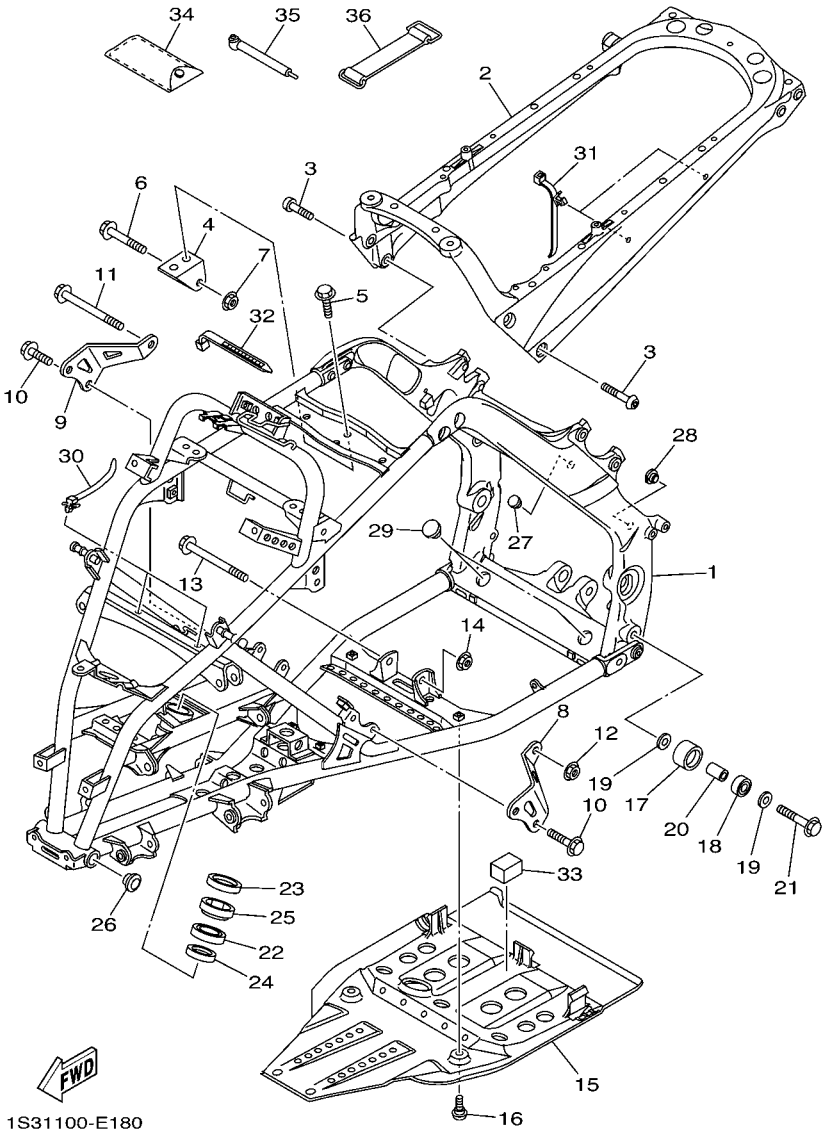


## FIG. 18 FRAME

| REF. NO. | PART NO. | DESCRIPTION | USA | CAN | EUR | OCE | | REMARKS |
|---|---|---|---|---|---|---|---|---|
| 1 | 1S3–21101–08 | FRONT FRAME COMP. | 1 | 1 | 1 | 1 | | |
| 2 | 1S3–21190–08 | REAR FRAME COMP. | 1 | 1 | 1 | 1 | | |
| 3 | 90149–10034 | SCREW | 4 | 4 | 4 | 4 | | |
| 4 | 1S3–21315–10 | STAY, ENGINE 2 | 1 | 1 | 1 | 1 | | |
| 5 | 95812–08014 | BOLT, FLANGE | 2 | 2 | 2 | 2 | | |
| 6 | 95812–10055 | BOLT, FLANGE | 1 | 1 | 1 | 1 | | |
| 7 | 95602–10200 | NUT, U FLANGE | 1 | 1 | 1 | 1 | | |
| 8 | 1S3–21316–10 | STAY, ENGINE 3 | 1 | 1 | 1 | 1 | | |
| 9 | 1S3–21317–10 | STAY, ENGINE 3 | 1 | 1 | 1 | 1 | | |
| 10 | 90105–08142 | BOLT, FLANGE | 4 | 4 | 4 | 4 | | |
| 11 | 95812–10110 | BOLT, FLANGE | 1 | 1 | 1 | 1 | | |
| 12 | 90185–10011 | NUT, SELF-LOCKING | 1 | 1 | 1 | 1 | | |
| 13 | 95812–10090 | BOLT, FLANGE | 1 | 1 | 1 | 1 | | |
| 14 | 90185–10011 | NUT, SELF-LOCKING | 1 | 1 | 1 | 1 | | |
| 15 | 1S3–21471–00 | PROTECTOR, ENGINE | 1 | 1 | 1 | 1 | | |
| 16 | 90109–06198 | BOLT | 4 | 4 | 4 | 4 | | |
| 17 | 5TG–22178–00 | TENSIONER | 1 | 1 | 1 | 1 | | |
| 18 | 93300–60804 | BEARING | 1 | 1 | 1 | 1 | | |
| 19 | 90201–08043 | WASHER, PLATE | 2 | 2 | 2 | 2 | | |
| 20 | 90387–08064 | COLLAR | 1 | 1 | 1 | 1 | | |
| 21 | 95812–08045 | BOLT, FLANGE | 1 | 1 | 1 | 1 | | |
| 22 | 93306–20352 | BEARING | 1 | 1 | 1 | 1 | | |
| 23 | 93102–25081 | OIL SEAL | 1 | 1 | 1 | 1 | | |
| 24 | 93102–25099 | OIL SEAL | 1 | 1 | 1 | 1 | | |
| 25 | 5GT–23872–00 | HOLDER, BEARING | 1 | 1 | 1 | 1 | | |
| 26 | 90338–26004 | PLUG | 2 | 2 | 2 | 2 | | |
| 27 | 90338–24260 | PLUG | 2 | 2 | 2 | 2 | | |

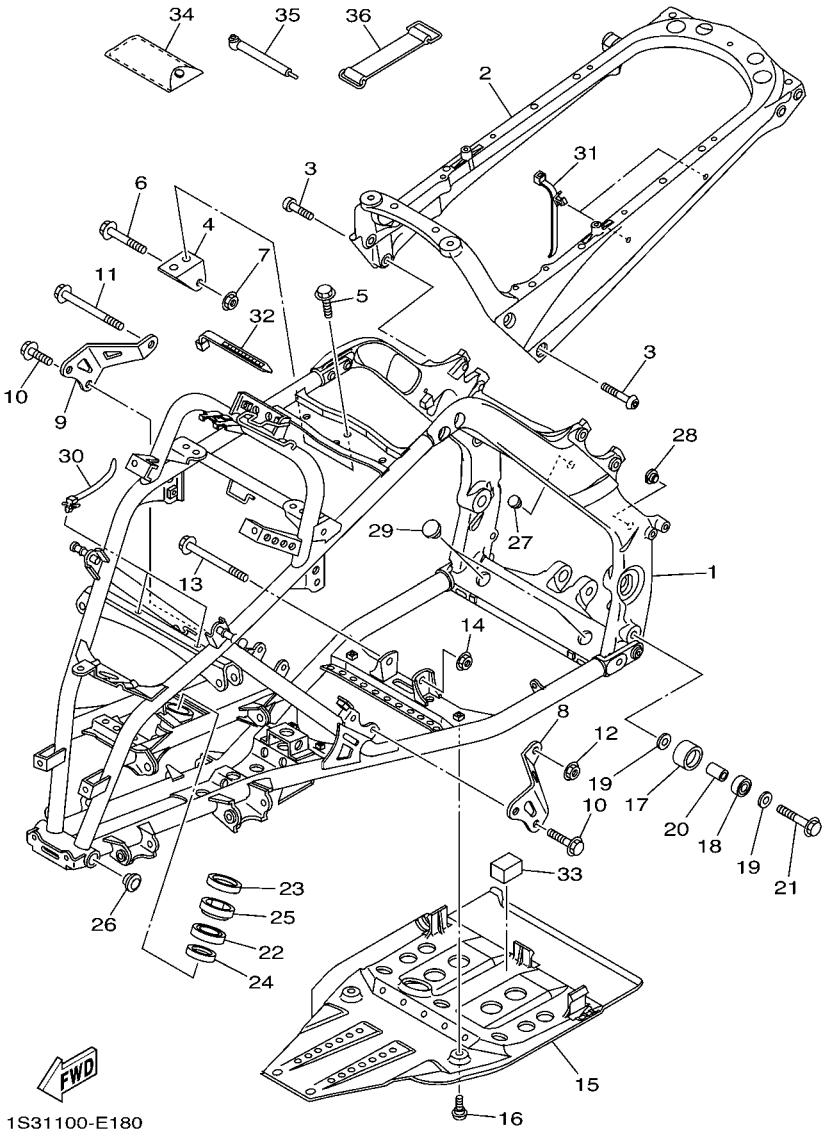


## FIG. 18 FRAME

| REF. NO. | PART NO. | DESCRIPTION | USA | CAN | EUR | OCE | | REMARKS |
|---|---|---|---|---|---|---|---|---|
| 28 | 90338–20183 | PLUG | 2 | 2 | 2 | 2 | | |
| 29 | 90338–23004 | PLUG | 2 | 2 | 2 | 2 | | |
| 30 | 90464–12036 | CLAMP | 2 | 2 | 2 | 2 | | |
| 31 | 90464–20213 | CLAMP | 3 | 3 | 3 | 3 | | |
| 32 | 90464–12045 | CLAMP | 1 | 1 | 1 | 1 | | |
| 33 | 1S3–2140A–00 | DAMPER, STOPPER | 1 | 1 | 1 | 1 | | |
| 34 | 5TG–28100–10 | TOOL KIT | 1 | 1 | 1 | 1 | | |
| 35 | 1NV–2811A–01 | GAUGE, AIR | 1 | 1 | 1 | 1 | | |
| 36 | 116–82131–00 | BAND, BATTERY | 1 | 1 | 1 | 1 | | |

## FIG. 19 FRONT FENDER

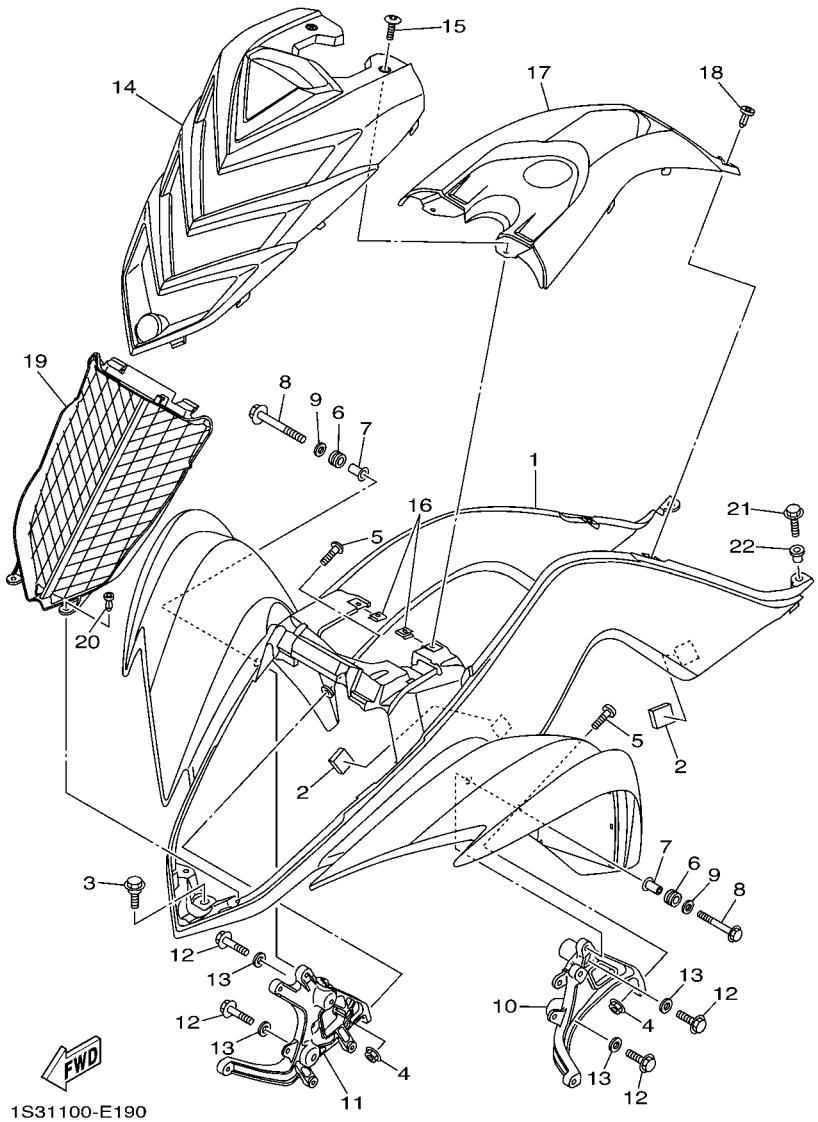


| REF. NO. | PART NO. | DESCRIPTION | USA | CAN | EUR | OCE | | REMARKS |
|---|---|---|---|---|---|---|---|---|
| 1 | 1S3–W2151–10 | FRONT FENDER COMP. | 1 | | | | | |
| | 1S3–W215C–10 | FRONT FENDER COMP.2 | | 1 | | | | |
| | 1S3–W215B–10 | FRONT FENDER COMP. 2 | | | 1 | | | |
| | 1S3–W215E–10 | FRONT FENDER COMP. | | | | 1 | | |
| 2 | 1S3–21541–00 | DAMPER 1 | 4 | 4 | 4 | 4 | | |
| 3 | 90109–06172 | BOLT | 1 | 1 | 1 | 1 | | |
| 4 | 95602–06200 | NUT, SELF-LOCKING | 2 | 2 | 2 | 2 | | |
| 5 | 90110–06202 | BOLT, HEXAGON SOCKET HEAD | 2 | 2 | 2 | 2 | | |
| 6 | 90480–14102 | GROMMET | 2 | 2 | 2 | 2 | | |
| 7 | 90387–06136 | COLLAR | 2 | 2 | 2 | 2 | | |
| 8 | 95812–06030 | BOLT, FLANGE | 2 | 2 | 2 | 2 | | |
| 9 | 90201–06078 | WASHER, PLATE | 2 | 2 | 2 | 2 | | |
| 10 | 1S3–21513–00 | STAY, FENDER 1 | 1 | 1 | 1 | 1 | | |
| 11 | 1S3–21514–00 | STAY, FENDER 2 | 1 | 1 | 1 | 1 | | |
| 12 | 95812–06014 | BOLT, FLANGE | 4 | 4 | 4 | 4 | | |
| 13 | 90201–06089 | WASHER, PLATE | 4 | 4 | 4 | 4 | | |
| 14 | 1S3–21556–E0 | FENDER, FRONT 2 | 1 | 1 | 1 | 1 | | |
| 15 | 90149–05299 | SCREW | 2 | 2 | 2 | 2 | | |
| 16 | 90183–05008 | NUT, SPRING | 2 | 2 | 2 | 2 | | |
| 17 | 1S3–2171A–C0 | COVER, TOP | 1 | 1 | 1 | 1 | | |
| 18 | 90269–06002 | RIVET | 2 | 2 | 2 | 2 | | |
| 19 | 1S3–12467–00 | COVER, RADIATOR | 1 | 1 | 1 | 1 | | |
| 20 | 90269–06002 | RIVET | 2 | 2 | 2 | 2 | | |
| 21 | 90105–06084 | BOLT, FLANGE | 2 | 2 | 2 | 2 | | |
| 22 | 90387–06146 | COLLAR | 2 | 2 | 2 | 2 | | |

## FIG. 20 REAR FENDER

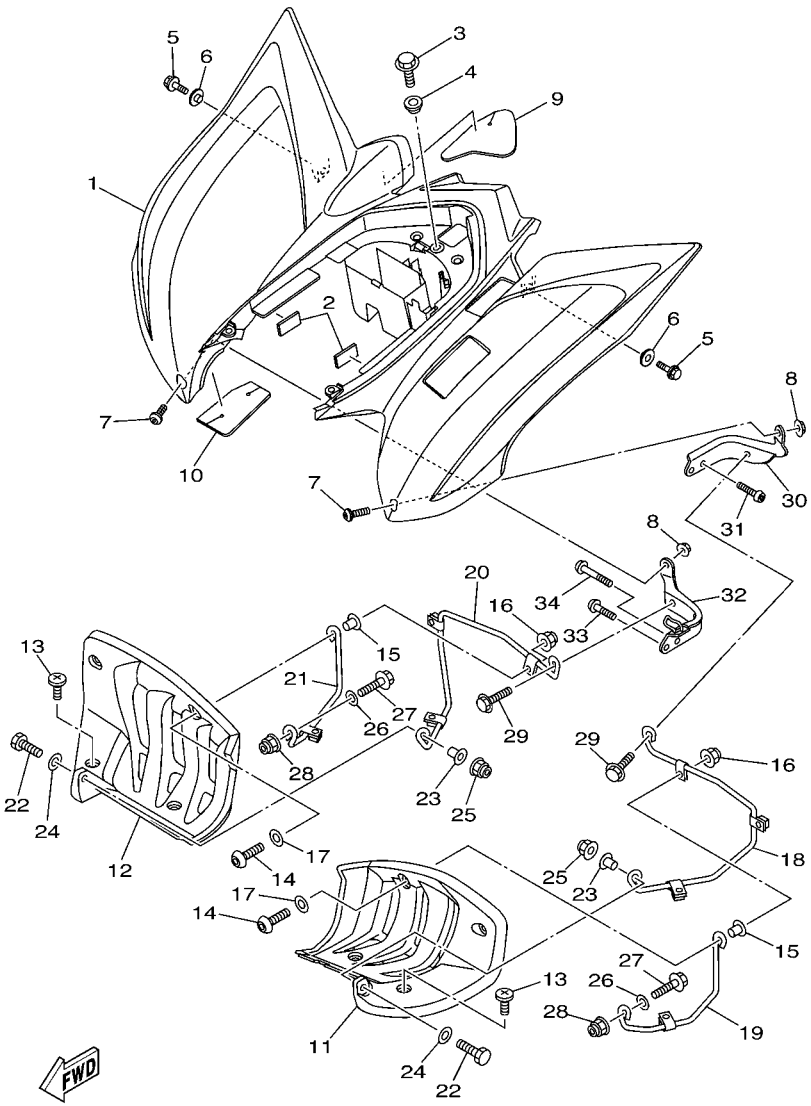


1S31100-E200

| REF. NO. | PART NO. | DESCRIPTION | USA | CAN | EUR | OCE | | REMARKS |
|---|---|---|---|---|---|---|---|---|
| 1 | 1S3–W2161–50 | REAR FENDER COMP. | 1 | | | 1 | | |
| | 1S3–W216C–50 | REAR FENDER COMP.2 | | 1 | | | | |
| | 1S3–W216B–50 | REAR FENDER COMP.2 | | | 1 | | | |
| 2 | 1S3–2140A–00 | DAMPER, STOPPER | 2 | 2 | 2 | 2 | | |
| 3 | 90105–06084 | BOLT, FLANGE | 1 | 1 | 1 | 1 | | |
| 4 | 90387–06153 | COLLAR | 1 | 1 | 1 | 1 | | |
| 5 | 95812–06014 | BOLT, FLANGE | 2 | 2 | 2 | 2 | | |
| 6 | 90387–06153 | COLLAR | 2 | 2 | 2 | 2 | | |
| 7 | 90111–06038 | BOLT,HEX. SOCKET BUTTON | 2 | 2 | 2 | 2 | | |
| 8 | 95602–06200 | NUT, SELF-LOCKING | 2 | 2 | 2 | 2 | | |
| 9 | 1S3–2163A–00 | COVER, REAR FENDER 1 | 1 | 1 | 1 | 1 | | |
| 10 | 1S3–2163E–00 | COVER, REAR FENDER 2 | 1 | 1 | 1 | 1 | | |
| 11 | 5TG–21621–00 | FLAP | 1 | 1 | 1 | 1 | | |
| 12 | 5TG–21691–00 | FLAP | 1 | 1 | 1 | 1 | | |
| 13 | 90154–05013 | SCREW, BINDING | 6 | 6 | 6 | 6 | | |
| 14 | 92012–06025 | BOLT, BUTTON HEAD | 2 | 2 | 2 | 2 | | |
| 15 | 90560–06201 | SPACER | 2 | 2 | 2 | 2 | | |
| 16 | 95602–06200 | NUT, SELF-LOCKING | 2 | 2 | 2 | 2 | | |
| 17 | 90201–06076 | WASHER, PLATE | 2 | 2 | 2 | 2 | | |
| 18 | 1S3–2164F–10 | STAY 1 | 1 | 1 | 1 | 1 | | |
| 19 | 1S3–2164H–10 | STAY 3 | 1 | 1 | 1 | 1 | | |
| 20 | 5TG–2164G–20 | STAY 2 | 1 | 1 | 1 | 1 | | |
| 21 | 1S3–2164J–10 | STAY 4 | 1 | 1 | 1 | 1 | | |
| 22 | 97022–06025 | BOLT | 2 | 2 | 2 | 2 | | |
| 23 | 90387–06204 | COLLAR | 2 | 2 | 2 | 2 | | |
| 24 | 90201–06093 | WASHER, PLATE | 2 | 2 | 2 | 2 | | |
| 25 | 95602–06200 | NUT, SELF-LOCKING | 2 | 2 | 2 | 2 | | |

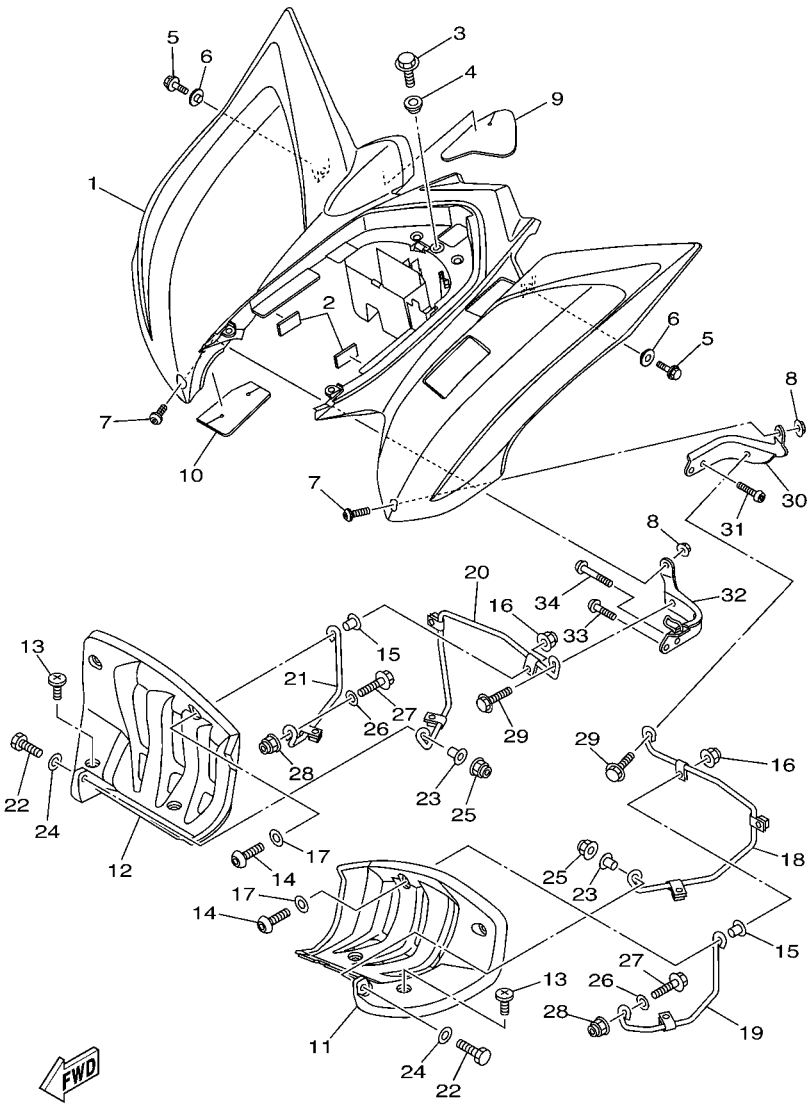


1S31100-E200

## FIG. 20 REAR FENDER

| REF. NO. | PART NO. | DESCRIPTION | USA | CAN | EUR | OCE | | REMARKS |
|---|---|---|---|---|---|---|---|---|
| 26 | 90201–08053 | WASHER, PLATE | 2 | 2 | 2 | 2 | | |
| 27 | 95822–08020 | BOLT, FLANGE | 2 | 2 | 2 | 2 | | |
| 28 | 95602–08200 | NUT, SELF-LOCKING | 2 | 2 | 2 | 2 | | |
| 29 | 95822–08016 | BOLT, FLANGE | 2 | 2 | 2 | 2 | | |
| 30 | 1S3–21643–10 | STAY, REAR | 1 | 1 | 1 | 1 | | |
| 31 | 92012–08020 | BOLT, BUTTON HEAD | 2 | 2 | 2 | 2 | | |
| 32 | 1S3–21644–10 | STAY, REAR | 1 | 1 | 1 | 1 | | |
| 33 | 92012–08016 | BOLT, BUTTON HEAD | 1 | 1 | 1 | 1 | | |
| 34 | 92012–08035 | BOLT, BUTTON HEAD | 1 | 1 | 1 | 1 | | |

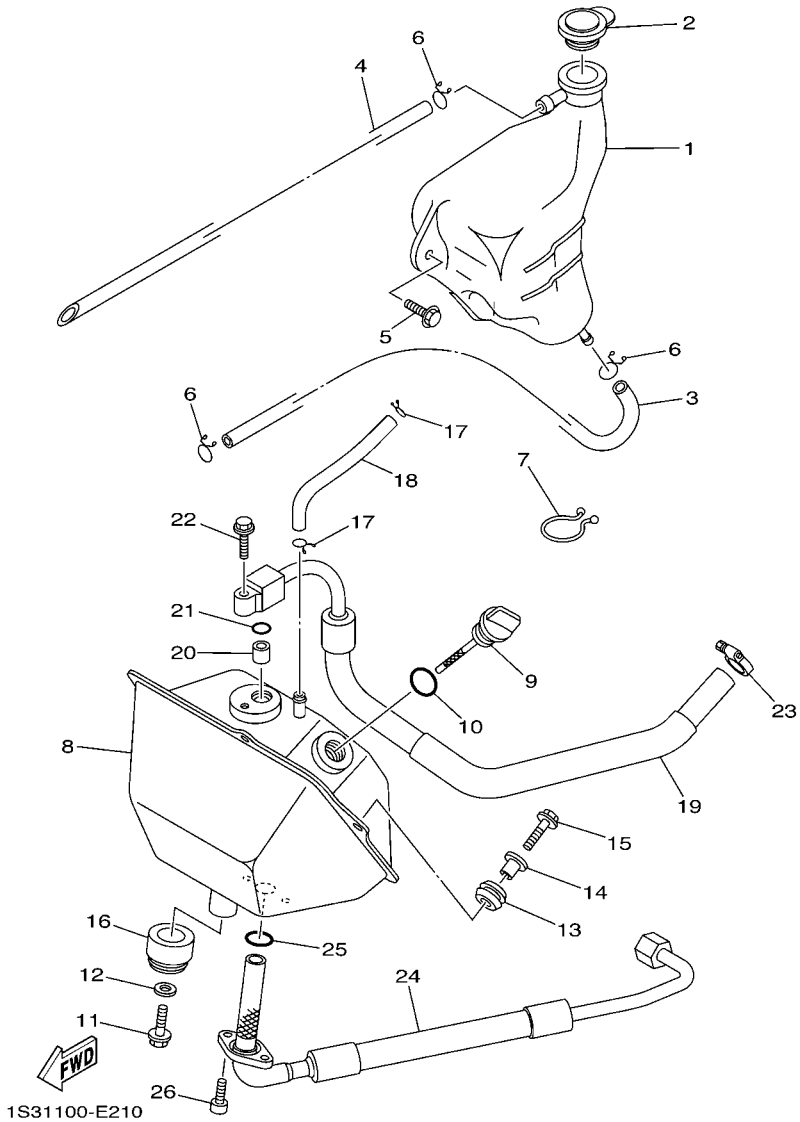


## FIG. 21 OIL TANK

| REF. NO. | PART NO. | DESCRIPTION | USA | CAN | EUR | OCE | | REMARKS |
|---|---|---|---|---|---|---|---|---|
| 1 | 5KM–21871–00 | TANK, RECOVERY | 1 | 1 | 1 | 1 | | |
| 2 | 1S3–21875–00 | CAP | 1 | 1 | 1 | 1 | | |
| 3 | 90445–09M30 | HOSE (L630) | 1 | 1 | 1 | 1 | | |
| 4 | 90445–09777 | HOSE (L300) | 1 | 1 | 1 | 1 | | |
| 5 | 90119–06152 | BOLT, WITH WASHER | 2 | 2 | 2 | 2 | | |
| 6 | 90467–08003 | CLIP | 3 | 3 | 3 | 3 | | |
| 7 | 90464–23041 | CLAMP | 2 | 2 | 2 | 2 | | |
| 8 | 1S3–21750–00 | OIL TANK ASSY | 1 | 1 | 1 | 1 | | |
| 9 | 5LP–21761–01 | GAUGE, LEVEL | 1 | 1 | 1 | 1 | | |
| 10 | 93210–21190 | O-RING | 1 | 1 | 1 | 1 | | |
| 11 | 95802–08016 | BOLT, FLANGE | 1 | 1 | 1 | 1 | | |
| 12 | 90201–082A6 | WASHER, PLATE | 1 | 1 | 1 | 1 | | |
| 13 | 90480–13459 | GROMMET | 2 | 2 | 2 | 2 | | |
| 14 | 90387–06205 | COLLAR | 2 | 2 | 2 | 2 | | |
| 15 | 95822–06020 | BOLT, FLANGE | 2 | 2 | 2 | 2 | | |
| 16 | 90480–24004 | GROMMET | 1 | 1 | 1 | 1 | | |
| 17 | 90467–10008 | CLIP | 2 | 2 | 2 | 2 | | |
| 18 | 90445–11034 | HOSE (L147) | 1 | 1 | 1 | 1 | | |
| 19 | 1S3–13465–00 | HOSE, OIL 2 | 1 | 1 | 1 | 1 | | |
| 20 | 99530–10114 | PIN, DOWEL | 1 | 1 | 1 | 1 | | |
| 21 | 93210–10197 | O-RING | 1 | 1 | 1 | 1 | | |
| 22 | 95022–06025 | BOLT, FLANGE | 1 | 1 | 1 | 1 | | |
| 23 | 90450–22017 | HOSE CLAMP ASSY | 1 | 1 | 1 | 1 | | |
| 24 | 1S3–13464–10 | HOSE, OIL 1 | 1 | 1 | 1 | 1 | | |
| 25 | 93210–16629 | O-RING | 1 | 1 | 1 | 1 | | |
| 26 | 91312–06016 | BOLT | 2 | 2 | 2 | 2 | | |

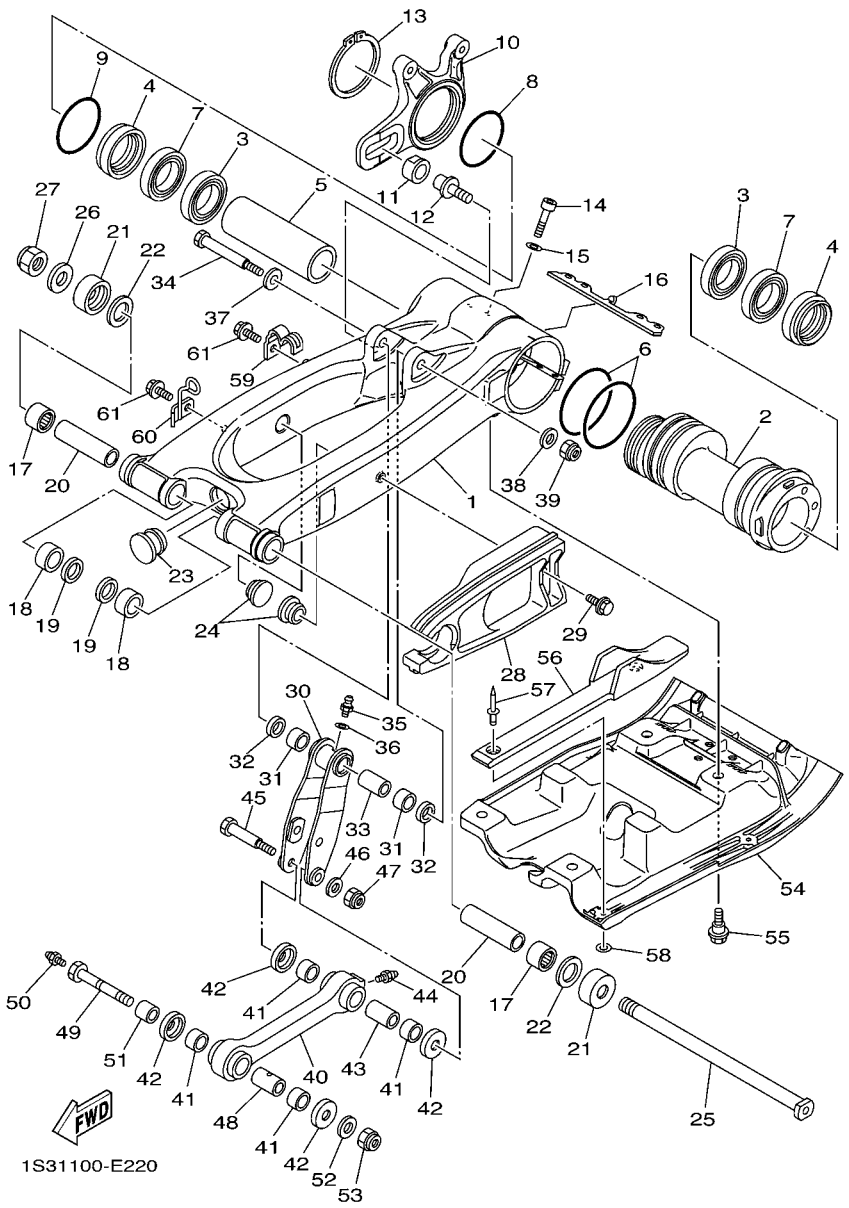


## FIG. 22 REAR ARM

| REF. NO. | PART NO. | DESCRIPTION | USA | CAN | EUR | OCE | | REMARKS |
|---|---|---|---|---|---|---|---|---|
| 1 | 1S3–22110–00 | REAR ARM COMP. | 1 | 1 | 1 | 1 | | |
| 2 | 1S3–25311–00 | HUB, REAR | 1 | 1 | 1 | 1 | | |
| 3 | 93306–90804 | BEARING | 2 | 2 | 2 | 2 | | |
| 4 | 93106–46003 | OIL SEAL | 2 | 2 | 2 | 2 | | |
| 5 | 1S3–25317–00 | SPACER, BEARING | 1 | 1 | 1 | 1 | | |
| 6 | 1S3–23147–01 | O-RING | 2 | 2 | 2 | 2 | | |
| 7 | 93306–90805 | BEARING | 2 | 2 | 2 | 2 | | |
| 8 | 93210–66001 | O-RING | 1 | 1 | 1 | 1 | | |
| 9 | 93210–71001 | O-RING | 1 | 1 | 1 | 1 | | |
| 10 | 1S3–25721–00 | BRACKET, CALIPER | 1 | 1 | 1 | 1 | | |
| 11 | 90387–16014 | COLLAR | 1 | 1 | 1 | 1 | | |
| 12 | 90110–12001 | BOLT, HEXAGON SOCKET HEAD | 1 | 1 | 1 | 1 | | |
| 13 | 93410–67085 | CIRCLIP | 1 | 1 | 1 | 1 | | |
| 14 | 91314–08040 | BOLT | 4 | 4 | 4 | 4 | | |
| 15 | 92903–08600 | WASHER, PLATE | 4 | 4 | 4 | 4 | | |
| 16 | 1S3–22475–00 | SEAL, DUST | 1 | 1 | 1 | 1 | | |
| 17 | 93317–22237 | BEARING | 2 | 2 | 2 | 2 | | |
| 18 | 90380–22111 | BUSH, SOLID | 2 | 2 | 2 | 2 | | |
| 19 | 93106–22019 | OIL SEAL (DC 22-28-8) | 2 | 2 | 2 | 2 | | |
| 20 | 1S3–22184–00 | BUSH | 2 | 2 | 2 | 2 | | |
| 21 | 4X7–22129–00 | COVER, THRUST 2 | 2 | 2 | 2 | 2 | | |
| 22 | 3YF–22149–00 | WASHER | 2 | 2 | 2 | 2 | | |
| 23 | 1S3–22417–00 | PLUG | 1 | 1 | 1 | 1 | | |
| 24 | 90338–23004 | PLUG | 2 | 2 | 2 | 2 | | |
| 25 | 1S3–22141–00 | SHAFT, PIVOT | 1 | 1 | 1 | 1 | | |
| 26 | 90201–16018 | WASHER, PLATE | 1 | 1 | 1 | 1 | | |
| 27 | 90185–16002 | NUT, SELF-LOCKING | 1 | 1 | 1 | 1 | | |

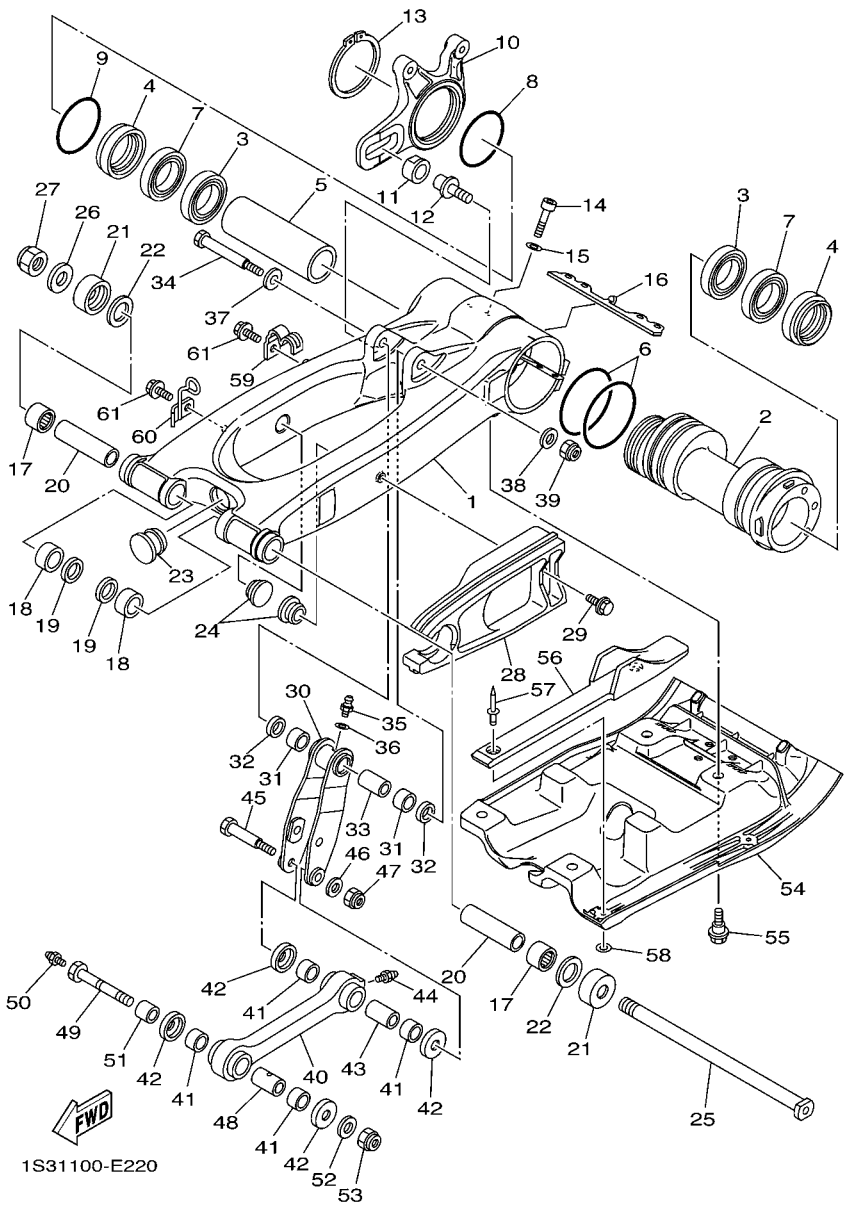


## FIG. 22 REAR ARM

| REF. NO. | PART NO. | DESCRIPTION | USA | CAN | EUR | OCE | | REMARKS |
|---|---|---|---|---|---|---|---|---|
| 28 | 1S3–22151–00 | SEAL, GUARD | 1 | 1 | 1 | 1 | | |
| 29 | 90109–06172 | BOLT | 1 | 1 | 1 | 1 | | |
| 30 | 1S3–2217A–00 | ARM, RELAY | 1 | 1 | 1 | 1 | | |
| 31 | 90383–20033 | BUSH, FORMED | 2 | 2 | 2 | 2 | | |
| 32 | 93109–20076 | OIL SEAL | 2 | 2 | 2 | 2 | | |
| 33 | 90387–12021 | COLLAR | 1 | 1 | 1 | 1 | | |
| 34 | 90109–10018 | BOLT | 1 | 1 | 1 | 1 | | |
| 35 | 93700–06004 | NIPPLE, GREASE | 1 | 1 | 1 | 1 | | |
| 36 | 90201–063F3 | WASHER, PLATE | 1 | 1 | 1 | 1 | | |
| 37 | 90201–12030 | WASHER, PLATE | 1 | 1 | 1 | 1 | | |
| 38 | 90201–10034 | WASHER, PLATE | 1 | 1 | 1 | 1 | | |
| 39 | 90185–10012 | NUT, SELF-LOCKING | 1 | 1 | 1 | 1 | | |
| 40 | 1S3–2217F–00 | ROD, CONNECTING 1 | 1 | 1 | 1 | 1 | | |
| 41 | 90383–20032 | BUSH, FORMED | 4 | 4 | 4 | 4 | | |
| 42 | 5YT–22129–00 | COVER, THRUST 2 | 4 | 4 | 4 | 4 | | |
| 43 | 90387–125K2 | COLLAR | 1 | 1 | 1 | 1 | | |
| 44 | 93700–06004 | NIPPLE, GREASE | 1 | 1 | 1 | 1 | | |
| 45 | 90109–10020 | BOLT | 1 | 1 | 1 | 1 | | |
| 46 | 90201–10035 | WASHER, PLATE | 1 | 1 | 1 | 1 | | |
| 47 | 90185–10012 | NUT, SELF-LOCKING | 1 | 1 | 1 | 1 | | |
| 48 | 90387–12010 | COLLAR | 1 | 1 | 1 | 1 | | |
| 49 | 90109–12009 | BOLT | 1 | 1 | 1 | 1 | | |
| 50 | 93700–06004 | NIPPLE, GREASE | 1 | 1 | 1 | 1 | | |
| 51 | 90387–12028 | COLLAR | 1 | 1 | 1 | 1 | | |
| 52 | 90201–12032 | WASHER, PLATE | 1 | 1 | 1 | 1 | | |
| 53 | 90185–12007 | NUT, SELF-LOCKING | 1 | 1 | 1 | 1 | | |
| 54 | 1S3–2219X–00 | COVER | 1 | 1 | 1 | 1 | | |

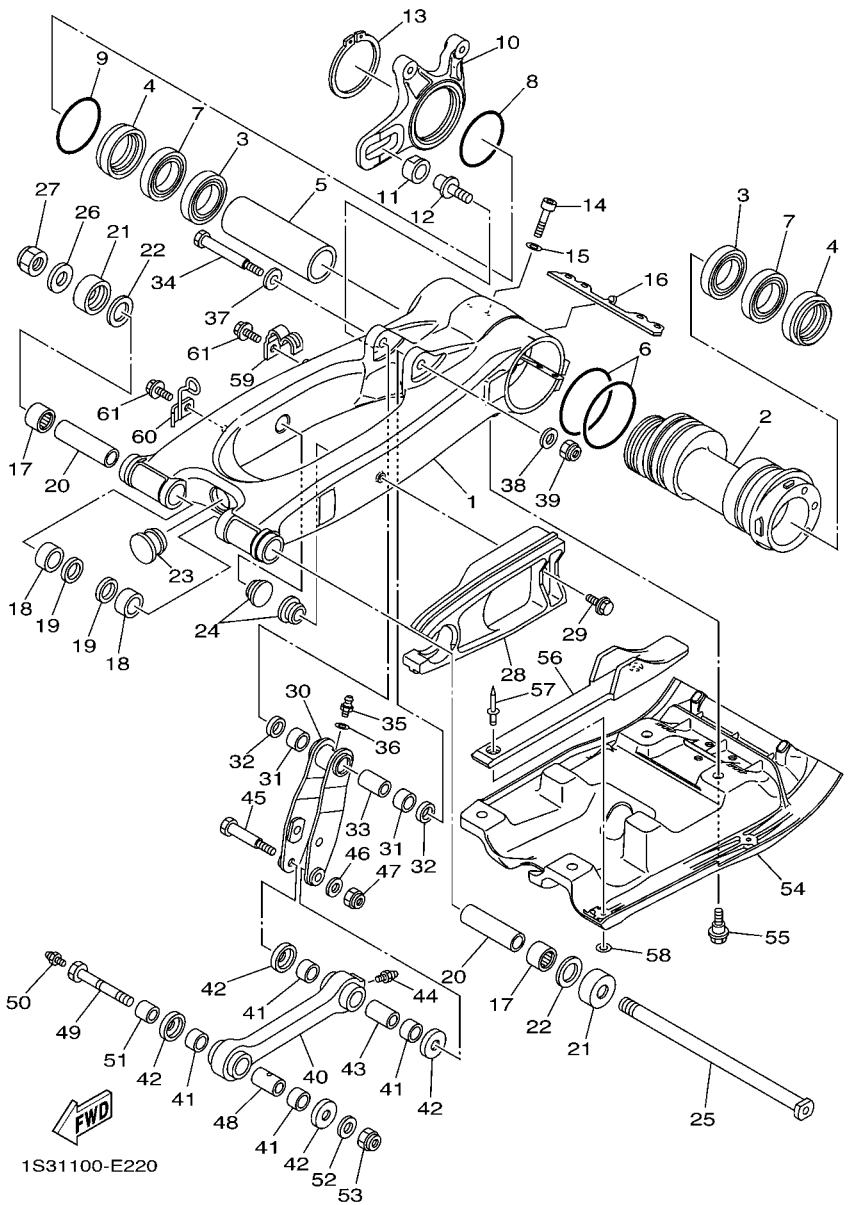


## FIG. 22 REAR ARM

| REF. NO. | PART NO. | DESCRIPTION | USA | CAN | EUR | OCE | | REMARKS |
|---|---|---|---|---|---|---|---|---|
| 55 | 90109–06199 | BOLT | 4 | 4 | 4 | 4 | | |
| 56 | 1S3–22153–00 | GUARD, CHAIN | 1 | 1 | 1 | 1 | | |
| 57 | 90267–47187 | RIVET, BLIND | 2 | 2 | 2 | 2 | | |
| 58 | 90201–04027 | WASHER, PLATE | 2 | 2 | 2 | 2 | | |
| 59 | 1S3–25886–00 | HOLDER, BRAKE HOSE | 1 | 1 | 1 | 1 | | |
| 60 | 1S3–23317–00 | HOLDER, CABLE | 1 | 1 | 1 | 1 | | |
| 61 | 95022–06012 | BOLT, FLANGE | 2 | 2 | 2 | 2 | | |

## FIG. 23 REAR SUSPENSION

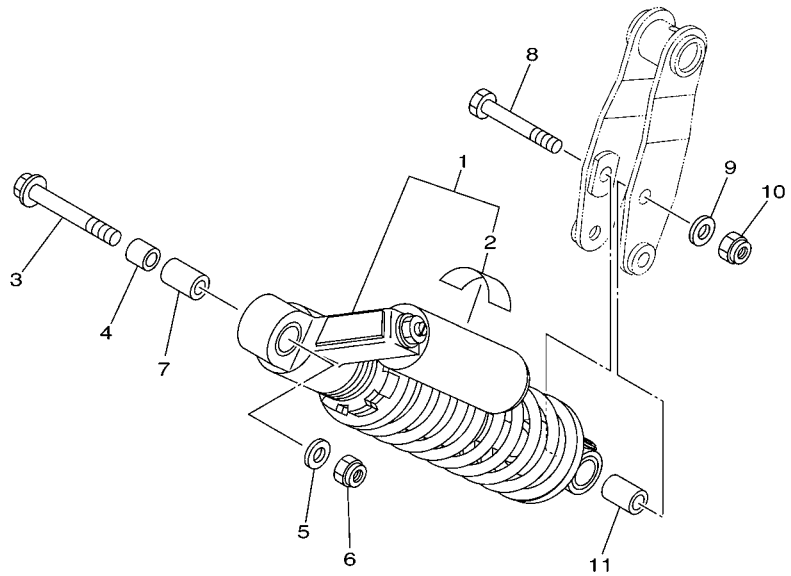

1S31100-E230

| REF. NO. | PART NO. | DESCRIPTION | USA | CAN | EUR | OCE | | REMARKS |
|---|---|---|---|---|---|---|---|---|
| 1 | 1S3–22210–C0 | SHOCK ABSORBER ASSY, REAR | 1 | | | | | |
| | 1S3–22210–D0 | SHOCK ABSORBER ASSY, REAR | | 1 | | | | |
| | 1S3–22210–E0 | SHOCK ABSORBER ASSY, REAR | | | 1 | 1 | | |
| 2 | 4AA–22259–80 | .LABEL, WARNING | 1 | | | | | |
| | 4AA–22259–70 | .LABEL, WARNING | | 1 | | | | |
| | 4AA–22259–40 | .LABEL, WARNING | | | 1 | 1 | | |
| 3 | 90105–12038 | BOLT, FLANGE | 1 | 1 | 1 | 1 | | |
| 4 | 90387–12028 | COLLAR | 1 | 1 | 1 | 1 | | |
| 5 | 90201–12032 | WASHER, PLATE | 1 | 1 | 1 | 1 | | |
| 6 | 90185–12007 | NUT, SELF-LOCKING | 1 | 1 | 1 | 1 | | |
| 7 | 90387–12020 | COLLAR | 1 | 1 | 1 | 1 | | |
| 8 | 90109–10019 | BOLT | 1 | 1 | 1 | 1 | | |
| 9 | 90201–10036 | WASHER, PLATE | 1 | 1 | 1 | 1 | | |
| 10 | 90185–10012 | NUT, SELF-LOCKING | 1 | 1 | 1 | 1 | | |
| 11 | 90387–127W0 | COLLAR | 1 | 1 | 1 | 1 | | |

## FIG. 24 STEERING

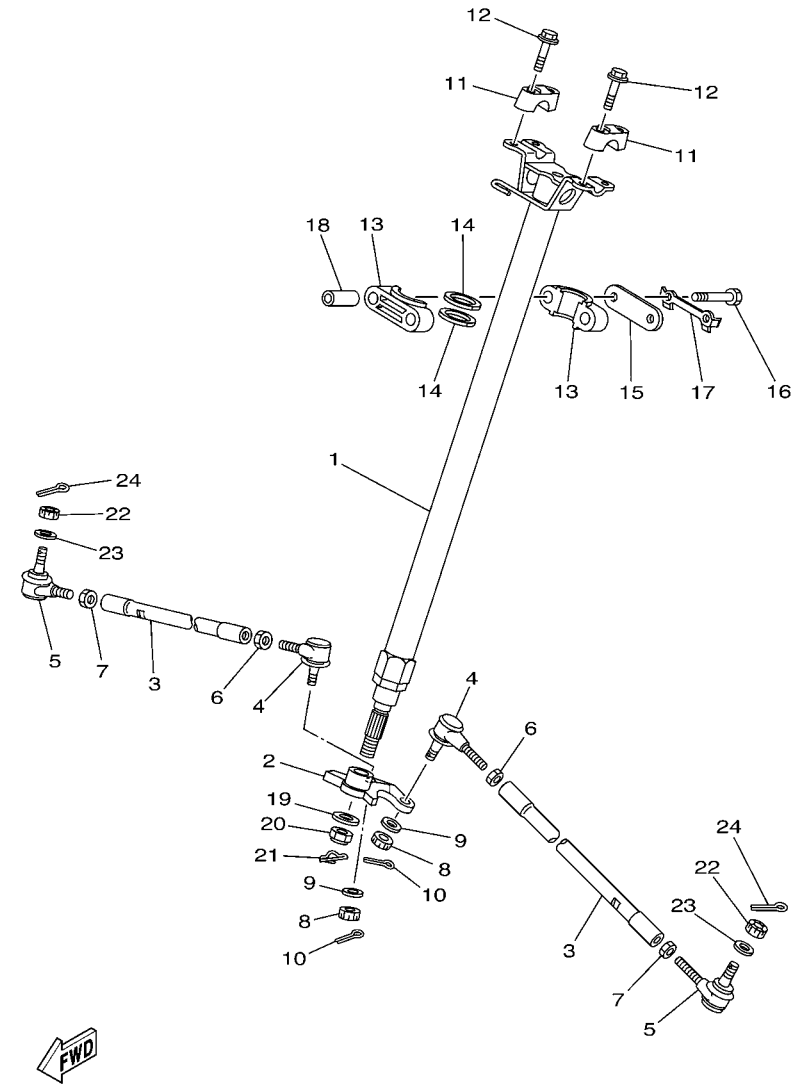


1S31100-E240

| REF. NO. | PART NO. | DESCRIPTION | USA | CAN | EUR | OCE | | REMARKS |
|---|---|---|---|---|---|---|---|---|
| 1 | 1S3–23813–10 | COLUMN, STEERING 2 | 1 | 1 | 1 | 1 | | |
| 2 | 5TG–23816–10 | ARM, PITMAN | 1 | 1 | 1 | 1 | | |
| 3 | 1S3–23831–20 | ROD, TIE | 2 | 2 | 2 | 2 | | |
| 4 | 1S3–23841–20 | JOINT, UNIVERSAL 1 | 2 | 2 | 2 | 2 | | |
| 5 | 1S3–23845–20 | JOINT, UNIVERSAL 2 | 2 | 2 | 2 | 2 | | |
| 6 | 90170–12055 | NUT | 2 | 2 | 2 | 2 | | |
| 7 | 90170–12054 | NUT | 2 | 2 | 2 | 2 | | (RH. THREAD) |
| 8 | 90171–10001 | NUT, CASTLE | 2 | 2 | 2 | 2 | | |
| 9 | 90209–10229 | WASHER | 2 | 2 | 2 | 2 | | |
| 10 | 91402–20020 | PIN, COTTER | 2 | 2 | 2 | 2 | | |
| 11 | 8K1–23814–00 | HOLDER, HANDLE | 2 | 2 | 2 | 2 | | |
| 12 | 95822–08030 | BOLT, FLANGE | 4 | 4 | 4 | 4 | | |
| 13 | 1UY–23812–00 | PLANE BEARING, STEERING | 2 | 2 | 2 | 2 | | |
| 14 | 93112–31011 | OIL SEAL | 2 | 2 | 2 | 2 | | |
| 15 | 1UY–23868–01 | BRACKET, STEERING LOWER | 1 | 1 | 1 | 1 | | |
| 16 | 97022–08060 | BOLT | 2 | 2 | 2 | 2 | | |
| 17 | 1UY–23894–01 | WASHER, LOCK 1 | 1 | 1 | 1 | 1 | | |
| 18 | 90387–090R0 | COLLAR | 2 | 2 | 2 | 2 | | |
| 19 | 90201–14021 | WASHER, PLATE | 1 | 1 | 1 | 1 | | |
| 20 | 90185–14009 | NUT, SELF-LOCKING | 1 | 1 | 1 | 1 | | |
| 21 | 90468–16191 | CLIP | 1 | 1 | 1 | 1 | | |
| 22 | 90171–10001 | NUT, CASTLE | 2 | 2 | 2 | 2 | | |
| 23 | 90209–10229 | WASHER | 2 | 2 | 2 | 2 | | |
| 24 | 91402–20020 | PIN, COTTER | 2 | 2 | 2 | 2 | | |

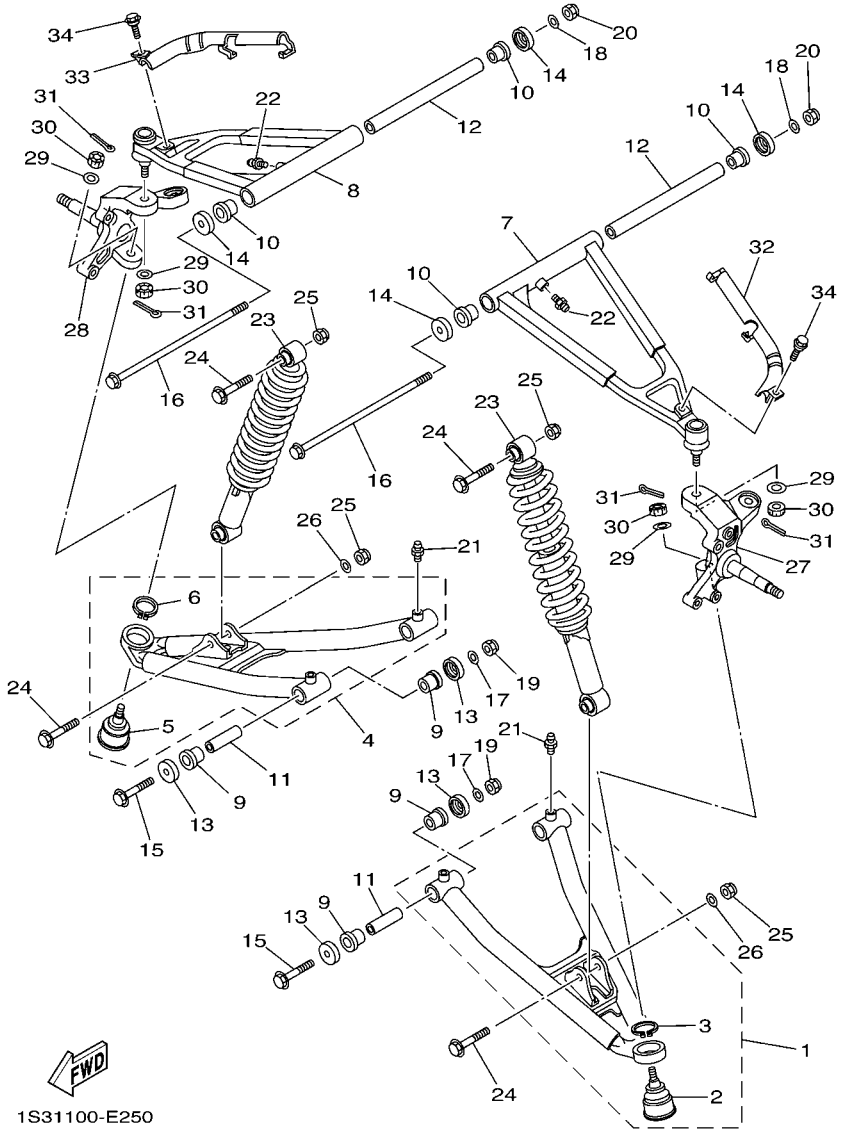


## FIG. 25 FRONT SUSPENSION & WHEEL

| REF. NO. | PART NO. | DESCRIPTION | USA | CAN | EUR | OCE | | REMARKS |
|---|---|---|---|---|---|---|---|---|
| 1 | 5TG–23570–50 | FRONT LOWER ARM COMP. (LEFT) | 1 | 1 | 1 | 1 | | |
| 2 | 5LP–23579–00 | .BALL JOINT 2 | 1 | 1 | 1 | 1 | | |
| 3 | 99009–30400 | .CIRCLIP | 1 | 1 | 1 | 1 | | |
| 4 | 5TG–23580–50 | FRONT LOWER ARM COMP. (RIGHT) | 1 | 1 | 1 | 1 | | |
| 5 | 5LP–23579–00 | .BALL JOINT 2 | 1 | 1 | 1 | 1 | | |
| 6 | 99009–30400 | .CIRCLIP | 1 | 1 | 1 | 1 | | |
| 7 | 5TG–23540–50 | FRONT UPPER ARM COMP. (LEFT) | 1 | 1 | 1 | 1 | | |
| 8 | 5TG–23550–50 | FRONT UPPER ARM COMP. (RIGHT) | 1 | 1 | 1 | 1 | | |
| 9 | 90381–15088 | BUSH, SOLID | 8 | 8 | 8 | 8 | | |
| 10 | 90381–15088 | BUSH, SOLID | 4 | 4 | 4 | 4 | | |
| 11 | 90387–101R3 | COLLAR | 4 | 4 | 4 | 4 | | |
| 12 | 90387–100Y6 | COLLAR | 2 | 2 | 2 | 2 | | |
| 13 | 5YT–23517–00 | COVER, THRUST 1 | 8 | 8 | 8 | 8 | | |
| 14 | 5YT–23517–00 | COVER, THRUST 1 | 4 | 4 | 4 | 4 | | |
| 15 | 90105–10135 | BOLT, FLANGE | 4 | 4 | 4 | 4 | | |
| 16 | 90105–10132 | BOLT, FLANGE | 2 | 2 | 2 | 2 | | |
| 17 | 90201–10037 | WASHER, PLATE | 4 | 4 | 4 | 4 | | |
| 18 | 90201–10037 | WASHER, PLATE | 2 | 2 | 2 | 2 | | |
| 19 | 90185–10012 | NUT, SELF-LOCKING | 4 | 4 | 4 | 4 | | |
| 20 | 90185–10012 | NUT, SELF-LOCKING | 2 | 2 | 2 | 2 | | |
| 21 | 93700–06004 | NIPPLE, GREASE | 4 | 4 | 4 | 4 | | |
| 22 | 93700–06004 | NIPPLE, GREASE | 2 | 2 | 2 | 2 | | |
| 23 | 1S3–23350–A0 | SHOCK ABSORBER ASSY | 2 | | | | | |
| | 1S3–23350–B0 | SHOCK ABSORBER ASSY | | 2 | | | | |
| | 1S3–23350–C0 | SHOCK ABSORBER ASSY | | | 2 | 2 | | |
| 24 | 90105–10131 | BOLT, FLANGE | 4 | 4 | 4 | 4 | | |
| 25 | 90185–10012 | NUT, SELF-LOCKING | 4 | 4 | 4 | 4 | | |

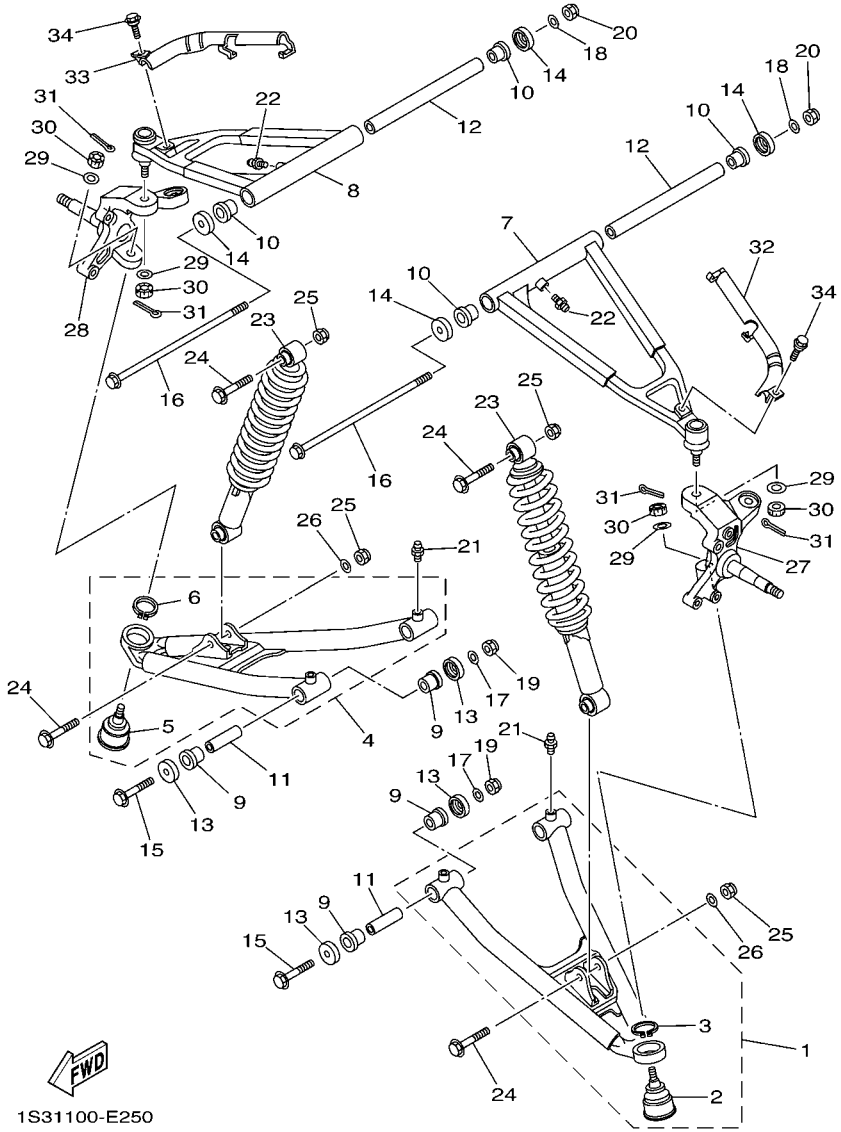


## FIG. 25 FRONT SUSPENSION & WHEEL

| REF. NO. | PART NO. | DESCRIPTION | USA | CAN | EUR | OCE | | REMARKS |
|---|---|---|---|---|---|---|---|---|
| 26 | 90201–10035 | WASHER, PLATE | 2 | 2 | 2 | 2 | | |
| 27 | 1S3–23501–00 | STEERING KNUCKLE ASSY (LEFT) | 1 | 1 | 1 | 1 | | |
| 28 | 1S3–23502–00 | STEERING KNUCKLE ASSY (RIGHT) | 1 | 1 | 1 | 1 | | |
| 29 | 90209–10229 | WASHER | 4 | 4 | 4 | 4 | | |
| 30 | 90171–10001 | NUT, CASTLE | 4 | 4 | 4 | 4 | | |
| 31 | 91402–20020 | PIN, COTTER | 4 | 4 | 4 | 4 | | |
| 32 | 5TG–25875–00 | HOLDER, BRAKE HOSE 1 | 1 | 1 | 1 | 1 | | |
| 33 | 5TG–25876–00 | HOLDER, BRAKE HOSE 2 | 1 | 1 | 1 | 1 | | |
| 34 | 90109–067F4 | BOLT | 2 | 2 | 2 | 2 | | |

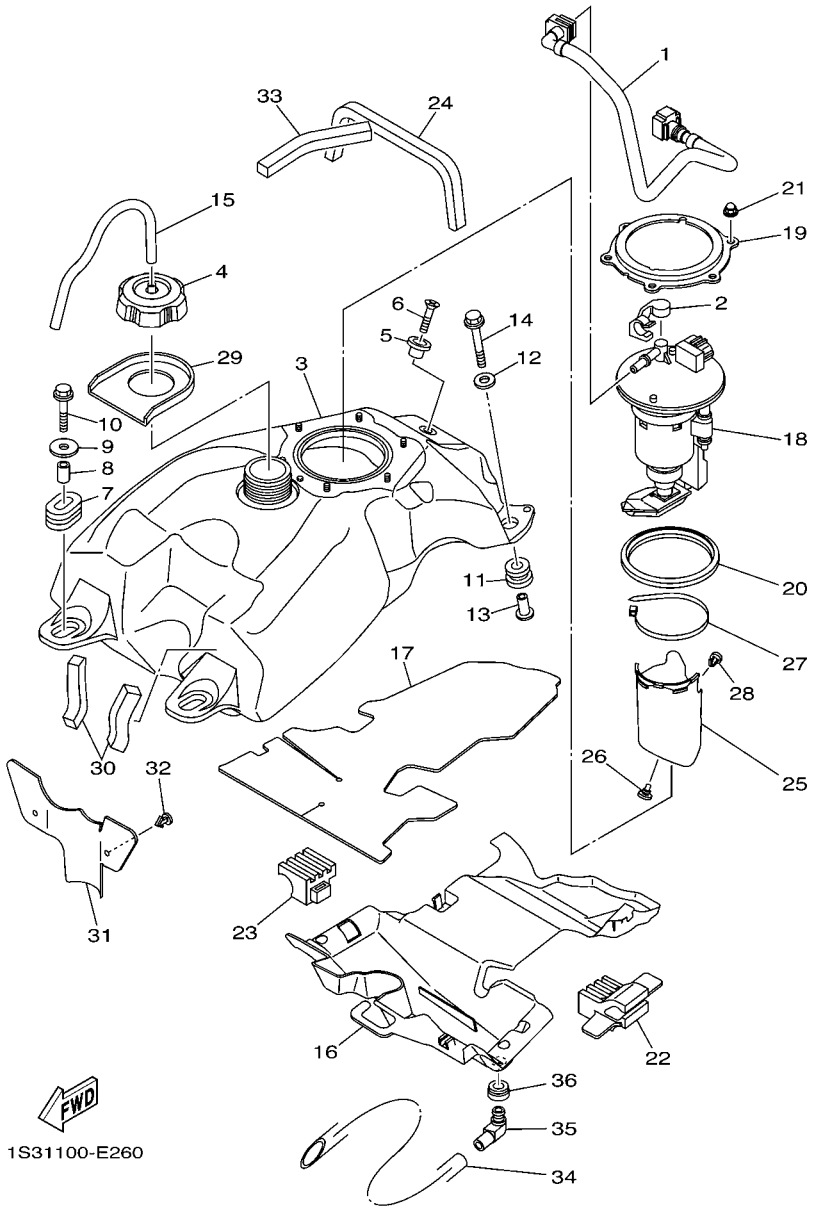


## FIG. 26 FUEL TANK

| REF. NO. | PART NO. | DESCRIPTION | USA | CAN | EUR | OCE | | REMARKS |
|---|---|---|---|---|---|---|---|---|
| 1 | 1S3–13971–10 | PIPE, FUEL 1 | 1 | 1 | | | | |
| | 1S3–13971–00 | PIPE, FUEL 1 | | | 1 | 1 | | |
| 2 | 90464–14004 | CLAMP | 1 | 1 | 1 | 1 | | |
| 3 | 1S3–24110–20 | FUEL TANK COMP. | 1 | 1 | | | | |
| | 1S3–24110–00 | FUEL TANK COMP. | | | 1 | 1 | | |
| 4 | 2FJ–24610–00 | CAP ASSY | 1 | 1 | 1 | 1 | | |
| 5 | 4EW–2412F–00 | BRACKET, SEAT | 1 | 1 | 1 | 1 | | |
| 6 | 98702–06025 | SCREW, FLAT HEAD | 1 | 1 | 1 | 1 | | |
| 7 | 90480–01017 | GROMMET | 2 | 2 | 2 | 2 | | |
| 8 | 90387–06M17 | COLLAR | 2 | 2 | 2 | 2 | | |
| 9 | 90201–06090 | WASHER, PLATE | 2 | 2 | 2 | 2 | | |
| 10 | 95802–06035 | BOLT, FLANGE | 2 | 2 | 2 | 2 | | |
| 11 | 90480–18005 | GROMMET | 2 | 2 | 2 | 2 | | |
| 12 | 90201–06033 | WASHER, PLATE | 2 | 2 | 2 | 2 | | |
| 13 | 90387–06098 | COLLAR | 2 | 2 | 2 | 2 | | |
| 14 | 95802–06035 | BOLT, FLANGE | 2 | 2 | 2 | 2 | | |
| 15 | 90445–083J4 | HOSE (L340) | 1 | 1 | 1 | 1 | | |
| 16 | 1S3–2414H–00 | DAMPER, PLATE 1 | 1 | 1 | 1 | 1 | | |
| 17 | 1S3–2416F–00 | INSULATOR, FUEL TANK 1 | 1 | 1 | 1 | 1 | | |
| 18 | 1S3–13907–02 | FUEL PUMP COMP. | 1 | 1 | 1 | 1 | | |
| 19 | 1S3–24491–10 | BRACKET, FUEL PUMP | 1 | 1 | 1 | 1 | | |
| 20 | 1S3–24486–00 | O-RING | 1 | 1 | 1 | 1 | | |
| 21 | 95302–06800 | NUT, CROWN | 6 | 6 | 6 | 6 | | |
| 22 | 1S3–24278–00 | STOPPER 1 | 1 | 1 | 1 | 1 | | |
| 23 | 1S3–24279–00 | STOPPER 2 | 1 | 1 | 1 | 1 | | |
| 24 | 1S3–24181–00 | DAMPER, LOCATING 1 | 1 | 1 | 1 | 1 | | |
| 25 | 1S3–24452–00 | COVER | 1 | 1 | 1 | 1 | | |

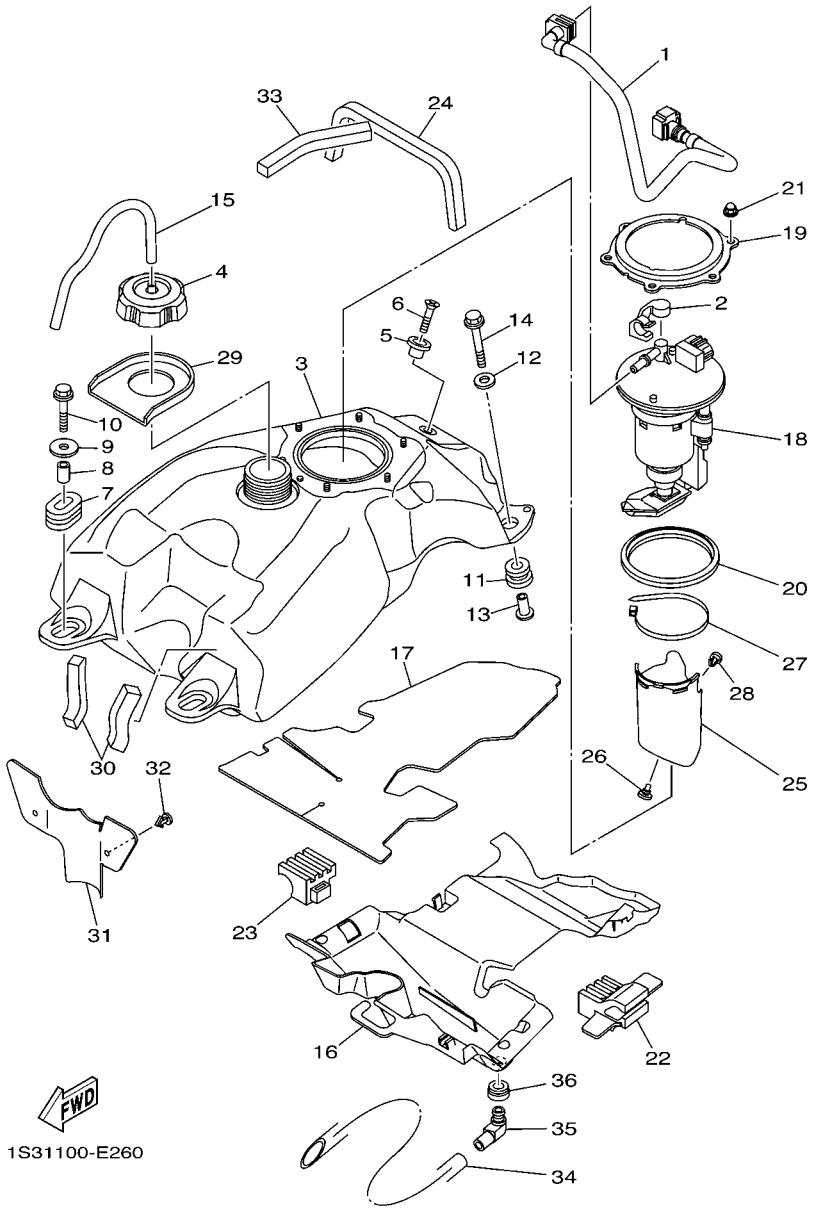


## FIG. 26 FUEL TANK

| REF. NO. | PART NO. | DESCRIPTION | USA | CAN | EUR | OCE | | REMARKS |
|---|---|---|---|---|---|---|---|---|
| 26 | 90338–05008 | PLUG | 2 | 2 | 2 | 2 | | |
| 27 | 90464–66001 | CLAMP | 1 | 1 | 1 | 1 | | |
| 28 | 90269–07011 | RIVET | 1 | 1 | 1 | 1 | | |
| 29 | 1S3–2414J–00 | DAMPER, PLATE 2 | 1 | 1 | 1 | 1 | | |
| 30 | 1S3–24182–00 | DAMPER, LOCATING 2 | 2 | 2 | 2 | 2 | | |
| 31 | 1S3–2413X–00 | PLATE | 1 | 1 | 1 | 1 | | |
| 32 | 90269–05055 | RIVET | 2 | 2 | 2 | 2 | | |
| 33 | 1S3–24183–00 | DAMPER, LOCATING 3 | 1 | 1 | 1 | 1 | | |
| 34 | 90445–16007 | HOSE (L400) | 1 | 1 | 1 | 1 | | |
| 35 | 31A–14419–00 | PIPE | 1 | 1 | 1 | 1 | | |
| 36 | 31A–14435–00 | GROMMET | 1 | 1 | 1 | 1 | | |

## FIG. 27 SEAT

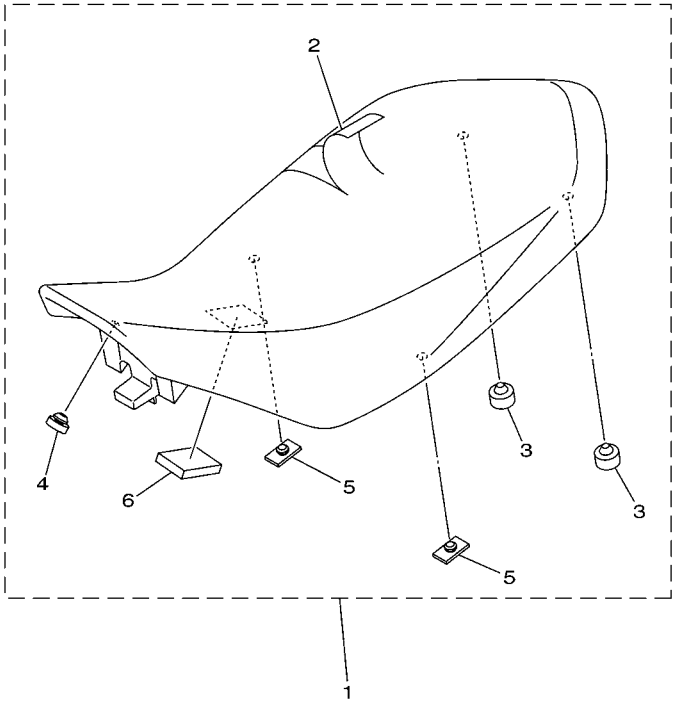

1S31100-E270

| REF. NO. | PART NO. | DESCRIPTION | USA | CAN | EUR | OCE | | REMARKS |
|---|---|---|---|---|---|---|---|---|
| 1 | 1S3–24710–40 | SINGLE SEAT ASSY | 1 | 1 | 1 | 1 | | |
| 2 | 1S3–24731–40 | .COVER, SEAT | 1 | 1 | 1 | 1 | | |
| 3 | 371–27114–00 | .STOPPER, MAIN STAND | 2 | 2 | 2 | 2 | | |
| 4 | 22W–24741–00 | .PAD, SEAT | 1 | 1 | 1 | 1 | | |
| 5 | 509–24724–00 | .DAMPER, SEAT | 2 | 2 | 2 | 2 | | |
| 6 | 1S3–24723–00 | .DAMPER, SEAT | 1 | 1 | 1 | 1 | | |

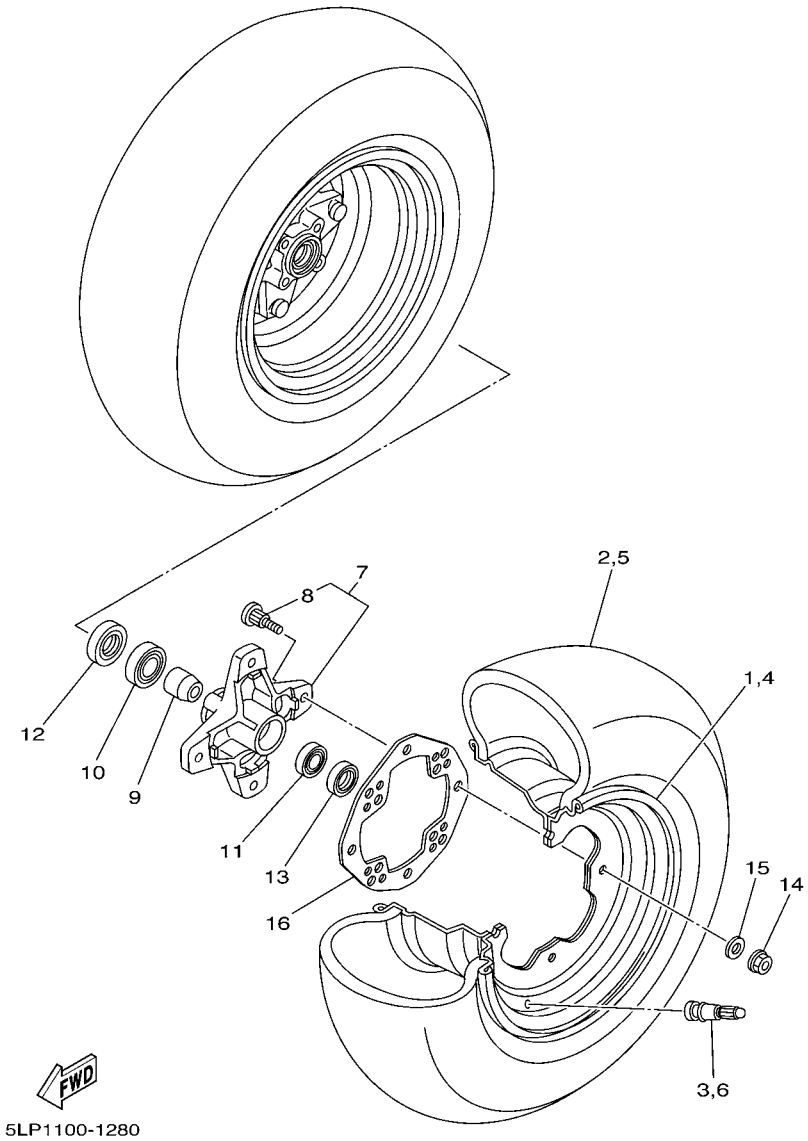


## FIG. 28 FRONT WHEEL

| REF. NO. | PART NO. | DESCRIPTION | USA | CAN | EUR | OCE | | REMARKS |
|---|---|---|---|---|---|---|---|---|
| 1 | 5LP–25180–20 | WHEEL COMP. | 1 | 1 | 1 | 1 | | |
| 2 | 94107–10015 | TIRE (AT21X7R10 KT341 T/L N) | 1 | 1 | 1 | 1 | | DUNLOP |
| 3 | 93900–00030 | VALVE, RIM (TR412) | 1 | 1 | 1 | 1 | | TAIHEIYO |
| 4 | 5LP–25180–20 | WHEEL COMP. | 1 | 1 | 1 | 1 | | |
| 5 | 94107–10015 | TIRE (AT21X7R10 KT341 T/L N) | 1 | 1 | 1 | 1 | | DUNLOP |
| 6 | 93900–00030 | VALVE, RIM (TR412) | 1 | 1 | 1 | 1 | | TAIHEIYO |
| 7 | 1S3–25111–00 | HUB, FRONT | 2 | 2 | 2 | 2 | | |
| 8 | 90114–10006 | .BOLT, SERRATION | 4 | 4 | 4 | 4 | | |
| 9 | 5LP–25117–00 | SPACER, BEARING | 2 | 2 | 2 | 2 | | |
| 10 | 93306–00446 | BEARING | 2 | 2 | 2 | 2 | | |
| 11 | 93306–20231 | BEARING | 2 | 2 | 2 | 2 | | |
| 12 | 93105–26026 | OIL SEAL | 2 | 2 | 2 | 2 | | |
| 13 | 93102–22216 | OIL SEAL | 2 | 2 | 2 | 2 | | |
| 14 | 95702–10500 | NUT, WITH WASHER | 8 | 8 | 8 | 8 | | |
| 15 | 92902–10200 | WASHER | 8 | 8 | 8 | 8 | | |
| 16 | 1S3–25127–00 | COVER, PLATE | 2 | 2 | 2 | 2 | | |

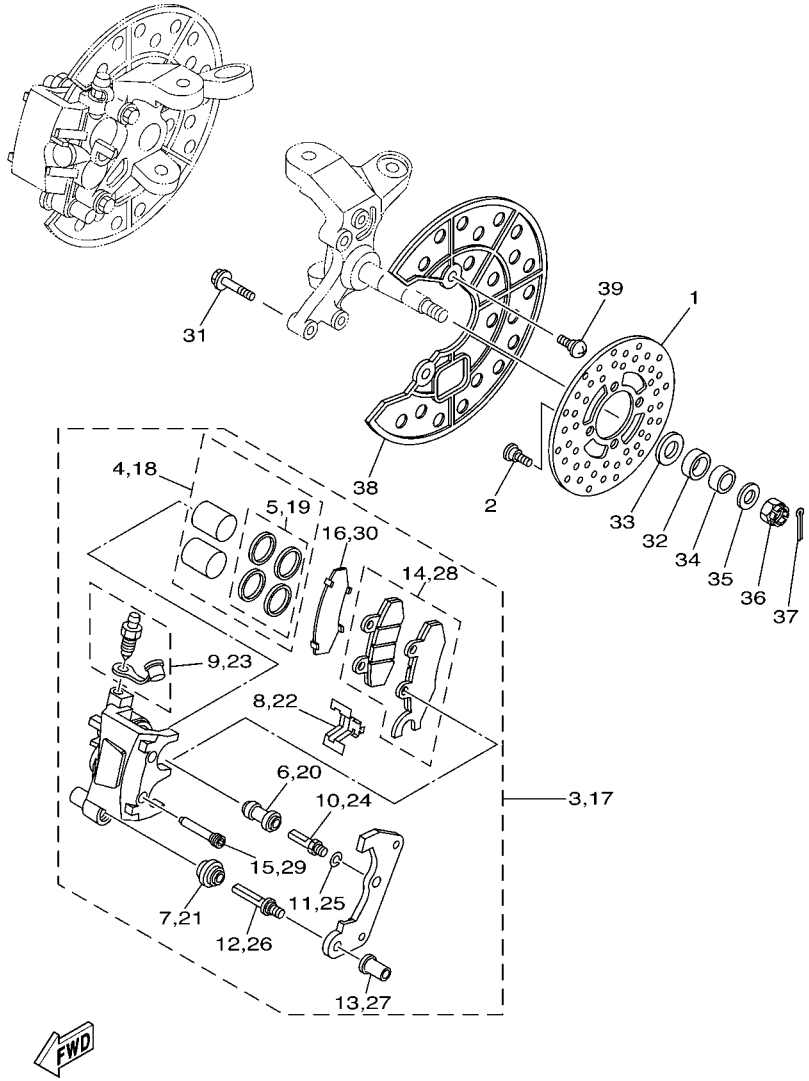


1S31100-E290

## FIG. 29 FRONT BRAKE CALIPER

| REF. NO. | PART NO. | DESCRIPTION | USA | CAN | EUR | OCE | | REMARKS |
|---|---|---|---|---|---|---|---|---|
| 1 | 3GD–2582T–10 | DISC, BRAKE (LEFT) | 2 | 2 | 2 | 2 | | |
| 2 | 90109–08082 | BOLT | 8 | 8 | 8 | 8 | | |
| 3 | 1S3–2580T–01 | CALIPER ASSY (LEFT) | 1 | 1 | 1 | 1 | | |
| 4 | 5TG–W0057–00 | .PISTON ASSY, CALIPER | 1 | 1 | 1 | 1 | | |
| 5 | 3LC–W0047–50 | ..CALIPER SEAL KIT | 1 | 1 | 1 | 1 | | |
| 6 | 1UY–25937–51 | .BOOT 2 | 1 | 1 | 1 | 1 | | |
| 7 | 3JD–25917–00 | .BOOT, CALIPER | 1 | 1 | 1 | 1 | | |
| 8 | 3JD–25919–00 | .SUPPORT, PAD | 1 | 1 | 1 | 1 | | |
| 9 | 1UY–W0048–50 | .BLEED SCREW KIT | 1 | 1 | 1 | 1 | | |
| 10 | 1UY–25926–51 | .BOLT | 1 | 1 | 1 | 1 | | |
| 11 | 1UY–25938–51 | .WASHER, SPRING | 1 | 1 | 1 | 1 | | |
| 12 | 3JD–25926–00 | .BOLT | 1 | 1 | 1 | 1 | | |
| 13 | 3JD–25961–00 | .NUT | 1 | 1 | 1 | 1 | | |
| 14 | 1S3–W0045–00 | .BRAKE PAD KIT | 1 | 1 | 1 | 1 | | LH |
| 15 | 5TG–25924–00 | .PIN, PAD | 2 | 2 | 2 | 2 | | |
| 16 | 1S3–25828–00 | .SHIM, CALIPER | 1 | 1 | 1 | 1 | | |
| 17 | 1S3–2580U–01 | CALIPER ASSY (RIGHT) | 1 | 1 | 1 | 1 | | |
| 18 | 5TG–W0057–00 | .PISTON ASSY, CALIPER | 1 | 1 | 1 | 1 | | |
| 19 | 3LC–W0047–50 | ..CALIPER SEAL KIT | 1 | 1 | 1 | 1 | | |
| 20 | 1UY–25937–51 | .BOOT 2 | 1 | 1 | 1 | 1 | | |
| 21 | 3JD–25917–00 | .BOOT, CALIPER | 1 | 1 | 1 | 1 | | |
| 22 | 3JD–25919–00 | .SUPPORT, PAD | 1 | 1 | 1 | 1 | | |
| 23 | 1UY–W0048–50 | .BLEED SCREW KIT | 1 | 1 | 1 | 1 | | |
| 24 | 1UY–25926–51 | .BOLT | 1 | 1 | 1 | 1 | | |
| 25 | 1UY–25938–51 | .WASHER, SPRING | 1 | 1 | 1 | 1 | | |
| 26 | 3JD–25926–00 | .BOLT | 1 | 1 | 1 | 1 | | |
| 27 | 3JD–25961–00 | .NUT | 1 | 1 | 1 | 1 | | |

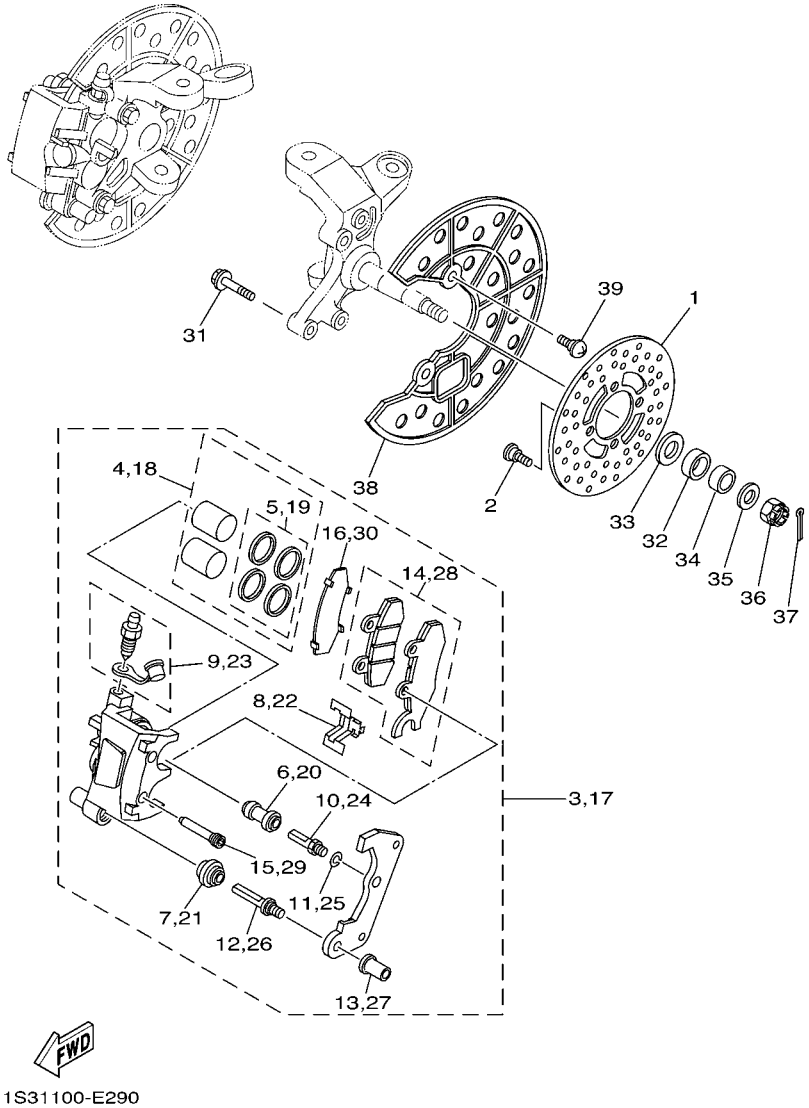


## FIG. 29 FRONT BRAKE CALIPER

| REF. NO. | PART NO. | DESCRIPTION | USA | CAN | EUR | OCE | | REMARKS |
|---|---|---|---|---|---|---|---|---|
| 28 | 1S3–W0045–10 | .BRAKE PAD KIT | 1 | 1 | 1 | 1 | | RH |
| 29 | 5TG–25924–00 | .PIN, PAD | 2 | 2 | 2 | 2 | | |
| 30 | 1S3–25828–00 | .SHIM, CALIPER | 1 | 1 | 1 | 1 | | |
| 31 | 90105–08184 | BOLT, FLANGE | 4 | 4 | 4 | 4 | | |
| 32 | 90387–20005 | COLLAR | 2 | 2 | 2 | 2 | | |
| 33 | 90201–20022 | WASHER, PLATE | 2 | 2 | 2 | 2 | | |
| 34 | 90387–150R1 | COLLAR | 2 | 2 | 2 | 2 | | |
| 35 | 90201–14586 | WASHER, PLATE | 2 | 2 | 2 | 2 | | |
| 36 | 90171–14002 | NUT, CASTLE | 2 | 2 | 2 | 2 | | |
| 37 | 91402–30025 | PIN, COTTER | 2 | 2 | 2 | 2 | | |
| 38 | 5TG–2514A–00 | RING, WHEEL 1 (LEFT) | 2 | 2 | 2 | 2 | | |
| 39 | 90154–06014 | SCREW, BINDING | 4 | 4 | 4 | 4 | | |

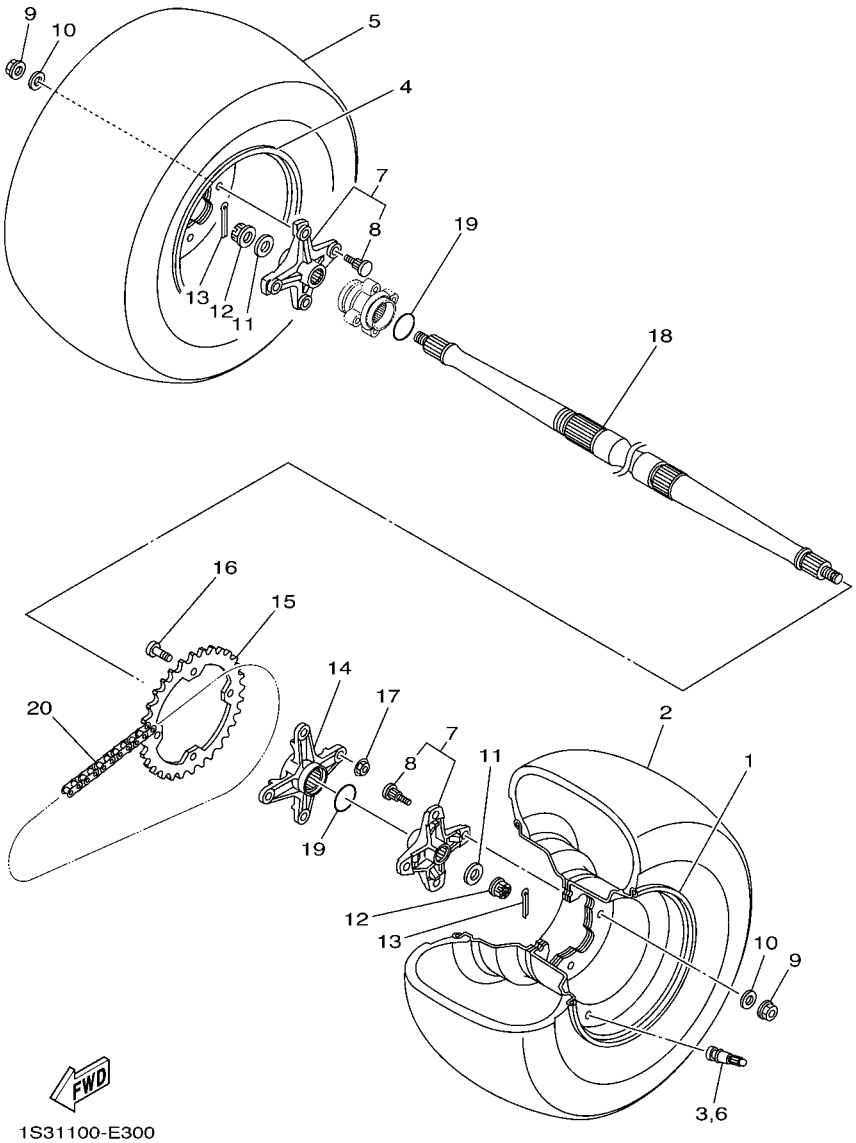


## FIG. 30 REAR WHEEL

| REF. NO. | PART NO. | DESCRIPTION | USA | CAN | EUR | OCE | | REMARKS |
|---|---|---|---|---|---|---|---|---|
| 1 | 5LP–25390–20 | REAR WHEEL COMP. | 1 | 1 | 1 | 1 | | |
| 2 | 94110–09012 | TIRE(AT20X10-R9 KT345 T/L N) | 1 | 1 | 1 | 1 | | DUNLOP |
| 3 | 93900–00022 | VALVE, RIM (TR413) | 1 | 1 | 1 | 1 | | TAIHEIYO |
| 4 | 5LP–25390–20 | REAR WHEEL COMP. | 1 | 1 | 1 | 1 | | |
| 5 | 94110–09012 | TIRE(AT20X10-R9 KT345 T/L N) | 1 | 1 | 1 | 1 | | DUNLOP |
| 6 | 93900–00022 | VALVE, RIM (TR413) | 1 | 1 | 1 | 1 | | TAIHEIYO |
| 7 | 1S3–25383–20 | COLLAR, WHEEL | 2 | 2 | 2 | 2 | | |
| 8 | 90114–10013 | .BOLT, SERRATION | 4 | 4 | 4 | 4 | | |
| 9 | 95702–10500 | NUT, WITH WASHER | 8 | 8 | 8 | 8 | | |
| 10 | 92902–10200 | WASHER | 8 | 8 | 8 | 8 | | |
| 11 | 90201–16023 | WASHER, PLATE | 2 | 2 | 2 | 2 | | |
| 12 | 90171–16002 | NUT, CASTLE | 2 | 2 | 2 | 2 | | |
| 13 | 90252–03001 | PIN, COTTER | 2 | 2 | 2 | 2 | | |
| 14 | 1S3–25386–00 | COLLAR, SPROCKET AXLE | 1 | 1 | 1 | 1 | | |
| 15 | 5TG–25438–10 | SPROCKET, DRIVEN (38T) | 1 | 1 | 1 | 1 | | |
| 16 | 90109–10013 | BOLT | 4 | 4 | 4 | 4 | | |
| 17 | 90185–10011 | NUT, SELF-LOCKING | 4 | 4 | 4 | 4 | | |
| 18 | 1S3–25381–10 | AXLE, WHEEL | 1 | 1 | 1 | 1 | | |
| 19 | 93210–36769 | O-RING | 2 | 2 | 2 | 2 | | |
| 20 | 94582–13098 | CHAIN (DID520MXV 98LE) | 1 | 1 | 1 | 1 | | |

## FIG. 31 REAR BRAKE CALIPER

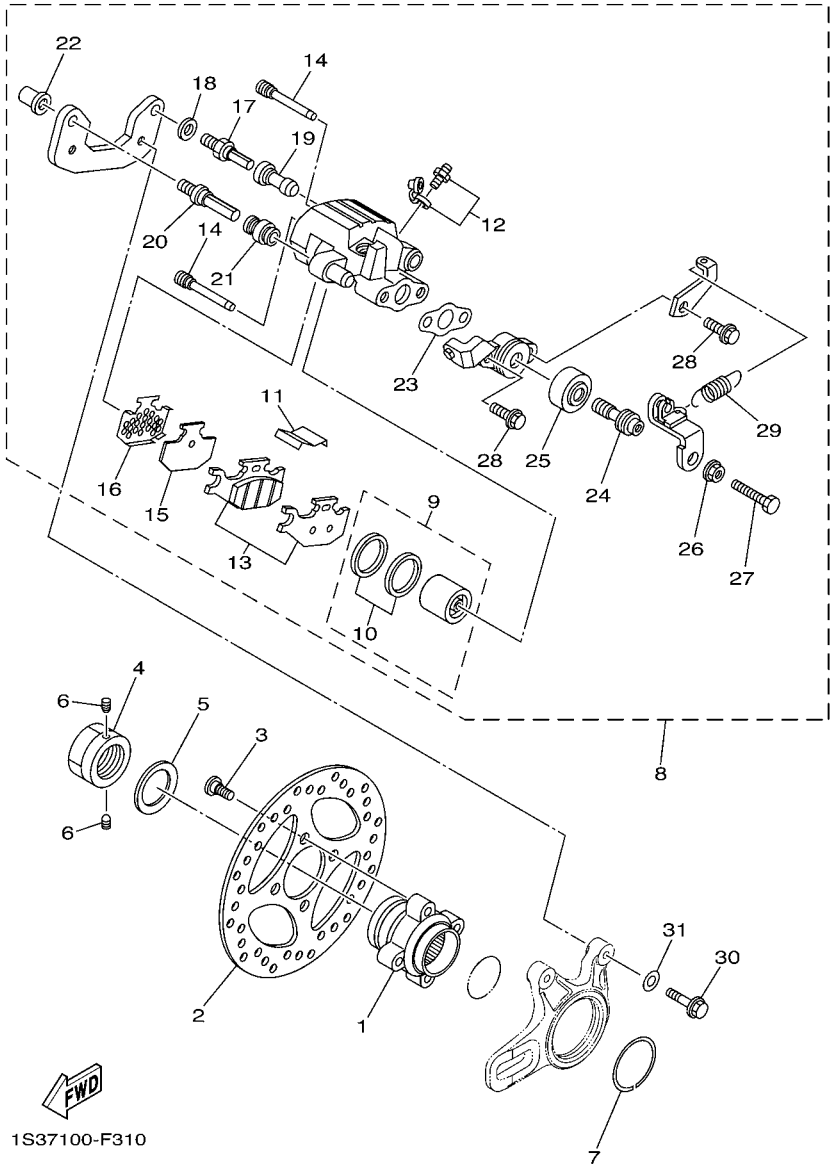


| REF. NO. | PART NO. | DESCRIPTION | USA | CAN | EUR | OCE | | REMARKS |
|---|---|---|---|---|---|---|---|---|
| 1 | 1S3–25712–00 | BRACKET, DISC | 1 | 1 | 1 | 1 | | |
| 2 | 1S3–2582W–10 | DISK, REAR BRAKE 2 | 1 | 1 | 1 | 1 | | |
| 3 | 90109–08076 | BOLT | 4 | 4 | 4 | 4 | | |
| 4 | 90179–36003 | NUT | 1 | 1 | 1 | 1 | | |
| 5 | 90208–37001 | WASHER, CONICAL SPRING | 1 | 1 | 1 | 1 | | |
| 6 | 90113–06055 | BOLT, SET | 2 | 2 | 2 | 2 | | |
| 7 | 1S3–25415–00 | CIRCLIP | 1 | 1 | 1 | 1 | | |
| 8 | 1S3–2580V–11 | CALIPER ASSY, REAR 1 | 1 | 1 | 1 | 1 | | |
| 9 | 5UG–W0057–00 | .PISTON ASSY, CALIPER | 1 | 1 | 1 | 1 | | |
| 10 | 3GD–W0047–00 | ..CALIPER SEAL KIT | 1 | 1 | 1 | 1 | | |
| 11 | 4GY–25919–50 | .SUPPORT, PAD | 1 | 1 | 1 | 1 | | |
| 12 | 1UY–W0048–50 | .BLEED SCREW KIT | 1 | 1 | 1 | 1 | | |
| 13 | 1S3–W0046–01 | .BRAKE PAD KIT 2 | 1 | 1 | 1 | 1 | | |
| 14 | 5GH–25924–00 | .PIN, PAD | 2 | 2 | 2 | 2 | | |
| 15 | 5UG–25827–00 | .SHIM, CALIPER | 1 | 1 | 1 | 1 | | |
| 16 | 5GH–25828–00 | .SHIM, CALIPER | 1 | 1 | 1 | 1 | | |
| 17 | 1UY–25926–51 | .BOLT | 1 | 1 | 1 | 1 | | |
| 18 | 1UY–25938–51 | .WASHER, SPRING | 1 | 1 | 1 | 1 | | |
| 19 | 1UY–25937–51 | .BOOT 2 | 1 | 1 | 1 | 1 | | |
| 20 | 3JD–25926–00 | .BOLT | 1 | 1 | 1 | 1 | | |
| 21 | 3JD–25917–00 | .BOOT, CALIPER | 1 | 1 | 1 | 1 | | |
| 22 | 3JD–25961–00 | .NUT | 1 | 1 | 1 | 1 | | |
| 23 | 5UG–25898–00 | .GASKET | 1 | 1 | 1 | 1 | | |
| 24 | 1S3–25978–00 | .SHAFT L | 1 | 1 | 1 | 1 | | |
| 25 | 1UY–25974–51 | .BOOT | 1 | 1 | 1 | 1 | | |
| 26 | 1S3–25973–00 | .NUT | 1 | 1 | 1 | 1 | | |
| 27 | 1S3–25972–00 | .ADJUSTBOLT | 1 | 1 | 1 | 1 | | |

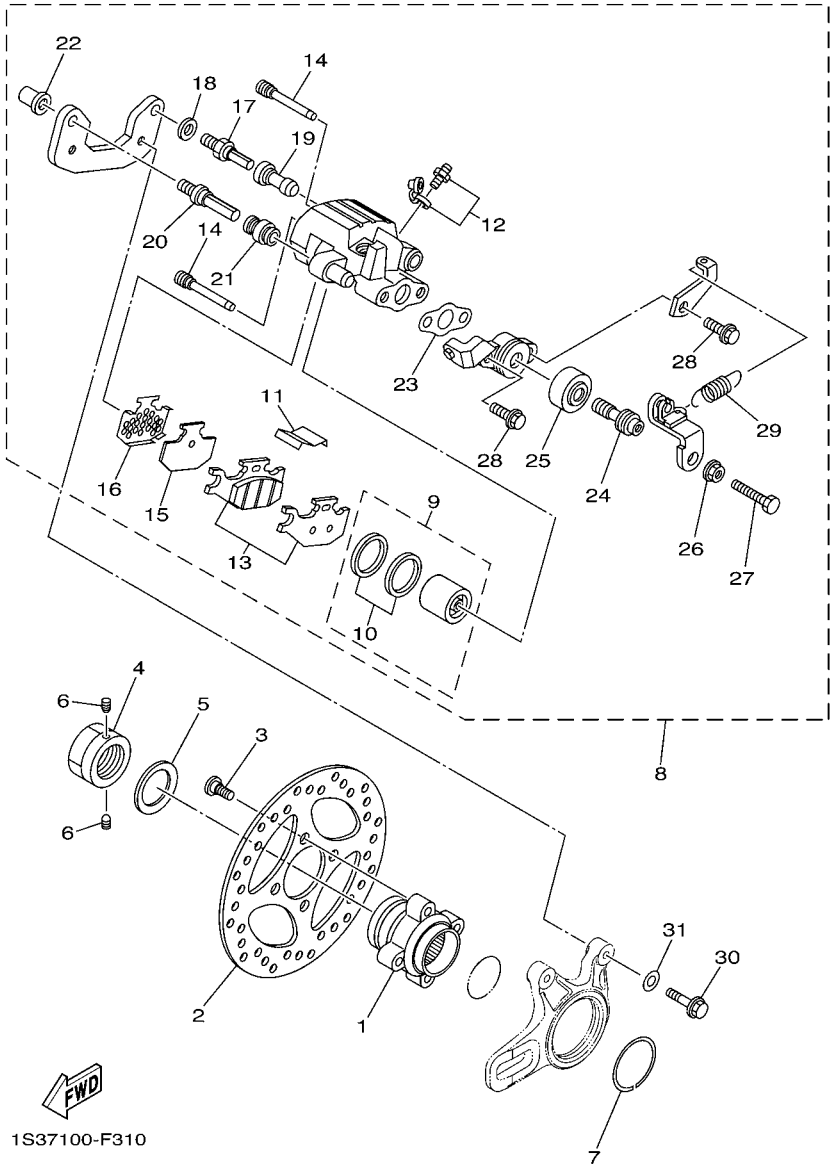


## FIG. 31 REAR BRAKE CALIPER

| REF. NO. | PART NO. | DESCRIPTION | USA | CAN | EUR | OCE | | REMARKS |
|---|---|---|---|---|---|---|---|---|
| 28 | 5UG–25833–00 | .BOLT, FITTING | 2 | 2 | 2 | 2 | | |
| 29 | 5TG–25977–50 | .SPRING, RETURN | 1 | 1 | 1 | 1 | | |
| 30 | 90105–08104 | BOLT, FLANGE | 2 | 2 | 2 | 2 | | |
| 31 | 90201–08060 | WASHER, PLATE | 2 | 2 | 2 | 2 | | |

## FIG. 32 STEERING HANDLE & CABLE

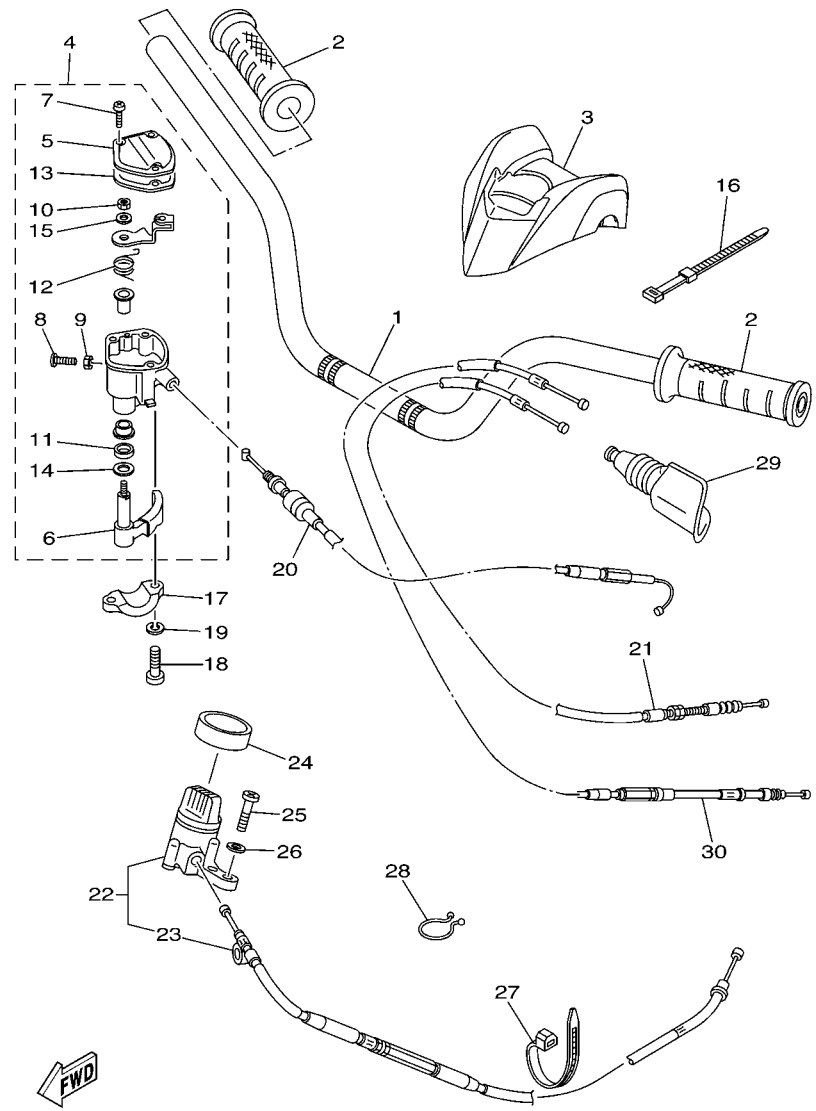


| REF. NO. | PART NO. | DESCRIPTION | USA | CAN | EUR | OCE | | REMARKS |
|---|---|---|---|---|---|---|---|---|
| 1 | 1S3–26111–10 | HANDLEBAR | 1 | 1 | 1 | 1 | | |
| 2 | 5LP–26241–00 | GRIP | 2 | 2 | 2 | 2 | | |
| 3 | 1S3–26124–00 | PROTECTOR, HANDLEBAR | 1 | 1 | 1 | 1 | | |
| 4 | 4KB–26250–20 | THROTTLE LEVER ASSY | 1 | 1 | 1 | 1 | | |
| 5 | 4KB–2628F–20 | .CAP, GEAR | 1 | 1 | 1 | 1 | | |
| 6 | 1NV–2625G–01 | .LEVER, THROTTLE | 1 | 1 | 1 | 1 | | |
| 7 | 4KB–2632G–00 | .SCREW | 3 | 3 | 3 | 3 | | |
| 8 | 4KB–26256–00 | .SCREW, GRIP END | 1 | 1 | 1 | 1 | | |
| 9 | 95607–05100 | .NUT, U | 1 | 1 | 1 | 1 | | |
| 10 | 4KB–26258–00 | .NUT, LOCK | 1 | 1 | 1 | 1 | | |
| 11 | 93104–09025 | .OIL SEAL | 1 | 1 | 1 | 1 | | |
| 12 | 1NV–26304–00 | .SPRING | 1 | 1 | 1 | 1 | | |
| 13 | 4KB–2628G–00 | .GASKET | 1 | 1 | 1 | 1 | | |
| 14 | 1NV–26129–00 | .WASHER | 1 | 1 | 1 | 1 | | |
| 15 | 1NV–26398–00 | .WASHER | 1 | 1 | 1 | 1 | | |
| 16 | 437–83936–01 | BAND, SWITCH CORD | 4 | 4 | 4 | 4 | | |
| 17 | 4V4–82913–00 | HOLDER, LEVER LOWER 1 | 1 | 1 | 1 | 1 | | |
| 18 | 98502–05020 | SCREW, PAN HEAD | 2 | 2 | 2 | 2 | | |
| 19 | 92902–05100 | WASHER, SPRING | 2 | 2 | 2 | 2 | | |
| 20 | 1S3–26311–10 | CABLE, THROTTLE 1 | 1 | 1 | 1 | 1 | | |
| 21 | 1S3–26335–00 | CABLE, CLUTCH | 1 | 1 | 1 | 1 | | |
| 22 | 1S3–26150–10 | REV. LEVER ASSY. | 1 | 1 | 1 | 1 | | |
| 23 | 1S3–2637E–10 | .CABLE, CONTROL 1 | 1 | 1 | 1 | 1 | | |
| 24 | 1S3–26113–00 | DAMPER | 1 | 1 | 1 | 1 | | |
| 25 | 98502–05018 | SCREW, PAN HEAD | 2 | 2 | 2 | 2 | | |
| 26 | 92902–05600 | WASHER, PLATE | 2 | 2 | 2 | 2 | | |
| 27 | 90464–13073 | CLAMP | 1 | 1 | 1 | 1 | | |

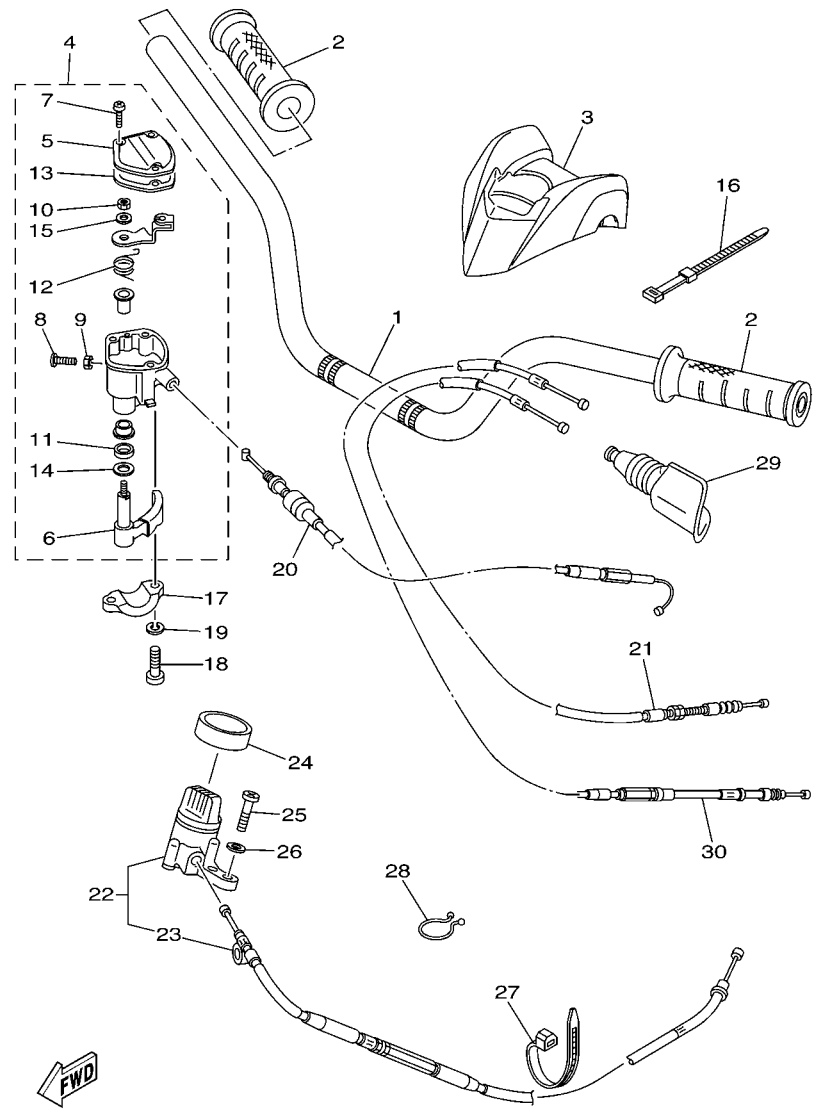


## FIG. 32 STEERING HANDLE & CABLE

| REF. NO. | PART NO. | DESCRIPTION | USA | CAN | EUR | OCE | | REMARKS |
|---|---|---|---|---|---|---|---|---|
| 28 | 90464–23041 | CLAMP | 1 | 1 | 1 | 1 | | |
| 29 | 31A–26372–00 | COVER, HANDLE LEVER 1 | 1 | 1 | 1 | 1 | | |
| 30 | 1S3–26341–00 | WIRE, BRAKE 1 | 1 | 1 | 1 | 1 | | |

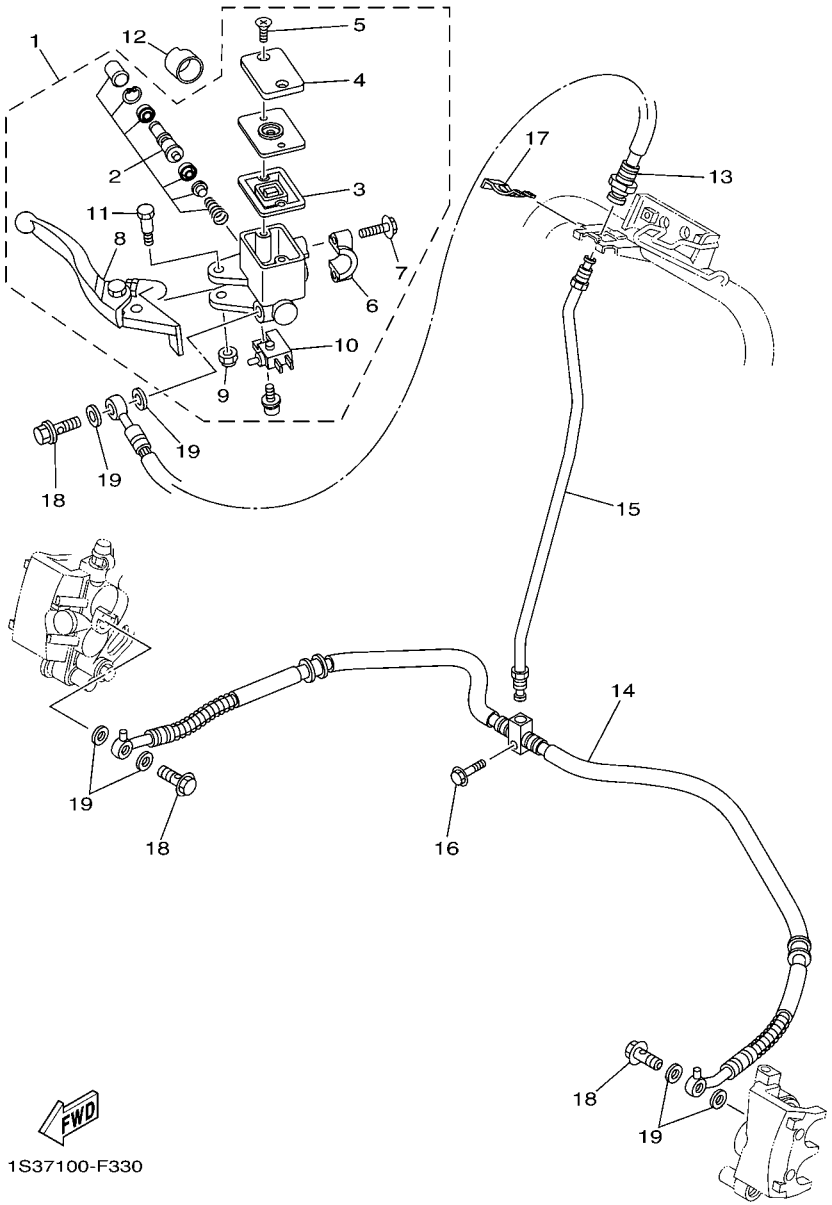


## FIG. 33 FRONT MASTER CYLINDER

| REF. NO. | PART NO. | DESCRIPTION | USA | CAN | EUR | OCE | | REMARKS |
|---|---|---|---|---|---|---|---|---|
| 1 | 5D3–2583T–00 | MASTER CYLINDER ASSY | 1 | 1 | 1 | 1 | | |
| 2 | 5D3–W0041–00 | .CYLINDER KIT, MASTER | 1 | 1 | 1 | 1 | | |
| 3 | 4TT–25854–00 | .DIAPHRAGM, RESERVOIR | 1 | 1 | 1 | 1 | | |
| 4 | 5D3–25852–00 | .CAP, RESERVOIR | 1 | 1 | 1 | 1 | | |
| 5 | 4NK–2589H–00 | .SCREW | 2 | 2 | 2 | 2 | | |
| 6 | 5LP–25867–00 | .BRACKET, MASTER CYLINDER | 1 | 1 | 1 | 1 | | |
| 7 | 5MV–25833–00 | .BOLT, FITTING | 2 | 2 | 2 | 2 | | |
| 8 | 5D3–83922–00 | .LEVER 2 | 1 | 1 | 1 | 1 | | |
| 9 | 95604–06100 | .NUT, U | 1 | 1 | 1 | 1 | | |
| 10 | 5D3–83980–00 | .FRONT STOP SWITCH ASSY | 1 | 1 | 1 | 1 | | |
| 11 | 5MV–2589F–00 | .BOLT, LEVER | 1 | 1 | 1 | 1 | | |
| 12 | 1UY–26259–00 | COLLAR | 1 | 1 | 1 | 1 | | |
| 13 | 1S3–25872–10 | HOSE, BRAKE 1 | 1 | 1 | 1 | 1 | | |
| 14 | 5TG–25873–10 | HOSE, BRAKE 2 | 1 | 1 | 1 | 1 | | |
| 15 | 1S3–25871–10 | PIPE, BRAKE | 1 | 1 | 1 | 1 | | |
| 16 | 95822–06025 | BOLT, FLANGE | 1 | 1 | 1 | 1 | | |
| 17 | 2GU–25866–00 | CIRCLIP | 1 | 1 | 1 | 1 | | |
| 18 | 90401–10015 | BOLT, UNION | 3 | 3 | 3 | 3 | | |
| 19 | 90201–10118 | WASHER, PLATE | 6 | 6 | 6 | 6 | | |

## FIG. 34 STAND & FOOTREST

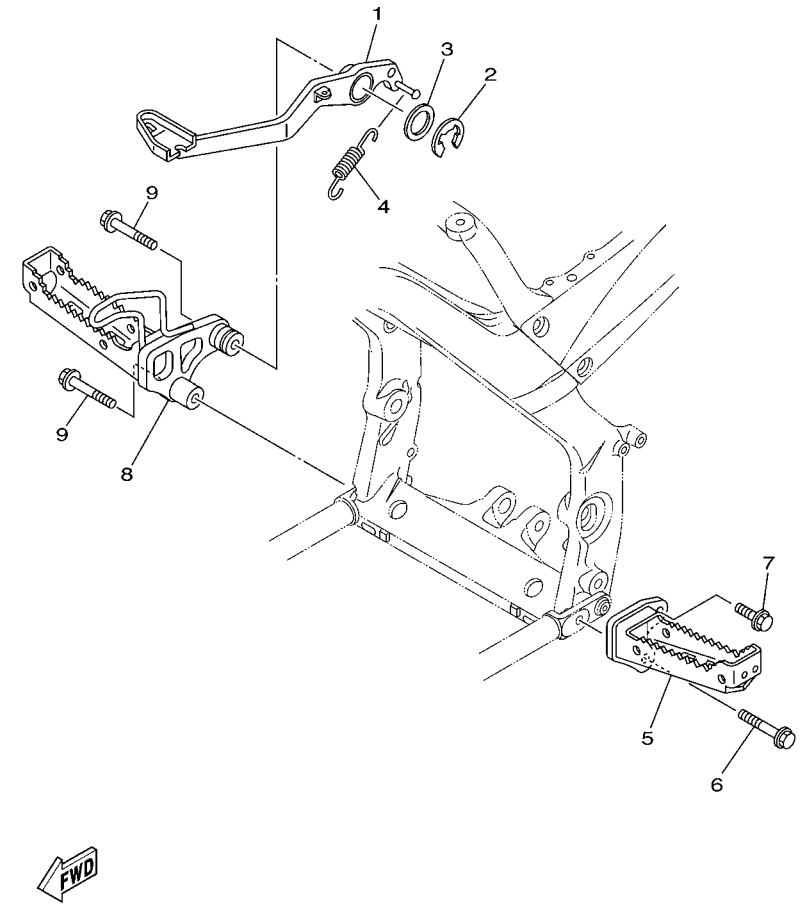


| REF. NO. | PART NO. | DESCRIPTION | USA | CAN | EUR | OCE | | REMARKS |
|---|---|---|---|---|---|---|---|---|
| 1 | 1S3–27211–10 | PEDAL, BRAKE | 1 | 1 | 1 | 1 | | |
| 2 | 93430–23054 | CIRCLIP | 1 | 1 | 1 | 1 | | |
| 3 | 90201–266F6 | WASHER, PLATE | 1 | 1 | 1 | 1 | | |
| 4 | 90506–20380 | SPRING, TENSION | 1 | 1 | 1 | 1 | | |
| 5 | 1S3–27411–10 | FOOTREST 1 | 1 | 1 | 1 | 1 | | |
| 6 | 90105–10294 | BOLT, FLANGE | 1 | 1 | 1 | 1 | | |
| 7 | 95812–10030 | BOLT, FLANGE | 1 | 1 | 1 | 1 | | |
| 8 | 1S3–27421–10 | FOOTREST 2 | 1 | 1 | 1 | 1 | | |
| 9 | 90105–10294 | BOLT, FLANGE | 2 | 2 | 2 | 2 | | |

## FIG. 35 REAR MASTER CYLINDER

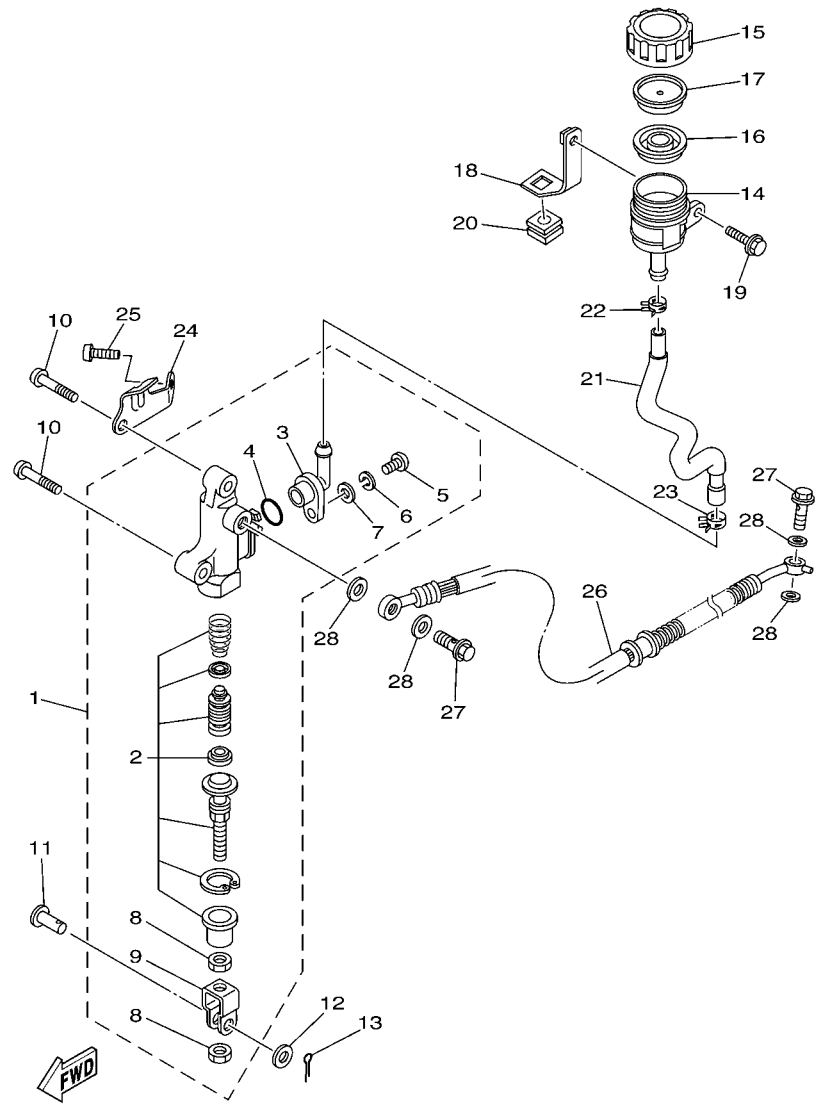


| REF. NO. | PART NO. | DESCRIPTION | USA | CAN | EUR | OCE | | REMARKS |
|---|---|---|---|---|---|---|---|---|
| 1 | 1S3–2580E–00 | REAR MASTER CYLINDER ASSY | 1 | 1 | 1 | 1 | | |
| 2 | 1S3–W0042–50 | .CYLINDER KIT, MASTER | 1 | 1 | 1 | 1 | | |
| 3 | 1AE–2582A–00 | .JOINT | 1 | 1 | 1 | 1 | | |
| 4 | 93210–15620 | .O-RING | 1 | 1 | 1 | 1 | | |
| 5 | 98506–04012 | .SCREW, PAN HEAD | 1 | 1 | 1 | 1 | | |
| 6 | 92906–04100 | .WASHER, SPRING | 1 | 1 | 1 | 1 | | |
| 7 | 92906–04600 | .WASHER, PLATE | 1 | 1 | 1 | 1 | | |
| 8 | 4SS–27218–00 | .NUT | 2 | 2 | 2 | 2 | | |
| 9 | 2YK–27222–00 | .JOINT | 1 | 1 | 1 | 1 | | |
| 10 | 92012–08035 | BOLT, BUTTON HEAD | 2 | 2 | 2 | 2 | | |
| 11 | 90240–08124 | PIN, CLEVIS | 1 | 1 | 1 | 1 | | |
| 12 | 90201–08083 | WASHER, PLATE | 1 | 1 | 1 | 1 | | |
| 13 | 91401–16012 | PIN, COTTER | 1 | 1 | 1 | 1 | | |
| 14 | 5JJ–25894–00 | TANK, RESERVOIR | 1 | 1 | 1 | 1 | | |
| 15 | 3XP–25852–50 | CAP, RESERVOIR | 1 | 1 | 1 | 1 | | |
| 16 | 2VN–25854–00 | DIAPHRAGM, RESERVOIR | 1 | 1 | 1 | 1 | | |
| 17 | 2VN–25855–00 | BUSH,DIAPHRAGM | 1 | 1 | 1 | 1 | | |
| 18 | 1S3–26292–00 | STAY | 1 | 1 | 1 | 1 | | |
| 19 | 90119–06137 | BOLT, WITH WASHER | 1 | 1 | 1 | 1 | | |
| 20 | 90480–15009 | GROMMET | 1 | 1 | 1 | 1 | | |
| 21 | 1S3–25895–00 | HOSE, RESERVOIR | 1 | 1 | 1 | 1 | | |
| 22 | 90467–11044 | CLIP | 1 | 1 | 1 | 1 | | |
| 23 | 90467–14057 | CLIP | 1 | 1 | 1 | 1 | | |
| 24 | 1S3–27453–00 | COVER 1 | 1 | 1 | 1 | 1 | | |
| 25 | 92012–08016 | BOLT, BUTTON HEAD | 1 | 1 | 1 | 1 | | |
| 26 | 1S3–25874–10 | HOSE, BRAKE | 1 | 1 | 1 | 1 | | |
| 27 | 90401–10015 | BOLT, UNION | 2 | 2 | 2 | 2 | | |

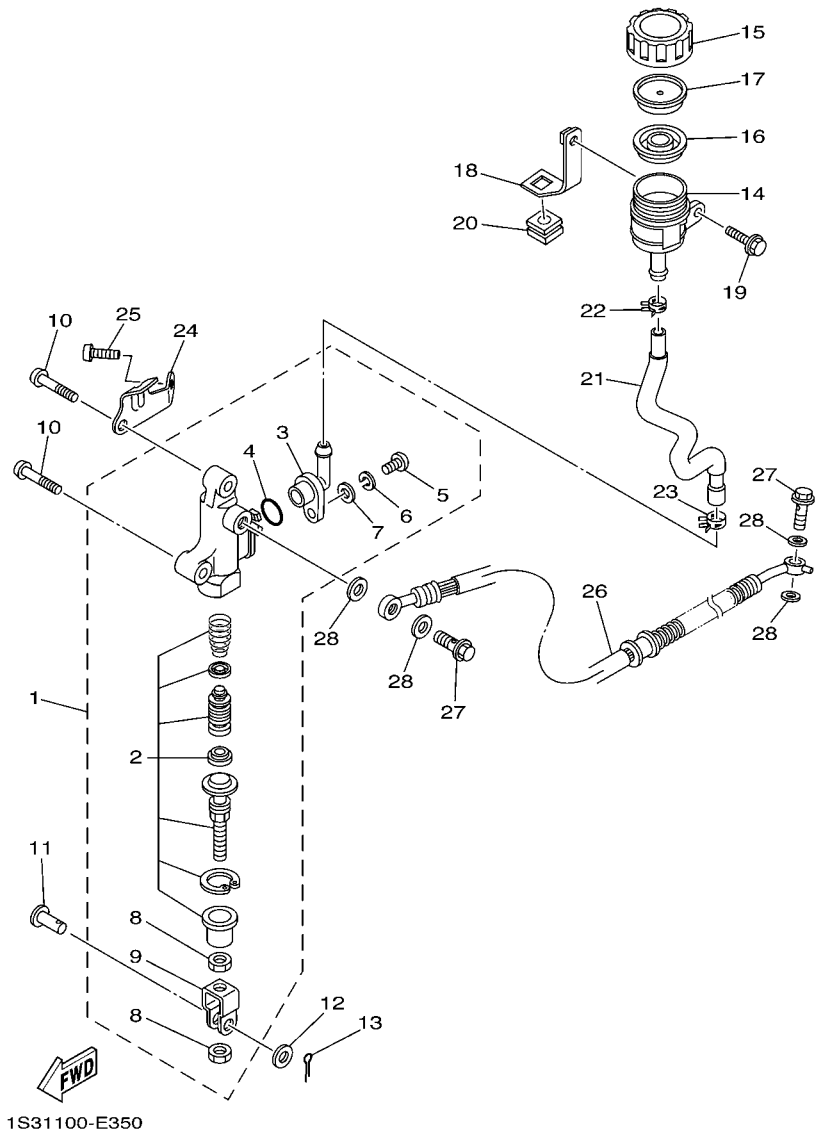


## FIG. 35 REAR MASTER CYLINDER

| REF. NO. | PART NO. | DESCRIPTION | USA | CAN | EUR | OCE | | REMARKS |
|---|---|---|---|---|---|---|---|---|
| 28 | 90201–10118 | WASHER, PLATE | 4 | 4 | 4 | 4 | | |

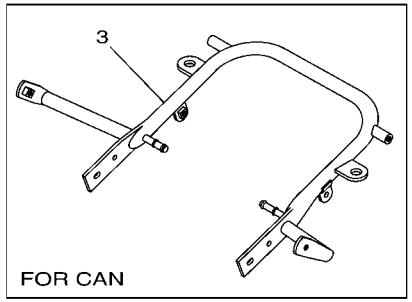


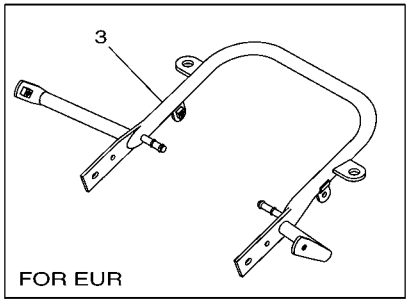


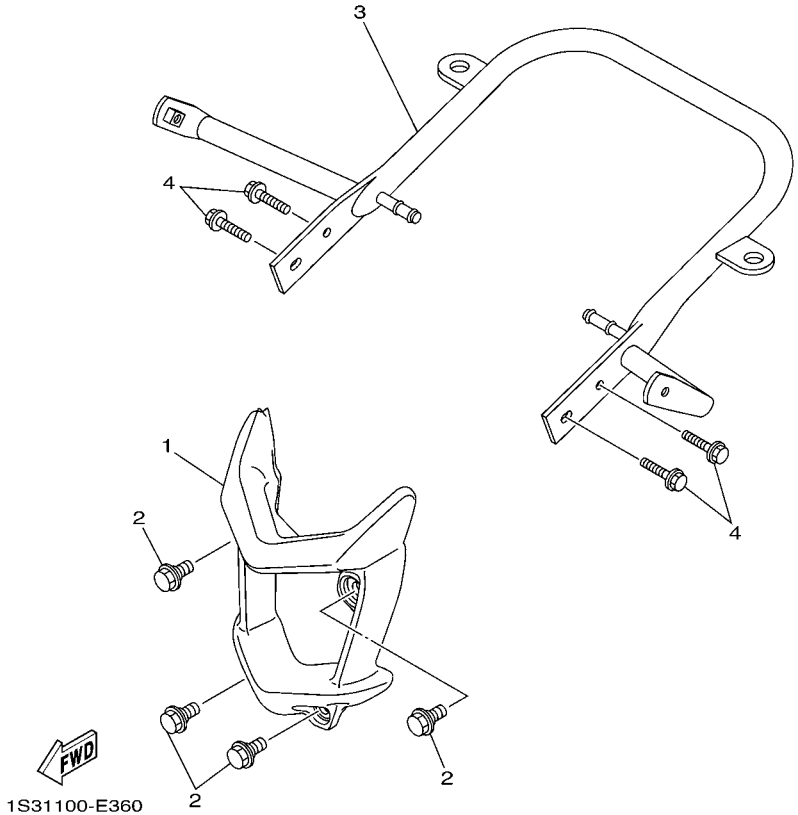


## FIG. 36 GUARD

| REF. NO. | PART NO. | DESCRIPTION | USA | CAN | EUR | OCE | | REMARKS |
|---|---|---|---|---|---|---|---|---|
| 1 | 1S3–2845N–00 | BAR, CARRY FRONT | 1 | 1 | 1 | 1 | | |
| 2 | 90109–08100 | BOLT | 4 | 4 | 4 | 4 | | |
| 3 | 1S3–2845R–00 | BAR, CARRY REAR | 1 | | | 1 | | |
| | 1S3–2845R–10 | BAR, CARRY REAR | | 1 | | | | |
| | 1S3–2845R–20 | BAR, CARRY REAR | | | 1 | | | |
| 4 | 90105–08142 | BOLT, FLANGE | 4 | 4 | 4 | 4 | | |

## FIG. 37 GENERATOR

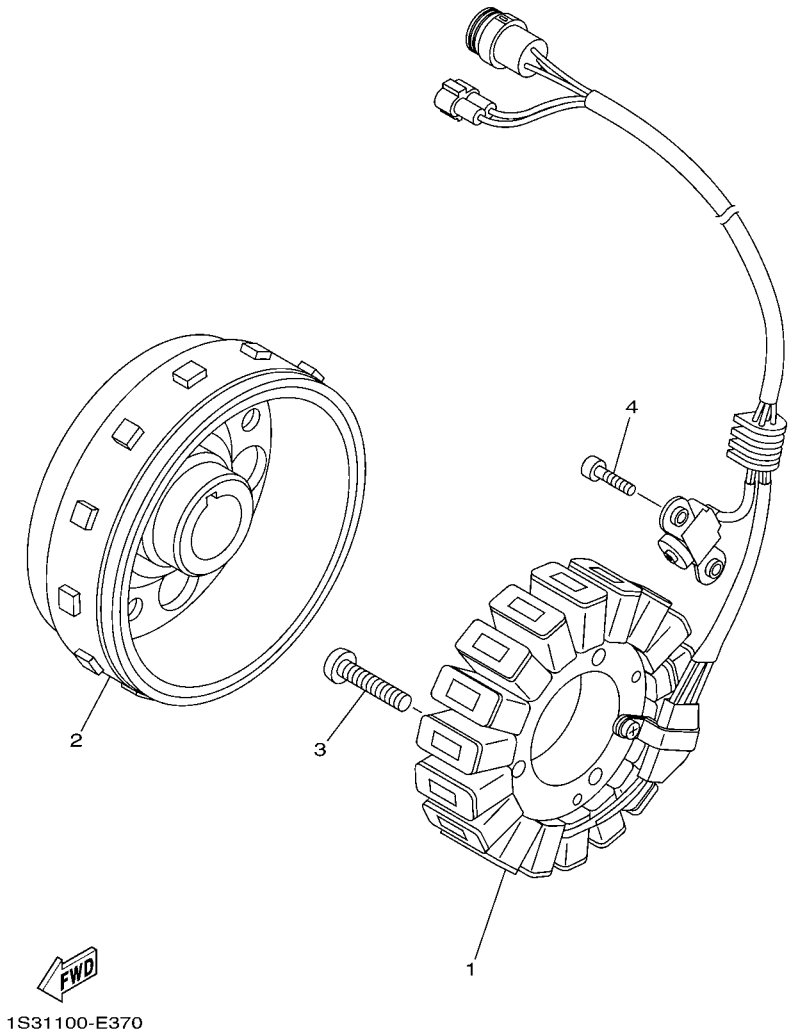


| REF. NO. | PART NO. | DESCRIPTION | USA | CAN | EUR | OCE | | REMARKS |
|---|---|---|---|---|---|---|---|---|
| 1 | 1S3–81410–00 | STATOR ASSY | 1 | 1 | 1 | 1 | | |
| 2 | 1S3–81450–00 | ROTOR ASSY | 1 | 1 | 1 | 1 | | |
| 3 | 92012–06030 | BOLT, BUTTON HEAD | 3 | 3 | 3 | 3 | | |
| 4 | 90110–05031 | BOLT, HEXAGON SOCKET HEAD | 2 | 2 | 2 | 2 | | |

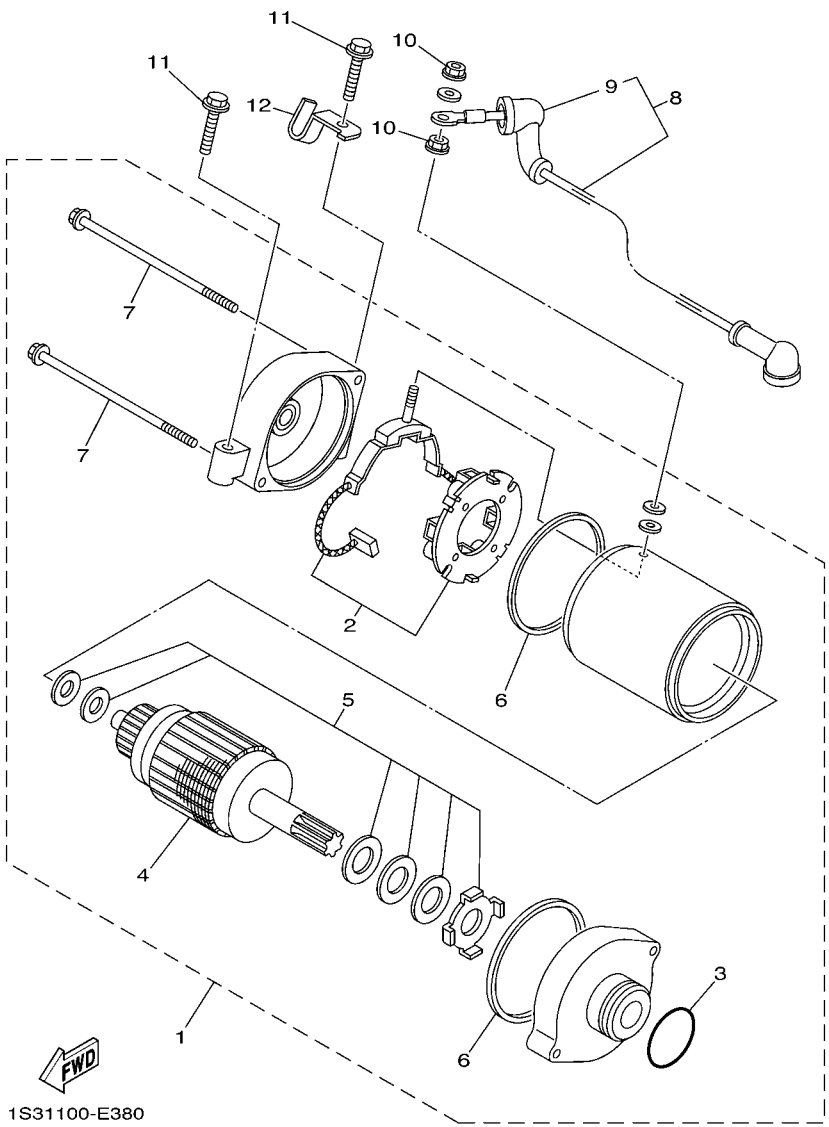


## FIG. 38 STARTING MOTOR

| REF. NO. | PART NO. | DESCRIPTION | USA | CAN | EUR | OCE | | REMARKS |
|---|---|---|---|---|---|---|---|---|
| 1 | 1S3–81890–00 | MOTOR ASSY | 1 | 1 | 1 | 1 | | |
| 2 | 3AJ–81801–00 | .BRUSH SET | 1 | 1 | 1 | 1 | | |
| 3 | 1FK–81847–00 | .O-RING | 1 | 1 | 1 | 1 | | |
| 4 | 4NK–81850–00 | .ARMATURE ASSY | 1 | 1 | 1 | 1 | | |
| 5 | 3KS–81809–00 | .WASHER KIT | 1 | 1 | 1 | 1 | | |
| 6 | 11H–81844–00 | .GASKET | 2 | 2 | 2 | 2 | | |
| 7 | 3AJ–81826–00 | .BOLT | 2 | 2 | 2 | 2 | | |
| 8 | 1S3–81815–00 | CORD, STARTER MOTOR | 1 | 1 | 1 | 1 | | |
| 9 | 4G0–81871–00 | .CAP | 1 | 1 | 1 | 1 | | |
| 10 | 4XV–8182A–00 | NUT | 2 | 2 | 2 | 2 | | |
| 11 | 95812–06030 | BOLT, FLANGE | 2 | 2 | 2 | 2 | | |
| 12 | 1S3–15484–00 | CLAMP 2 | 1 | 1 | 1 | 1 | | |

## FIG. 39 HEADLIGHT

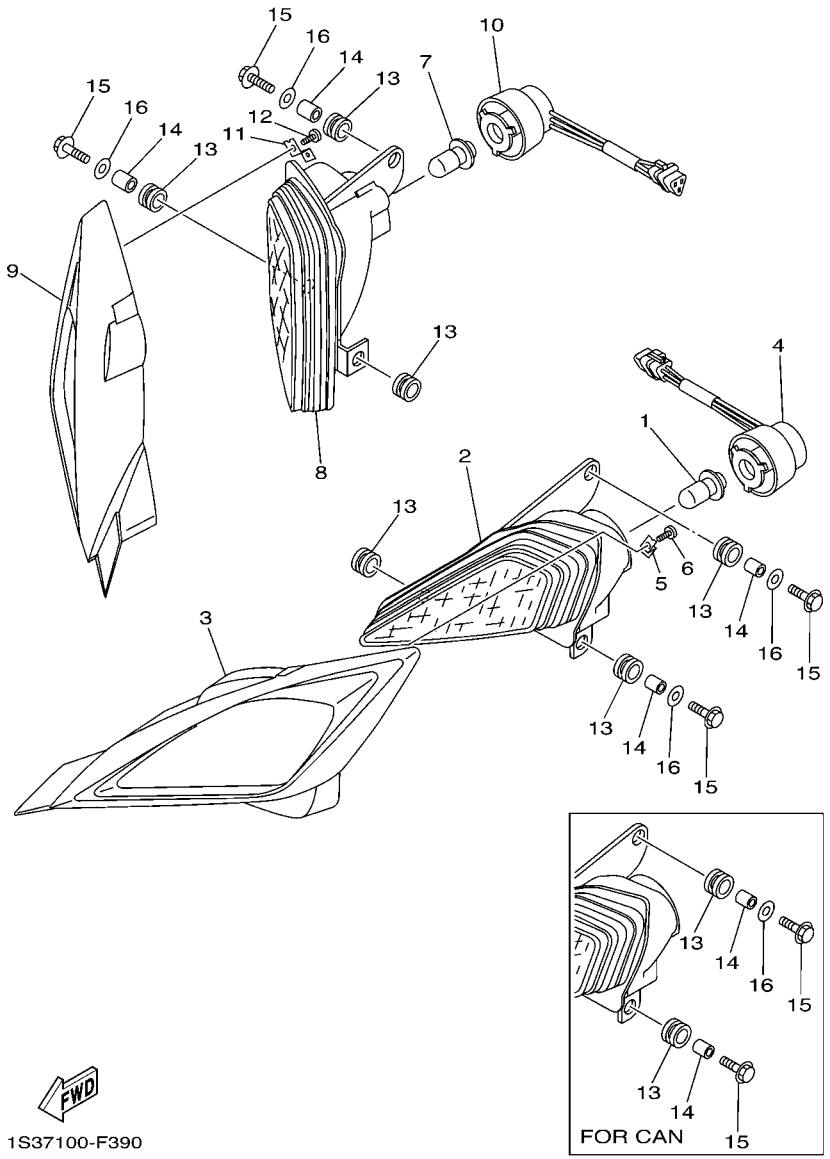


| REF. NO. | PART NO. | DESCRIPTION | USA | CAN | EUR | OCE | | REMARKS |
|---|---|---|---|---|---|---|---|---|
| 1 | 4KB–84314–01 | BULB (12V-30/30W) | 1 | 1 | 1 | 1 | | |
| 2 | 5TG–84110–12 | HEADLIGHT UNIT ASSY | 1 | 1 | 1 | 1 | | |
| 3 | 1S3–84165–00 | RIM, HEADLIGHT COVER 1 | 1 | 1 | 1 | 1 | | |
| 4 | 5TG–84140–01 | SOCKET CORD ASSY | 1 | 1 | 1 | 1 | | |
| 5 | 1S3–8413J–00 | PLATE, FITTING | 1 | 1 | 1 | 1 | | |
| 6 | 97707–30510 | SCREW, TAPPING | 1 | 1 | 1 | 1 | | |
| 7 | 4KB–84314–01 | BULB (12V-30/30W) | 1 | 1 | 1 | 1 | | |
| 8 | 5TG–84310–12 | HEADLIGHT UNIT ASSY | 1 | 1 | 1 | 1 | | |
| 9 | 1S3–84166–00 | RIM, HEADLIGHT COVER 2 | 1 | 1 | 1 | 1 | | |
| 10 | 5TG–84340–01 | SOCKET CORD ASSY 1 | 1 | 1 | 1 | 1 | | |
| 11 | 1S3–8413J–00 | PLATE, FITTING | 1 | 1 | 1 | 1 | | |
| 12 | 97707–30510 | SCREW, TAPPING | 1 | 1 | 1 | 1 | | |
| 13 | 90480–14102 | GROMMET | 6 | 6 | 6 | 6 | | |
| 14 | 90387–07598 | COLLAR | 4 | 4 | 4 | 4 | | |
| 15 | 95812–06030 | BOLT, FLANGE | 4 | 4 | 4 | 4 | | |
| 16 | 90201–06078 | WASHER, PLATE | 4 | 2 | 4 | 4 | | |

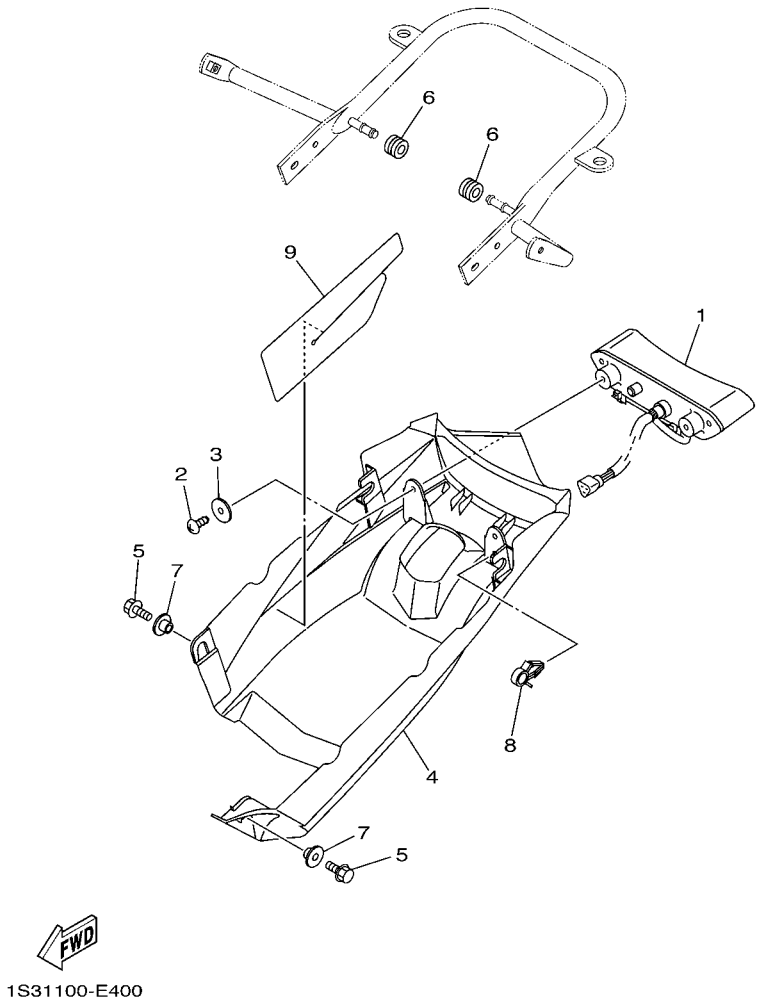


## FIG. 40 TAILLIGHT

| REF. NO. | PART NO. | DESCRIPTION | USA | CAN | EUR | OCE | | REMARKS |
|---|---|---|---|---|---|---|---|---|
| 1 | 1S3–84710–00 | TAILLIGHT UNIT ASSY | 1 | | | 1 | | |
| 2 | 97702–50016 | SCREW, TAPPING | 2 | | | 2 | | |
| 3 | 90201–05025 | WASHER, PLATE | 2 | | | 2 | | |
| 4 | 1S3–84716–20 | COVER, TAILLIGHT | 1 | | | 1 | | |
| 5 | 95802–06010 | BOLT, FLANGE | 2 | | | 2 | | |
| 6 | 90480–14101 | GROMMET | 2 | | | 2 | | |
| 7 | 90387–06153 | COLLAR | 2 | | | 2 | | |
| 8 | 90464–15157 | CLAMP | 1 | | | 1 | | |
| 9 | 1S3–84736–00 | DAMPER, TAIL 1 | 1 | | | 1 | | |

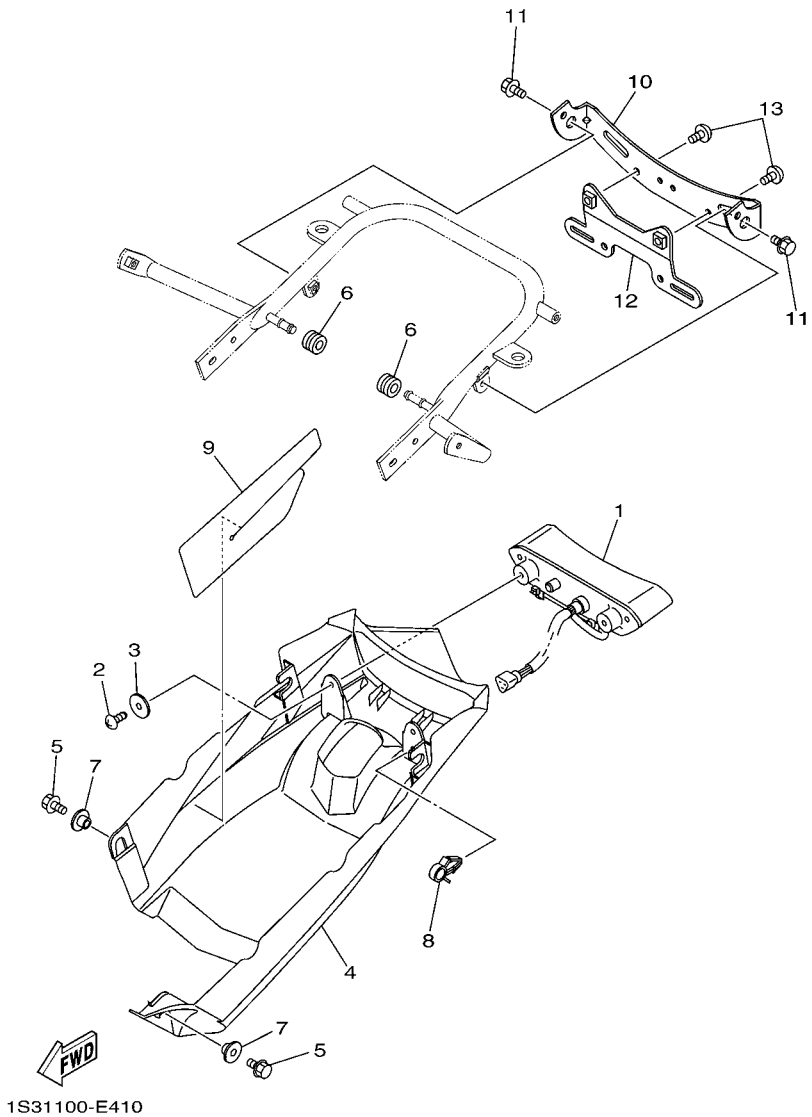


## FIG. 41 TAILLIGHT 2

| REF. NO. | PART NO. | DESCRIPTION | USA | CAN | EUR | OCE | | REMARKS |
|---|---|---|---|---|---|---|---|---|
| 1 | 1S3–84710–00 | TAILLIGHT UNIT ASSY | | 1 | 1 | | | |
| 2 | 97702–50016 | SCREW, TAPPING | | 2 | 2 | | | |
| 3 | 90201–05025 | WASHER, PLATE | | 2 | 2 | | | |
| 4 | 1S3–84716–20 | COVER, TAILLIGHT | | 1 | 1 | | | |
| 5 | 95802–06010 | BOLT, FLANGE | | 2 | 2 | | | |
| 6 | 90480–14101 | GROMMET | | 2 | 2 | | | |
| 7 | 90387–06153 | COLLAR | | 2 | 2 | | | |
| 8 | 90464–15157 | CLAMP | | 1 | 1 | | | |
| 9 | 1S3–84736–00 | DAMPER, TAIL 1 | | 1 | 1 | | | |
| 10 | 1S3–84703–10 | BRACKET | | 1 | 1 | | | |
| 11 | 95802–06010 | BOLT, FLANGE | | 2 | 2 | | | |
| 12 | 1S3–84751–10 | BRACKET, LICENSE | | 1 | | | | |
| 13 | 92012–06010 | BOLT, BUTTON HEAD | | 2 | | | | |

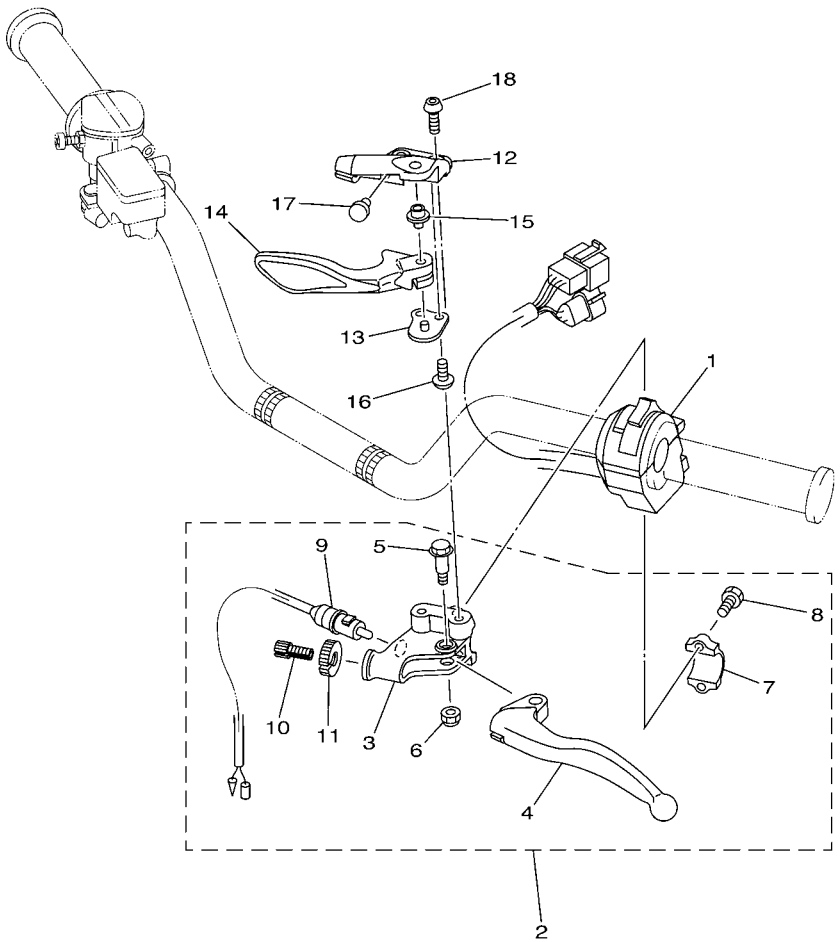

1S31100-E420

## FIG. 42 HANDLE SWITCH & LEVER

| REF. NO. | PART NO. | DESCRIPTION | USA | CAN | EUR | OCE | | REMARKS |
|---|---|---|---|---|---|---|---|---|
| 1 | 1S3–83973–00 | SWITCH, HANDLE 3 | 1 | 1 | 1 | 1 | | |
| 2 | 5YT–82910–10 | LEVER HOLDER ASSY (LEFT) | 1 | 1 | 1 | 1 | | |
| 3 | 5YT–82911–10 | .HOLDER, LEVER 1 | 1 | 1 | 1 | 1 | | |
| 4 | 2HT–83912–00 | .LEVER 1 | 1 | 1 | 1 | 1 | | |
| 5 | 90109–06798 | .BOLT | 1 | 1 | 1 | 1 | | |
| 6 | 95602–06100 | .NUT, U | 1 | 1 | 1 | 1 | | |
| 7 | 5TG–82913–00 | .HOLDER, LEVER LOWER 1 | 1 | 1 | 1 | 1 | | |
| 8 | 97002–05016 | .BOLT | 2 | 2 | 2 | 2 | | |
| 9 | 5KM–82917–00 | .SWITCH | 1 | 1 | 1 | 1 | | |
| 10 | 90123–08046 | .BOLT | 1 | 1 | 1 | 1 | | |
| 11 | 90179–08148 | .NUT | 1 | 1 | 1 | 1 | | |
| 12 | 1S3–25727–00 | BRACKET, LEVER | 1 | 1 | 1 | 1 | | |
| 13 | 5D3–25689–00 | PLATE, GUIDE | 1 | 1 | 1 | 1 | | |
| 14 | 1S3–25726–00 | LEVER, BRAKE | 1 | 1 | 1 | 1 | | |
| 15 | 5TG–83923–00 | COLLAR, LEVER 2 | 1 | 1 | 1 | 1 | | |
| 16 | 92012–06012 | BOLT, BUTTON HEAD | 2 | 2 | 2 | 2 | | |
| 17 | 90338–07007 | PLUG | 1 | 1 | 1 | 1 | | |
| 18 | 92014–06016 | BOLT, BUTTON HEAD | 2 | 2 | 2 | 2 | | |

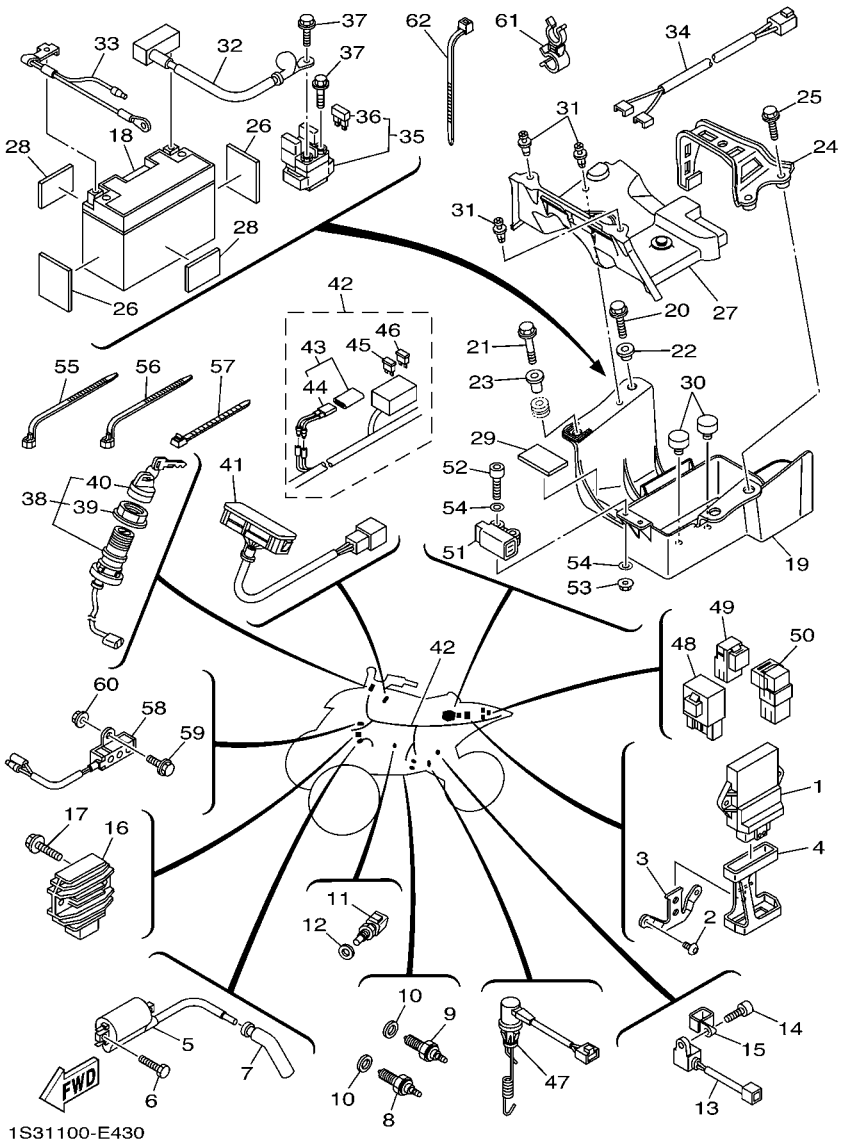


## FIG. 43 ELECTRICAL 1

| REF. NO. | PART NO. | DESCRIPTION | USA | CAN | EUR | OCE | | REMARKS |
|---|---|---|---|---|---|---|---|---|
| 1 | 1S3–8591A–00 | ENGINE CONTROL UNIT ASSY | 1 | 1 | 1 | 1 | | |
| 2 | 92012–06010 | BOLT, BUTTON HEAD | 2 | 2 | 2 | 2 | | |
| 3 | 1S3–21274–00 | BRACKET, C.D.I. UNIT | 1 | 1 | 1 | 1 | | |
| 4 | 1S3–85546–00 | BAND | 1 | 1 | 1 | 1 | | |
| 5 | 3TB–82310–00 | IGNITION COIL ASSY | 1 | 1 | 1 | 1 | | |
| 6 | 97002–05020 | BOLT | 2 | 2 | 2 | 2 | | |
| 7 | 5VK–82370–00 | PLUG CAP ASSY | 1 | 1 | 1 | 1 | | |
| 8 | 5LP–82540–01 | NEUTRAL SWITCH ASSY | 1 | 1 | 1 | 1 | | |
| 9 | 3GB–82540–01 | NEUTRAL SWITCH ASSY | 1 | 1 | 1 | 1 | | |
| 10 | 90430–10148 | GASKET | 2 | 2 | 2 | 2 | | |
| 11 | 5PS–85790–00 | THERMOSENSOR ASSY | 1 | 1 | 1 | 1 | | |
| 12 | 90430–12202 | GASKET | 1 | 1 | 1 | 1 | | |
| 13 | 1S3–83755–00 | SENSOR, SPEED | 1 | 1 | 1 | 1 | | |
| 14 | 91312–06016 | BOLT | 1 | 1 | 1 | 1 | | |
| 15 | 90461–10004 | CLAMP | 1 | 1 | 1 | 1 | | |
| 16 | 5BN–81960–00 | RECTIFIER & REGULATOR ASSY | 1 | 1 | 1 | 1 | | |
| 17 | 95802–06025 | BOLT, FLANGE | 2 | 2 | 2 | 2 | | |
| 18 | 5GJ–82100–01 | BATTERY ASSY (GS GT9B-4) | 1 | 1 | 1 | 1 | | |
| 19 | 1S3–8212B–00 | BOX, BATTERY 1 | 1 | 1 | 1 | 1 | | |
| 20 | 90105–06084 | BOLT, FLANGE | 1 | 1 | 1 | 1 | | |
| 21 | 95802–06030 | BOLT, FLANGE | 1 | 1 | 1 | 1 | | |
| 22 | 90387–06153 | COLLAR | 1 | 1 | 1 | 1 | | |
| 23 | 90387–06168 | COLLAR | 1 | 1 | 1 | 1 | | |
| 24 | 1S3–82128–00 | BRACKET, BATTERY | 1 | 1 | 1 | 1 | | |
| 25 | 95802–06020 | BOLT, FLANGE | 2 | 2 | 2 | 2 | | |
| 26 | 1S3–82123–00 | SEAT, BATTERY | 2 | 2 | 2 | 2 | | |
| 27 | 1S3–82129–00 | COVER, BATTERY | 1 | 1 | 1 | 1 | | |

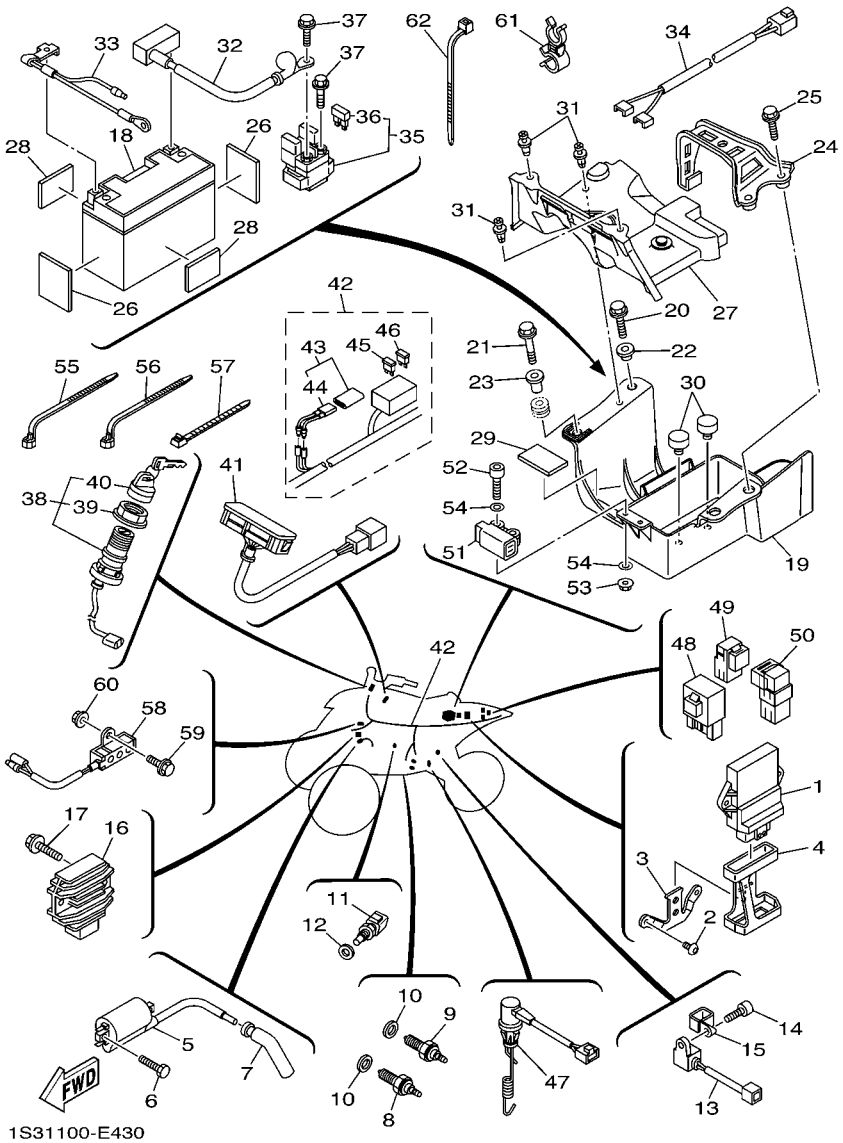


## FIG. 43 ELECTRICAL 1

| REF. NO. | PART NO. | DESCRIPTION | USA | CAN | EUR | OCE | | REMARKS |
|---|---|---|---|---|---|---|---|---|
| 28 | 1S3–82122–00 | SEAT, BATTERY | 2 | 2 | 2 | 2 | | |
| 29 | 22F–2139X–00 | DAMPER | 1 | 1 | 1 | 1 | | |
| 30 | 5TG–82121–10 | PAD, BATTERY | 2 | 2 | 2 | 2 | | |
| 31 | 90269–06002 | RIVET | 3 | 3 | 3 | 3 | | |
| 32 | 1S3–82115–00 | WIRE, PLUS LEAD | 1 | 1 | 1 | 1 | | |
| 33 | 1S3–82116–10 | WIRE, MINUS LEAD | 1 | 1 | 1 | 1 | | |
| 34 | 1S3–82541–00 | WIRE, LEAD | 1 | 1 | 1 | 1 | | |
| 35 | 1S3–81940–00 | STARTER RELAY ASSY | 1 | 1 | 1 | 1 | | |
| 36 | 2GH–82151–00 | .FUSE (20A-BL) | 2 | 2 | 2 | 2 | | |
| 37 | 95022–06008 | BOLT, FLANGE | 2 | 2 | 2 | 2 | | |
| 38 | 5LP–82510–00 | MAIN SWITCH ASSY | 1 | 1 | 1 | 1 | | |
| 39 | 3HN–82569–00 | .NUT, MAIN SWITCH | 1 | 1 | 1 | 1 | | |
| 40 | 3HN–82579–00 | .CAP, KEY | 1 | 1 | 1 | 1 | | |
| 41 | 1S3–83530–00 | PILOT LIGHT ASSY | 1 | 1 | 1 | 1 | | |
| 42 | 1S3–82590–10 | WIRE HARNESS ASSY | 1 | 1 | 1 | 1 | | |
| 43 | 5GT–82180–00 | .CIRCUIT BREAKER ASSY | 1 | 1 | 1 | 1 | | |
| 44 | 5GT–82560–00 | ..THERMO SWITCH ASSY | 1 | 1 | 1 | 1 | | |
| 45 | 5JJ–82151–10 | .FUSE (15A-BL) | 2 | 2 | 2 | 2 | | |
| 46 | 5JJ–82151–30 | .FUSE (10A-BL) | 4 | 4 | 4 | 4 | | |
| 47 | 1S3–82530–10 | STOP SWITCH ASSY | 1 | 1 | 1 | 1 | | |
| 48 | 5VK–81950–30 | RELAY ASSY | 1 | 1 | 1 | 1 | | |
| 49 | 5EA–81950–20 | RELAY ASSY | 1 | 1 | 1 | 1 | | |
| 50 | 5DM–81950–00 | RELAY ASSY | 1 | 1 | 1 | 1 | | |
| 51 | 5PS–82576–01 | LEAN ANGLE SENSOR | 1 | 1 | 1 | 1 | | |
| 52 | 91312–04025 | BOLT | 2 | 2 | 2 | 2 | | |
| 53 | 95702–04500 | NUT, WITH WASHER | 2 | 2 | 2 | 2 | | |
| 54 | 90201–04030 | WASHER, PLATE | 4 | 4 | 4 | 4 | | |

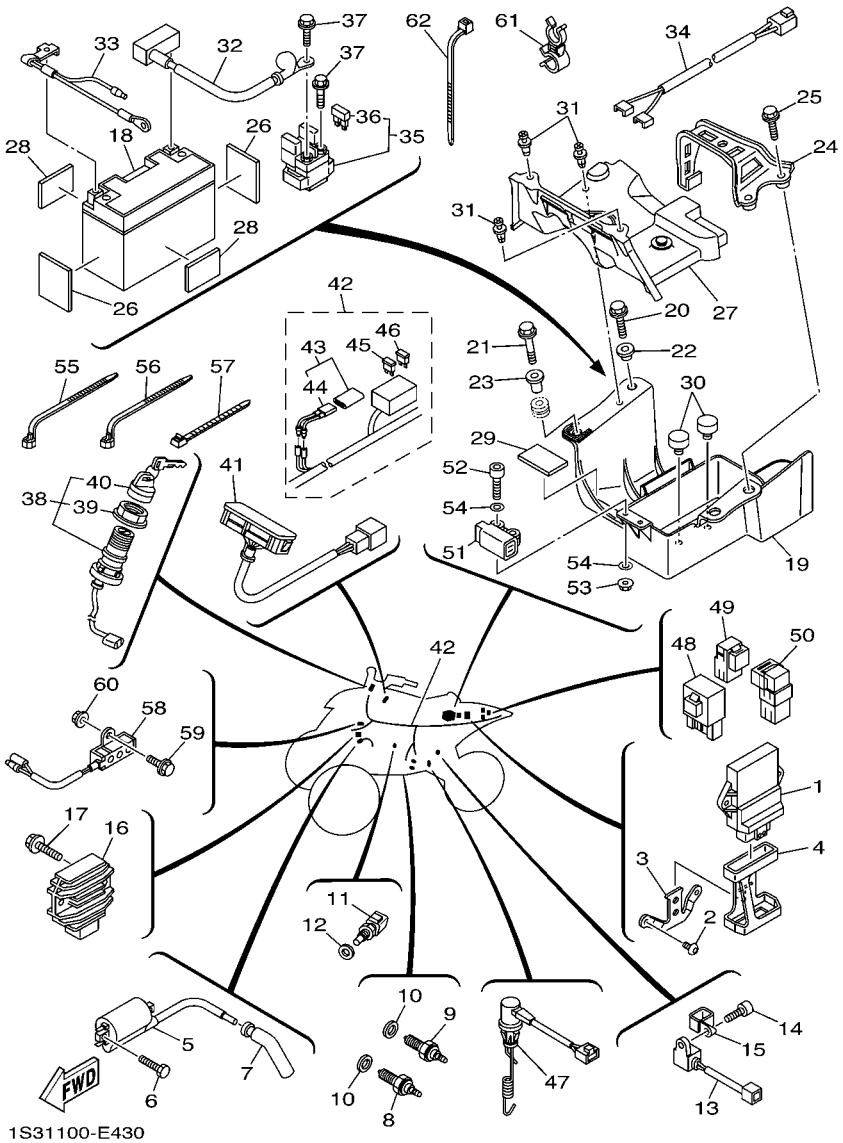


## FIG. 43 ELECTRICAL 1

| REF. NO. | PART NO. | DESCRIPTION | USA | CAN | EUR | OCE | | REMARKS |
|---|---|---|---|---|---|---|---|---|
| 55 | 90464–13077 | CLAMP | 1 | 1 | 1 | 1 | | |
| 56 | 90464–15195 | CLAMP | 1 | 1 | 1 | 1 | | |
| 57 | 90465–13M11 | CLAMP | 2 | 2 | 2 | 2 | | |
| 58 | 1S3–85370–00 | RESISTOR ASSY | 1 | 1 | 1 | 1 | | |
| 59 | 95802–06016 | BOLT, FLANGE | 1 | 1 | 1 | 1 | | |
| 60 | 95702–06500 | NUT, WITH WASHER | 1 | 1 | 1 | 1 | | |
| 61 | 90464–16013 | CLAMP | 1 | 1 | 1 | 1 | | |
| 62 | 90465–10098 | CLAMP | 1 | 1 | 1 | 1 | | |

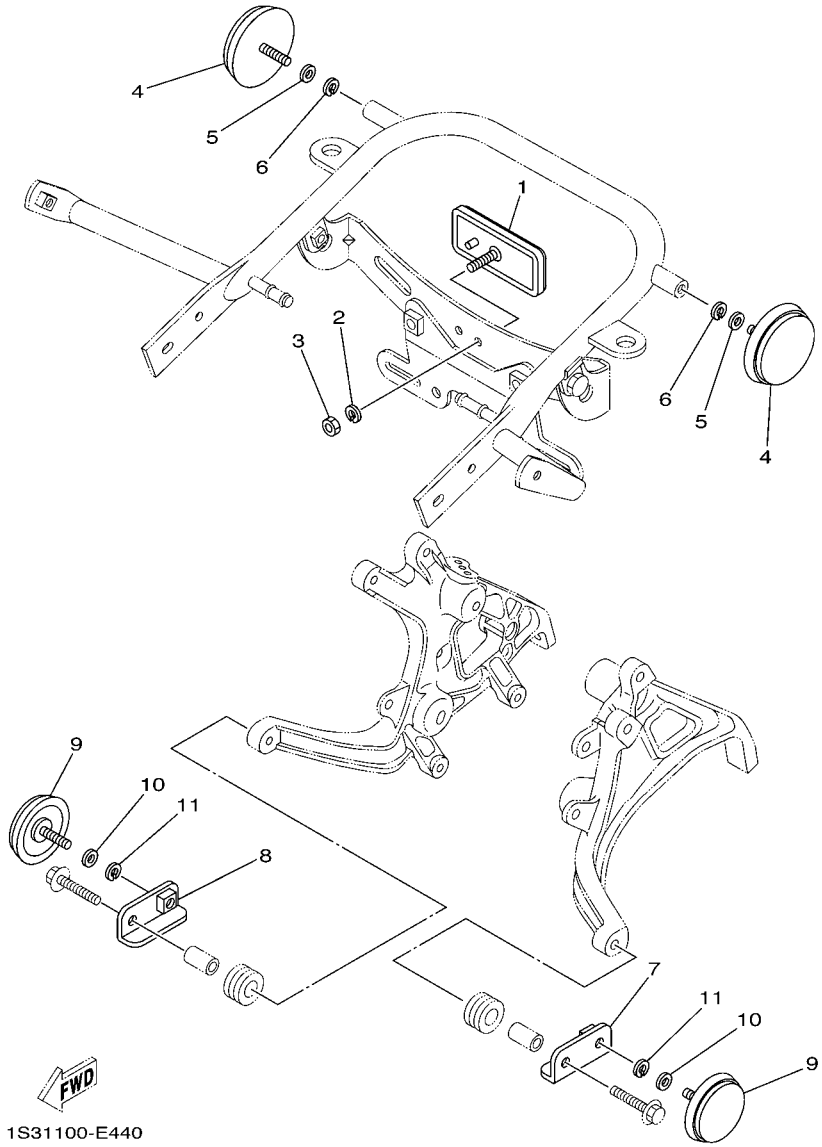


## FIG. 44 ELECTRICAL 2

| REF. NO. | PART NO. | DESCRIPTION | USA | CAN | EUR | OCE | | REMARKS |
|---|---|---|---|---|---|---|---|---|
| 1 | 3Y6–85130–02 | REAR REFLECTOR ASSY | | 1 | 1 | | | |
| 2 | 92902–05100 | WASHER, SPRING | | 1 | 1 | | | |
| 3 | 95302–05600 | NUT | | 1 | 1 | | | |
| 4 | 449–85131–02 | REFLECTOR, REAR 1 | | 2 | | | | |
| 5 | 92902–05200 | WASHER | | 2 | | | | |
| 6 | 92902–05100 | WASHER, SPRING | | 2 | | | | |
| 7 | 1S3–85112–10 | BRACKET, REFLECTOR 1 | | 1 | | | | |
| 8 | 1S3–85122–10 | BRACKET, REFLECTOR 2 | | 1 | | | | |
| 9 | 2EK–85111–00 | REFLECTOR, FRONT 1 | | 2 | | | | |
| 10 | 92902–05200 | WASHER | | 2 | | | | |
| 11 | 92902–05100 | WASHER, SPRING | | 2 | | | | |

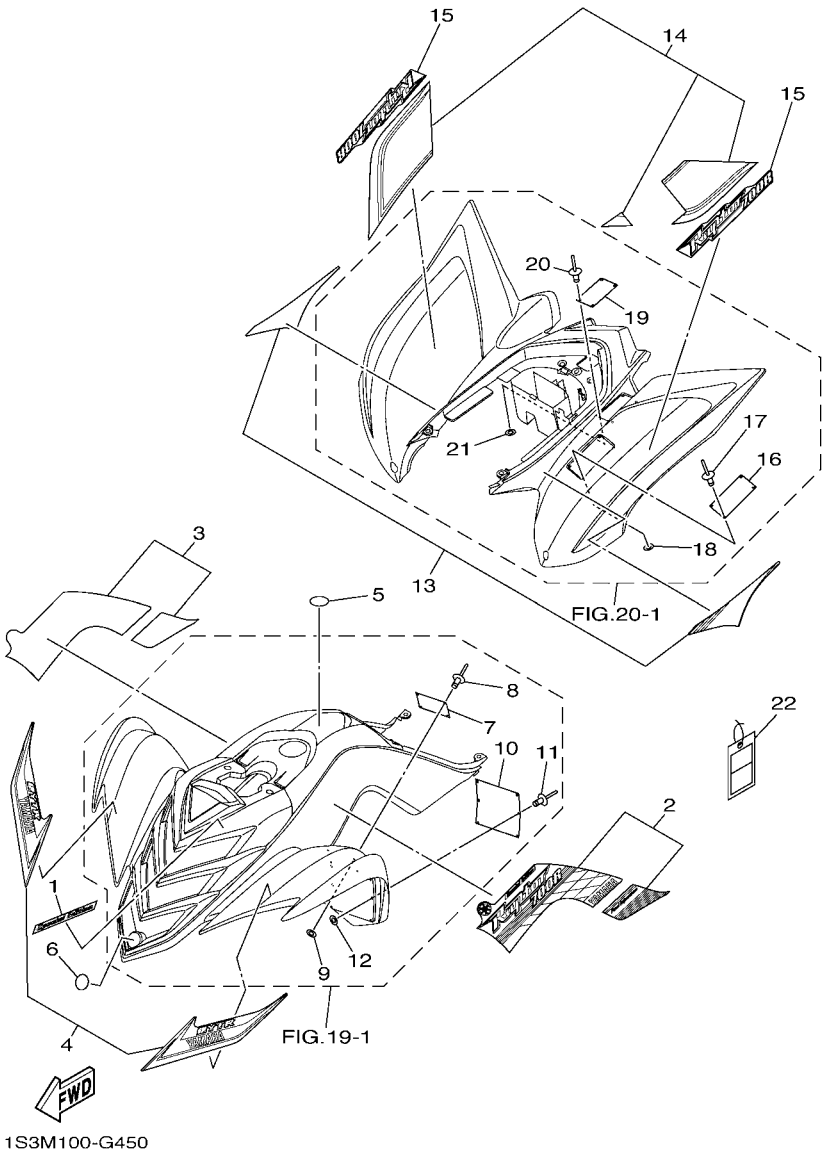


## FIG. 45 EMBLEM & LABEL 1

| REF. NO. | PART NO. | DESCRIPTION | USA | CAN | EUR | OCE | | REMARKS |
|---|---|---|---|---|---|---|---|---|
| 1 | 1S3–21565–70 | EMBLEM, 2 | 1 | | | | | |
| 2 | 1S3–2159A–20 | GRAPHIC SET 1 | 1 | | | | | |
| 3 | 1S3–2159B–20 | GRAPHIC SET 2 | 1 | | | | | |
| 4 | 1S3–2157A–20 | GRAPHIC SET, FRONT FENDER | 1 | | | | | |
| 5 | 5D3–2164B–00 | EMBLEM,3D | 1 | | | | | |
| 6 | 5KM–2175B–00 | TUNING FORK MARK | 1 | | | | | |
| 7 | 5FE–21697–01 | LABEL, CAUTION 2 | 1 | | | | | ENGLISH |
| 8 | 90267–32004 | RIVET, BLIND | 4 | | | | | |
| 9 | 90201–03008 | WASHER, PLATE | 4 | | | | | |
| 10 | 5FE–21568–01 | LABEL, WARNING | 1 | | | | | ENGLISH |
| 11 | 90267–32004 | RIVET, BLIND | 6 | | | | | |
| 12 | 90201–03008 | WASHER, PLATE | 6 | | | | | |
| 13 | 1S3–2165B–00 | GRAPHIC SET,REAR FENDER | 1 | | | | | |
| 14 | 1S3–2165A–91 | GRAPHIC SET,REAR FENDER | 1 | | | | | |
| 15 | 1S3–21609–30 | EMBLEM | 2 | | | | | |
| 16 | 5LP–21696–00 | LABEL, CAUTION | 1 | | | | | EINGLISH |
| 17 | 90267–32004 | RIVET, BLIND | 4 | | | | | |
| 18 | 90201–03008 | WASHER, PLATE | 4 | | | | | |
| 19 | 5FE–2151H–01 | LABEL 5 | 1 | | | | | ENGLISH |
| 20 | 90267–32004 | RIVET, BLIND | 4 | | | | | |
| 21 | 90201–03008 | WASHER, PLATE | 4 | | | | | |
| 22 | 5LP–2819R–00 | TAG, WARNING | 1 | | | | | |

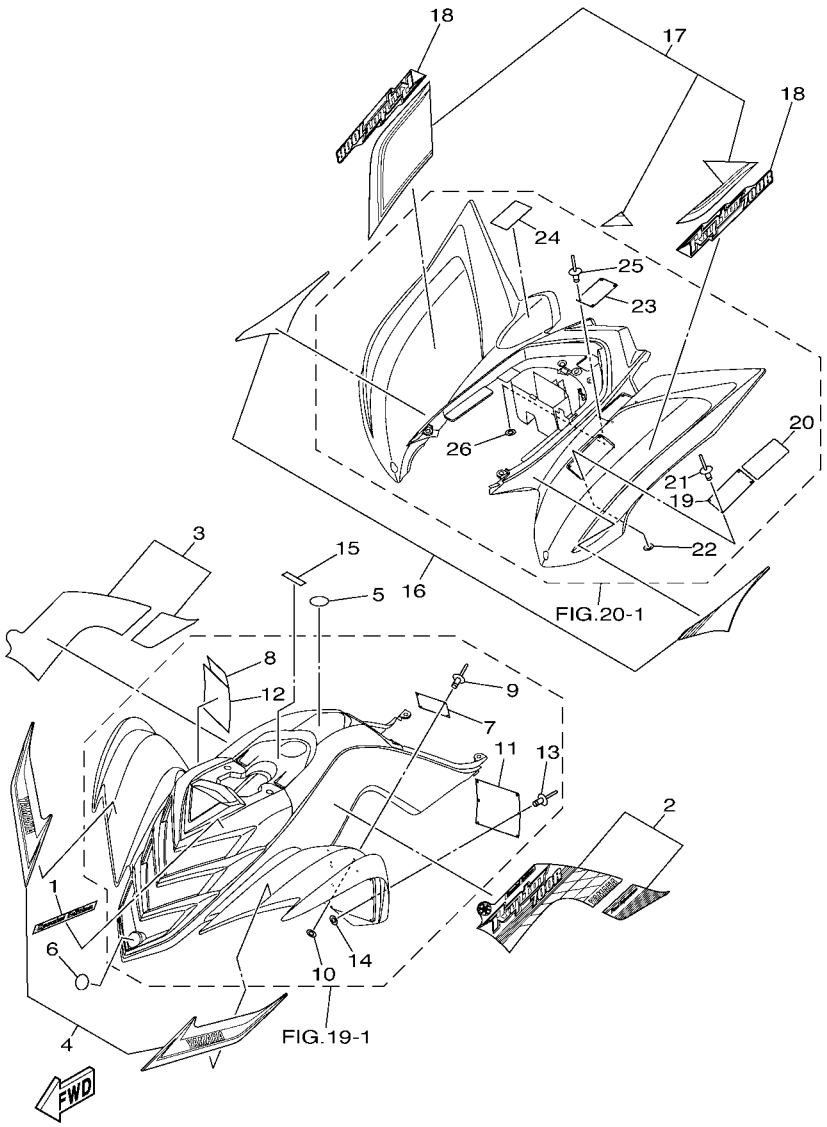


## FIG. 46 EMBLEM & LABEL 2

| REF. NO. | PART NO. | DESCRIPTION | USA | CAN | EUR | OCE | | REMARKS |
|---|---|---|---|---|---|---|---|---|
| 1 | 1S3–21565–70 | EMBLEM, 2 | | 1 | | | | |
| 2 | 1S3–2159A–20 | GRAPHIC SET 1 | | 1 | | | | |
| 3 | 1S3–2159B–20 | GRAPHIC SET 2 | | 1 | | | | |
| 4 | 1S3–2157A–30 | GRAPHIC SET, FRONT FENDER | | 1 | | | | |
| 5 | 5D3–2164B–00 | EMBLEM,3D | | 1 | | | | |
| 6 | 5KM–2175B–00 | TUNING FORK MARK | | 1 | | | | |
| 7 | 5FE–21697–01 | LABEL, CAUTION 2 | | 1 | | | | ENGLISH |
| 8 | 3JM–21697–10 | LABEL, CAUTION 2 | | 1 | | | | FRENCH |
| 9 | 90267–32004 | RIVET, BLIND | | 4 | | | | |
| 10 | 90201–03008 | WASHER, PLATE | | 4 | | | | |
| 11 | 5FE–21568–01 | LABEL, WARNING | | 1 | | | | ENGLISH |
| 12 | 4WU–21568–10 | LABEL, WARNING | | 1 | | | | FRENCH |
| 13 | 90267–32004 | RIVET, BLIND | | 6 | | | | |
| 14 | 90201–03008 | WASHER, PLATE | | 6 | | | | |
| 15 | 4SH–2416E–00 | LABEL, CAUTION CANADA | | 1 | | | | ENGLISH |
| 16 | 1S3–2165B–00 | GRAPHIC SET,REAR FENDER | | 1 | | | | |
| 17 | 1S3–2165A–A1 | GRAPHIC SET,REAR FENDER | | 1 | | | | |
| 18 | 1S3–21609–30 | EMBLEM | | 2 | | | | |
| 19 | 5LP–21696–00 | LABEL, CAUTION | | 1 | | | | EINGLISH |
| 20 | 5LP–21696–B0 | LABEL, CAUTION | | 1 | | | | FRENCH |
| 21 | 90267–32004 | RIVET, BLIND | | 4 | | | | |
| 22 | 90201–03008 | WASHER, PLATE | | 4 | | | | |
| 23 | 5FE–2151H–01 | LABEL 5 | | 1 | | | | ENGLISH |
| 24 | 4WU–2151H–10 | LABEL 5 | | 1 | | | | FRENCH |
| 25 | 90267–32004 | RIVET, BLIND | | 4 | | | | |
| 26 | 90201–03008 | WASHER, PLATE | | 4 | | | | |

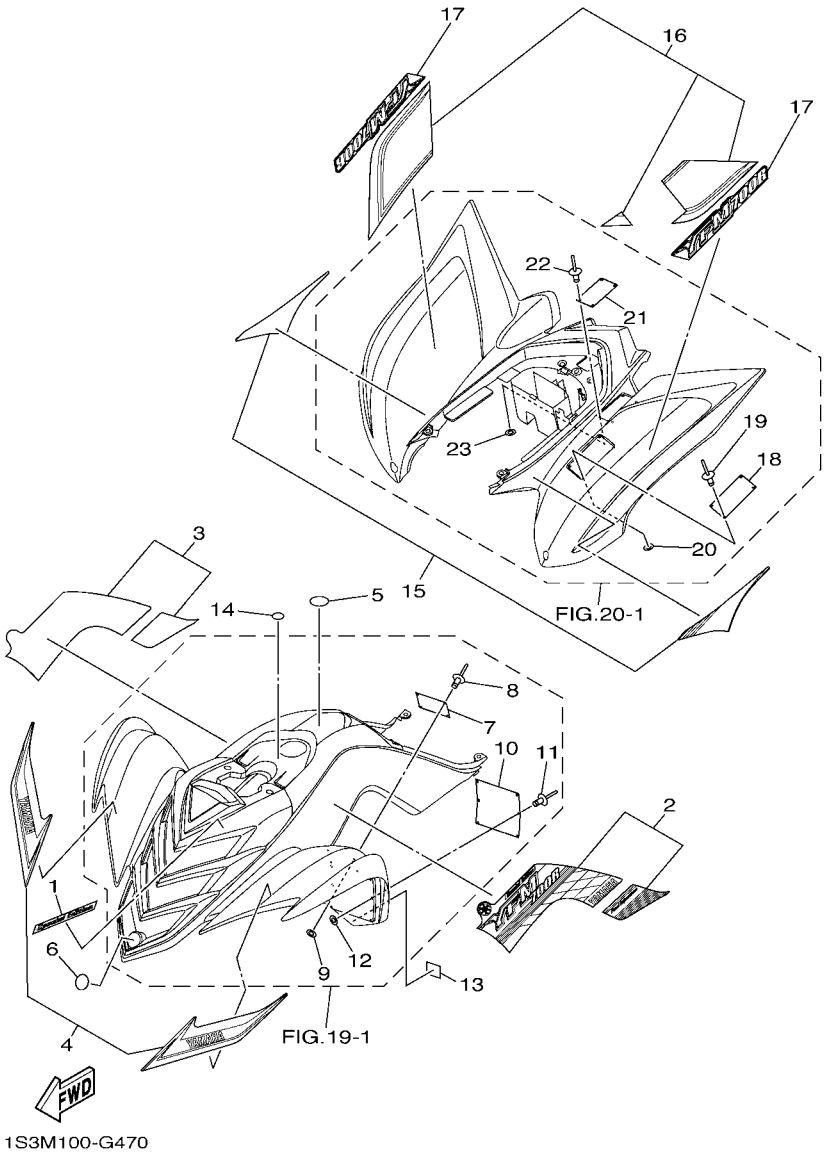


## FIG. 47 EMBLEM & LABEL 3

| REF. NO. | PART NO. | DESCRIPTION | USA | CAN | EUR | OCE | | REMARKS |
|---|---|---|---|---|---|---|---|---|
| 1 | 1S3–21565–70 | EMBLEM, 2 | | | 1 | | | |
| 2 | 1S3–2159A–30 | GRAPHIC SET 1 | | | 1 | | | |
| 3 | 1S3–2159B–30 | GRAPHIC SET 2 | | | 1 | | | |
| 4 | 1S3–2157A–30 | GRAPHIC SET, FRONT FENDER | | | 1 | | | |
| 5 | 5D3–2164B–00 | EMBLEM,3D | | | 1 | | | |
| 6 | 5KM–2175B–00 | TUNING FORK MARK | | | 1 | | | |
| 7 | 5FK–21697–00 | LABEL, CAUTION 2 | | | 1 | | | |
| 8 | 90267–32004 | RIVET, BLIND | | | 4 | | | |
| 9 | 90201–03008 | WASHER, PLATE | | | 4 | | | |
| 10 | 5FK–21568–00 | LABEL, WARNING | | | 1 | | | |
| 11 | 90267–32004 | RIVET, BLIND | | | 6 | | | |
| 12 | 90201–03008 | WASHER, PLATE | | | 6 | | | |
| 13 | 4GB–2155A–00 | MARK,EC | | | 1 | | | |
| 14 | 3ME–2415E–01 | LABEL, CAUTION | | | 1 | | | |
| 15 | 1S3–2165B–00 | GRAPHIC SET,REAR FENDER | | | 1 | | | |
| 16 | 1S3–2165A–91 | GRAPHIC SET,REAR FENDER | | | 1 | | | |
| 17 | 1S3–21609–40 | EMBLEM | | | 2 | | | |
| 18 | 5LP–21696–M0 | LABEL, CAUTION | | | 1 | | | |
| 19 | 90267–32004 | RIVET, BLIND | | | 4 | | | |
| 20 | 90201–03008 | WASHER, PLATE | | | 4 | | | |
| 21 | 5FK–2151H–00 | LABEL 5 | | | 1 | | | |
| 22 | 90267–32004 | RIVET, BLIND | | | 4 | | | |
| 23 | 90201–03008 | WASHER, PLATE | | | 4 | | | |

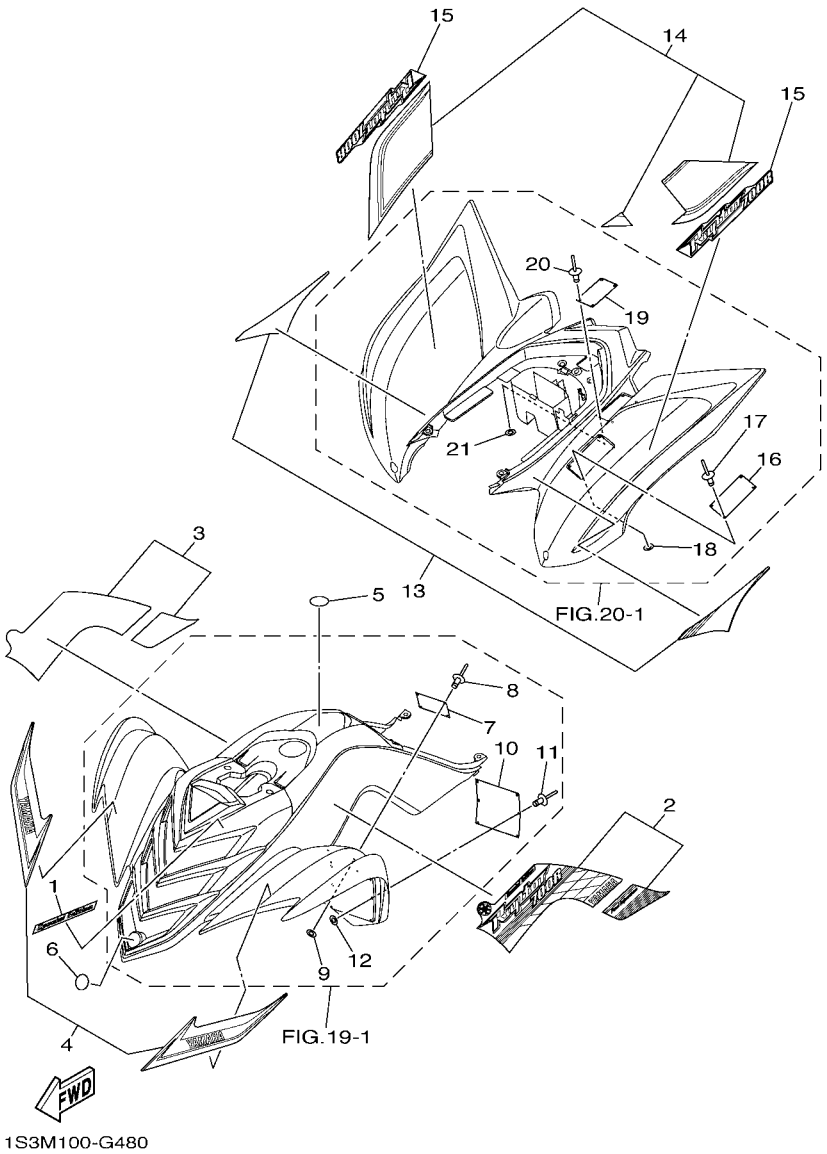


## FIG. 48 EMBLEM & LABEL 4

| REF. NO. | PART NO. | DESCRIPTION | USA | CAN | EUR | OCE | | REMARKS |
|---|---|---|---|---|---|---|---|---|
| 1 | 1S3–21565–70 | EMBLEM, 2 | | | | 1 | | |
| 2 | 1S3–2159A–20 | GRAPHIC SET 1 | | | | 1 | | |
| 3 | 1S3–2159B–20 | GRAPHIC SET 2 | | | | 1 | | |
| 4 | 1S3–2157A–30 | GRAPHIC SET, FRONT FENDER | | | | 1 | | |
| 5 | 5D3–2164B–00 | EMBLEM,3D | | | | 1 | | |
| 6 | 5KM–2175B–00 | TUNING FORK MARK | | | | 1 | | |
| 7 | 5FE–21697–01 | LABEL, CAUTION 2 | | | | 1 | | ENGLISH |
| 8 | 90267–32004 | RIVET, BLIND | | | | 4 | | |
| 9 | 90201–03008 | WASHER, PLATE | | | | 4 | | |
| 10 | 5FE–21568–11 | LABEL, WARNING | | | | 1 | | ENGLISH |
| 11 | 90267–32004 | RIVET, BLIND | | | | 6 | | |
| 12 | 90201–03008 | WASHER, PLATE | | | | 6 | | |
| 13 | 1S3–2165B–00 | GRAPHIC SET,REAR FENDER | | | | 1 | | |
| 14 | 1S3–2165A–91 | GRAPHIC SET,REAR FENDER | | | | 1 | | |
| 15 | 1S3–21609–30 | EMBLEM | | | | 2 | | |
| 16 | 5LP–21696–00 | LABEL, CAUTION | | | | 1 | | EINGLISH |
| 17 | 90267–32004 | RIVET, BLIND | | | | 4 | | |
| 18 | 90201–03008 | WASHER, PLATE | | | | 4 | | |
| 19 | 5FE–2151H–01 | LABEL 5 | | | | 1 | | ENGLISH |
| 20 | 90267–32004 | RIVET, BLIND | | | | 4 | | |
| 21 | 90201–03008 | WASHER, PLATE | | | | 4 | | |

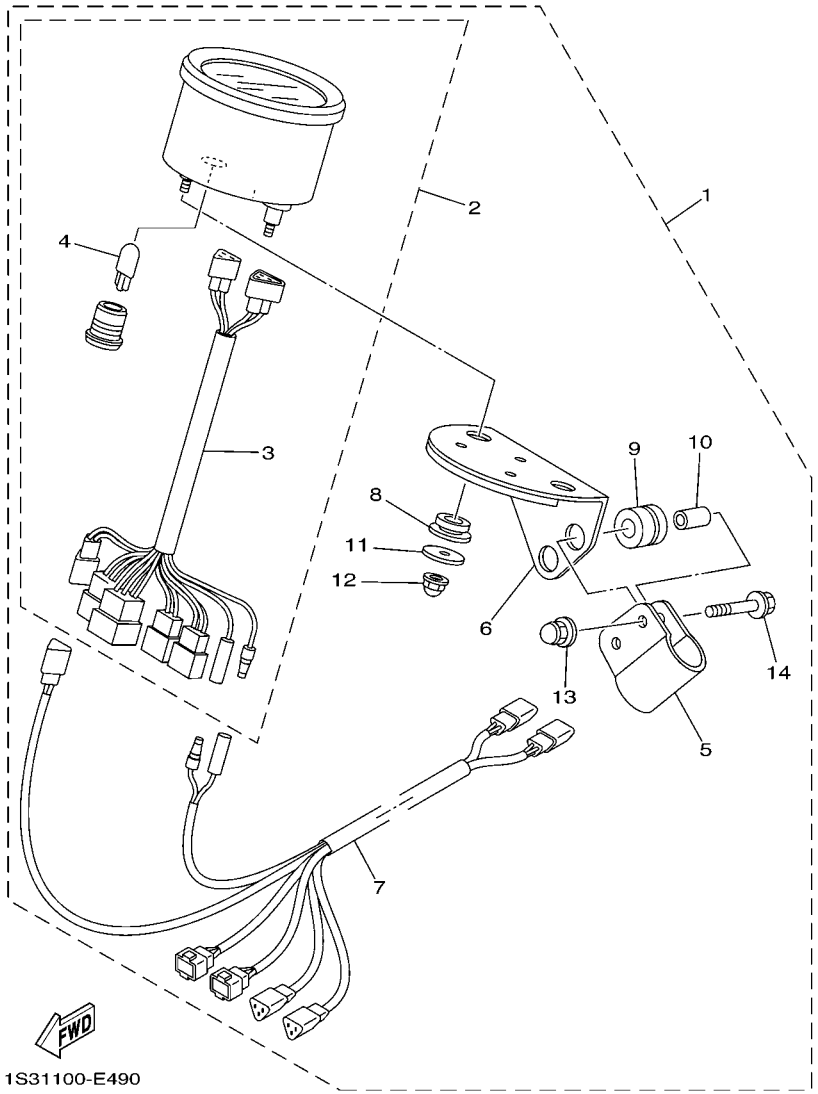


## FIG. 49 ALTERNATE FOR METER

| REF. NO. | PART NO. | DESCRIPTION | USA | CAN | EUR | OCE | | REMARKS |
|---|---|---|---|---|---|---|---|---|
| 1 | 1S3–W0081–00 | SPEEDOMETER KIT | | 1 | | | | AP |
| 2 | 1S3–83580–00 | .SPEEDOMETER ASSY | | 1 | | | | |
| 3 | 5LP–83509–00 | ..SOCKET CORD ASSY | | 1 | | | | |
| 4 | 4R0–83517–00 | ..BULB (12V-3.4W T10) | | 1 | | | | |
| 5 | 5LP–8354B–00 | .BRACKET, METER | | 1 | | | | |
| 6 | 5LP–8354C–00 | .BRACKET, METER | | 1 | | | | |
| 7 | 1S3–82509–00 | .WIRE, SUB LEAD | | 1 | | | | |
| 8 | 90480–13567 | .GROMMET | | 2 | | | | |
| 9 | 90480–14182 | .GROMMET | | 2 | | | | |
| 10 | 90387–06697 | .COLLAR | | 2 | | | | |
| 11 | 90201–052E8 | .WASHER, PLATE | | 2 | | | | |
| 12 | 90176–05054 | .NUT, CROWN | | 2 | | | | |
| 13 | 90176–06055 | .NUT, CROWN | | 2 | | | | |
| 14 | 95817–06030 | .BOLT, FLANGE | | 2 | | | | |

NUMERICAL INDEX


| PART NO. | GRID NO. |
|---|---|
| 1S3–11101–00 | B – 2 |
| 5VK–1111F–00 | B – 6 |
| 4G0–11133–11 | B – 2 |
| 1S3–11165–00 | B – 15 |
| 1S3–11166–00 | B – 15 |
| 3B4–11181–00 | B – 2 |
| 1S3–11185–00 | B – 2 |
| 1S3–11186–00 | B – 2 |
| 214–11198–01 | B – 9 |
| 1S3–11310–00 | B – 3 |
| 1S3–1131E–00 | B – 2 |
| 1S3–11351–00 | B – 3 |
| 1S3–11395–00 | B – 3 |
| 1S3–11400–00 | B – 4 |
| 1S3–11401–09 | B – 4 |
| 1S3–11422–00 | B – 4 |
| 1S3–11454–00 | B – 4 |
| 1S3–11464–00 | B – 4 |
| 1S3–11531–00 | B – 4 |
| 1S3–11536–00 | B – 4 |
| 1S3–11603–10 | B – 4 |
| 1S3–11631–10 | B – 4 |
| 5VK–11633–00 | B – 4 |
| 1S3–11651–00 | B – 4 |
| 1S3–11681–00 | B – 4 |
| 5VK–12111–00 | B – 5 |
| 1S3–12113–00 | B – 5 |
| 3YF–12116–00 | B – 5 |
| 3YF–12117–01 | B – 5 |
| 4G0–12118–00 | B – 5 |
| 5H0–12119–00 | B – 5 |
| 5VK–12121–00 | B – 5 |
| 5VK–12146–00 | B – 5 |
| 5VK–12151–00 | B – 5 |
| 5XT–12159–00 | B – 5 |
| 5VK–12161–00 | B – 5 |
| 1S3–12170–01 | B – 6 |
| 1S3–12176–00 | B – 6 |
| 3TB–12210–00 | B – 6 |
| 4DW–12213–00 | B – 6 |
| 5VK–12231–00 | B – 6 |
| 1S3–12241–00 | B – 6 |
| 1S3–12280–01 | B – 6 |
| 5VK–12284–00 | B – 6 |
| 1S3–12290–00 | B – 6 |
| 1S3–12405–00 | B – 8 |
| 1S3–1240A–00 | B – 8 |
| 5VK–12410–00 | B – 8 |

| PART NO. | GRID NO. |
|---|---|
| 1S3–12413–00 | B – 8 |
| 1S3–12420–00 | B – 7 |
| 1S3–12421–00 | B – 7 |
| 1S3–12422–00 | B – 7 |
| 1S3–12428–00 | B – 7 |
| 1S3–12436–00 | B – 7 |
| 11H–12438–10 | B – 7 |
| 1S3–1243A–00 | B – 13 |
| 1S3–1243E–00 | B – 13 |
| 1S3–12450–00 | B – 7 |
| 5VK–12459–00 | B – 7 |
| 22W–12462–00 | B – 8 |
| 1S3–12465–00 | B – 8 |
| 1S3–12467–00 | C – 12 |
| 1S3–12469–00 | B – 7 |
| 1AA–12535–00 | B – 8 |
| 1S3–12577–00 | B – 7 |
| 1S3–12578–00 | B – 8 |
| 1S3–12579–00 | B – 8 |
| 583–13113–00 | B – 9 |
| 1S3–13132–00 | B – 10 |
| 1S3–13160–00 | B – 13 |
| 1S3–13171–00 | B – 9 |
| 5LP–13300–00 | B – 9 |
| 3AJ–13325–00 | B – 9 |
| 1S3–13327–00 | B – 9 |
| 5LP–13329–00 | B – 9 |
| 1S3–13356–00 | B – 9 |
| 1S3–13410–00 | B – 9 |
| 1S3–13416–00 | B – 10 |
| 4X7–13440–01 | B – 9 |
| 1S3–13447–00 | B – 9 |
| 1S3–13464–10 | C – 15 |
| 1S3–13465–00 | C – 15 |
| 1S3–13493–00 | B – 13 |
| 1S3–13545–00 | B – 11 |
| 8FP–13556–00 | B – 13 |
| 5VK–13586–00 | B – 11 |
| 1S3–13750–10 | B – 13 |
| 5VK–13761–00 | B – 13 |
| 1S3–13907–02 | D – 9 |
| 1S3–13971–00 | D – 9 |
| 1S3–13971–10 | D – 9 |
| 4BH–14134–00 | B – 13 |
| 3JC–14146–00 | B – 13 |
| 4WV–14147–10 | B – 13 |
| 1UY–14155–00 | B – 13 |
| 1S3–14161–00 | B – 13 |

| PART NO. | GRID NO. |
|---|---|
| 8CC–14216–10 | B – 13 |
| 5JW–14348–00 | B – 13 |
| 1S3–14411–00 | B – 11 |
| 1S3–14412–01 | B – 11 |
| 31A–14419–00 | B – 11 |
| | D – 10 |
| 5KM–14419–00 | B – 11 |
| 31A–14435–00 | B – 11 |
| | D – 10 |
| 5GH–14436–00 | B – 11 |
| 1S3–14451–00 | B – 11 |
| 1S3–14453–00 | B – 11 |
| 10M–14457–00 | B – 11 |
| 1S3–14457–00 | B – 11 |
| 59V–14457–00 | B – 11 |
| 1S3–14458–00 | B – 11 |
| 1S3–14459–01 | B – 11 |
| 5VX–14503–00 | B – 13 |
| 5YP–14562–00 | B – 13 |
| 1S3–14611–00 | B – 14 |
| 1S3–14612–00 | B – 14 |
| 3YF–14613–01 | B – 14 |
| 1S3–14621–01 | B – 14 |
| 1S3–14628–00 | B – 14 |
| 1S3–14710–10 | B – 14 |
| 3YF–14714–00 | B – 14 |
| 5LP–14714–00 | B – 14 |
| 1S3–14728–00 | B – 14 |
| 1S3–14752–00 | B – 14 |
| 5JW–14945–00 | B – 13 |
| 1S3–15100–01 | B – 15 |
| 1S3–15113–00 | C – 2 |
| 1S3–15118–00 | C – 2 |
| 1S3–15189–00 | C – 2 |
| 4JT–15381–01 | B – 15 |
| 1S3–15383–00 | B – 15 |
| 1S3–15411–00 | C – 2 |
| 1S3–15421–00 | C – 2 |
| 1S3–15431–00 | C – 2 |
| 1S3–15441–00 | C – 2 |
| 1S3–15451–00 | C – 2 |
| 1S3–15462–00 | C – 2 |
| 1S3–1546C–00 | C – 2 |
| 1S3–15484–00 | E – 12 |
| 1S3–15515–00 | C – 3 |
| 1S3–15517–00 | C – 3 |
| 1VJ–15522–00 | C – 3 |
| 1S3–15560–00 | C – 3 |

| PART NO. | GRID NO. |
|---|---|
| 5VK–15590–00 | C – 3 |
| 1S3–16111–00 | C – 4 |
| 1S3–16150–00 | C – 4 |
| 2JN–16154–00 | C – 4 |
| 5TA–16321–00 | C – 4 |
| 4X7–16325–00 | C – 4 |
| 5TG–16331–00 | C – 4 |
| 3LD–16340–01 | C – 4 |
| 132–16346–00 | C – 8 |
| 1S3–16351–00 | C – 4 |
| 4XV–16356–01 | C – 4 |
| 1S3–16371–00 | C – 4 |
| 5EB–16382–00 | C – 4 |
| 5JG–16383–00 | C – 4 |
| 5JG–16384–00 | C – 4 |
| 4X7–16385–00 | C – 4 |
| 1S3–17121–00 | C – 6 |
| 1S3–17131–00 | C – 6 |
| 1S3–17141–00 | C – 6 |
| 1S3–17151–00 | C – 6 |
| 1S3–17211–00 | C – 6 |
| 1S3–17221–00 | C – 6 |
| 1S3–17231–00 | C – 6 |
| 1S3–17241–00 | C – 6 |
| 1S3–17243–00 | C – 7 |
| 1S3–17251–00 | C – 6 |
| 1S3–17253–00 | C – 7 |
| 1S3–17285–00 | C – 6 |
| 1S3–17401–00 | C – 6 |
| 1S3–17402–00 | C – 6 |
| 1S3–17430–00 | C – 7 |
| 1S3–17432–00 | C – 7 |
| 1S3–17466–00 | C – 2 |
| 1S3–17471–00 | C – 7 |
| 1S3–18101–00 | C – 8 |
| 1S3–18110–10 | C – 9 |
| 5YT–18113–00 | C – 9 |
| 1S3–18122–00 | C – 8 |
| 1S3–18140–00 | C – 8 |
| 5JW–18144–00 | C – 8 |
| 1S3–18172–00 | C – 8 |
| 3XJ–18173–10 | C – 8 |
| 3XJ–18178–00 | C – 8 |
| 3XJ–18182–00 | C – 8 |
| 3XJ–18184–00 | C – 8 |
| 4EW–18185–00 | C – 8 |
| 5LP–18337–01 | C – 8 |
| 1S3–18380–00 | C – 8 |

| PART NO. | GRID NO. |
|---|---|
| 5LP–18431–00 | C – 9 |
| 1S3–18501–00 | C – 8 |
| 1S3–18502–00 | C – 8 |
| 1S3–18503–00 | C – 8 |
| 1S3–18541–00 | C – 8 |
| 5VK–18699–00 | C – 8 |
| 1S3–21101–08 | C – 10 |
| 1S3–21190–08 | C – 10 |
| 1S3–21274–00 | F – 3 |
| 1S3–21315–10 | C – 10 |
| 1S3–21316–10 | C – 10 |
| 1S3–21317–10 | C – 10 |
| 22F–2139X–00 | F – 4 |
| 1S3–2140A–00 | C – 11 |
| | C – 13 |
| 1S3–21471–00 | C – 10 |
| 1S3–21513–00 | C – 12 |
| 1S3–21514–00 | C – 12 |
| 5FK–2151H–00 | F – 9 |
| 5FE–2151H–01 | F – 7 |
| | F – 8 |
| | F – 10 |
| 4WU–2151H–10 | F – 8 |
| 1S3–21541–00 | C – 12 |
| 1S3–21556–E0 | C – 12 |
| 4GB–2155A–00 | F – 9 |
| 1S3–21565–70 | F – 7 |
| | F – 8 |
| | F – 9 |
| | F – 10 |
| 5FK–21568–00 | F – 9 |
| 5FE–21568–01 | F – 7 |
| | F – 8 |
| 4WU–21568–10 | F – 8 |
| 5FE–21568–11 | F – 10 |
| 1S3–2157A–20 | F – 7 |
| 1S3–2157A–30 | F – 8 |
| | F – 9 |
| | F – 10 |
| 1S3–2159A–20 | F – 7 |
| | F – 8 |
| | F – 10 |
| 1S3–2159A–30 | F – 9 |
| 1S3–2159B–20 | F – 7 |
| | F – 8 |
| | F – 10 |
| 1S3–2159B–30 | F – 9 |
| 1S3–21609–30 | F – 7 |

| PART NO. | GRID NO. |
|---|---|
| 1S3–21609–30 | F – 8 |
| | F – 10 |
| 1S3–21609–40 | F – 9 |
| 5TG–21621–00 | C – 13 |
| 1S3–2163A–00 | C – 13 |
| 1S3–2163E–00 | C – 13 |
| 1S3–21643–10 | C – 14 |
| 1S3–21644–10 | C – 14 |
| 5D3–2164B–00 | F – 7 |
| | F – 8 |
| | F – 9 |
| | F – 10 |
| 1S3–2164F–10 | C – 13 |
| 5TG–2164G–20 | C – 13 |
| 1S3–2164H–10 | C – 13 |
| 1S3–2164J–10 | C – 13 |
| 1S3–2165A–91 | F – 7 |
| | F – 9 |
| | F – 10 |
| 1S3–2165A–A1 | F – 8 |
| 1S3–2165B–00 | F – 7 |
| | F – 8 |
| | F – 9 |
| | F – 10 |
| 5TG–21691–00 | C – 13 |
| 5LP–21696–00 | F – 7 |
| | F – 8 |
| | F – 10 |
| 5LP–21696–B0 | F – 8 |
| 5LP–21696–M0 | F – 9 |
| 5FK–21697–00 | F – 9 |
| 5FE–21697–01 | F – 7 |
| | F – 8 |
| | F – 10 |
| 3JM–21697–10 | F – 8 |
| 1S3–2171A–C0 | C – 12 |
| 1S3–21750–00 | C – 15 |
| 5KM–2175B–00 | F – 7 |
| | F – 8 |
| | F – 9 |
| | F – 10 |
| 5LP–21761–01 | C – 15 |
| 1S3–2177C–20 | B – 12 |
| 5KM–21871–00 | C – 15 |
| 1S3–21875–00 | C – 15 |
| 1S3–22110–00 | D – 2 |
| 4X7–22129–00 | D – 2 |
| 5YT–22129–00 | D – 3 |

NUMERICAL INDEX


| PART NO. | GRID NO. |
|---|---|
| 1S3–22141–00 | D – 2 |
| 3YF–22149–00 | D – 2 |
| 1S3–22151–00 | D – 3 |
| 1S3–22153–00 | D – 4 |
| 5TG–22178–00 | C – 10 |
| 1S3–2217A–00 | D – 3 |
| 1S3–2217F–00 | D – 3 |
| 1S3–22184–00 | D – 2 |
| 1S3–2219X–00 | D – 3 |
| 1S3–22210–C0 | D – 5 |
| 1S3–22210–D0 | D – 5 |
| 1S3–22210–E0 | D – 5 |
| 4AA–22259–40 | D – 5 |
| 4AA–22259–70 | D – 5 |
| 4AA–22259–80 | D – 5 |
| 1S3–22417–00 | D – 2 |
| 1S3–22475–00 | D – 2 |
| 1S3–23147–01 | D – 2 |
| 1S3–23317–00 | D – 4 |
| 1S3–23350–A0 | D – 7 |
| 1S3–23350–B0 | D – 7 |
| 1S3–23350–C0 | D – 7 |
| 1S3–23501–00 | D – 8 |
| 1S3–23502–00 | D – 8 |
| 5YT–23517–00 | D – 7 |
| 5TG–23540–50 | D – 7 |
| 5TG–23550–50 | D – 7 |
| 5TG–23570–50 | D – 7 |
| 5LP–23579–00 | D – 7 |
| 5TG–23580–50 | D – 7 |
| 1UY–23812–00 | D – 6 |
| 1S3–23813–10 | D – 6 |
| 8K1–23814–00 | D – 6 |
| 5TG–23816–10 | D – 6 |
| 1S3–23831–20 | D – 6 |
| 1S3–23841–20 | D – 6 |
| 1S3–23845–20 | D – 6 |
| 1UY–23868–01 | D – 6 |
| 5GT–23872–00 | C – 10 |
| 1UY–23894–01 | D – 6 |
| 1S3–24110–00 | D – 9 |
| 1S3–24110–20 | D – 9 |
| 4EW–2412F–00 | D – 9 |
| 1S3–2413X–00 | D – 10 |
| 1S3–2414H–00 | D – 9 |
| 1S3–2414J–00 | D – 10 |
| 3ME–2415E–01 | F – 9 |
| 4SH–2416E–00 | F – 8 |

| PART NO. | GRID NO. |
|---|---|
| 1S3–2416F–00 | D – 9 |
| 1S3–24181–00 | D – 9 |
| 1S3–24182–00 | D – 10 |
| 1S3–24183–00 | D – 10 |
| 1S3–24278–00 | D – 9 |
| 1S3–24279–00 | D – 9 |
| 1S3–24452–00 | D – 9 |
| 1S3–24486–00 | D – 9 |
| 1S3–24491–10 | D – 9 |
| 2FJ–24610–00 | D – 9 |
| 1S3–24710–40 | D – 11 |
| 1S3–24723–00 | D – 11 |
| 509–24724–00 | D – 11 |
| 1S3–24731–40 | D – 11 |
| 22W–24741–00 | D – 11 |
| 1S3–25111–00 | D – 12 |
| 5LP–25117–00 | D – 12 |
| 1S3–25127–00 | D – 12 |
| 5TG–2514A–00 | D – 14 |
| 5LP–25180–20 | D – 12 |
| 1S3–25311–00 | D – 2 |
| 1S3–25317–00 | D – 2 |
| 1S3–25381–10 | D – 15 |
| 1S3–25383–20 | D – 15 |
| 1S3–25386–00 | D – 15 |
| 5LP–25390–20 | D – 15 |
| 1S3–25415–00 | E – 2 |
| 5TG–25438–10 | D – 15 |
| 5D3–25689–00 | F – 2 |
| 1S3–25712–00 | E – 2 |
| 1S3–25721–00 | D – 2 |
| 1S3–25726–00 | F – 2 |
| 1S3–25727–00 | F – 2 |
| 1S3–2580E–00 | E – 8 |
| 1S3–2580T–01 | D – 13 |
| 1S3–2580U–01 | D – 13 |
| 1S3–2580V–11 | E – 2 |
| 5UG–25827–00 | E – 2 |
| 1S3–25828–00 | D – 13 |
| 5GH–25828–00 | E – 2 |
| 1AE–2582A–00 | E – 8 |
| 3GD–2582T–10 | D – 13 |
| 1S3–2582W–10 | E – 2 |
| 5MV–25833–00 | E – 6 |
| 5UG–25833–00 | E – 3 |
| 5D3–2583T–00 | E – 6 |
| 5D3–25852–00 | E – 6 |
| 3XP–25852–50 | E – 8 |

| PART NO. | GRID NO. |
|---|---|
| 2VN–25854–00 | E – 8 |
| 4TT–25854–00 | E – 6 |
| 2VN–25855–00 | E – 8 |
| 2GU–25866–00 | E – 6 |
| 5LP–25867–00 | E – 6 |
| 1S3–25871–10 | E – 6 |
| 1S3–25872–10 | E – 6 |
| 5TG–25873–10 | E – 6 |
| 1S3–25874–10 | E – 8 |
| 5TG–25875–00 | D – 8 |
| 5TG–25876–00 | D – 8 |
| 1S3–25886–00 | D – 4 |
| 5JJ–25894–00 | E – 8 |
| 1S3–25895–00 | E – 8 |
| 5UG–25898–00 | E – 2 |
| 5MV–2589F–00 | E – 6 |
| 4NK–2589H–00 | E – 6 |
| 3JD–25917–00 | D – 13 |
| | E – 2 |
| 3JD–25919–00 | D – 13 |
| 4GY–25919–50 | E – 2 |
| 5GH–25924–00 | E – 2 |
| 5TG–25924–00 | D – 13 |
| 3JD–25926–00 | D – 13 |
| | E – 2 |
| 1UY–25926–51 | D – 13 |
| | E – 2 |
| 1UY–25937–51 | D – 13 |
| | E – 2 |
| 1UY–25938–51 | D – 13 |
| | E – 2 |
| 3JD–25961–00 | D – 13 |
| | E – 2 |
| 1S3–25972–00 | E – 2 |
| 1S3–25973–00 | E – 2 |
| 1UY–25974–51 | E – 2 |
| 5TG–25977–50 | E – 3 |
| 1S3–25978–00 | E – 2 |
| 1S3–26111–10 | E – 4 |
| 1S3–26113–00 | E – 4 |
| 1S3–26124–00 | E – 4 |
| 1NV–26129–00 | E – 4 |
| 1S3–26150–10 | E – 4 |
| 5LP–26241–00 | E – 4 |
| 4KB–26250–20 | E – 4 |
| 4KB–26256–00 | E – 4 |
| 4KB–26258–00 | E – 4 |
| 1UY–26259–00 | E – 6 |

| PART NO. | GRID NO. |
|---|---|
| 1NV–2625G–01 | E – 4 |
| 4KB–2628F–20 | E – 4 |
| 4KB–2628G–00 | E – 4 |
| 1S3–26292–00 | E – 8 |
| 1NV–26304–00 | E – 4 |
| 1S3–26311–10 | E – 4 |
| 4KB–2632G–00 | E – 4 |
| 1S3–26335–00 | E – 4 |
| 1S3–26341–00 | E – 5 |
| 31A–26372–00 | E – 5 |
| 1S3–2637E–10 | E – 4 |
| 1NV–26398–00 | E – 4 |
| 371–27114–00 | D – 11 |
| 1S3–27211–10 | E – 7 |
| 4SS–27218–00 | E – 8 |
| 2YK–27222–00 | E – 8 |
| 1S3–27411–10 | E – 7 |
| 1S3–27421–10 | E – 7 |
| 1S3–27453–00 | E – 8 |
| 5TG–28100–10 | C – 11 |
| 1NV–2811A–01 | C – 11 |
| 5LP–2819R–00 | F – 7 |
| 1S3–2845N–00 | E – 10 |
| 1S3–2845R–00 | E – 10 |
| 1S3–2845R–10 | E – 10 |
| 1S3–2845R–20 | E – 10 |
| 1S3–81410–00 | E – 11 |
| 1S3–81450–00 | E – 11 |
| 3AJ–81801–00 | E – 12 |
| 3KS–81809–00 | E – 12 |
| 1S3–81815–00 | E – 12 |
| 3AJ–81826–00 | E – 12 |
| 4XV–8182A–00 | E – 12 |
| 11H–81844–00 | E – 12 |
| 1FK–81847–00 | E – 12 |
| 4NK–81850–00 | E – 12 |
| 4G0–81871–00 | E – 12 |
| 1S3–81890–00 | E – 12 |
| 1S3–81940–00 | F – 4 |
| 5DM–81950–00 | F – 4 |
| 5EA–81950–20 | F – 4 |
| 5VK–81950–30 | F – 4 |
| 5BN–81960–00 | F – 3 |
| 5GJ–82100–01 | F – 3 |
| 1S3–82115–00 | F – 4 |
| 1S3–82116–10 | F – 4 |
| 5TG–82121–10 | F – 4 |
| 1S3–82122–00 | F – 4 |

| PART NO. | GRID NO. |
|---|---|
| 1S3–82123–00 | F – 3 |
| 1S3–82128–00 | F – 3 |
| 1S3–82129–00 | F – 3 |
| 1S3–8212B–00 | F – 3 |
| 116–82131–00 | C – 11 |
| 2GH–82151–00 | F – 4 |
| 5JJ–82151–10 | F – 4 |
| 5JJ–82151–30 | F – 4 |
| 5GT–82180–00 | F – 4 |
| 3TB–82310–00 | F – 3 |
| 5VK–82370–00 | F – 3 |
| 1C7–82380–00 | B – 13 |
| 1S3–82509–00 | F – 11 |
| 5LP–82510–00 | F – 4 |
| 1S3–82530–10 | F – 4 |
| 3GB–82540–01 | F – 3 |
| 5LP–82540–01 | F – 3 |
| 1S3–82541–00 | F – 4 |
| 5GT–82560–00 | F – 4 |
| 3HN–82569–00 | F – 4 |
| 5PS–82576–01 | F – 4 |
| 3HN–82579–00 | F – 4 |
| 1S3–82590–10 | F – 4 |
| 5YT–82910–10 | F – 2 |
| 5YT–82911–10 | F – 2 |
| 4V4–82913–00 | E – 4 |
| 5TG–82913–00 | F – 2 |
| 5KM–82917–00 | F – 2 |
| 5LP–83509–00 | F – 11 |
| 4R0–83517–00 | F – 11 |
| 1S3–83530–00 | F – 4 |
| 5LP–8354B–00 | F – 11 |
| 5LP–8354C–00 | F – 11 |
| 1S3–83580–00 | F – 11 |
| 1S3–83755–00 | F – 3 |
| 2HT–83912–00 | F – 2 |
| 5D3–83922–00 | E – 6 |
| 5TG–83923–00 | F – 2 |
| 437–83936–01 | E – 4 |
| 1S3–83973–00 | F – 2 |
| 5D3–83980–00 | E – 6 |
| 5TG–84110–12 | E – 13 |
| 1S3–8413J–00 | E – 13 |
| 5TG–84140–01 | E – 13 |
| 1S3–84165–00 | E – 13 |
| 1S3–84166–00 | E – 13 |
| 5TG–84310–12 | E – 13 |
| 4KB–84314–01 | E – 13 |

| PART NO. | GRID NO. |
|---|---|
| 5TG–84340–01 | E – 13 |
| 1S3–84703–10 | E – 15 |
| 1S3–84710–00 | E – 14 |
| | E – 15 |
| 1S3–84716–20 | E – 14 |
| | E – 15 |
| 1S3–84736–00 | E – 14 |
| | E – 15 |
| 1S3–84751–10 | E – 15 |
| 2EK–85111–00 | F – 6 |
| 1S3–85112–10 | F – 6 |
| 1S3–85122–10 | F – 6 |
| 3Y6–85130–02 | F – 6 |
| 449–85131–02 | F – 6 |
| 1S3–85370–00 | F – 5 |
| 1S3–85546–00 | F – 3 |
| 5PS–85790–00 | F – 3 |
| 8GL–85885–00 | B – 13 |
| 5VU–85886–00 | B – 11 |
| 1S3–8591A–00 | F – 3 |
| 5D3–W0041–00 | E – 6 |
| 1S3–W0042–50 | E – 8 |
| 1S3–W0045–00 | D – 13 |
| 1S3–W0045–10 | D – 14 |
| 1S3–W0046–01 | E – 2 |
| 3GD–W0047–00 | E – 2 |
| 3LC–W0047–50 | D – 13 |
| 1UY–W0048–50 | D – 13 |
| | E – 2 |
| 5TG–W0057–00 | D – 13 |
| 5UG–W0057–00 | E – 2 |
| 1S3–W0081–00 | F – 11 |
| 1S3–W2151–10 | C – 12 |
| 1S3–W215B–10 | C – 12 |
| 1S3–W215C–10 | C – 12 |
| 1S3–W215E–10 | C – 12 |
| 1S3–W2161–50 | C – 13 |
| 1S3–W216B–50 | C – 13 |
| 1S3–W216C–50 | C – 13 |
| 90101–06664 | C – 8 |
| 90105–06078 | B – 6 |
| 90105–06081 | B – 15 |
| 90105–06082 | B – 9 |
| | B – 15 |
| 90105–06084 | B – 11 |
| | C – 12 |
| | C – 13 |
| | F – 3 |

| PART NO. | GRID NO. |
|---|---|
| 90105–06142 | C – 9 |
| 90105–07004 | B – 6 |
| 90105–08104 | E – 3 |
| 90105–08142 | B – 14 |
| | C – 10 |
| | E – 10 |
| 90105–08184 | D – 14 |
| 90105–10131 | D – 7 |
| 90105–10132 | D – 7 |
| 90105–10135 | D – 7 |
| 90105–10294 | E – 7 |
| 90105–12038 | D – 5 |
| 90109–06169 | B – 9 |
| 90109–06172 | C – 12 |
| | D – 3 |
| 90109–06198 | C – 10 |
| 90109–06199 | D – 4 |
| 90109–06798 | F – 2 |
| 90109–067F4 | D – 8 |
| 90109–08076 | E – 2 |
| 90109–08082 | D – 13 |
| 90109–08100 | E – 10 |
| 90109–09002 | B – 2 |
| 90109–09003 | B – 2 |
| 90109–09005 | B – 2 |
| 90109–10013 | D – 15 |
| 90109–10018 | D – 3 |
| 90109–10019 | D – 5 |
| 90109–10020 | D – 3 |
| 90109–12009 | D – 3 |
| 90110–05030 | B – 9 |
| 90110–05031 | C – 2 |
| | E – 11 |
| 90110–06182 | C – 2 |
| 90110–06202 | C – 12 |
| 90110–12001 | D – 2 |
| 90111–06038 | C – 13 |
| 90113–06055 | E – 2 |
| 90114–10006 | D – 12 |
| 90114–10013 | D – 15 |
| 90119–06137 | E – 8 |
| 90119–06152 | C – 15 |
| 90119–10023 | B – 3 |
| 90122–06010 | B – 11 |
| 90123–08046 | F – 2 |
| 90149–05018 | B – 9 |
| 90149–05299 | C – 12 |
| 90149–06074 | B – 15 |

| PART NO. | GRID NO. |
|---|---|
| 90149–08018 | C – 3 |
| 90149–10034 | C – 10 |
| 90154–05013 | C – 13 |
| 90154–06014 | D – 14 |
| 90159–06029 | C – 4 |
| 90170–06128 | B – 5 |
| 90170–12054 | D – 6 |
| 90170–12055 | D – 6 |
| 90170–16326 | B – 4 |
| 90170–20274 | C – 4 |
| 90171–10001 | D – 6 |
| | D – 8 |
| 90171–14002 | D – 14 |
| 90171–16002 | D – 15 |
| 90176–05054 | F – 11 |
| 90176–06055 | F – 11 |
| 90179–08148 | F – 2 |
| 90179–16004 | B – 4 |
| 90179–20007 | C – 4 |
| 90179–22011 | C – 7 |
| 90179–36003 | E – 2 |
| 90183–05008 | C – 12 |
| 90185–10011 | C – 10 |
| | D – 15 |
| 90185–10012 | D – 3 |
| | D – 5 |
| | D – 7 |
| 90185–12007 | D – 3 |
| | D – 5 |
| 90185–14009 | D – 6 |
| 90185–16002 | D – 2 |
| 90201–03008 | F – 7 |
| | F – 8 |
| | F – 9 |
| | F – 10 |
| 90201–04027 | D – 4 |
| 90201–04028 | B – 11 |
| 90201–04030 | F – 4 |
| 90201–05015 | B – 14 |
| 90201–05019 | B – 14 |
| 90201–05025 | E – 14 |
| | E – 15 |
| 90201–052E8 | F – 11 |
| 90201–06033 | D – 9 |
| 90201–06035 | B – 14 |
| 90201–06076 | C – 13 |
| 90201–06078 | C – 12 |
| | E – 13 |

| PART NO. | GRID NO. |
|---|---|
| 90201–06089 | C – 12 |
| 90201–06090 | D – 9 |
| 90201–06093 | C – 13 |
| 90201–063F3 | D – 3 |
| 90201–08043 | C – 10 |
| 90201–08048 | B – 14 |
| 90201–08053 | C – 14 |
| 90201–08060 | E – 3 |
| 90201–08083 | E – 8 |
| 90201–082A6 | C – 15 |
| 90201–10034 | D – 3 |
| 90201–10035 | D – 3 |
| | D – 8 |
| 90201–10036 | D – 5 |
| 90201–10037 | D – 7 |
| 90201–10118 | E – 6 |
| | E – 9 |
| 90201–10614 | C – 5 |
| 90201–12030 | D – 3 |
| 90201–12032 | D – 3 |
| | D – 5 |
| 90201–12040 | C – 8 |
| 90201–12541 | B – 7 |
| 90201–12575 | C – 9 |
| 90201–14021 | D – 6 |
| 90201–14586 | D – 14 |
| 90201–152P4 | C – 7 |
| 90201–16013 | B – 4 |
| 90201–16018 | D – 2 |
| 90201–16023 | D – 15 |
| 90201–177G4 | C – 8 |
| 90201–20022 | D – 14 |
| 90201–20276 | C – 7 |
| 90201–266F6 | E – 7 |
| 90201–286K9 | C – 3 |
| 90208–20001 | C – 4 |
| 90208–37001 | E – 2 |
| 90209–06014 | B – 11 |
| 90209–10229 | D – 6 |
| | D – 8 |
| 90209–22008 | C – 6 |
| 90209–26008 | C – 6 |
| 90214–22002 | C – 6 |
| 90214–22003 | C – 6 |
| 90214–26002 | C – 6 |
| 90214–26003 | C – 6 |
| 90215–16221 | B – 4 |
| 90215–20006 | C – 4 |

| PART NO. | GRID NO. |
|---|---|
| 90215–25003 | C – 7 |
| 90240–08124 | E – 8 |
| 90252–03001 | D – 15 |
| 90267–32004 | F – 7 |
| | F – 8 |
| | F – 9 |
| | F – 10 |
| 90267–47187 | D – 4 |
| 90267–48138 | B – 11 |
| 90269–05055 | D – 10 |
| 90269–06002 | C – 12 |
| | F – 4 |
| 90269–07011 | D – 10 |
| 90280–05001 | B – 4 |
| 90282–05005 | B – 4 |
| 90282–07003 | C – 4 |
| 90338–05008 | D – 10 |
| 90338–07007 | F – 2 |
| 90338–20183 | C – 11 |
| 90338–23004 | C – 11 |
| | D – 2 |
| 90338–24260 | C – 10 |
| 90338–26004 | C – 10 |
| 90340–14003 | C – 2 |
| 90340–14029 | B – 9 |
| 90340–36001 | C – 2 |
| 90380–10002 | C – 3 |
| 90380–22111 | D – 2 |
| 90381–15088 | D – 7 |
| 90383–20032 | D – 3 |
| 90383–20033 | D – 3 |
| 90387–06098 | D – 9 |
| 90387–06136 | C – 12 |
| 90387–06146 | C – 12 |
| 90387–06153 | C – 13 |
| | E – 14 |
| | E – 15 |
| | F – 3 |
| 90387–06166 | B – 8 |
| 90387–06168 | F – 3 |
| 90387–06204 | C – 13 |
| 90387–06205 | C – 15 |
| 90387–06697 | F – 11 |
| 90387–06M17 | D – 9 |
| 90387–07598 | E – 13 |
| 90387–08064 | C – 10 |
| 90387–08073 | B – 12 |
| 90387–090R0 | D – 6 |

| PART NO. | GRID NO. |
|---|---|
| 90387–100Y6 | D – 7 |
| 90387–101R3 | D – 7 |
| 90387–12010 | D – 3 |
| 90387–12020 | D – 5 |
| 90387–12021 | D – 3 |
| 90387–12028 | D – 3 |
| | D – 5 |
| 90387–125K2 | D – 3 |
| 90387–127W0 | D – 5 |
| 90387–1504G | C – 7 |
| 90387–150R1 | D – 14 |
| 90387–16014 | D – 2 |
| 90387–17009 | B – 15 |
| 90387–20005 | D – 14 |
| 90387–20021 | C – 6 |
| 90387–22006 | C – 6 |
| 90387–26004 | C – 6 |
| 90387–26005 | C – 6 |
| 90387–28008 | C – 6 |
| 90387–28009 | C – 7 |
| 90401–08004 | B – 2 |
| 90401–10015 | E – 6 |
| | E – 8 |
| 90401–10024 | B – 9 |
| 90430–05126 | B – 9 |
| 90430–06014 | B – 7 |
| | B – 8 |
| 90430–08119 | B – 2 |
| 90430–10148 | F – 3 |
| 90430–10188 | B – 9 |
| 90430–12202 | F – 3 |
| 90430–14043 | B – 10 |
| 90445–083J4 | D – 9 |
| 90445–09777 | C – 15 |
| 90445–09M30 | C – 15 |
| 90445–11034 | C – 15 |
| 90445–16007 | D – 10 |
| 90450–22017 | C – 15 |
| 90450–32015 | B – 7 |
| | B – 8 |
| 90450–59006 | B – 11 |
| 90450–72003 | B – 11 |
| 90460–75020 | B – 11 |
| 90461–10004 | F – 3 |
| 90461–10011 | C – 2 |
| | C – 7 |
| 90462–08046 | C – 2 |
| 90464–12036 | C – 11 |

| PART NO. | GRID NO. |
|---|---|
| 90464–12045 | C – 11 |
| 90464–13073 | E – 4 |
| 90464–13077 | F – 5 |
| 90464–14004 | D – 9 |
| 90464–15157 | E – 14 |
| | E – 15 |
| 90464–15195 | F – 5 |
| 90464–16013 | F – 5 |
| 90464–20213 | C – 11 |
| 90464–23041 | C – 15 |
| | E – 5 |
| 90464–66001 | D – 10 |
| 90465–10098 | F – 5 |
| 90465–13M11 | F – 5 |
| 90467–08003 | C – 15 |
| 90467–09006 | B – 13 |
| 90467–10008 | C – 15 |
| 90467–11044 | E – 8 |
| 90467–11090 | B – 13 |
| 90467–13062 | B – 7 |
| 90467–14057 | E – 8 |
| 90467–140A4 | B – 15 |
| 90467–15012 | B – 11 |
| 90467–160A4 | B – 11 |
| 90467–220A1 | B – 11 |
| 90468–16191 | D – 6 |
| 90480–01017 | D – 9 |
| 90480–13459 | C – 15 |
| 90480–13567 | F – 11 |
| 90480–14101 | E – 14 |
| | E – 15 |
| 90480–14102 | C – 12 |
| | E – 13 |
| 90480–14182 | F – 11 |
| 90480–15009 | E – 8 |
| 90480–18005 | D – 9 |
| 90480–18330 | B – 8 |
| 90480–24004 | C – 15 |
| 90501–043E0 | B – 10 |
| 90501–052G5 | C – 8 |
| 90501–230E4 | C – 4 |
| 90506–20380 | E – 7 |
| 90508–18018 | C – 4 |
| 90508–35007 | C – 8 |
| 90560–06201 | C – 13 |
| 91312–04006 | B – 13 |
| 91312–04025 | F – 4 |
| 91312–06010 | B – 14 |

| PART NO. | GRID NO. |
|---|---|
| 91312–06012 | B – 9 |
| 91312–06016 | C – 15 |
| | F – 3 |
| 91312–06020 | B – 7 |
| 91312–06025 | B – 6 |
| | C – 2 |
| 91312–06030 | B – 2 |
| 91312–06035 | B – 9 |
| 91312–06040 | B – 3 |
| 91312–06095 | B – 9 |
| 91314–08035 | B – 14 |
| 91314–08040 | D – 2 |
| 91401–16012 | E – 8 |
| 91402–20020 | D – 6 |
| | D – 8 |
| 91402–30025 | D – 14 |
| 92012–06010 | E – 15 |
| | F – 3 |
| 92012–06012 | F – 2 |
| 92012–06025 | C – 13 |
| 92012–06030 | E – 11 |
| 92012–08016 | C – 14 |
| | E – 8 |
| 92012–08020 | C – 14 |
| 92012–08035 | C – 14 |
| | E – 8 |
| 92014–06016 | F – 2 |
| 92902–05100 | E – 4 |
| | F – 6 |
| 92902–05200 | F – 6 |
| 92902–05600 | E – 4 |
| 92902–06200 | B – 14 |
| 92902–06600 | B – 6 |
| 92902–08600 | C – 4 |
| 92902–10200 | D – 12 |
| | D – 15 |
| 92903–08600 | D – 2 |
| 92906–04100 | E – 8 |
| 92906–04600 | E – 8 |
| 92907–06600 | B – 8 |
| 93101–12173 | B – 7 |
| 93101–14164 | C – 2 |
| 93101–25106 | B – 4 |
| 93102–12106 | C – 9 |
| 93102–12224 | C – 8 |
| 93102–15212 | C – 5 |
| 93102–22216 | D – 12 |
| 93102–25081 | C – 10 |

| PART NO. | GRID NO. |
|---|---|
| 93102–25099 | C – 10 |
| 93102–35393 | C – 7 |
| 93104–09025 | E – 4 |
| 93105–26026 | D – 12 |
| 93106–22019 | D – 2 |
| 93106–46003 | D – 2 |
| 93109–20076 | D – 3 |
| 93112–31011 | D – 6 |
| 93210–07135 | B – 9 |
| | B – 15 |
| 93210–10197 | B – 10 |
| | C – 15 |
| 93210–13361 | B – 9 |
| 93210–14369 | C – 2 |
| 93210–15620 | E – 8 |
| 93210–16629 | C – 15 |
| 93210–207A0 | C – 2 |
| 93210–21190 | C – 15 |
| 93210–25001 | C – 7 |
| 93210–33786 | B – 7 |
| 93210–357A3 | C – 2 |
| 93210–36769 | D – 15 |
| 93210–41042 | B – 8 |
| 93210–61750 | B – 7 |
| 93210–64297 | B – 9 |
| 93210–66001 | D – 2 |
| 93210–71001 | D – 2 |
| 93210–78544 | B – 2 |
| 93210–96601 | B – 2 |
| 93300–60804 | C – 10 |
| 93306–00106 | B – 7 |
| 93306–00304 | C – 4 |
| 93306–00415 | C – 7 |
| 93306–00431 | C – 6 |
| 93306–00446 | D – 12 |
| 93306–00502 | B – 4 |
| 93306–07209 | B – 6 |
| 93306–20231 | D – 12 |
| 93306–20352 | C – 10 |
| 93306–20481 | B – 4 |
| 93306–20501 | C – 6 |
| 93306–27803 | C – 7 |
| 93306–30810 | B – 4 |
| 93306–90509 | C – 8 |
| 93306–90804 | D – 2 |
| 93306–90805 | D – 2 |
| 93310–84017 | B – 4 |
| 93315–31502 | C – 5 |

| PART NO. | GRID NO. |
|---|---|
| 93317–11020 | C – 4 |
| 93317–22237 | D – 2 |
| 93410–67085 | D – 2 |
| 93430–23054 | E – 7 |
| 93440–10085 | B – 2 |
| 93440–15012 | C – 7 |
| 93440–25084 | C – 6 |
| 93440–28062 | C – 6 |
| 93450–24154 | B – 4 |
| 93503–08007 | B – 9 |
| 93603–16219 | B – 7 |
| 93608–30002 | C – 8 |
| 93612–16254 | B – 2 |
| 93700–06004 | D – 3 |
| | D – 7 |
| 9383G–14231 | C – 7 |
| 93900–00022 | D – 15 |
| 93900–00030 | D – 12 |
| 94107–10015 | D – 12 |
| 94110–09012 | D – 15 |
| 94582–13098 | D – 15 |
| 94591–57126 | B – 6 |
| 94701–00330 | B – 2 |
| 95022–06008 | F – 4 |
| 95022–06010 | B – 8 |
| 95022–06012 | B – 14 |
| | D – 4 |
| 95022–06020 | B – 2 |
| | B – 8 |
| 95022–06025 | B – 7 |
| | B – 10 |
| | C – 15 |
| 95022–06030 | B – 15 |
| | C – 2 |
| 95022–06045 | B – 8 |
| 95022–06050 | B – 7 |
| 95022–06070 | B – 15 |
| 95022–06090 | B – 15 |
| 95022–06110 | B – 7 |
| 95302–05600 | F – 6 |
| 95302–06800 | D – 9 |
| 95602–06100 | F – 2 |
| 95602–06200 | C – 12 |
| | C – 13 |
| 95602–08200 | C – 14 |
| 95602–10200 | C – 10 |
| 95604–06100 | E – 6 |
| 95607–05100 | E – 4 |

| PART NO. | GRID NO. |
|---|---|
| 95612–08625 | B – 2 |
| 95702–04500 | F – 4 |
| 95702–06500 | F – 5 |
| 95702–08500 | B – 14 |
| 95702–10500 | D – 12 |
| | D – 15 |
| 95802–06010 | E – 14 |
| | E – 15 |
| 95802–06016 | F – 5 |
| 95802–06020 | F – 3 |
| 95802–06025 | F – 3 |
| 95802–06030 | B – 8 |
| | F – 3 |
| 95802–06035 | D – 9 |
| 95802–08016 | C – 15 |
| 95812–06012 | C – 9 |
| 95812–06014 | C – 12 |
| | C – 13 |
| 95812–06030 | C – 12 |
| | E – 12 |
| | E – 13 |
| 95812–08014 | C – 10 |
| 95812–08045 | C – 10 |
| 95812–10030 | E – 7 |
| 95812–10055 | C – 10 |
| 95812–10090 | C – 10 |
| 95812–10110 | C – 10 |
| 95817–06030 | F – 11 |
| 95822–06012 | B – 3 |
| 95822–06020 | C – 15 |
| 95822–06025 | E – 6 |
| 95822–08016 | C – 14 |
| 95822–08020 | C – 14 |
| 95822–08030 | D – 6 |
| 97002–05016 | F – 2 |
| 97002–05020 | F – 3 |
| 97017–06010 | B – 8 |
| 97022–06014 | C – 7 |
| 97022–06016 | B – 6 |
| 97022–06025 | C – 13 |
| 97022–08060 | D – 6 |
| 97702–50016 | E – 14 |
| | E – 15 |
| 97707–30510 | E – 13 |
| 98502–05018 | E – 4 |
| 98502–05020 | E – 4 |
| 98506–04012 | E – 8 |
| 98507–05012 | B – 13 |

| PART NO. | GRID NO. |
|---|---|
| 98507–06010 | B – 13 |
| 98507–06012 | B – 13 |
| 98702–06025 | D – 9 |
| 98902–06010 | B – 14 |
| 99001–07600 | C – 4 |
| 99001–10600 | C – 9 |
| 99009–10400 | C – 5 |
| 99009–11400 | B – 9 |
| 99009–12400 | B – 7 |
| 99009–17400 | C – 8 |
| 99009–20400 | C – 7 |
| 99009–30400 | D – 7 |
| 99530–08016 | B – 15 |
| 99530–10114 | B – 10 |
| | B – 15 |
| | C – 2 |
| | C – 15 |
| 99530–10120 | C – 2 |
| 99530–14016 | B – 15 |

| PART NO. | GRID NO. |
|---|---|