YAMAHA

PARTS CATALOGUE

YFM660RP (5LP5) USA
YFM660RP (5LP6) CANADA
YFM660R (5LP7) FRANCE

YAMAHA GENUINE Parts & Accessories

1A5LP-100E2

A2

YFM660RP/YFM660R
PARTS CATALOGUE
©2001 by Yamaha Motor Co., Ltd.
1st Edition, Nov. 2001
All rights reserved.
Any reprinting or unauthorized use
without the written permission of
Yamaha Motor Co., Ltd.
is expressly prohibited.
Printed in Japan

A3

FOREWORD

This Parts Catalogue is related to the parts for the model(s) in the below frame. When you are ordering replacement parts, please refer to this Parts Catalogue and quote both part numbers and part names correctly.

YFM660RP(5LP5, 5LP6), YFM660R(5LP7)

1. Modifications or additions which have been made after issue of the Parts Catalogue will be announced in the Yamaha Parts News.
   It is advisable that you make necessary corrections to the Parts Catalogue according to the Yamaha Parts News.
2. Abbreviations
   The Following abbreviations are used in this Parts Catalogue.
   "UR" Use specified parts number.
   "UN" Use as many as needed.
   "AP" Alternate Parts
   "LM" Local Made (Parts need to be ordered locally)
   "F#" Frame No. (Applicable machine No.)
3. Parts, which are to be supplied in an assembly, are listed with a dot(.) in front of the part name as shown below.

   EXAMPLE
   CARBURETOR ASSY
   .JET, PILOT
   .NOZZLE, MAIN
4. Number of component for assembly
   The numeral appearing to the right of each component part indicates the quantity of parts for each assembly unit.

   EXAMPLE

PART NO.	DESCRIPTION	Q'TY	REMARKS
2F5-83310-60	FRONT FLASHER LIGHT ASSY	2	
115-83311-60	.BULB (6V-18W)	1	
1M1-83309-60	.REFLECTOR	1	

5. Applicable colors of graphics are represented in the "REMARKS" as shown below.

PART NO.	DESCRIPTION	Q'TY	REMARKS
2N4-24110-00-X5	FUEL TANK COMP.	1	MXR
3J1-24240-10	GRAPHIC, FUEL TANK	1	FOR MXR

6. Applicable Serial No.

   Engine Serial No.

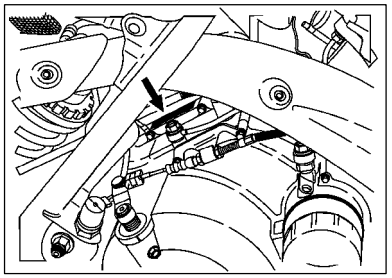

   Frame Serial No.

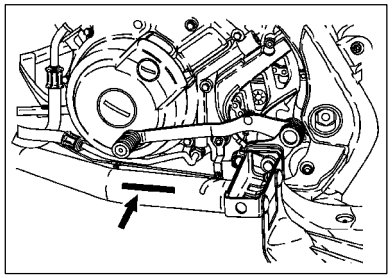

7. Note that the illustrations for reference in finding parts numbers, not to be used for assembling. When assembling, please use the applicable service manual.
8. The asterisk (*) before a reference number indicates modification items after the first edition.

MODEL LABEL

(1) A label called “Model Label” is affixed in the location as indicated in (3) below. When using this parts catalogue, please be sure to cross–refer the “model code – production code No.” in the catalogue to the “model code – production code No. “indicated on the Model Label affixed onto the product concemed.

(2) “Model Label”Indication

	a b
○	xxxx – xxx
●	x c

a: Model Type Code
b: Production Code No.
c: Colouring Type

○	4TW1–010
●	A

(3) Model Label Affixing Location

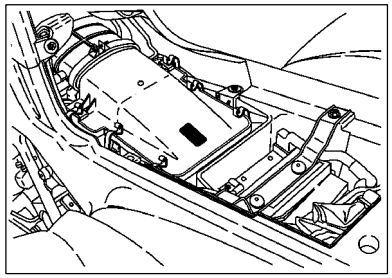

(4) Model Code – Production Code Number of Model Listed in This Parts Catalog

Model Code	Production Code No.	Country (destination)	Model Code	Production Code No.	Country (destination)
5LP5	010	USA			
5LP6	010	CANADA			
5LP7	010	FRANCE			

(5) Colouring Information

Model Code	Colouring type code	Colour code	Colour Name	Abbrevi-ation
5LP5 5LP6 5LP7	A	0583	DEEP PURPLISH BLUE SOLID E	DPBSE
5LP5 5LP6	B	00UJ	RADICAL WHITE	RW

CONTENTS

ENGINE

CYLINDER HEAD B2
CYLINDER B4
CRANKSHAFT. PISTON B5
VALVE B7
CAMSHAFT. CHAIN B8
WATER PUMP B9
RADIATOR. HOSE B10
OIL PUMP B11
INTAKE B13
CARBURETOR B15
EXHAUST C3
CRANKCASE C4
CRANKCASE COVER 1 ..... C5
STARTER C7
CLUTCH C8
TRANSMISSION C10
SHIFT CAM. FORK C12

CHASSIS

FRAME C14
FRONT FENDER D2
REAR FENDER D3
OIL TANK D4
REAR ARM D5
REAR SUSPENSION D8
STEERING D9
FRONT SUSPENSION. WHEEL D10
FUEL TANK D12
SEAT D13
FRONT WHEEL D14
FRONT BRAKE CALIPER D15
REAR WHEEL E2
REAR BRAKE CALIPER E3
STEERING HANDLE. CABLE E4
FRONT MASTER CYLINDER E6
STAND. FOOTREST E7
REAR MASTER CYLINDER E8
GUARD E9
GENERATOR E10
STARTING MOTOR E11
HEADLIGHT E12
TAILLIGHT E13
TAILLIGHT 2 ..... E14
HANDLE SWITCH. LEVER E15
ELECTRICAL 1 ..... F3
ELECTRICAL 2 ..... F5
EMBLEM.LABEL 1 ..... F6
EMBLEM.LABEL 2 ..... F7
EMBLEM.LABEL 3 ..... F9
ALTERNATE (METER) F10

INDEX

NUMERICAL INDEX M1

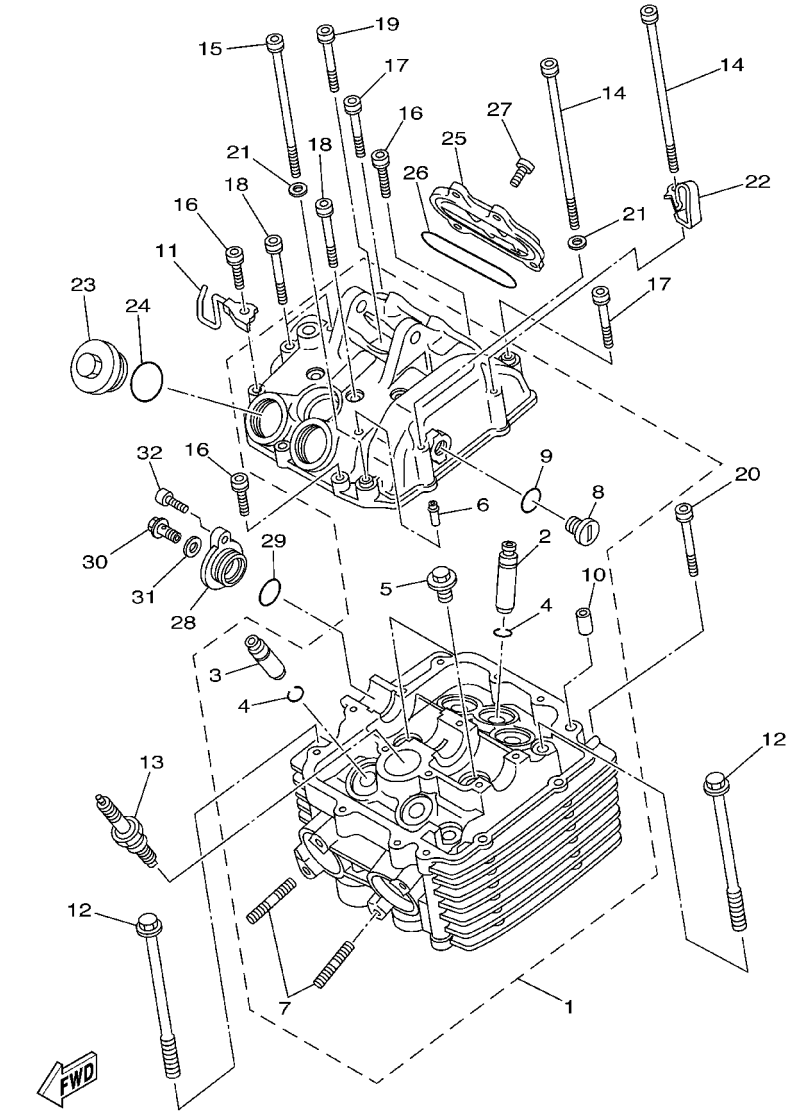

5LP5100-2010

FIG. 1 CYLINDER HEAD

REF. NO.	PART NO.	DESCRIPTION	USA	CAN	FRA			REMARKS
1	5LP–11101–02	CYLINDER HEAD ASSY	1	1	1			
2	3YF–11133–10	.GUIDE, INTAKE VALVE	3	3	3			
3	3YF–11134–10	.GUIDE, EXHAUST VALVE	2	2	2			
4	93440–10085	.CIRCLIP	5	5	5			
5	90340–18101	.PLUG, STRAIGHT SCREW	2	2	2			
6	22U–11126–00	.PIPE, BREATHER 3	1	1	1			
7	90116–06541	.BOLT, STUD	4	4	4			
8	90340–14120	.PLUG, STRAIGHT SCREW	2	2	2			CIRCUIT SILVER
9	93210–13657	.O–RING	1	1	1			
10	99530–10116	.PIN, DOWEL	2	2	2			
11	5LP–1135A–00	BRACKET	1	1	1			
12	90105–09647	BOLT, FLANGE	2	2	2			
13	94701–00241	PLUG, SPARK (NGK DPR8EA–9)	1	1	1			
14	91317–06130	BOLT	2	2	2			
15	91317–06115	BOLT	1	1	1			
16	91317–06025	BOLT	5	5	5			
17	91317–06040	BOLT	2	2	2			
18	91317–06055	BOLT	6	6	6			
19	90109–063E9	BOLT	1	1	1			
20	91317–06050	BOLT	1	1	1			
21	92907–06600	WASHER, PLATE	2	2	2			
22	5LP–1131E–01	HOLDER 1	1	1	1			
23	1L9–11186–00	COVER, CYLINDER HEAD SIDE 2	2	2	2			
24	93210–32172	O–RING	2	2	2			
25	3YF–11187–00	COVER, CYLINDER HEAD SIDE 3	1	1	1			
26	93210–71360	O–RING	1	1	1			
27	91317–06018	BOLT	4	4	4			

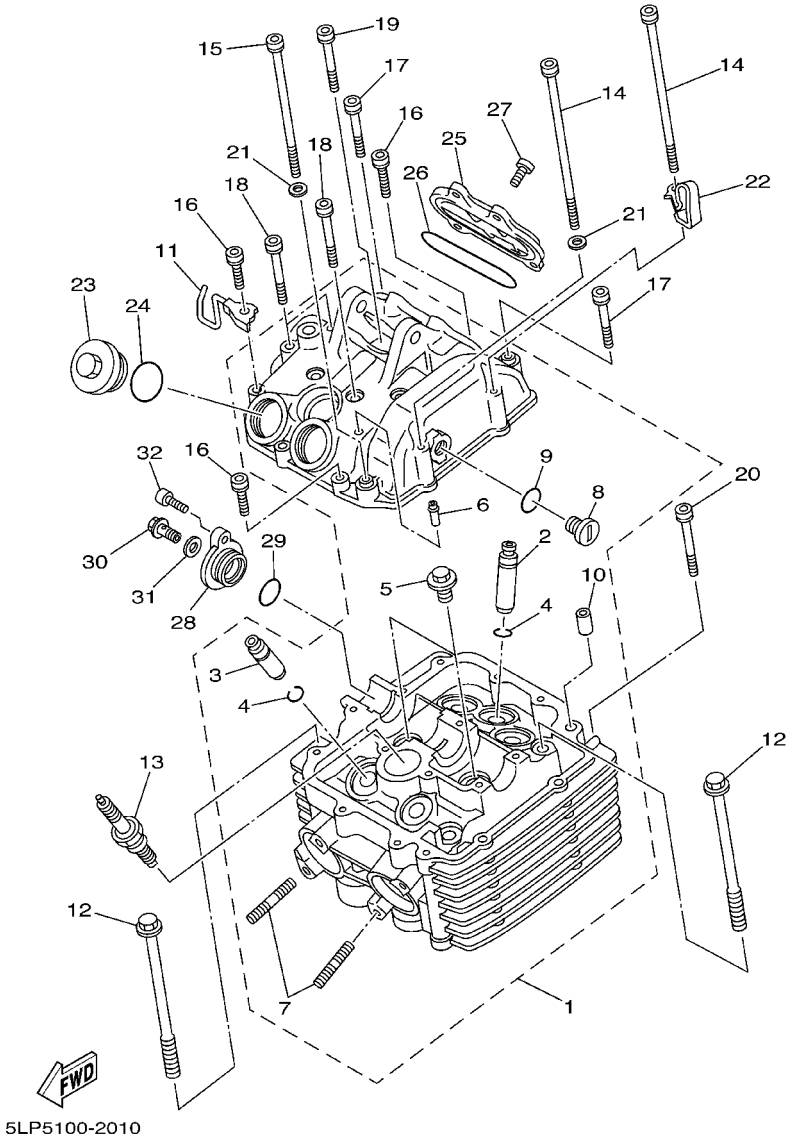

FIG. 1 CYLINDER HEAD

REF. NO.	PART NO.	DESCRIPTION	USA	CAN	FRA			REMARKS
28	34K–12215–03	CAP, TENSIONER CASE	1	1	1			
29	93210–19522	O–RING	1	1	1			
30	90401–06001	BOLT, UNION	1	1	1			
31	90430–06192	GASKET	1	1	1			
32	90110–06093	BOLT, HEXAGON SOCKET HEAD	1	1	1			

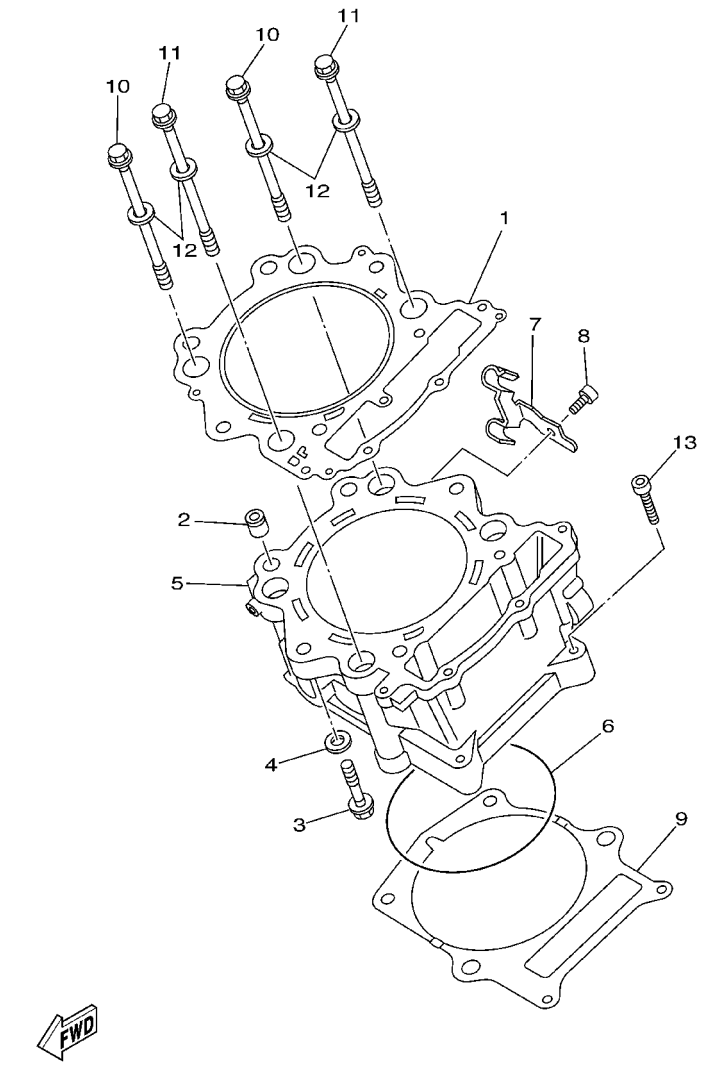

FIG. 2 CYLINDER

REF. NO.	PART NO.	DESCRIPTION	USA	CAN	FRA			REMARKS
1	3YF-11181-00	GASKET, CYLINDER HEAD 1	1	1	1			
2	93612-16254	PIN, DOWEL	2	2	2			
3	90105-09648	BOLT, FLANGE	4	4	4			
4	90201-096J9	WASHER, PLATE	6	6	6			
5	3YF-11310-01	CYLINDER	1	1	1			
6	93211-01467	O-RING	1	1	1			
7	5LP-11395-00	HOLDER	1	1	1			
8	91317-06014	BOLT	1	1	1			
9	3YF-11351-00	GASKET, CYLINDER	1	1	1			
10	90105-10649	BOLT, FLANGE	2	2	2			
11	90105-10650	BOLT, FLANGE	2	2	2			
12	90201-101A4	WASHER, PLATE	4	4	4			
13	91317-06040	BOLT	2	2	2			

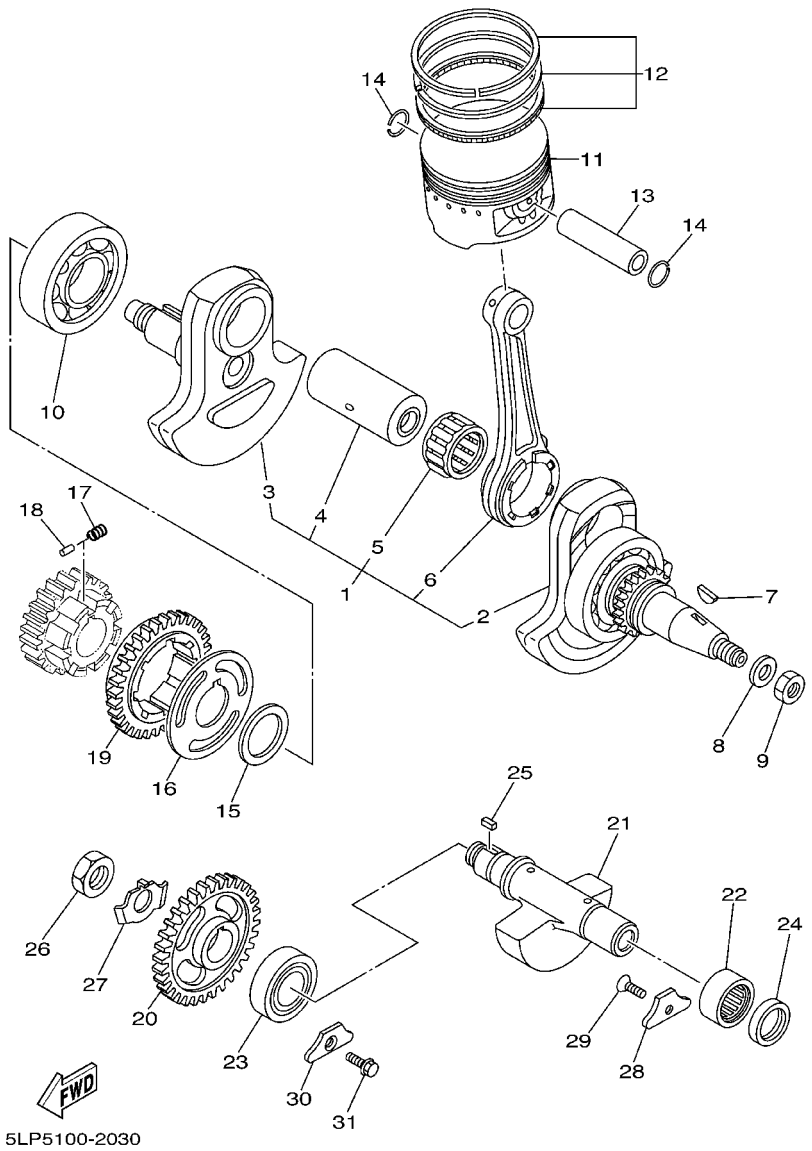

FIG. 3 CRANKSHAFT. PISTON

REF. NO.	PART NO.	DESCRIPTION	USA	CAN	FRA			REMARKS
1	5LP–11400–10	CRANKSHAFT ASSY	1	1	1			
2	5LP–W1141–00	.CRANK 1	1	1	1			
3	5LP–11422–10	.CRANK 2	1	1	1			
4	5KM–11681–00	.PIN, CRANK 1	1	1	1			
5	93310–637D3	.BEARING	1	1	1			
6	5LP–11651–00	.ROD, CONNECTING	1	1	1			
7	90280–16053	KEY, WOODRUFF	1	1	1			
8	90201–14226	WASHER, PLATE	1	1	1			
9	90179–14317	NUT	1	1	1			
10	93306–30702	BEARING (B6307)	1	1	1			
11	3YF–11631–00–X0	PISTON (STD)	1	1	1			
	3YF–11636–00	PISTON (0.50MM O/S)	1	1	1			AP
	3YF–11638–00	PISTON (1.00MM O/S)	1	1	1			AP
12	3YF–11610–00	PISTON RING SET (STD)	1	1	1			
	3YF–11610–20	PISTON RING SET (0.50MM O/S)	1	1	1			AP
	3YF–11610–40	PISTON RING SET (1.00MM O/S)	1	1	1			AP
13	3YF–11633–01	PIN, PISTON	1	1	1			
14	93450–24028	CIRCLIP	2	2	2			
15	90201–301F4	WASHER, PLATE	1	1	1			
16	34K–11565–02	WASHER, BEARING COVER	1	1	1			
17	90501–20003	SPRING, COMPRESSION	16	16	16			
18	93605–10090	PIN, DOWEL	16	16	16			
19	5LP–11536–10	GEAR, DRIVE	1	1	1			
20	5LP–11531–00	GEAR, BALANCE WT	1	1	1			
21	5LP–11454–10	WEIGHT 1	1	1	1			
22	93311–62574	BEARING	1	1	1			
23	93306–30534	BEARING	1	1	1			

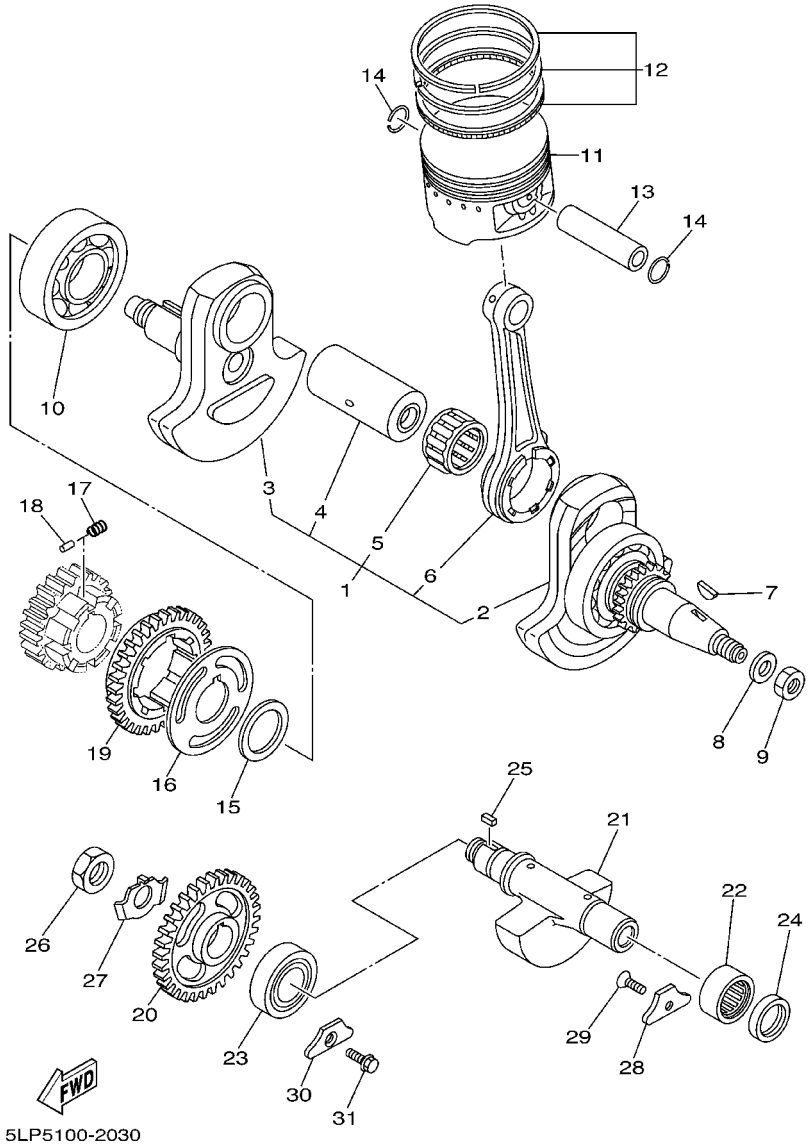

FIG. 3 CRANKSHAFT. PISTON

REF. NO.	PART NO.	DESCRIPTION	USA	CAN	FRA			REMARKS
24	93102–25064	OIL SEAL	1	1	1			
25	90282–05058	KEY, STRAIGHT	1	1	1			
26	90170–18003	NUT	1	1	1			
27	90215–18001	WASHER, LOCK	1	1	1			
28	5LP–15381–00	PLATE, BEARING COVER	1	1	1			
29	95027–06014	BOLT, FLANGE	1	1	1			
30	5LP–15381–00	PLATE, BEARING COVER	1	1	1			
31	95027–06014	BOLT, FLANGE	1	1	1			

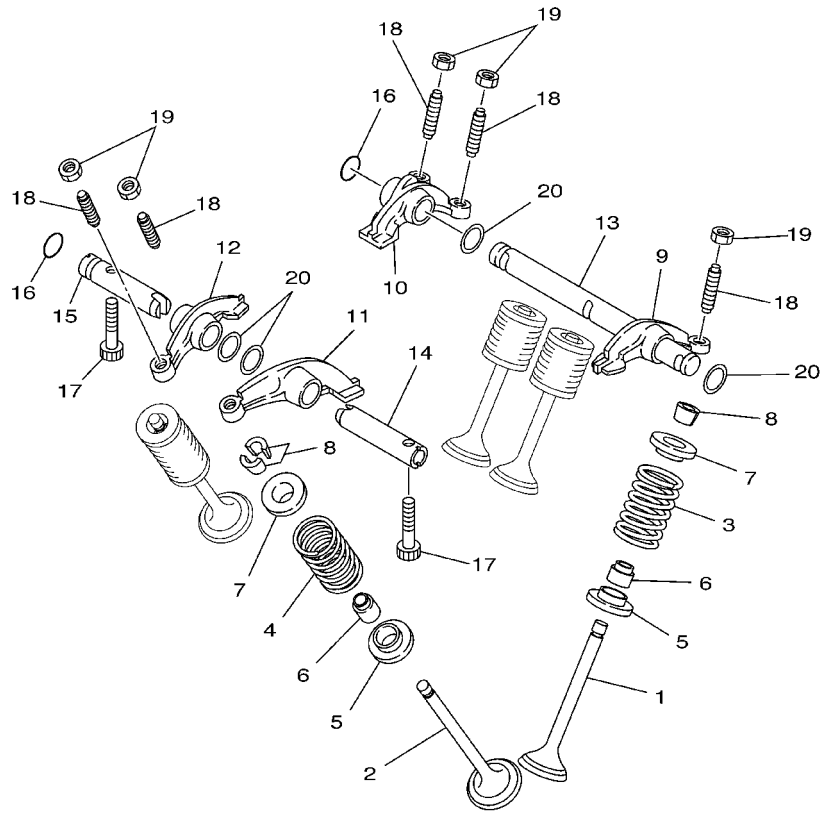

5LP1100-1040

FIG. 4 VALVE

REF. NO.	PART NO.	DESCRIPTION	USA	CAN	FRA			REMARKS
1	3YF–12111–00	VALVE, INTAKE	3	3	3			
2	3YF–12121–00	VALVE, EXHAUST	2	2	2			
3	5LP–12113–00	SPRING, VALVE INNER	3	3	3			
4	5LP–12114–00	SPRING, VALVE OUTER	2	2	2			
5	3YF–12116–00	SEAT, VALVE SPRING	5	5	5			
6	5H0–12119–00	SEAL, VALVE STEM	5	5	5			
7	3YF–12117–01	RETAINER, VALVE SPRING	5	5	5			
8	4G0–12118–00	COTTER, VALVE	10	10	10			
9	3YF–12151–00	ARM, VALVE ROCKER	1	1	1			
10	3YF–12161–00	ARM, VALVE ROCKER 2	1	1	1			
11	3YF–12162–00	ARM, VALVE ROCKER 3	1	1	1			
12	3YF–12163–00	ARM, VALVE ROCKER 4	1	1	1			
13	3YF–12146–00	SHAFT, ROCKER	1	1	1			
14	2NX–12156–00	SHAFT, ROCKER 2	1	1	1			
15	3YF–12166–00	SHAFT, ROCKER 3	1	1	1			
16	93210–08521	O–RING	2	2	2			
17	90109–063E8	BOLT	2	2	2			
18	2NX–12159–00	SCREW, VALVE ADJUSTING	5	5	5			
19	90170–06128	NUT	5	5	5			
20	90206–12075	WASHER, WAVE	4	4	4			

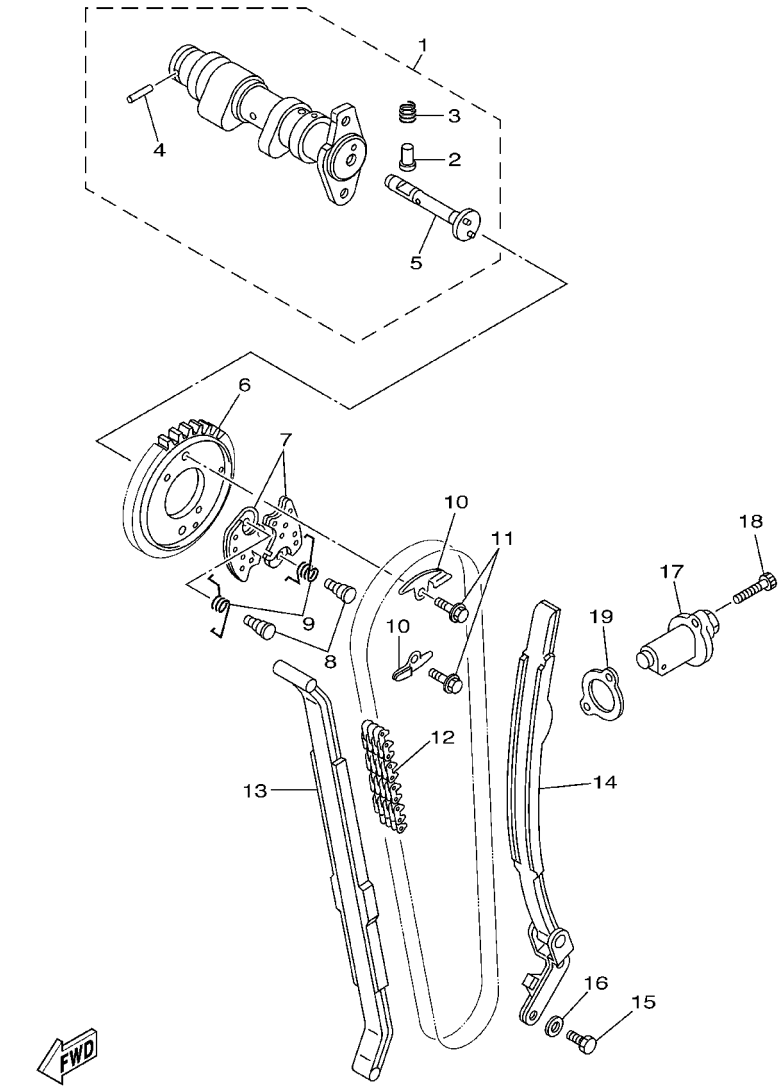

5LP1100-1050

FIG. 5 CAMSHAFT. CHAIN

REF. NO.	PART NO.	DESCRIPTION	USA	CAN	FRA			REMARKS
1	5LP–12170–00	CAMSHAFT ASSY 1	1	1	1			
2	3YF–12284–00	.PIN, DECOMPRESSION LEVER	1	1	1			
3	90501–05001	.SPRING, COMPRESSION	1	1	1			
4	93603–21180	.PIN, DOWEL	1	1	1			
5	3YF–12290–00	.LEVER, DECOMPRESSION SPRING	1	1	1			
6	3YF–12176–00	SPROCKET, CAM CHAIN	1	1	1			
7	3YF–12288–00	CAM, DECOMPRESSION	2	2	2			
8	3YF–12247–00	SHAFT, TENSIONER	2	2	2			
9	5KM–12216–00	SPRING	2	2	2			
10	3YF–12233–00	PLATE, GUIDE STOPPER 1	2	2	2			
11	90105–07342	BOLT, FLANGE	2	2	2			
12	94591–45126	CHAIN	1	1	1			
13	34K–12231–00	GUIDE, STOPPER 1	1	1	1			
14	34K–12241–00	GUIDE, STOPPER 2	1	1	1			
15	97027–06016	BOLT	2	2	2			
16	92907–06600	WASHER, PLATE	2	2	2			
17	3TB–12210–00	TENSIONER ASSY, CAM CHAIN	1	1	1			
18	91317–06025	BOLT	2	2	2			
19	4DW–12213–00	GASKET, TENSIONER CASE	1	1	1			

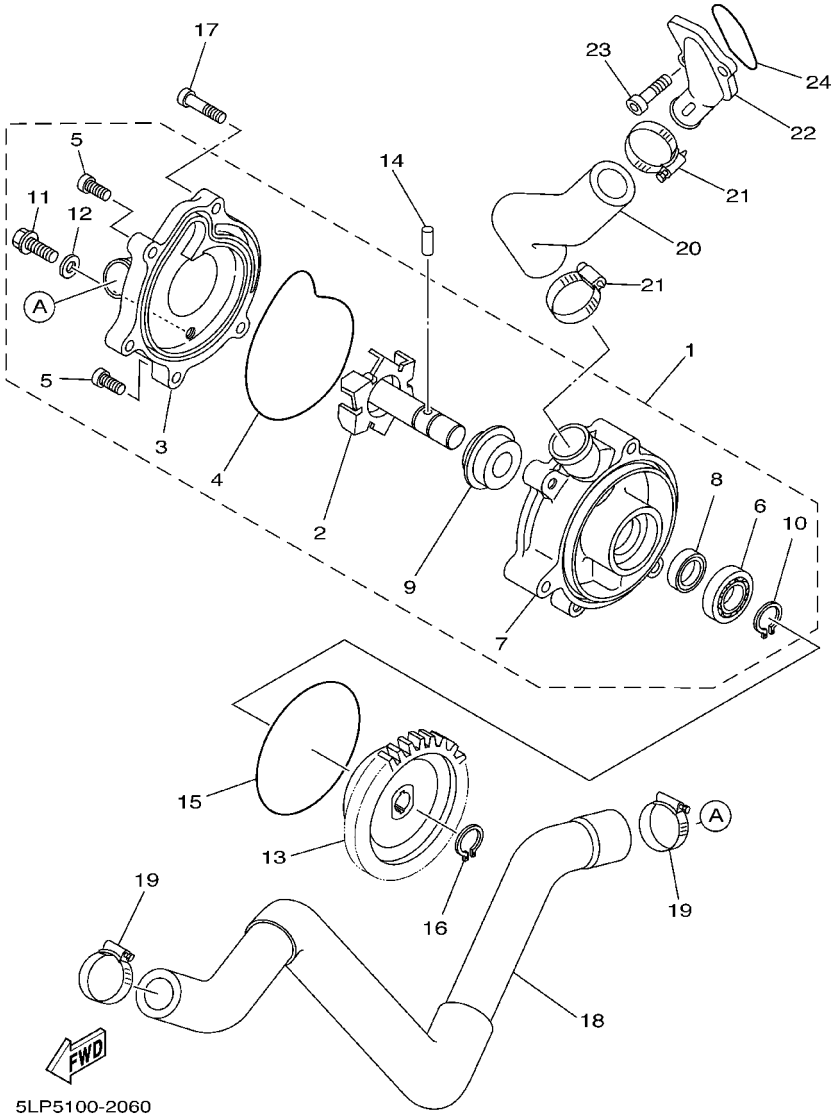

FIG. 6 WATER PUMP

REF. NO.	PART NO.	DESCRIPTION	USA	CAN	FRA			REMARKS
1	5LP–12420–00	WATER PUMP ASSY	1	1	1			
2	3YF–12450–00	.IMPELLER SHAFT ASSY	1	1	1			
3	5LP–12422–00	.COVER, HOUSING	1	1	1			
4	1WG–12439–00	.O–RING	1	1	1			
5	91317–06020	.BOLT	2	2	2			
6	93306–00106	.BEARING	1	1	1			
7	5LP–12421–00	.HOUSING, WATER PUMP	1	1	1			
8	93101–12173	.OIL SEAL	1	1	1			
9	11H–12438–10	.SEAL, MECHANICAL	1	1	1			
10	99009–12400	.CIRCLIP	1	1	1			
11	95027–06012	.BOLT, FLANGE	1	1	1			
12	90430–06014	.GASKET	1	1	1			
13	3YF–12459–00	GEAR, IMPELLER SHAFT	1	1	1			
14	93603–16219	PIN, DOWEL	1	1	1			
15	93210–77363	O–RING	1	1	1			
16	99009–12400	CIRCLIP	1	1	1			
17	91317–06045	BOLT	3	3	3			
18	5LP–12576–00	HOSE 1	1	1	1			
19	90450–32015	HOSE CLAMP ASSY	2	2	2			
20	5LP–12577–00	HOSE 2	1	1	1			
21	90450–32015	HOSE CLAMP ASSY	2	2	2			
22	3YF–12469–00	JOINT 1	1	1	1			
23	91317–06020	BOLT	2	2	2			
24	93210–33786	O–RING	1	1	1			

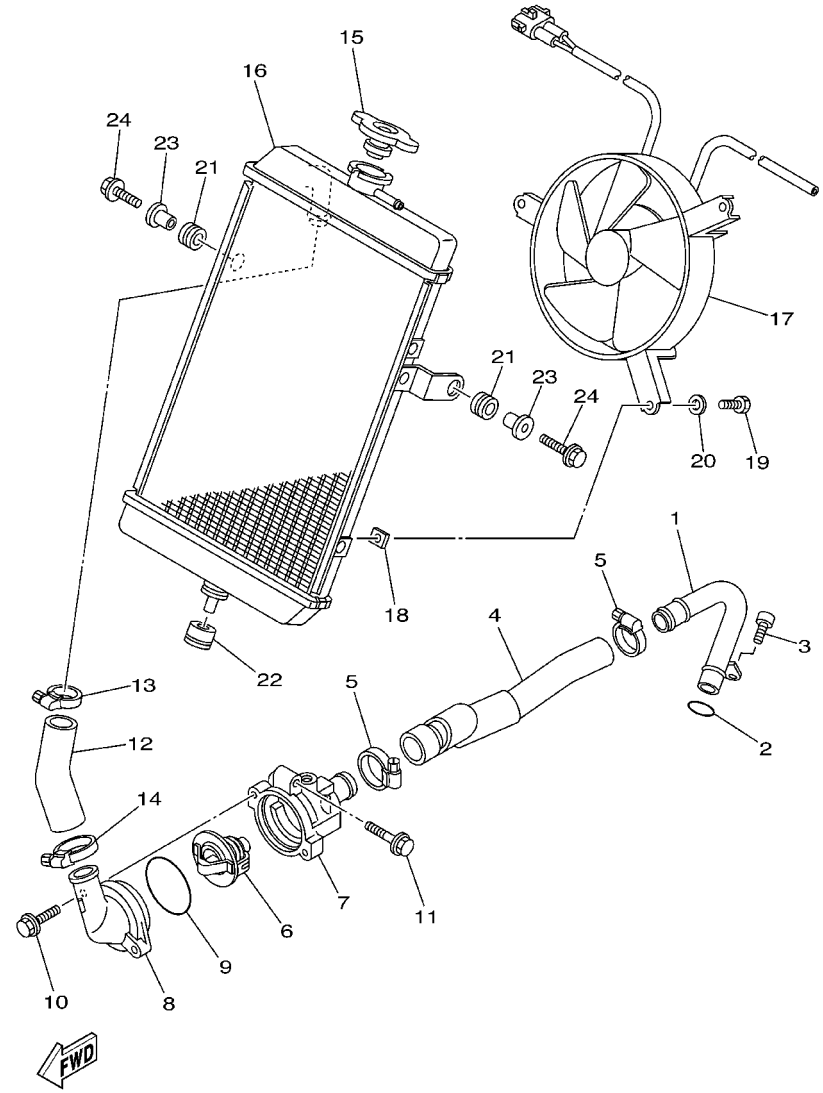

5LP1100-1070

FIG. 7 RADIATOR. HOSE

REF. NO.	PART NO.	DESCRIPTION	USA	CAN	FRA			REMARKS
1	5LP–12481–00	PIPE 1	1	1	1			
2	93210–18417	O–RING	1	1	1			
3	91317–06012	BOLT	1	1	1			
4	5LP–12578–00	HOSE 3	1	1	1			
5	90450–32015	HOSE CLAMP ASSY	2	2	2			
6	5LP–12411–00	THERMOSTAT	1	1	1			
7	5LP–12417–00	HOUSING, THERMOSTAT	1	1	1			
8	5LP–12413–00	COVER, THERMOSTAT	1	1	1			
9	93210–49046	O–RING	1	1	1			
10	95027–06020	BOLT, FLANGE	2	2	2			
11	95027–06025	BOLT, FLANGE	1	1	1			
12	5LP–12579–00	HOSE 4	1	1	1			
13	90450–32015	HOSE CLAMP ASSY	1	1	1			
14	90450–35001	HOSE CLAMP ASSY	1	1	1			
15	22W–12462–00	CAP, RADIATOR	1	1	1			
16	5LP–12461–00	RADIATOR ASSY	1	1	1			
17	5LP–12405–00	BLOWER ASSY	1	1	1			
18	1AA–12535–00	PLATE	3	3	3			
19	97017–06010	BOLT	3	3	3			
20	92907–06600	WASHER, PLATE	3	3	3			
21	90480–15470	GROMMET	2	2	2			
22	90480–18499	GROMMET	1	1	1			
23	90387–075U2	COLLAR	2	2	2			
24	95807–06025	BOLT, FLANGE	2	2	2			

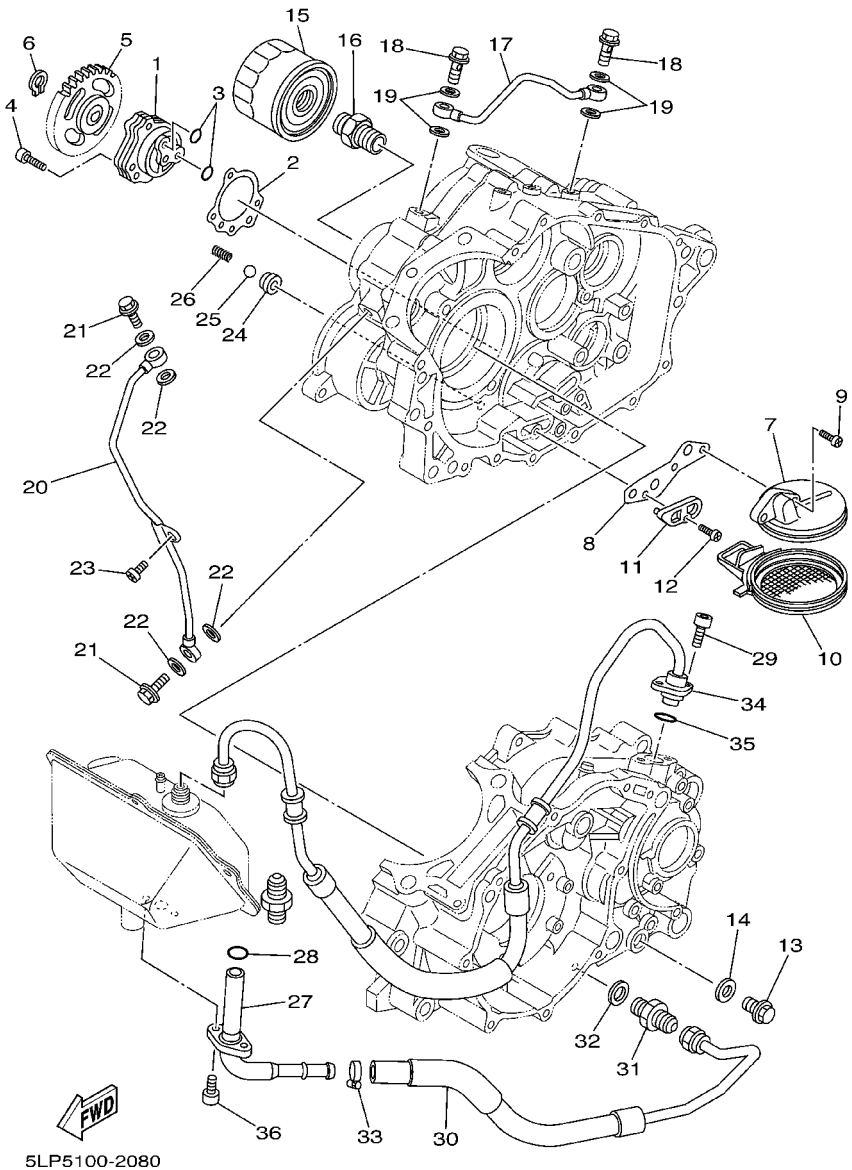

FIG. 8 OIL PUMP

REF. NO.	PART NO.	DESCRIPTION	USA	CAN	FRA			REMARKS
1	5LP–13300–00	OIL PUMP ASSY	1	1	1			
2	5LP–13329–00	GASKET, PUMP COVER	1	1	1			
3	93210–13361	O–RING	2	2	2			
4	91317–06035	BOLT	3	3	3			
5	3AJ–13325–00	GEAR, PUMP DRIVEN	1	1	1			
6	99009–11400	CIRCLIP	1	1	1			
7	5LP–13412–00	HOUSING, STRAINER	1	1	1			
8	5LP–13415–00	SEAL, OIL STRAINER	1	1	1			
9	98507–06016	SCREW, PAN HEAD	2	2	2			
10	5LP–13411–00	STRAINER, OIL	1	1	1			
11	5Y1–15427–01	COVER, CAP 2	1	1	1			
12	98507–06016	SCREW, PAN HEAD	1	1	1			
13	90340–14132	PLUG, STRAIGHT SCREW	1	1	1			
14	214–11198–01	GASKET	1	1	1			
15	5DM–13440–00	ELEMENT ASSY, OIL CLEANER	1	1	1			
16	90401–20145	BOLT, UNION	1	1	1			
17	5LP–13161–00	PIPE, DELIVERY 1	1	1	1			
18	90401–08133	BOLT, UNION	2	2	2			
19	90430–08204	GASKET	4	4	4			
20	3YF–13161–00	PIPE, DELIVERY 1	1	1	1			
21	90401–10096	BOLT, UNION	2	2	2			
22	90430–10188	GASKET	4	4	4			
23	91317–06012	BOLT	1	1	1			
24	583–13113–00	SEAT, CHECK BALL	1	1	1			
25	93503–08007	BALL	1	1	1			
26	90501–043E0	SPRING, COMPRESSION	1	1	1			
27	5LP–13416–00	PIPE, OIL 1	1	1	1			

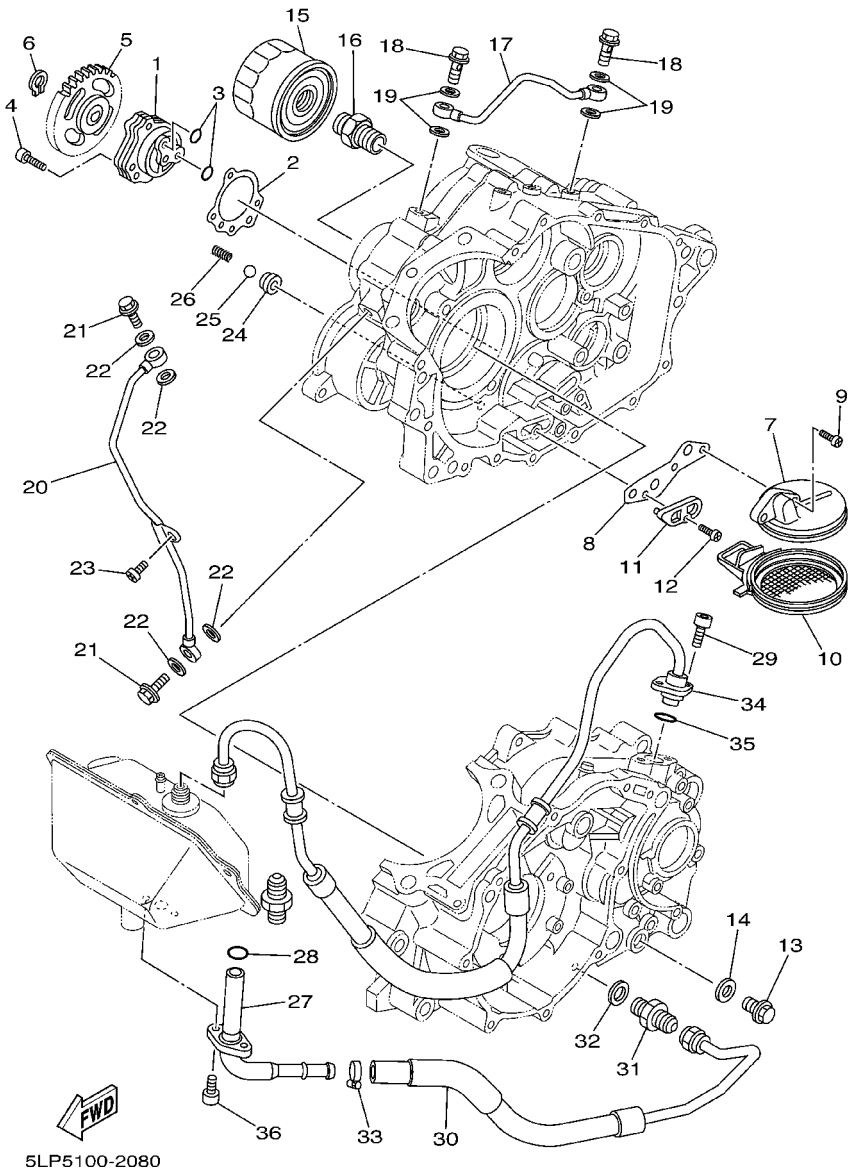

FIG. 8 OIL PUMP

REF. NO.	PART NO.	DESCRIPTION	USA	CAN	FRA			REMARKS
28	93210-16629	O-RING	1	1	1			
29	91317-06016	BOLT	2	2	2			
30	5LP-13464-00	HOSE, OIL 1	1	1	1			
31	51Y-13132-50	JOINT	1	1	1			
32	90430-14043	GASKET	1	1	1			
33	90450-22017	HOSE CLAMP ASSY	1	1	1			
34	5LP-13465-10	HOSE, OIL 2	1	1	1			
35	93210-15171	O-RING	1	1	1			
36	91317-06016	BOLT	2	2	2			

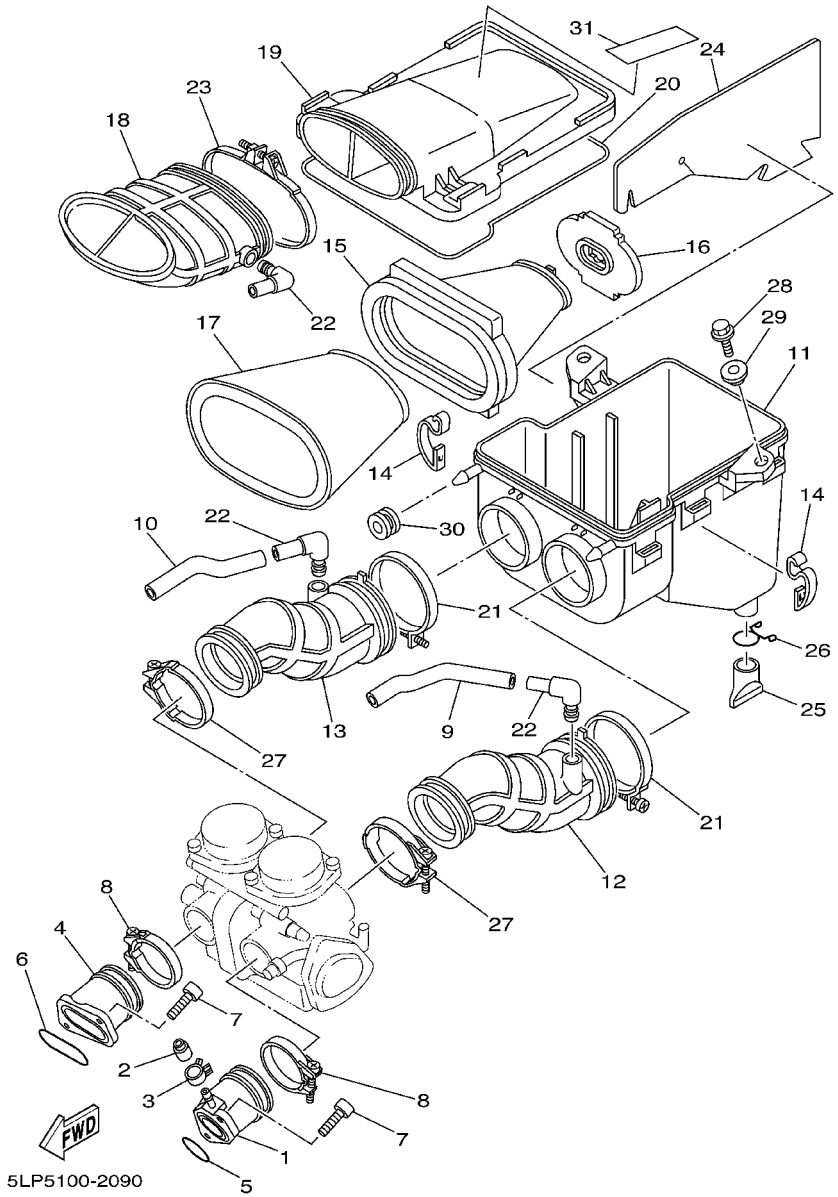

FIG. 9 INTAKE

REF. NO.	PART NO.	DESCRIPTION	USA	CAN	FRA			REMARKS
1	5LP–13586–01	JOINT, CARBURETOR 1	1	1	1			
2	16G–13569–00	PLUG, BLIND	1	1	1			
3	90467–10039	CLIP	1	1	1			
4	5LP–13596–01	JOINT, CARBURETOR 2	1	1	1			
5	93210–30611	O–RING	1	1	1			
6	93210–44545	O–RING	1	1	1			
7	91317–06020	BOLT	4	4	4			
8	90450–47001	HOSE CLAMP ASSY	2	2	2			
9	5LP–14197–00	PIPE	1	1	1			
10	5LP–14148–00	PIPE	1	1	1			
11	5LP–14411–01	CASE, AIR CLEANER 1	1	1	1			
12	5LP–14453–00	JOINT, AIR CLEANER 1	1	1	1			
13	5LP–14454–00	JOINT	1	1	1			
14	5GH–14436–00	HOOK	6	6	6			
15	5LP–14458–01	GUIDE	1	1	1			
16	2GU–14468–00	PLATE,ELEMENT FITTING	1	1	1			
17	5LP–14451–01	ELEMENT, AIR CLEANER	1	1	1			
18	5LP–14437–00	DUCT	1	1	1			
19	5LP–14412–00	CAP, CLEANER CASE 1	1	1	1			
20	3XV–14462–00	SEAL	1	1	1			
21	90460–68230	CLAMP, HOSE	2	2	2			
22	31A–14419–00	PIPE	3	3	3			
23	5LP–14455–00	BAND	1	1	1			
24	5LP–1442F–00	PROTECTOR	1	1	1			
25	59V–14457–00	SEAL	1	1	1			
26	90467–22080	CLIP	1	1	1			
27	90450–57044	HOSE CLAMP ASSY	2	2	2			

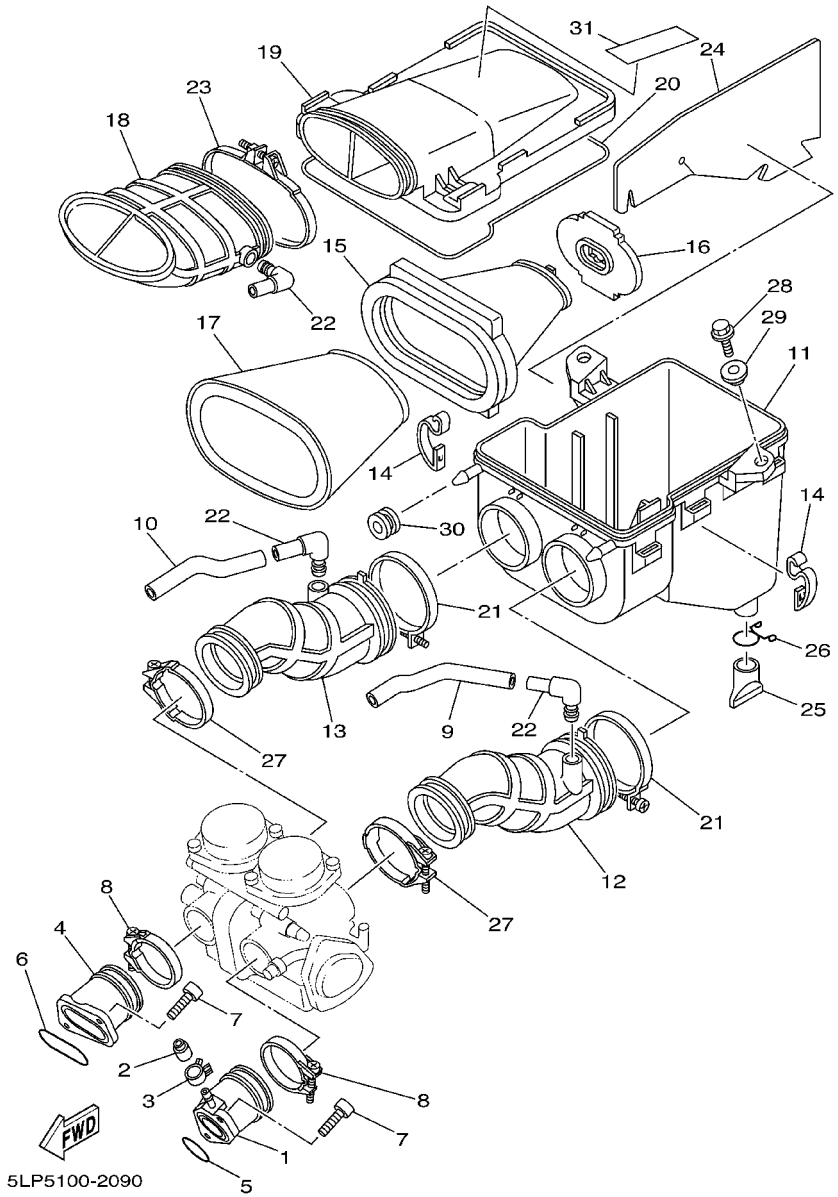

FIG. 9 INTAKE

REF. NO.	PART NO.	DESCRIPTION	USA	CAN	FRA			REMARKS
28	95827–06020	BOLT, FLANGE	2	2	2			
29	90387–07789	COLLAR	2	2	2			
30	90480–18001	GROMMET	2	2	2			
31	5LP–2179T–10	PLATE, EPA 3(CALIFORNIA)	1					FOR CALIFORNIA

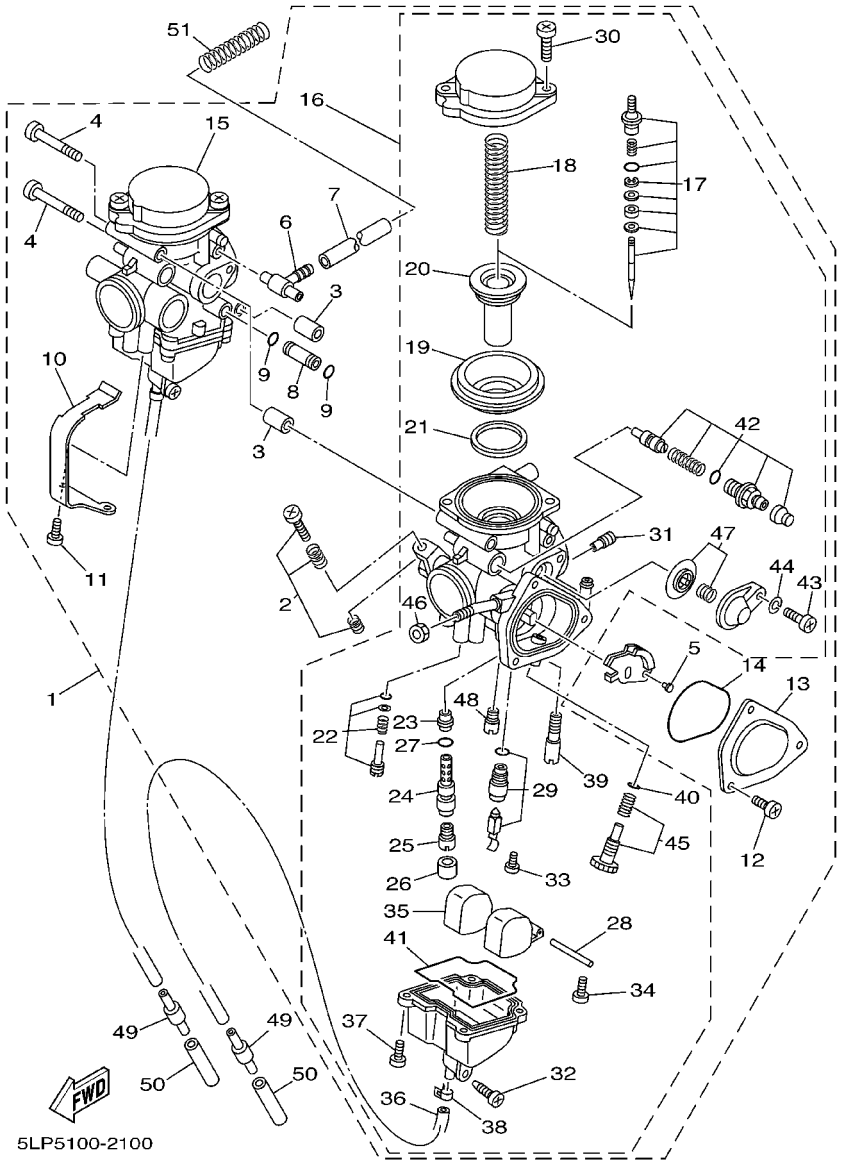

FIG. 10 CARBURETOR

REF. NO.	PART NO.	DESCRIPTION	USA	CAN	FRA			REMARKS
1	5LP–14900–20	CARBURETOR ASSY	1	1	1			
2	3EN–1490K–00	.STOP SCREW SET	1	1	1			
3	5LP–14996–00	.PIPE	2	2	2			
4	3LN–14216–00	.SCREW	2	2	2			
5	1UY–14155–00	.GUIDE, CABLE	1	1	1			
* 6	5EA–14167–00	.CONNECTOR	1	1	1			
7	5LP–14349–00	.PIPE	1	1	1			
8	5DM–14148–00	.PIPE	1	1	1			
9	36Y–14147–00	.O–RING	2	2	2			
10	5LP–14945–00	.PLATE	1	1	1			
11	3DM–14216–00	.SCREW	2	2	2			
12	98507–04006	.SCREW, PAN HEAD	3	3	3			
13	4WV–14293–00	.COVER 1	1	1	1			
14	4WV–14147–10	.O–RING	1	1	1			
15	5LP–14902–00	.CARBURETOR ASSY 2	1	1	1			
16	5LP–14901–00	.CARBURETOR ASSY 1	1	1	1			
17	5LP–1490J–00	..NEEDLE SET	2	2	2			
18	4KM–14933–00	..SPRING, DIAPHRAGM	2	2	2			
19	5GH–14940–10	..DIAPHRAGM ASSY	2	2	2			
20	5LP–14112–00	..VALVE, THROTTLE 1	2	2	2			
21	5LP–14918–00	..RING	2	2	2			
22	5LP–14105–00	..PILOT SCREW SET	1	1	1			FOR 14901
	5LP–14105–10	..PILOT SCREW SET	1	1	1			FOR 14902
23	5DM–14141–46	..NOZZLE, MAIN	2	2	2			
24	5GH–14261–10	..HOLDER	2	2	2			
25	3G2–14231–28	..JET, MAIN (#140)	1	1	1			UR FOR 14901
	3G2–14231–29	..JET, MAIN (#145)	1	1	1			UR FOR 14902

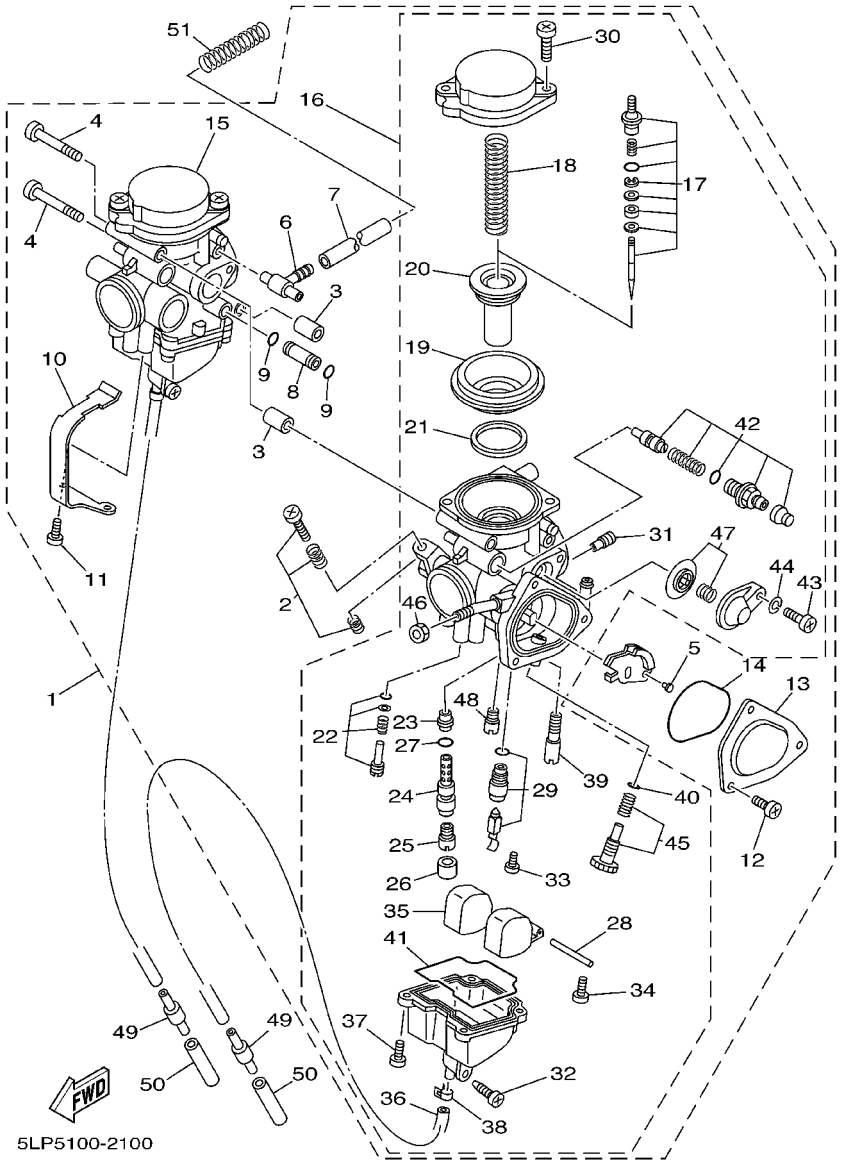

FIG. 10 CARBURETOR

REF. NO.	PART NO.	DESCRIPTION	USA	CAN	FRA			REMARKS
26	5GH–14918–00	..RING	2	2	2			
27	583–14561–00	..O–RING	2	2	2			
28	127–14186–00	..PIN, FLOAT	2	2	2			
29	5LP–14107–20	..NEEDLE VALVE SET	2	2	2			
30	4KM–14216–00	..SCREW	4	4	4			
31	1HX–14231–16	..JET, MAIN (# 80)	1	1	1			UR FOR 14901
	1HX–14231–30	..JET, MAIN (#150)	1	1	1			UR FOR 14902
32	12R–14191–00	..PLUG, DRAIN	2	2	2			
33	98507–04008	..SCREW, PAN HEAD	2	2	2			
34	1FN–14565–00	..SCREW	2	2	2			
35	5DM–14985–00	..FLOAT	2	2	2			
36	4KB–14193–20	..PIPE	2	2	2			
37	98580–04010	..SCREW, PAN HEAD	8	8	8			
38	90467–06194	..CLIP	2	2	2			
39	4KM–14142–22	..JET, PILOT (# 22.5)	2	2	2			
40	812–14147–00	..O–RING	2	2	2			
41	5DM–14561–00	..O–RING	2	2	2			
42	5GH–1410A–00	..STARTER SET	1	1	1			FOR 14901
43	98507–04014	..SCREW, PAN HEAD	2	2	2			
44	92907–04100	..WASHER, SPRING	2	2	2			
45	5LP–14103–00	..THROTTLE SCREW SET	1	1	1			FOR 14901
46	522–14161–00	..NUT, CABLE ADJUSTING	1	1	1			FOR 14901
47	5EL–1490H–00	..DIAPHRAGM SET 5	1	1	1			FOR 14901
48	3G2–14231–19	..JET, MAIN (# 95)	1	1	1			FOR 14901
49	24W–14193–00	PIPE	2	2	2			
50	91A20–07004	TUBE, FLEXIBLE VINYL	2	2	2			
51	90501–08430	SPRING, COMPRESSION	1	1	1			

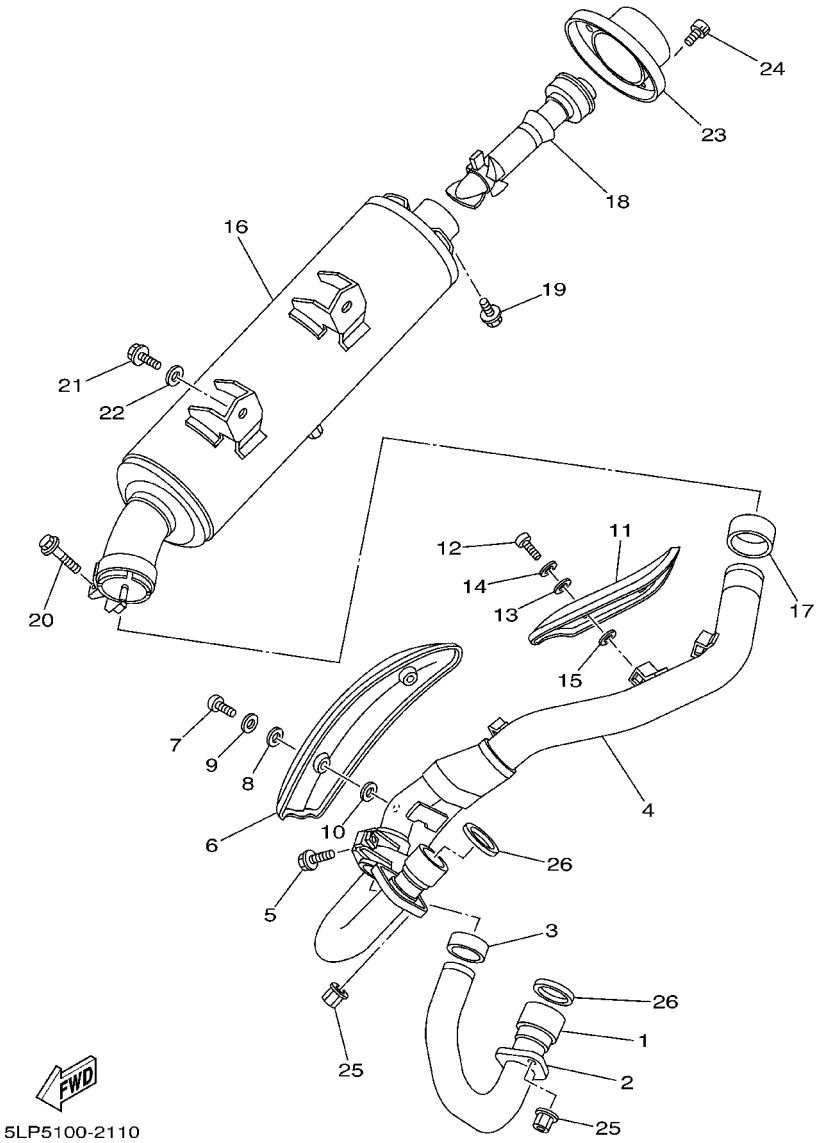

FIG. 11 EXHAUST

REF. NO.	PART NO.	DESCRIPTION	USA	CAN	FRA			REMARKS
1	5LP–14611–00	PIPE, EXHAUST 1	1	1	1			
2	3YF–14612–00	NUT, RING	1	1	1			
3	3YF–14714–00	GASKET, MUFFLER	1	1	1			
4	5LP–14621–00	PIPE, EXHAUST 2	1	1	1			
5	95027–08025	BOLT, FLANGE	1	1	1			
6	5LP–14628–00	PROTECTOR, EXHAUST PIPE	1	1	1			
7	92014–06012	BOLT, BUTTON HEAD	2	2	2			
8	4BD–14766–00	WASHER, PROTECTOR	2	2	2			
9	92990–06200	YBS66–6 WASHER, PLAIN	2	2	2			
10	5LP–14766–00	WASHER, PROTECTOR	2	2	2			
11	5LP–14728–00	PROTECTOR, MUFFLER 2	1	1	1			
12	92017–06010	BOLT, BUTTON HEAD	2	2	2			
13	4BD–14766–00	WASHER, PROTECTOR	2	2	2			
14	92907–06200	WASHER	2	2	2			
15	4BD–14766–00	WASHER, PROTECTOR	2	2	2			
16	5LP–14711–10	MUFFLER 1	1	1	1			
17	5LP–14714–00	GASKET, MUFFLER	1	1	1			
18	5LP–14752–00	PIPE, OUTLET	1	1	1			
19	95027–06008	BOLT, FLANGE	1	1	1			
20	95817–08035	BOLT, FLANGE	1	1	1			
21	90105–082A0	BOLT, FLANGE	2	2	2			
22	90201–08326	WASHER, PLATE	2	2	2			
23	5LP–14787–10	CAP, SILENCER	1	1	1			
24	90110–06134	BOLT, HEXAGON SOCKET HEAD	3	3	3			
25	90179–06668	NUT	4	4	4			
26	3YF–14613–01	GASKET, EXHAUST PIPE	2	2	2			

FIG. 12 CRANKCASE

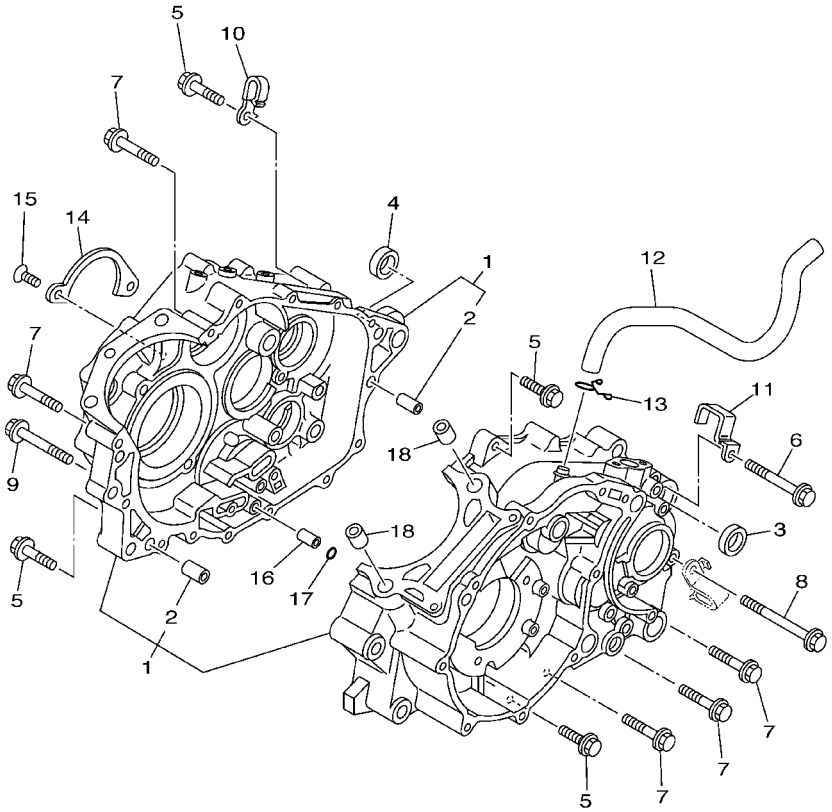

REF. NO.	PART NO.	DESCRIPTION	USA	CAN	FRA			REMARKS
1	5LP–15100–02	CRANKCASE ASSY	1	1	1			
2	99530–12016	.PIN, DOWEL	2	2	2			
3	90387–17783	COLLAR	1	1	1			
4	90387–17783	COLLAR	1	1	1			
5	95027–06030	BOLT, FLANGE	6	6	6			
6	95027–06065	BOLT, FLANGE	1	1	1			
7	95027–06045	BOLT, FLANGE	5	5	5			
8	95027–06080	BOLT, FLANGE	1	1	1			
9	95027–06060	BOLT, FLANGE	1	1	1			
10	90465–08125	CLAMP	1	1	1			
11	5LP–15484–00	CLAMP 2	1	1	1			
12	5LP–11166–00	PIPE, BREATHER 1	1	1	1			
13	90467–14015	CLIP	1	1	1			
14	3Y1–15383–00	PLATE, BEARING COVER	1	1	1			
15	98707–06012	SCREW, FLAT HEAD	2	2	2			
16	99530–08016	PIN, DOWEL	1	1	1			
17	93210–07135	O–RING	1	1	1			
18	99530–14016	PIN, DOWEL	2	2	2			

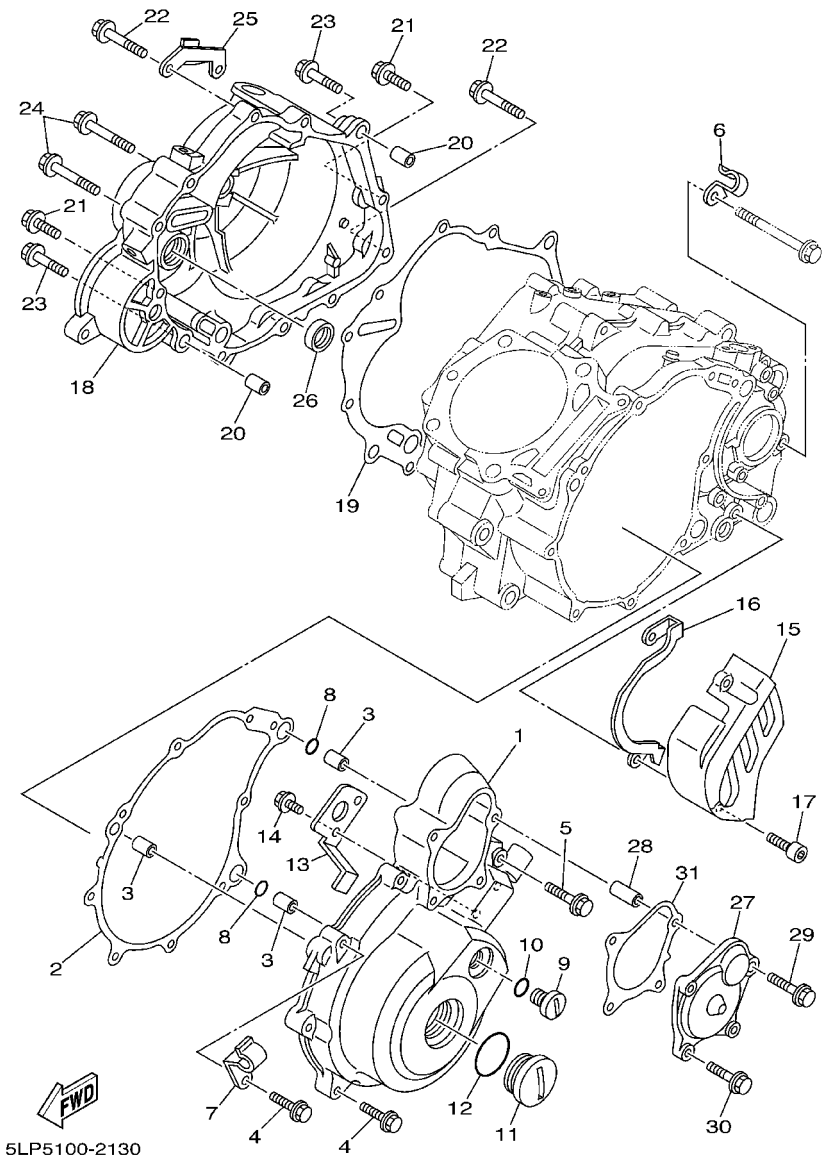

FIG. 13 CRANKCASE COVER 1

REF. NO.	PART NO.	DESCRIPTION	USA	CAN	FRA			REMARKS
1	5LP–15411–00	COVER, CRANKCASE 1	1	1	1			
2	5LP–15451–00	GASKET, CRANKCASE COVER 1	1	1	1			
3	99530–12016	PIN, DOWEL	3	3	3			
4	95027–06030	BOLT, FLANGE	5	5	5			
5	90105–06032	BOLT, FLANGE	4	4	4			
6	90465–08122	CLAMP	1	1	1			
7	5LP–13487–00	GUIDE, OIL HOSE	1	1	1			
8	93210–13361	O–RING	2	2	2			
9	90340–14128	PLUG, STRAIGHT SCREW	1	1	1			
10	93210–14369	O–RING	1	1	1			
11	90340–36121	PLUG, STRAIGHT SCREW	1	1	1			
12	93210–357A3	O–RING	1	1	1			
13	5LP–15113–00	PLATE	1	1	1			
14	95027–06014	BOLT, FLANGE	2	2	2			
15	5LP–15421–01	COVER, CRANKCASE 2	1	1	1			
16	5LP–17466–00	GUIDE, CHAIN	1	1	1			
17	91317–06025	BOLT	2	2	2			
18	5LP–15431–00	COVER, CRANKCASE 3	1	1	1			
19	5LP–15462–00	GASKET, CRANKCASE COVER 3	1	1	1			
20	99530–12016	PIN, DOWEL	2	2	2			
21	95027–06025	BOLT, FLANGE	5	5	5			
22	95027–06030	BOLT, FLANGE	3	3	3			
23	95027–06035	BOLT, FLANGE	2	2	2			
24	95027–06050	BOLT, FLANGE	2	2	2			
25	5LP–15441–00	HOLDER, CLUTCH CABLE	1	1	1			
26	93101–14092	OIL SEAL (S7–14–25–5.5–1–HS)	1	1	1			
27	5LP–15415–00	COVER, GENERATOR	1	1	1			

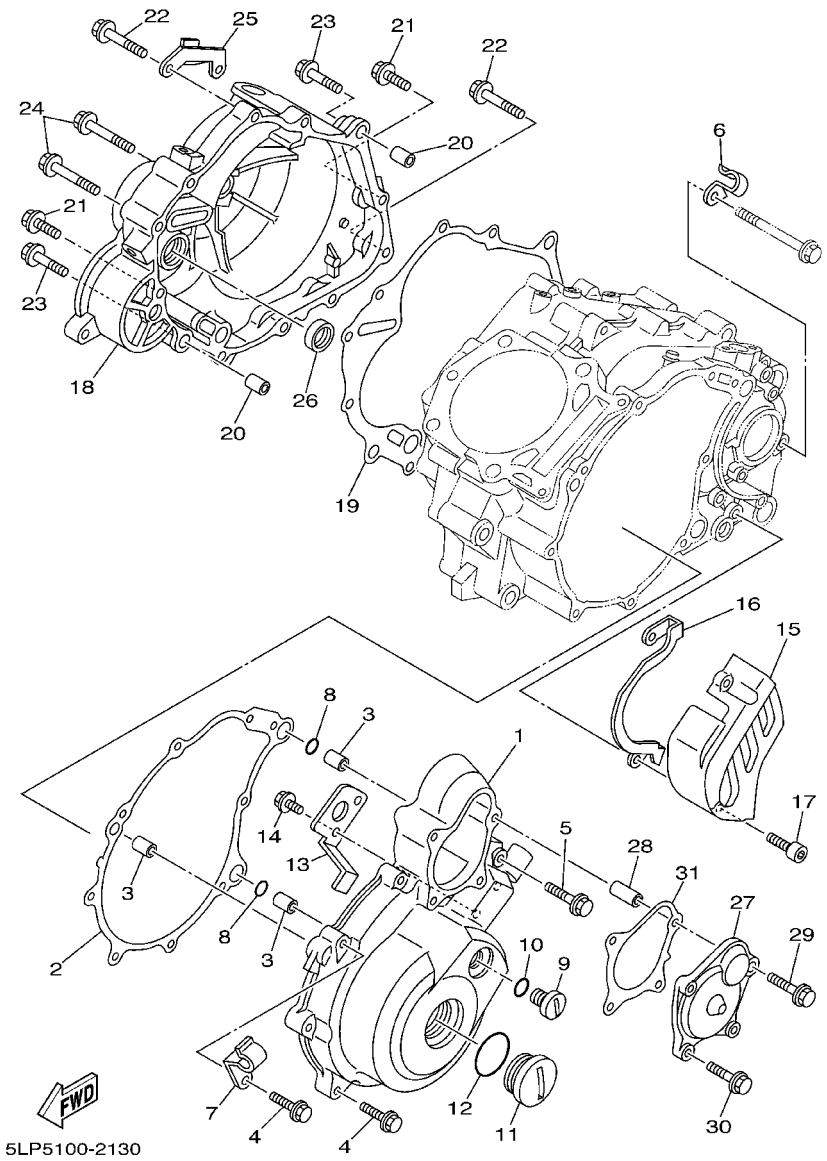

FIG. 13 CRANKCASE COVER 1

REF. NO.	PART NO.	DESCRIPTION	USA	CAN	FRA			REMARKS
28	99530–08016	PIN, DOWEL	1	1	1			
29	95027–06035	BOLT, FLANGE	1	1	1			
30	95027–06025	BOLT, FLANGE	3	3	3			
31	5LP–15455–00	GASKET 1	1	1	1			

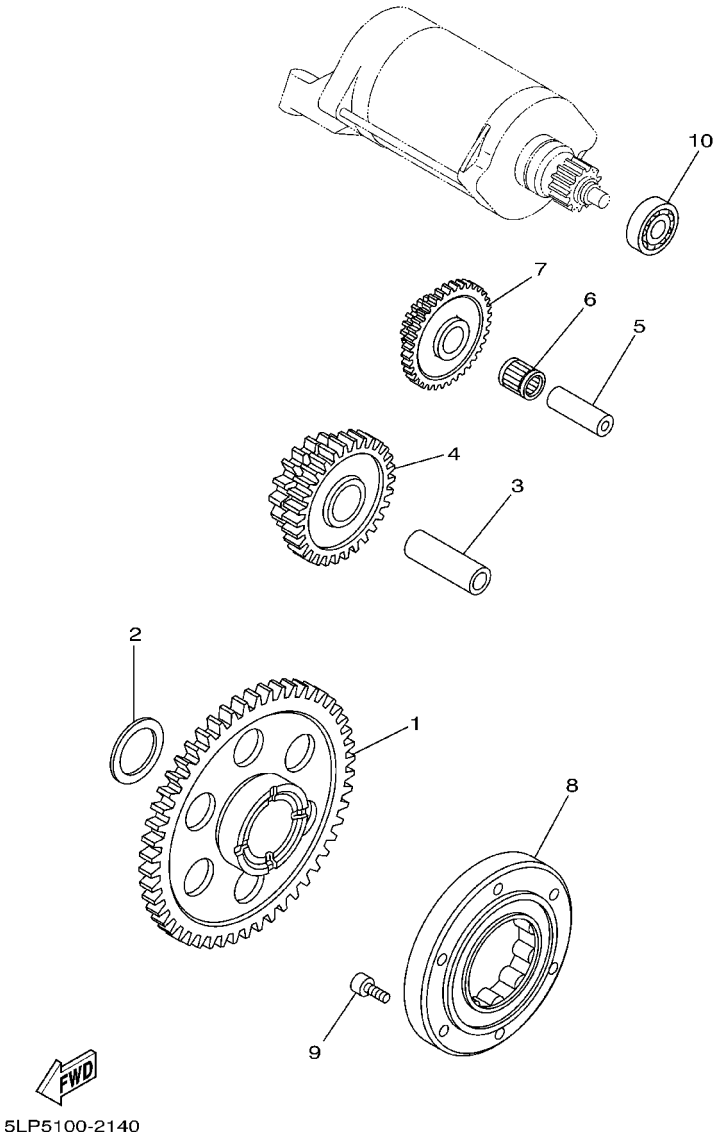

FIG. 14 STARTER

REF. NO.	PART NO.	DESCRIPTION	USA	CAN	FRA			REMARKS
1	5LP–15515–10	GEAR 3 (52T)	1	1	1			
2	90201–286K9	WASHER, PLATE	1	1	1			
3	1VJ–15522–00	SHAFT 2	1	1	1			
4	5LP–15517–10	GEAR, ILDER 2 (32/17T)	1	1	1			
5	1VJ–15521–00	SHAFT 1	1	1	1			
6	93310–212R6	BEARING	1	1	1			
7	1VJ–15512–00	GEAR, IDLER 1	1	1	1			
8	5LP–15590–00	STARTER ONE–WAY ASSY	1	1	1			
9	91317–06014	BOLT	6	6	6			
10	93306–20006	BEARING (B6200)	1	1	1			NTN

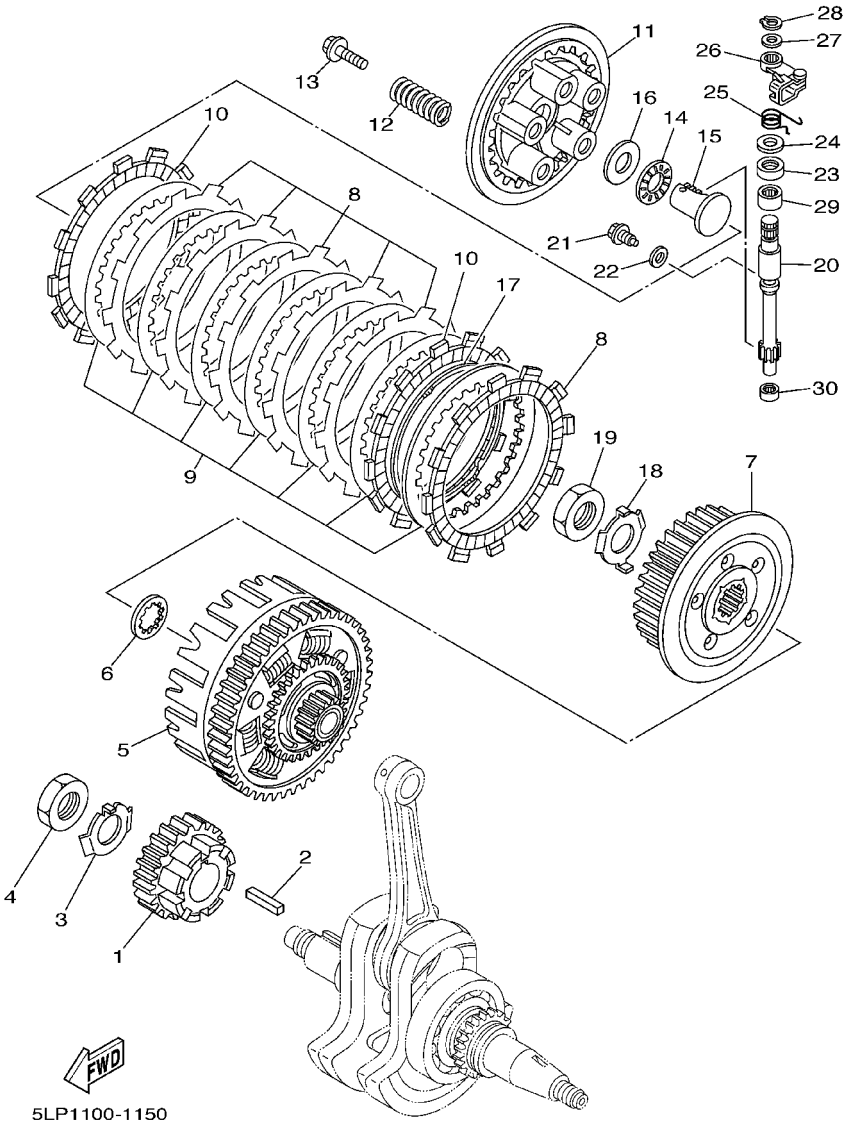

FIG. 15 CLUTCH

REF. NO.	PART NO.	DESCRIPTION	USA	CAN	FRA			REMARKS
1	5LP–16111–10	GEAR, PRIMARY DRIVE	1	1	1			
2	90282–07042	KEY, STRAIGHT	1	1	1			
3	90215–20197	WASHER, LOCK	1	1	1			
4	90170–20274	NUT	1	1	1			
5	3AJ–16150–00	PRIMARY DRIVEN GEAR COMP.(71T)	1	1	1			
6	2JN–16154–00	PLATE, THRUST 1	1	1	1			
7	4PT–16371–00	BOSS, CLUTCH	1	1	1			
8	5Y1–16321–00	PLATE, FRICTION	6	6	6			
9	360–16325–00	PLATE, CLUTCH 2	7	7	7			
10	5Y1–16331–01	PLATE, FRICTION 2	2	2	2			
11	3YF–16351–00	PLATE, PRESSURE 1	1	1	1			
12	90501–23142	SPRING, COMPRESSION	5	5	5			
13	90159–06092	SCREW, WITH WASHER	5	5	5			
14	93340–21505	BEARING	1	1	1			
15	4H7–16356–01	ROD, PUSH 1	1	1	1			
16	90201–150U6	WASHER, PLATE	1	1	1			
17	5Y1–16383–00	SPRING, CLUTCH BOSS	1	1	1			
18	90215–20231	WASHER, LOCK	1	1	1			
19	90170–20327	NUT	1	1	1			
20	3JD–16382–00	AXLE, PUSH LEVER	1	1	1			
21	90109–06418	BOLT	1	1	1			
22	90430–06014	GASKET	1	1	1			
23	93102–15212	OIL SEAL	1	1	1			
24	90201–15785	WASHER, PLATE	1	1	1			
25	90508–20016	SPRING, TORSION	1	1	1			
26	3LD–16340–01	PUSH LEVER ASSY	1	1	1			
27	90201–10119	WASHER, PLATE	1	1	1			

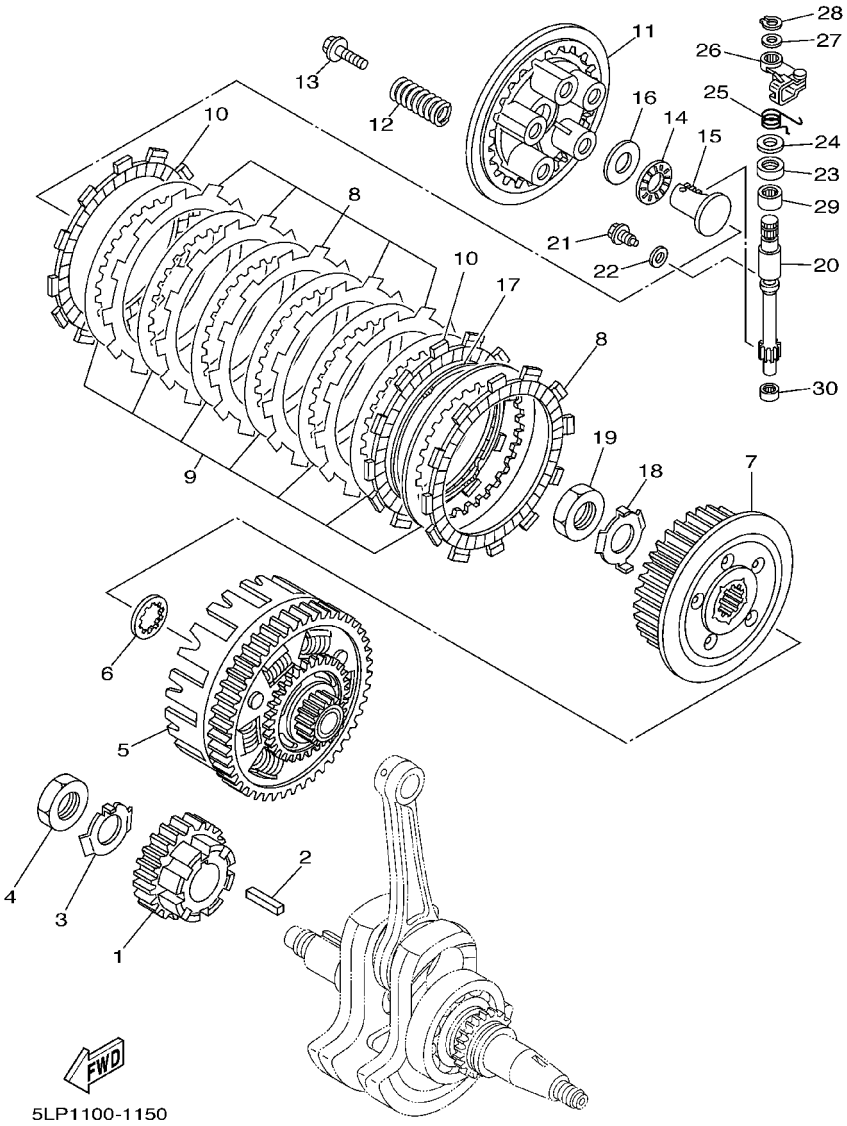

FIG. 15 CLUTCH

REF. NO.	PART NO.	DESCRIPTION	USA	CAN	FRA			REMARKS
28	99009–10400	CIRCLIP	1	1	1			
29	93315–31502	BEARING	1	1	1			
30	93315–10838	BEARING	1	1	1			

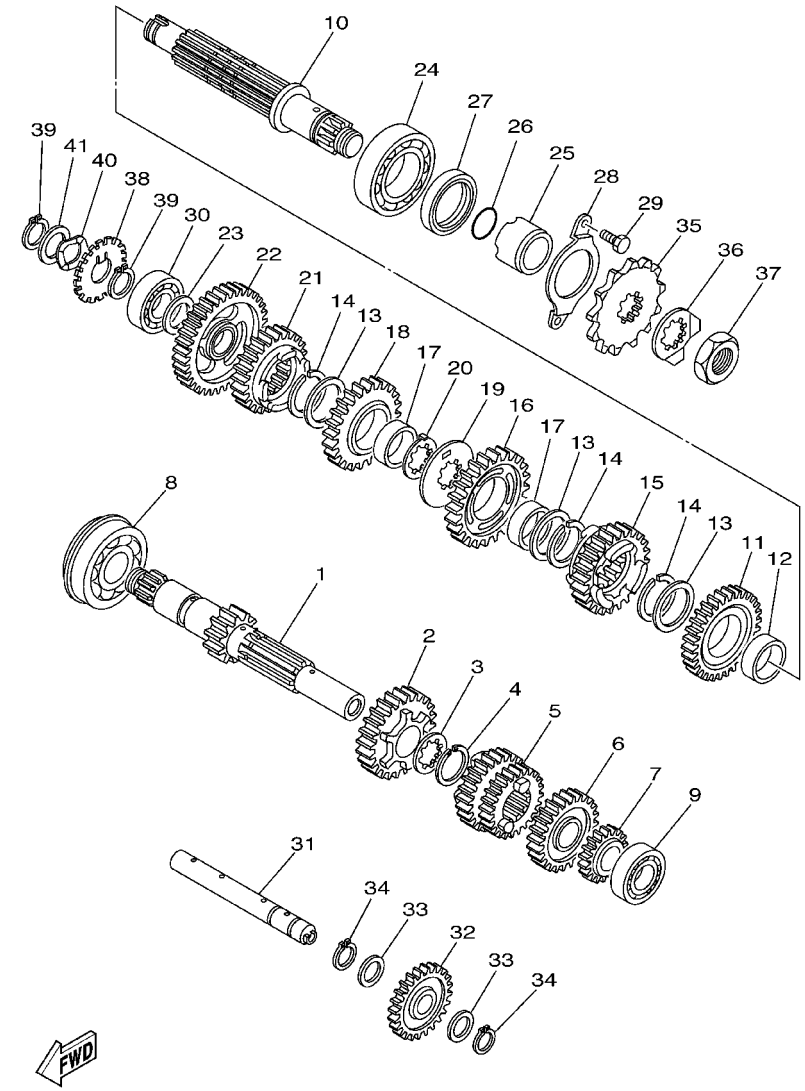

FIG. 16 TRANSMISSION

REF. NO.	PART NO.	DESCRIPTION	USA	CAN	FRA			REMARKS
1	5LP–17401–10	AXLE, MAIN (12T)	1	1	1			
2	5LP–17151–00	GEAR, 5TH PINION (21T)	1	1	1			
3	90209–21332	WASHER	1	1	1			
4	93440–25084	CIRCLIP	1	1	1			
5	5LP–17121–10	GEAR, 2ND PINION (18/21T)	1	1	1			
6	5LP–17141–10	GEAR, 4TH PINION (21T)	1	1	1			
7	5LP–17143–10	GEAR, REVERSE PINION (18T)	1	1	1			
8	93306–30540	BEARING (6305NRX1C3)	1	1	1			
9	93306–00428	BEARING	1	1	1			
10	5LP–17421–00	AXLE, DRIVE	1	1	1			
11	5LP–17243–10	GEAR, REVERSE WHEEL (33T)	1	1	1			
12	90387–2813C	COLLAR	1	1	1			
13	90209–25342	WASHER	3	3	3			
14	93440–28062	CIRCLIP	3	3	3			
15	5LP–17241–10	GEAR, 4TH WHEEL (22T)	1	1	1			
16	5LP–17221–10	GEAR, 2ND WHEEL (30T)	1	1	1			
17	90387–2813D	COLLAR	2	2	2			
18	5LP–17231–10	GEAR, 3RD WHEEL (27T)	1	1	1			
19	90209–25349	WASHER	1	1	1			
20	90209–25350	WASHER	1	1	1			
21	5LP–17251–10	GEAR, 5TH WHEEL (19T)	1	1	1			
22	5LP–17211–10	GEAR, 1ST WHEEL (31T)	1	1	1			
23	90201–20276	WASHER, PLATE (T=1.0)	1	1	1			
24	93306–30535	BEARING	1	1	1			
25	90387–2505V	COLLAR	1	1	1			
26	93210–22298	O–RING	1	1	1			
27	93102–35393	OIL SEAL	1	1	1			

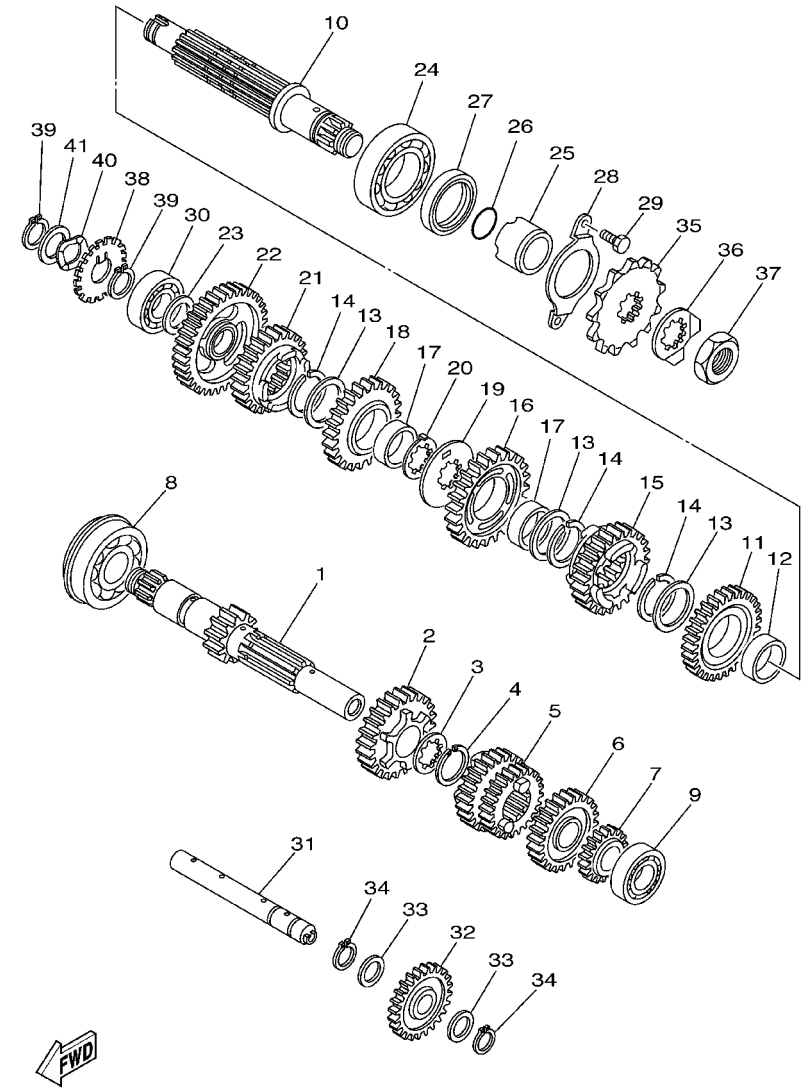

FIG. 16 TRANSMISSION

REF. NO.	PART NO.	DESCRIPTION	USA	CAN	FRA			REMARKS
28	5LP-17471-00	PLATE, COVER	1	1	1			
29	97027-06014	BOLT	2	2	2			
30	93306-00426	BEARING	1	1	1			
31	5LP-17432-00	AXLE, IDLE	1	1	1			
32	5LP-17281-10	GEAR, DRIVE 1	1	1	1			
33	90201-150U6	WASHER, PLATE	2	2	2			
34	93440-15012	CIRCLIP	2	2	2			
35	9383E-13216	SPROCKET, DRIVE (13T)	1	1	1			
36	90215-21256	WASHER, LOCK	1	1	1			
37	90179-18020	NUT	1	1	1			
38	5LP-17446-00	PLATE	1	1	1			
39	99009-20400	CIRCLIP	2	2	2			
40	90206-20037	WASHER, WAVE	1	1	1			
41	90201-20276	WASHER, PLATE (T=1.0)	1	1	1			

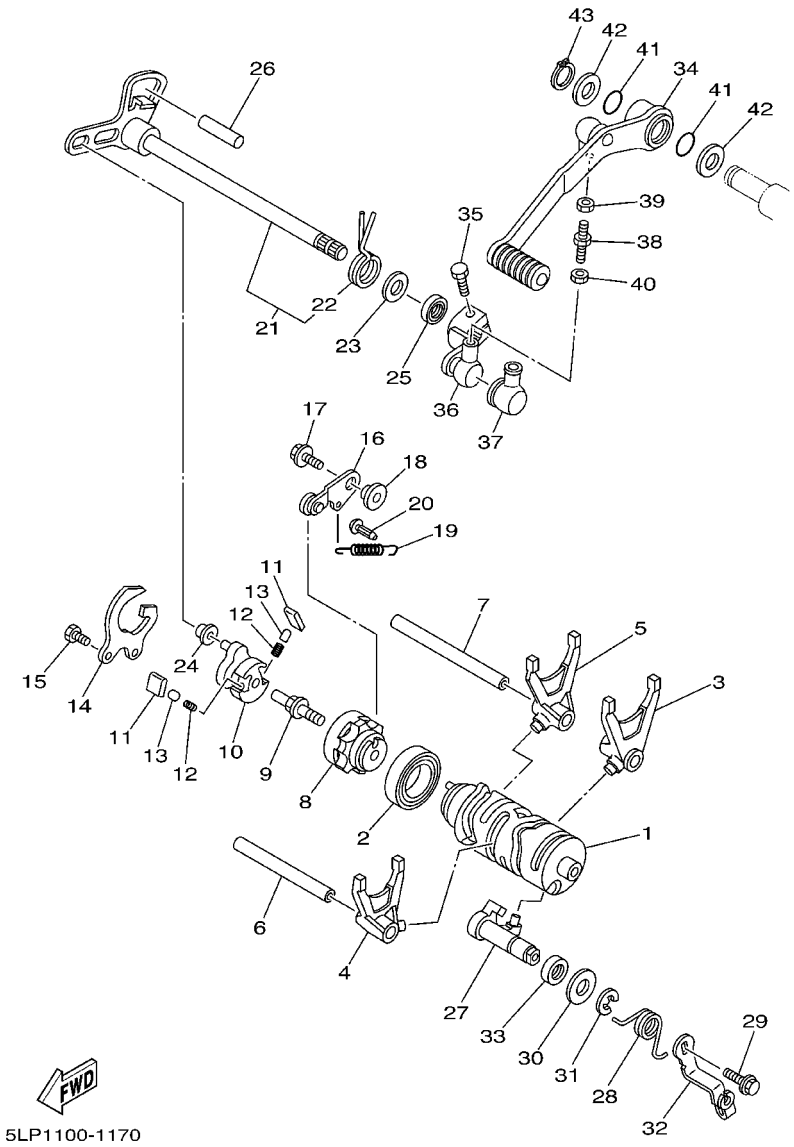

FIG. 17 SHIFT CAM. FORK

REF. NO.	PART NO.	DESCRIPTION	USA	CAN	FRA			REMARKS
1	5LP–18541–00	CAM, SHIFT	1	1	1			
2	93306–90501	BEARING	1	1	1			
3	5LP–18511–00	FORK, SHIFT 1	1	1	1			
4	5LP–18512–10	FORK, SHIFT 2	1	1	1			
5	5LP–18513–00	FORK, SHIFT 3	1	1	1			
6	3GX–18531–00	BAR, SHIFT FORK GUIDE 1	1	1	1			
7	4TR–18535–00	BAR, SHIFT FORK GUIDE 2	1	1	1			
8	4EW–18185–00	SEGMENT	1	1	1			
9	3XJ–18173–00	PIN, SHIFT	1	1	1			
10	5LP–18122–00	LEVER, SHIFT 2	1	1	1			
11	3XJ–18182–00	PAWL, SHIFTER	2	2	2			
12	90501–052G5	SPRING, COMPRESSION	2	2	2			
13	3XJ–18184–00	PIN, PAWL	2	2	2			
14	5LP–18172–00	GUIDE, SHIFT	1	1	1			
15	90101–06664	BOLT	2	2	2			
16	5LP–18140–00	STOPPER LEVER ASSY	1	1	1			
17	90159–06078	SCREW, WITH WASHER	1	1	1			
18	4NX–18175–00	SPACER	1	1	1			
19	90506–14005	SPRING, TENSION	1	1	1			
20	132–16346–00	HOOK, SPRING	1	1	1			
21	5LP–18101–00	SHIFT SHAFT ASSY	1	1	1			
22	90508–35007	.SPRING, TORSION	1	1	1			
23	90201–12474	WASHER, PLATE	1	1	1			
24	3XJ–18178–00	ROLLER, SHIFT LEVER	1	1	1			
25	93102–12106	OIL SEAL (SD 12–22–5 HS)	1	1	1			
26	93608–33046	PIN, DOWEL	1	1	1			
27	5LP–18380–00	SHIFTER BRKT. ASSY	1	1	1			

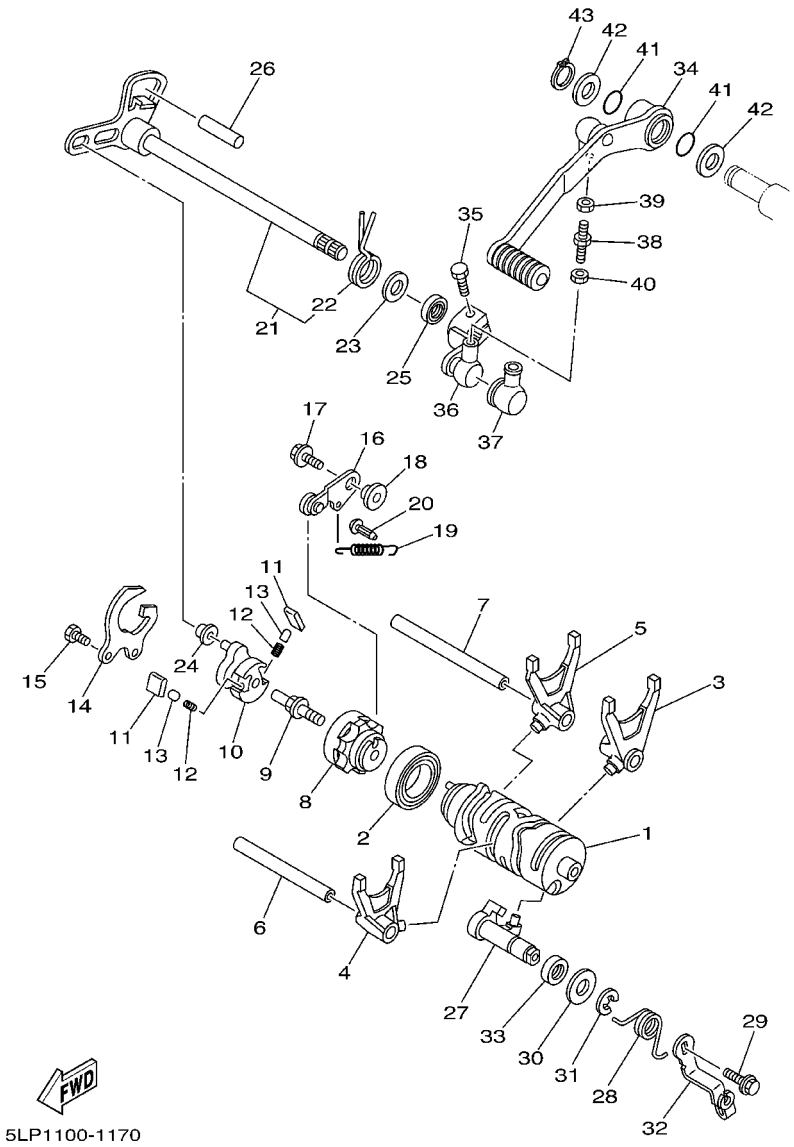

FIG. 17 SHIFT CAM. FORK

REF. NO.	PART NO.	DESCRIPTION	USA	CAN	FRA			REMARKS
28	5LP-18337-00	SPRING	1	1	1			
29	95817-06012	BOLT, FLANGE	1	1	1			
30	90201-12575	WASHER, PLATE	1	1	1			
31	99001-10600	CIRCLIP	1	1	1			
32	5LP-18431-00	BRACKET, SHIFTER	1	1	1			
33	93102-12106	OIL SEAL (SD 12-22-5 HS)	1	1	1			
34	5LP-18110-00	SHIFT PEDAL ASSY	1	1	1			
35	97027-06020	BOLT	1	1	1			
36	5LP-18112-00	ARM, SHIFT	1	1	1			
37	2H9-18154-00	COVER, DUST	1	1	1			
38	2KW-18115-00	ROD, SHIFT	1	1	1			
39	90170-06228	NUT(COUNTER CLOCKWISE)	1	1	1			
40	95304-06700	NUT	1	1	1			
41	93210-15414	O-RING	2	2	2			
42	90201-15797	WASHER, PLATE	2	2	2			
43	93430-12008	CIRCLIP	1	1	1			

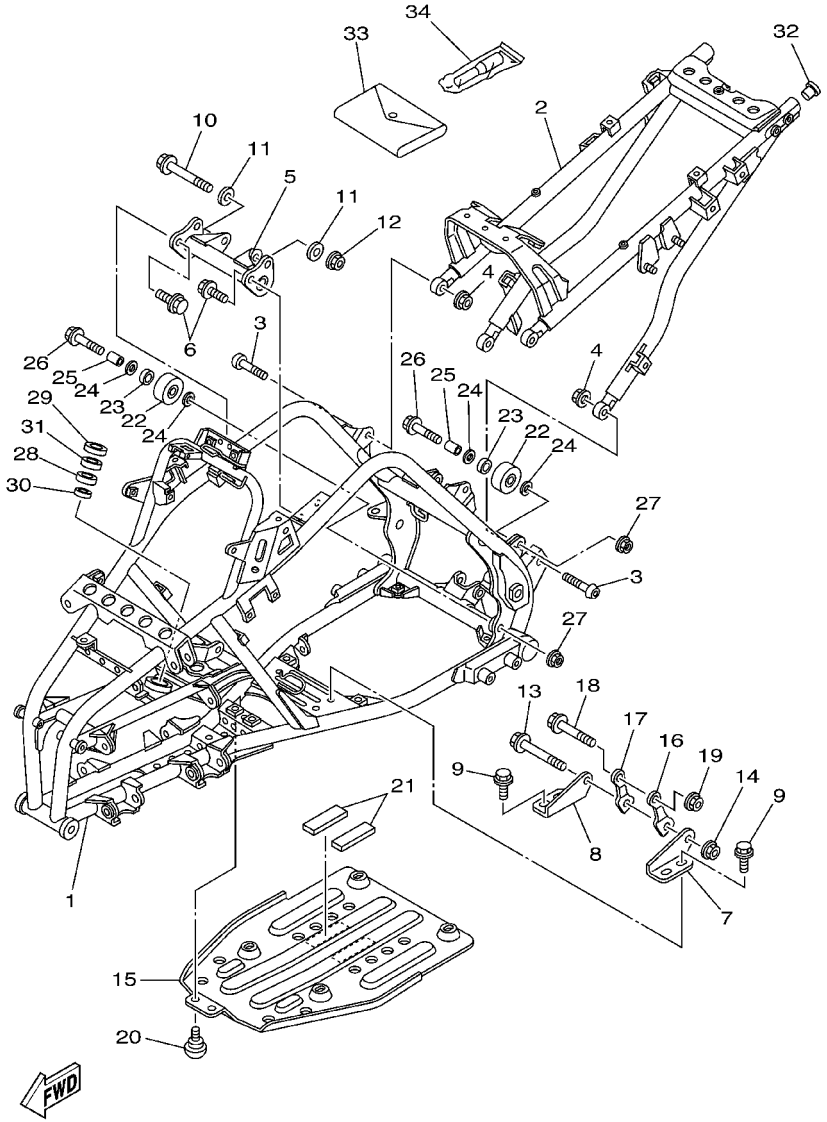

5LP5100-2180

FIG. 18 FRAME

REF. NO.	PART NO.	DESCRIPTION	USA	CAN	FRA			REMARKS
* 1	5LP-21101-29	FRONT FRAME COMP.(BLUE)	1	1	1			UR FOR DPBSE UR FOR RW
*	5LP-21101-39	FRONT FRAME COMP.(SILVER)	1	1				UR FOR DPBSE UR FOR RW
* 2	5LP-21190-29	REAR FRAME COMP.(BLUE)	1	1	1			
*	5LP-21190-39	REAR FRAME COMP.(SILVER)	1	1				
3	92017-10030	BOLT, BUTTON HEAD	4	4	4			
4	5LP-21244-00	NUT	4	4	4			
5	5LP-21315-10	STAY, ENGINE 2	1	1	1			
6	95817-08014	BOLT, FLANGE	4	4	4			
7	5LP-21316-00	STAY, ENGINE 3	1	1	1			
8	5LP-21317-00	STAY, ENGINE 3	1	1	1			
9	95817-10020	BOLT, FLANGE	4	4	4			
10	95817-10100	BOLT, FLANGE	1	1	1			
11	90201-10591	WASHER, PLATE	2	2	2			
12	95607-10200	NUT, SELF-LOCKING	1	1	1			
13	95817-10100	BOLT, FLANGE	1	1	1			
14	95607-10200	NUT, SELF-LOCKING	1	1	1			
15	5LP-21471-00	PROTECTOR, ENGINE	1	1	1			
16	5LP-21318-00	STAY, ENGINE 5	1	1	1			
17	5LP-21314-00	STAY, ENGINE 5	1	1	1			
18	95817-10080	BOLT, FLANGE	1	1	1			
19	95607-10200	NUT, SELF-LOCKING	1	1	1			
20	90109-066G1	BOLT	6	6	6			
21	41R-21717-00	DAMPER	2	2	2			
22	5LP-22178-00	TENSIONER	2	2	2			
23	93300-60804	BEARING	2	2	2			
24	90201-086P8	WASHER, PLATE	4	4	4			
25	90387-08009	COLLAR	2	2	2			

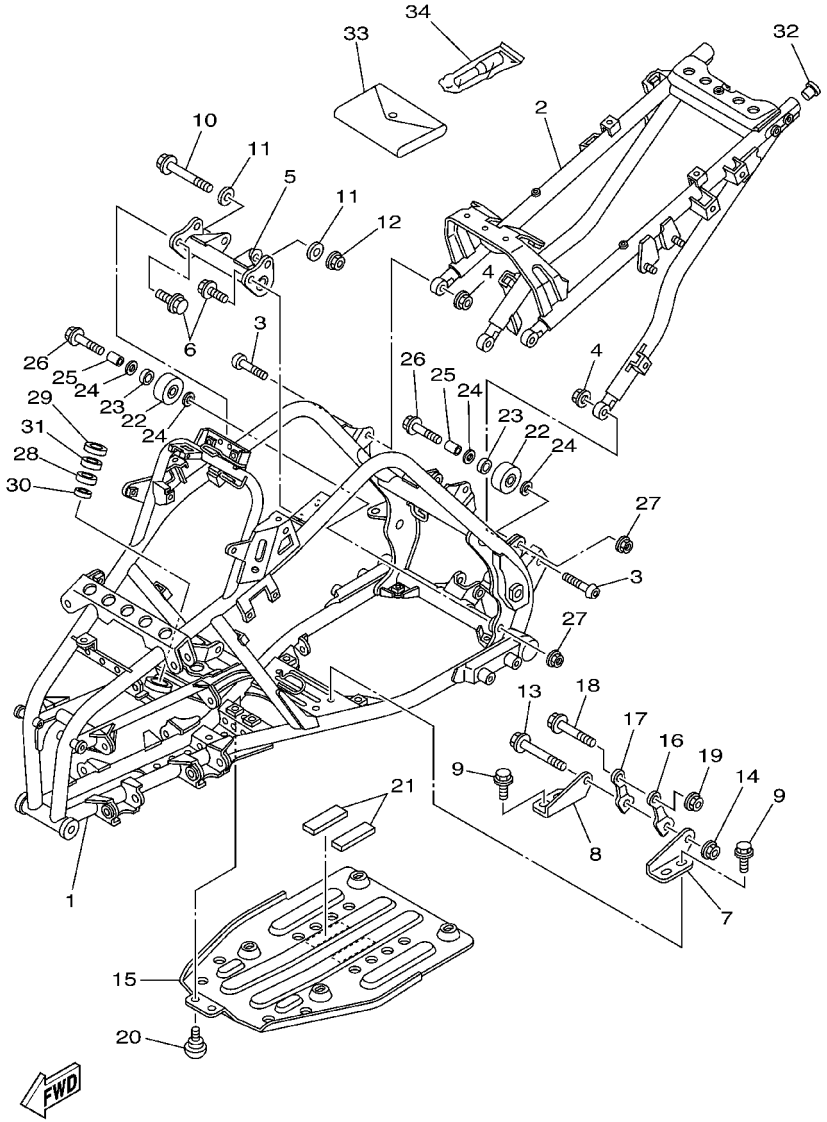

FIG. 18 FRAME

REF. NO.	PART NO.	DESCRIPTION	USA	CAN	FRA			REMARKS
26	95817–08050	BOLT, FLANGE	2	2	2			
27	95607–08200	NUT, SELF–LOCKING	2	2	2			
28	93306–20331	BEARING	1	1	1			
29	93102–25081	OIL SEAL	1	1	1			
30	93102–25099	OIL SEAL	1	1	1			
31	5GT–23872–00	HOLDER, BEARING	1	1	1			
32	90338–18122	PLUG	2	2	2			
33	4WV–28100–00	TOOL KIT	1	1	1			
34	1NV–2811A–01	GAUGE, AIR	1	1	1			

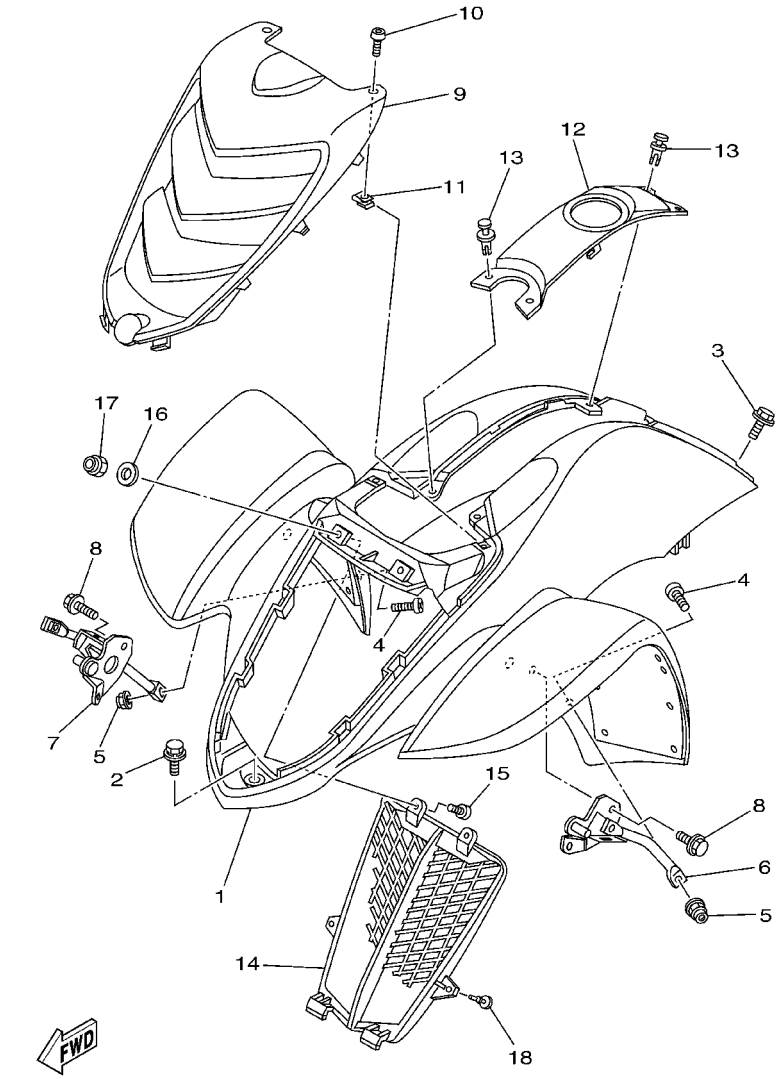

5LP5100-2190

FIG. 19 FRONT FENDER

REF. NO.	PART NO.	DESCRIPTION	USA	CAN	FRA			REMARKS
1	5LP–W2151–00	FRONT FENDER COMP.	1					UR FOR DPBSE
	5LP–W2151–10	FRONT FENDER COMP.	1					UR FOR RW
	5LP–W215C–00	FRONT FENDER COMP 2		1				UR FOR DPBSE
	5LP–W215C–10	FRONT FENDER COMP 2		1				UR FOR RW
	5LP–W215B–00	FRONT FENDER COMP. 2			1			
2	90119–06056	BOLT, WITH WASHER	1	1	1			
3	90119–06118	BOLT, WITH WASHER	2	2	2			
4	90149–06306	SCREW	2	2	2			
5	95607–06200	NUT, SELF U–FLANGE	2	2	2			
6	5LP–21513–00	STAY, FENDER 1	1	1	1			
7	5LP–21514–00	STAY, FENDER 2	1	1	1			
8	95807–08014	BOLT, FLANGE	4	4	4			
9	5LP–21556–00	FENDER, FRONT 2	1	1	1			UR FOR DPBSE
	5LP–21556–A0	FENDER, FRONT 2	1	1				UR FOR RW
10	90110–05201	BOLT, HEXAGON SOCKET HEAD	2	2	2			
11	90183–05008	NUT, SPRING	2	2	2			
12	5LP–2171A–00	COVER, TOP	1	1	1			UR FOR DPBSE
	5LP–2171A–10	COVER, TOP	1	1				UR FOR RW
13	90269–06002	RIVET	4	4	4			
14	5LP–12467–10	COVER, RADIATOR	1	1	1			
15	90154–05011	SCREW, BINDING	2	2	2			
16	90201–05725	WASHER, PLATE	2	2	2			
17	95607–05100	NUT, U	2	2	2			
18	90480–05201	GROMMET	2	2	2			

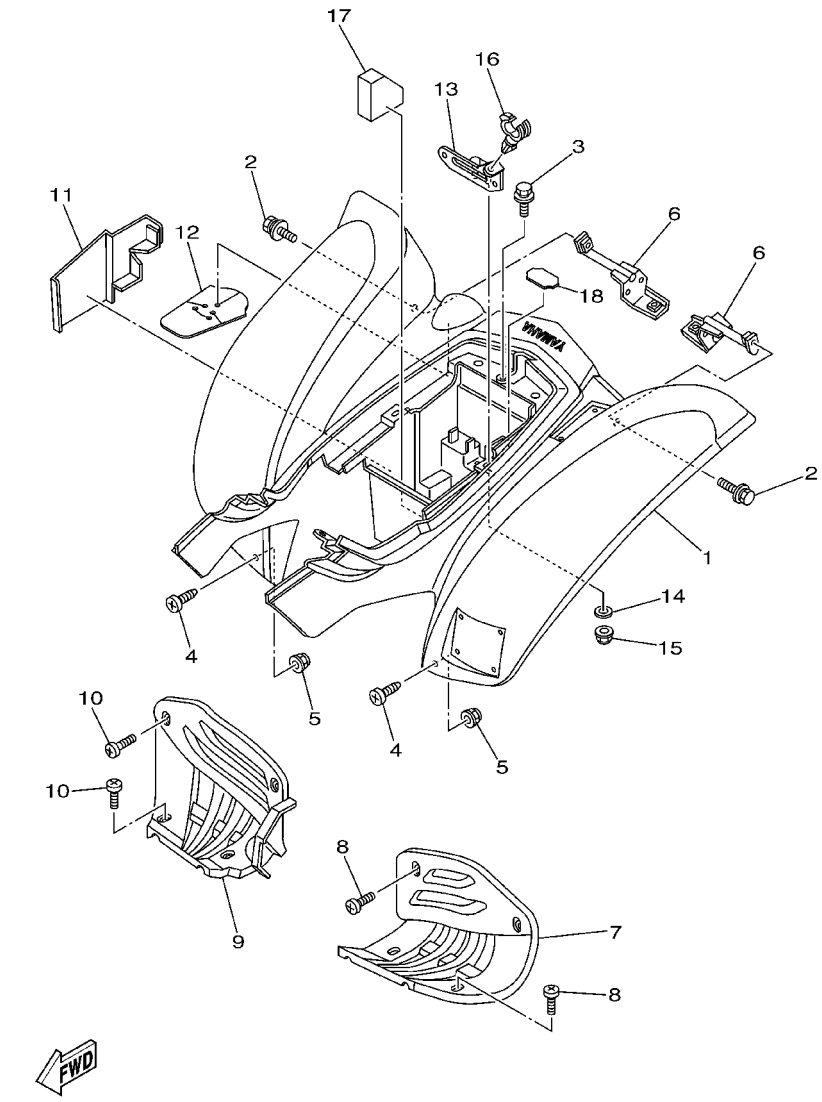

5LP5100-2200

FIG. 20 REAR FENDER

REF. NO.	PART NO.	DESCRIPTION	USA	CAN	FRA			REMARKS
1	5LP–W2161–00	REAR FENDER COMP.	1					UR FOR DPBSE
	5LP–W2161–10	REAR FENDER COMP.	1					UR FOR RW
	5LP–W216C–00	REAR FENDER COMP 2		1				UR FOR DPBSE
	5LP–W216C–10	REAR FENDER COMP 2		1				UR FOR RW
	5LP–W216B–00	REAR FENDER COMP.2			1			
2	90119–06056	BOLT, WITH WASHER	2	2	2			
3	90119–06118	BOLT, WITH WASHER	1	1	1			
4	90149–06306	SCREW	2	2	2			
5	95607–06200	NUT, SELF U–FLANGE	2	2	2			
6	5LP–21613–10	STAY, FENDER 1	2	2	2			
7	5LP–21621–00	FLAP	1	1	1			
8	90154–05013	SCREW, BINDING	4	4	4			
9	5LP–21691–00	FLAP	1	1	1			
10	90154–05013	SCREW, BINDING	4	4	4			
11	5LP–2163A–00	COVER, REAR FENDER 1	1	1	1			
12	5LP–2163E–00	COVER, REAR FENDER 2	1	1	1			
13	5LP–21688–00	BRACKET, REAR STAY	1	1	1			
14	90201–06380	WASHER, PLATE	2	2	2			
15	95607–06200	NUT, SELF U–FLANGE	2	2	2			
16	90464–20181	CLAMP	1	1	1			
17	5LP–27114–00	STOPPER, MAIN STAND	1	1	1			
18	5LP–21639–00	DAMPER 2	1	1	1			

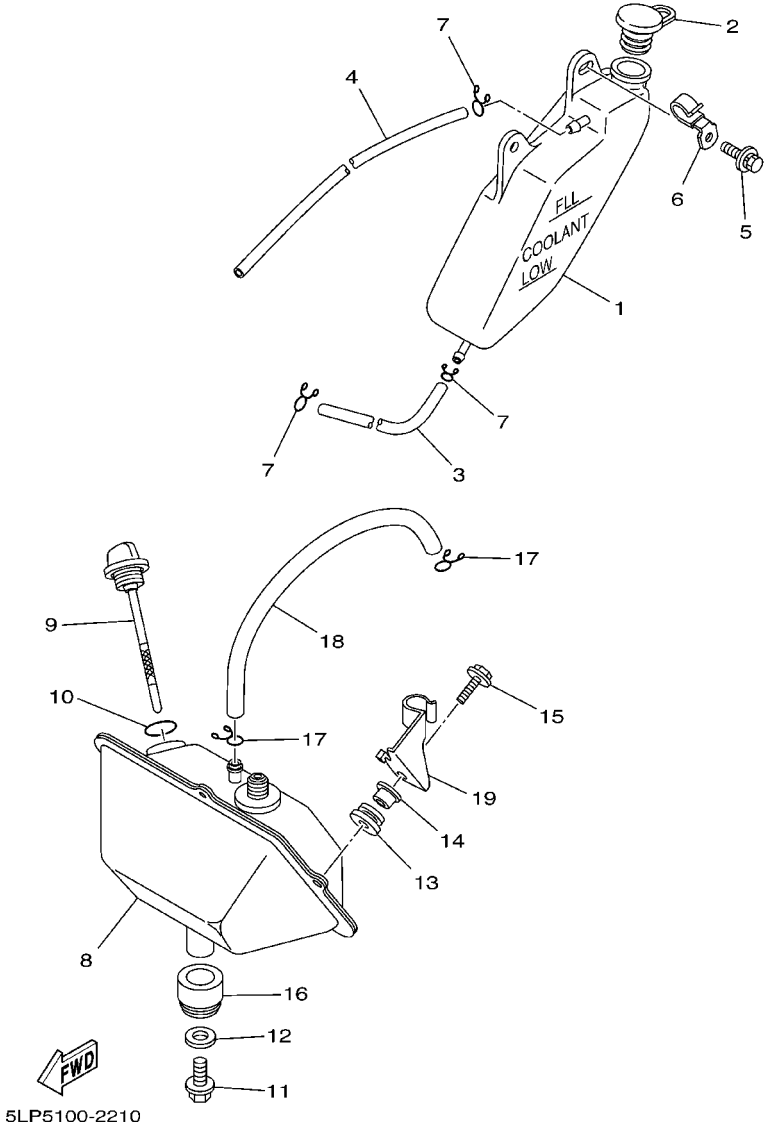

FIG. 21 OIL TANK

REF. NO.	PART NO.	DESCRIPTION	USA	CAN	FRA			REMARKS
1	3LD–21871–00	TANK, RECOVERY	1	1	1			
2	10V–21875–00	CAP	1	1	1			
3	90445–090F7	HOSE (L1150)	1	1	1			
4	90445–09300	HOSE (L355)	1	1	1			
5	90119–06056	BOLT, WITH WASHER	2	2	2			
6	5LP–24135–10	CLAMP 1	1	1	1			
7	90467–08003	CLIP	3	3	3			
8	5LP–21750–00	OIL TANK ASSY	1	1	1			
9	5LP–21761–01	GAUGE, LEVEL	1	1	1			
10	93210–21190	O–RING	1	1	1			
11	95807–10016	BOLT, FLANGE	1	1	1			
12	90201–11723	WASHER, PLATE	1	1	1			
13	90480–12421	GROMMET	2	2	2			
14	90387–067N5	COLLAR	2	2	2			
15	90119–06118	BOLT, WITH WASHER	2	2	2			
16	90480–24001	GROMMET	1	1	1			
17	90467–10008	CLIP	2	2	2			
18	90445–11289	HOSE (L200)	1	1	1			
19	5LP–2175T–00	BRACKET 1	1	1	1			

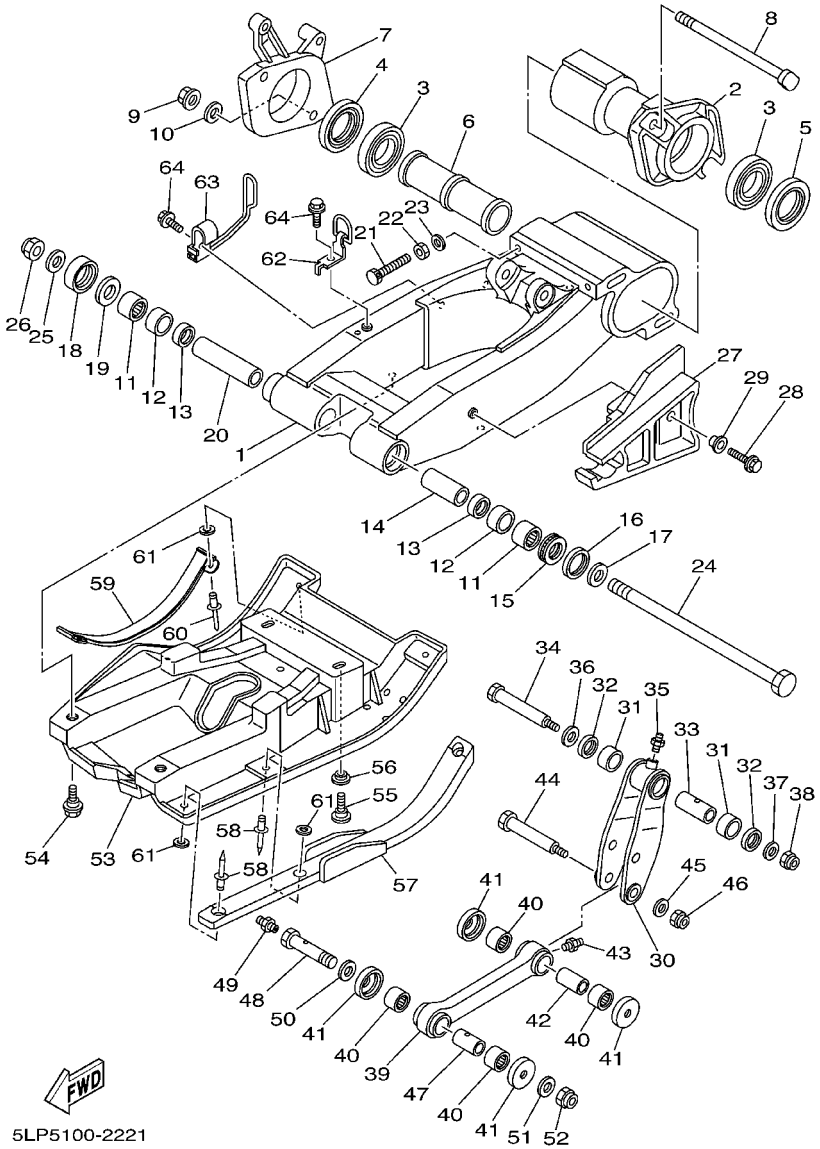

FIG. 22 REAR ARM

REF. NO.	PART NO.	DESCRIPTION	USA	CAN	FRA			REMARKS
1	5LP–22110–10	REAR ARM COMP.	1	1	1			
2	5LP–25311–10	HUB, REAR	1	1	1			
3	93306–00705	BEARING	2	2	2			
4	93102–42260	OIL SEAL	1	1	1			
5	93102–43341	OIL SEAL	1	1	1			
6	90560–35263	SPACER	1	1	1			
7	5LP–25721–10	BRACKET, CALIPER	1	1	1			
8	90109–12002	BOLT	2	2	2			
9	90179–12588	NUT	2	2	2			
10	90201–122H1	WASHER, PLATE	2	2	2			
11	93317–22237	BEARING	2	2	2			
12	90380–22111	BUSH, SOLID	2	2	2			
13	93106–22019	OIL SEAL (DC 22–28–8)	2	2	2			
14	5LP–22123–00	BUSH 1	1	1	1			
15	93342–22217	BEARING	1	1	1			
16	93109–28043	OIL SEAL	1	1	1			
17	90387–16006	COLLAR	1	1	1			
18	4X7–22129–00	COVER, THRUST 2	1	1	1			
19	3YF–22149–00	WASHER	1	1	1			
20	5LP–22184–00	BUSH	1	1	1			
21	90103–08026	BOLT, HEAD WITH HOLE	2	2	2			
22	95307–08600	NUT	2	2	2			
23	90201–083P5	WASHER, PLATE	2	2	2			
24	5LP–22141–00	SHAFT, PIVOT	1	1	1			
25	90201–160F6	WASHER, PLATE	1	1	1			
26	90185–16127	NUT, SELF–LOCKING	1	1	1			
27	5LP–22151–10	SEAL, GUARD	1	1	1			

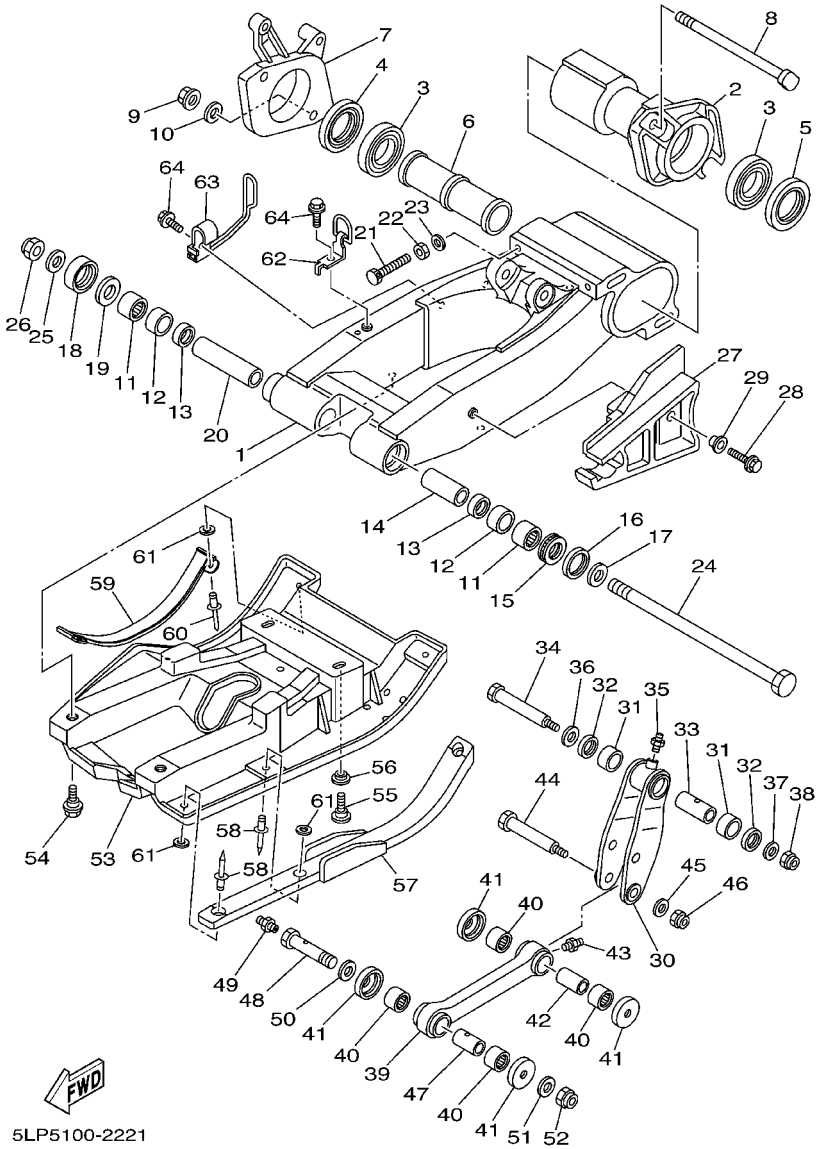

FIG. 22 REAR ARM

REF. NO.	PART NO.	DESCRIPTION	USA	CAN	FRA			REMARKS
28	95807-06020	BOLT, FLANGE	1	1	1			
29	90387-06500	COLLAR	1	1	1			
30	5LP-2217A-10	ARM, RELAY	1	1	1			
31	90383-20033	BUSH, FORMED	2	2	2			
32	93109-20076	OIL SEAL	2	2	2			
33	90387-125N9	COLLAR	1	1	1			
34	90109-10008	BOLT	1	1	1			
35	93700-06004	NIPPLE, GREASE	1	1	1			
36	90201-122H1	WASHER, PLATE	1	1	1			
37	90201-100U1	WASHER, PLATE	1	1	1			
38	90185-10060	NUT, SELF-LOCKING	1	1	1			
39	5LP-2217F-10	ROD, CONNECTING 1	1	1	1			
40	90383-20032	BUSH, FORMED	4	4	4			
41	23X-22129-00	COVER, THRUST 2	4	4	4			
42	90387-125K2	COLLAR	1	1	1			
43	93700-06004	NIPPLE, GREASE	1	1	1			
44	90109-10654	BOLT	1	1	1			
45	90201-101J1	WASHER, PLATE	1	1	1			
46	90185-10060	NUT, SELF-LOCKING	1	1	1			
47	90387-12010	COLLAR	1	1	1			
48	90109-12003	BOLT	1	1	1			
49	93700-06004	NIPPLE, GREASE	1	1	1			
50	90201-12016	WASHER, PLATE	1	1	1			
51	90201-124G9	WASHER, PLATE	1	1	1			
52	90185-12134	NUT, SELF-LOCKING	1	1	1			
53	5LP-2219X-00	COVER	1	1	1			
54	90109-063F1	BOLT	2	2	2			

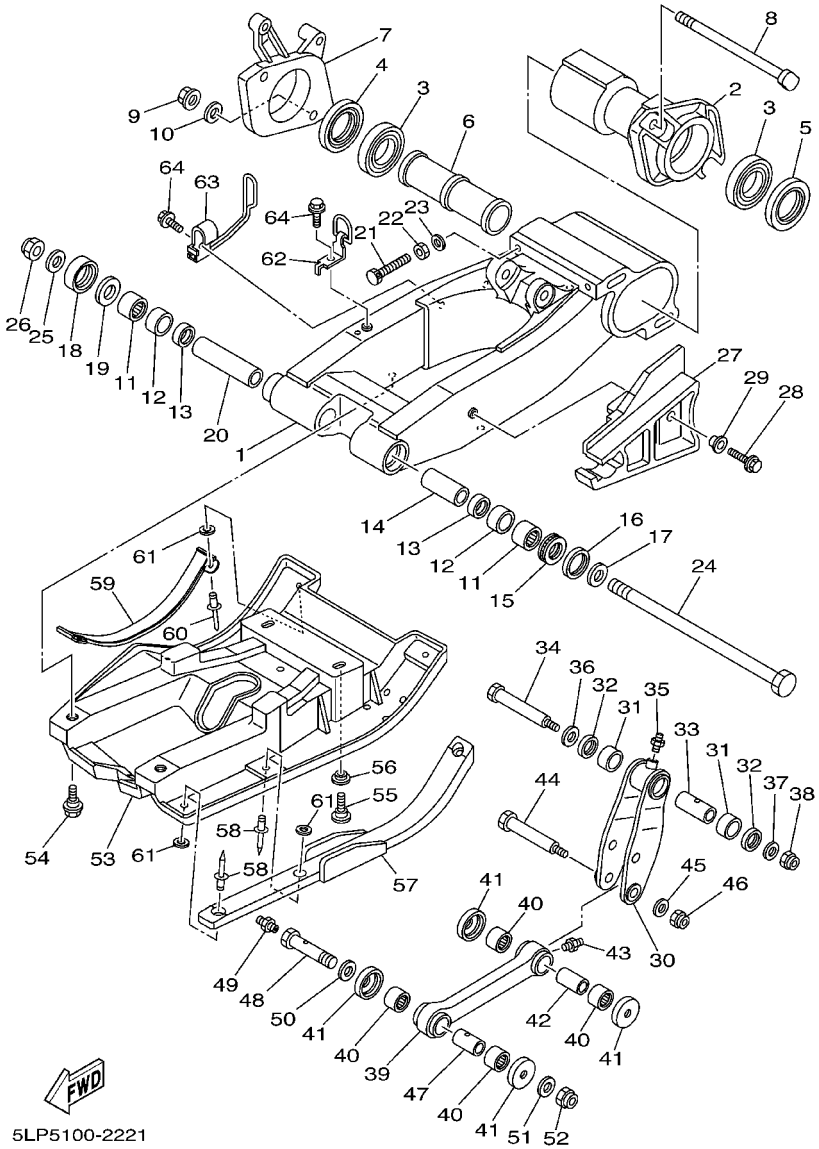

FIG. 22 REAR ARM

REF. NO.	PART NO.	DESCRIPTION	USA	CAN	FRA			REMARKS
55	97007–08020	BOLT	2	2	2			
56	90387–083J6	COLLAR	2	2	2			
57	5LP–22153–10	GUARD, CHAIN	1	1	1			
58	90267–47187	RIVET, BLIND	3	3	3			
59	5LP–25345–00	INSERT, PLATE	1	1	1			
60	90267–47200	RIVET, BLIND	2	2	2			
61	90201–04325	WASHER, PLATE	5	5	5			
62	5EB–25887–00	HOLDER, BRAKE HOSE	1	1	1			
63	5LP–25886–00	HOLDER, BRAKE HOSE	1	1	1			
64	95027–06020	BOLT, FLANGE	2	2	2			

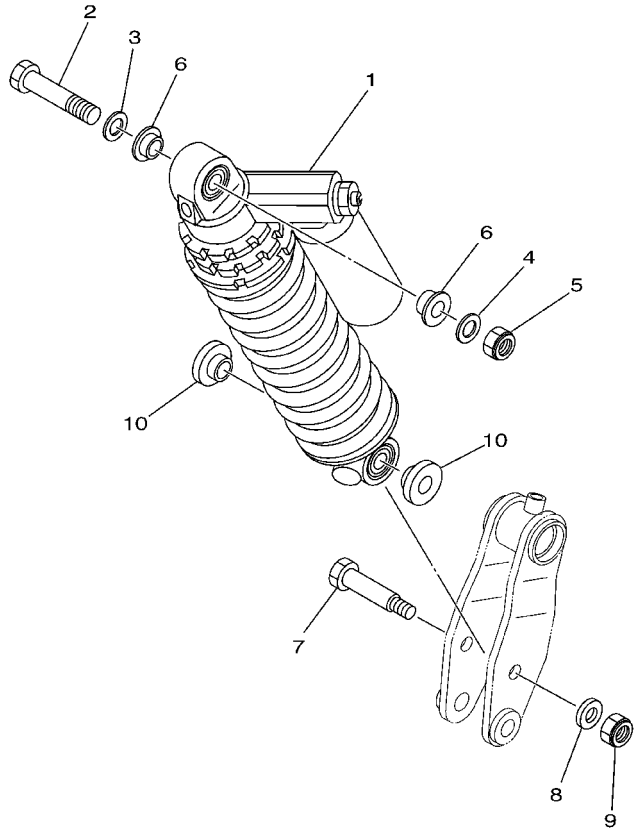

5LP5100-2230

FIG. 23 REAR SUSPENSION

REF. NO.	PART NO.	DESCRIPTION	USA	CAN	FRA			REMARKS
1	5LP–22210–30	SHOCK ABSORBER ASSY, REAR	1					UR FOR DPBSE
	5LP–22210–40	SHOCK ABSORBER ASSY, REAR	1					UR FOR RW
	5LP–22210–50	SHOCK ABSORBER ASSY, REAR		1				UR FOR DPBSE
	5LP–22210–60	SHOCK ABSORBER ASSY, REAR		1				UR FOR RW
	5LP–22210–70	SHOCK ABSORBER ASSY, REAR			1			
2	90101–12012	BOLT	1	1	1			
3	90201–12016	WASHER, PLATE	1	1	1			
4	90201–124G9	WASHER, PLATE	1	1	1			
5	90185–12134	NUT, SELF–LOCKING	1	1	1			
6	90387–127G8	COLLAR	2	2	2			
7	90109–10009	BOLT	1	1	1			
8	90201–10774	WASHER, PLATE	1	1	1			
9	90185–10060	NUT, SELF–LOCKING	1	1	1			
10	90387–12015	COLLAR	2	2	2			

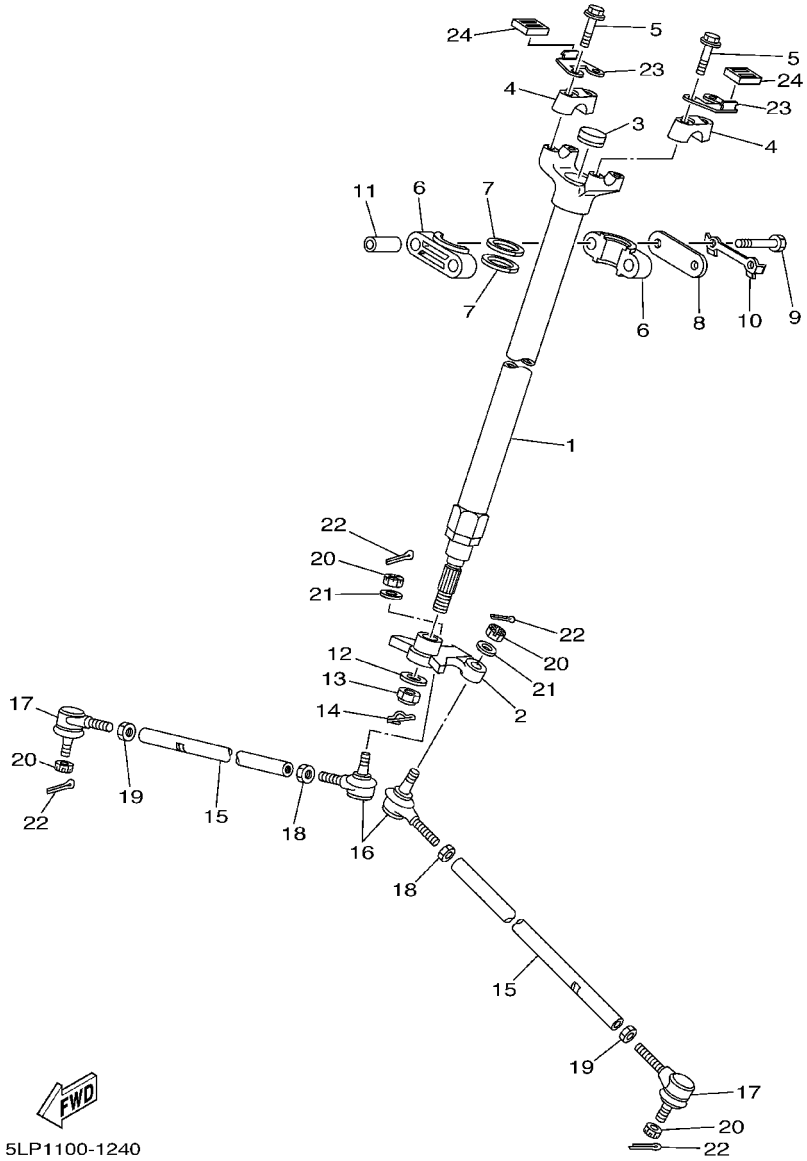

FIG. 24 STEERING

REF. NO.	PART NO.	DESCRIPTION	USA	CAN	FRA			REMARKS
1	5LP–23813–10	COLUMN, STEERING 2	1	1	1			
2	5LP–23816–00	ARM, PITMAN	1	1	1			
3	90336–28053	PLUG, TAPER	1	1	1			
4	8K1–23814–00	HOLDER, HANDLE	2	2	2			
5	95827–08035	BOLT, FLANGE	4	4	4			
6	1UY–23812–00	PLANE BEARING, STEERING	2	2	2			
7	93112–31011	OIL SEAL	2	2	2			
8	1UY–23868–01	BRACKET, STEERING LOWER	1	1	1			
9	97027–08060	BOLT	2	2	2			
10	1UY–23894–01	WASHER, LOCK 1	1	1	1			
11	90387–090R0	COLLAR	2	2	2			
12	90201–14226	WASHER, PLATE	1	1	1			
13	90185–14150	NUT, SELF–LOCKING	1	1	1			
14	90468–16191	CLIP	1	1	1			
15	5LP–23831–00	ROD, TIE	2	2	2			
16	1UY–23841–01	JOINT, UNIVERSAL 1	2	2	2			
17	1UY–23845–01	JOINT, UNIVERSAL 2	2	2	2			
18	95307–10700	NUT	2	2	2			
19	90170–10186	NUT	2	2	2			(L.H. THREAD)
20	90171–10046	NUT, CASTLE	4	4	4			
21	90209–10229	WASHER	2	2	2			
22	91401–20020	PIN, COTTER	4	4	4			
23	5LP–23881–00	BRACKET 1	2	2	2			
24	5LP–23858–00	SPACER	2	2	2			

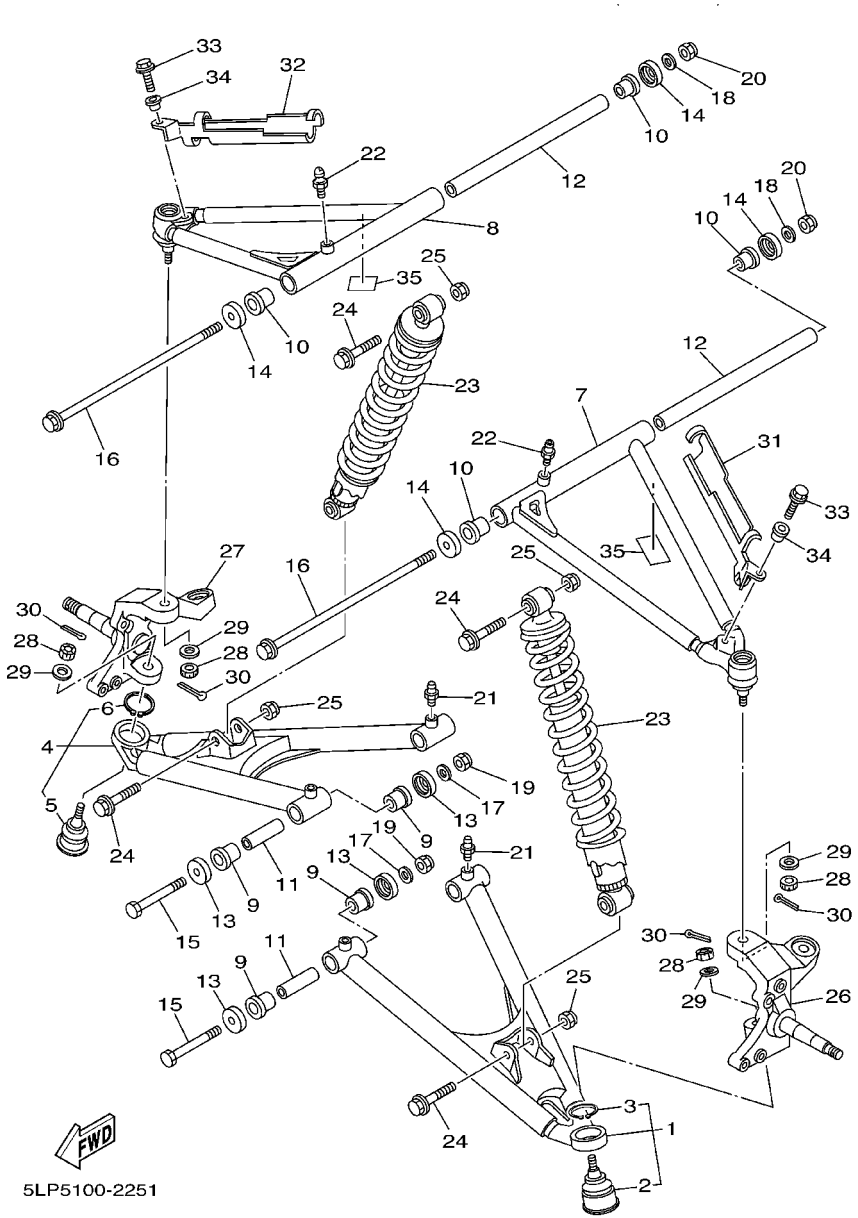

FIG. 25 FRONT SUSPENSION. WHEEL

REF. NO.	PART NO.	DESCRIPTION	USA	CAN	FRA			REMARKS
* 1	5LP–23570–00	FRONT LOWER ARM COMP. (LEFT)	1	1	1			
* 2	5LP–23579–00	.BALL JOINT 2	1	1	1			
* 3	99009–30400	.CIRCLIP	1	1	1			
* 4	5LP–23580–00	FRONT LOWER ARM COMP. (RIGHT)	1	1	1			
* 5	5LP–23579–00	.BALL JOINT 2	1	1	1			
* 6	99009–30400	.CIRCLIP	1	1	1			
* 7	5LP–23540–10	FRONT UPPER ARM COMP. (LEFT)	1	1	1			
* 8	5LP–23550–10	FRONT UPPER ARM COMP. (RIGHT)	1	1	1			
* 9	90381–15088	BUSH, SOLID	8	8	8			
*10	90381–15088	BUSH, SOLID	4	4	4			
*11	90387–101R3	COLLAR	4	4	4			
*12	90387–10002	COLLAR	2	2	2			
*13	1UY–23517–00	COVER, THRUST 1	8	8	8			
*14	1UY–23517–00	COVER, THRUST 1	4	4	4			
*15	90105–10034	BOLT, FLANGE	4	4	4			
*16	90105–10407	BOLT, FLANGE	2	2	2			
*17	90201–10430	WASHER, PLATE	4	4	4			
*18	90201–10430	WASHER, PLATE	2	2	2			
*19	90185–10060	NUT, SELF–LOCKING	4	4	4			
*20	90185–10120	NUT, SELF–LOCKING	2	2	2			
*21	93700–06004	NIPPLE, GREASE	4	4	4			
*22	93700–06004	NIPPLE, GREASE	2	2	2			
*23	5LP–23350–00	SHOCK ABSORBER ASSY	2	2	2			UR FOR DPBSE
*	5LP–23350–10	SHOCK ABSORBER ASSY	2	2				UR FOR RW
*24	90105–10388	BOLT, FLANGE	4	4	4			
*25	90185–10060	NUT, SELF–LOCKING	4	4	4			
*26	5LP–23501–00	STEERING KNUCKLE ASSY (LEFT)	1	1	1			

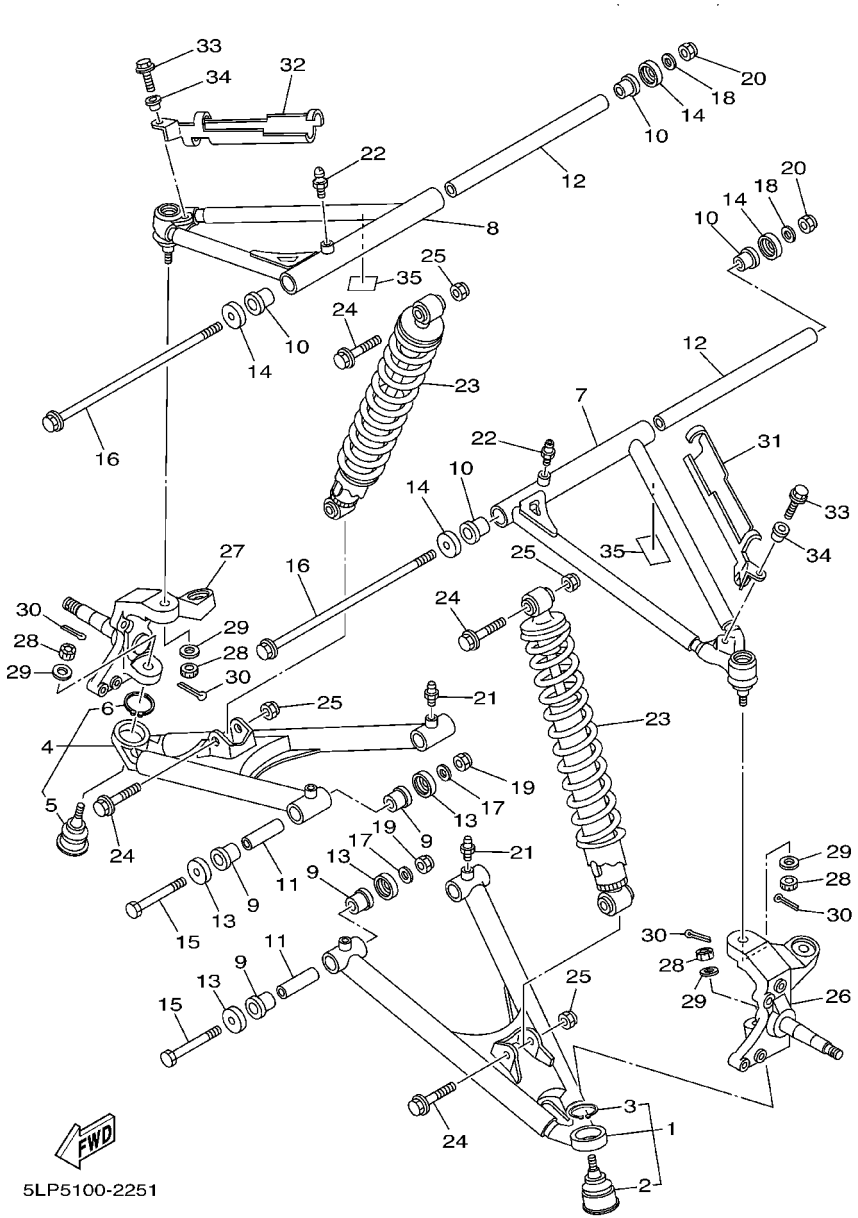

FIG. 25 FRONT SUSPENSION. WHEEL

REF. NO.	PART NO.	DESCRIPTION	USA	CAN	FRA			REMARKS
*27	5LP–23502–00	STEERING KNUCKLE ASSY (RIGHT)	1	1	1			
*28	90171–10046	NUT, CASTLE	4	4	4			
*29	90209–10229	WASHER	4	4	4			
*30	91401–20020	PIN, COTTER	4	4	4			
*31	5LP–25875–00	HOLDER, BRAKE HOSE 1	1	1	1			
*32	5LP–25876–00	HOLDER, BRAKE HOSE 2	1	1	1			
*33	95027–06016	BOLT, FLANGE	2	2	2			
*34	90387–081R2	COLLAR	2	2	2			
*35	3SP–21732–00	SEAL 1	2	2	2			

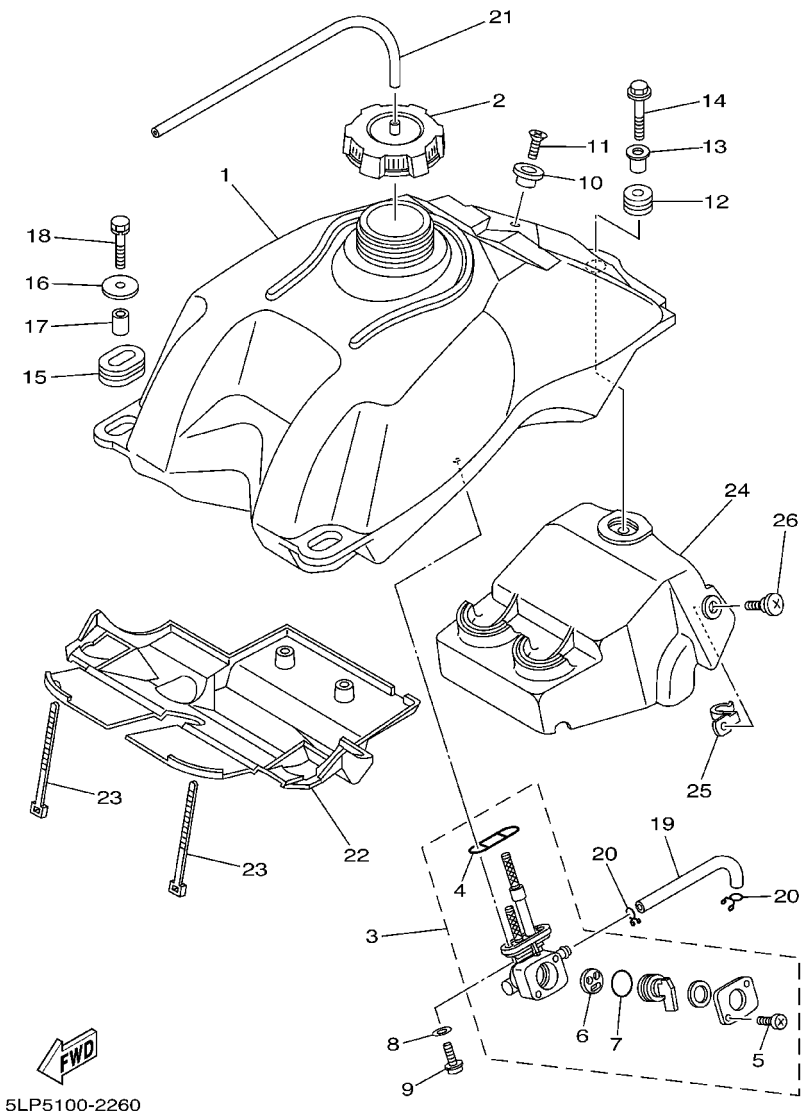

FIG. 26 FUEL TANK

REF. NO.	PART NO.	DESCRIPTION	USA	CAN	FRA			REMARKS
1	5LP–24110–00	FUEL TANK COMP.	1	1	1			
2	5KM–24610–00	CAP ASSY	1	1	1			
3	5LP–24500–00	FUEL COCK ASSY 1	1	1	1			
4	4X8–24512–00	.O–RING	1	1	1			
5	98507–03008	.SCREW, PAN HEAD	2	2	2			
6	3AJ–24523–00	.VALVE PACKING	1	1	1			
7	3AJ–24534–00	.SEAL, COCK	1	1	1			
8	90202–05193	WASHER, PLATE	2	2	2			
9	90149–06011	SCREW	2	2	2			
10	4EW–2412F–00	BRACKET, SEAT	1	1	1			
11	98707–06025	SCREW, FLAT HEAD	1	1	1			
12	90480–18290	GROMMET	1	1	1			
13	90387–066J1	COLLAR	1	1	1			
14	95827–06030	BOLT, FLANGE	1	1	1			
15	90480–01400	GROMMET	2	2	2			
16	90201–060L5	WASHER, PLATE	2	2	2			
17	90387–07598	COLLAR	2	2	2			
18	90119–06073	BOLT, WITH WASHER	2	2	2			
19	90445–110F2	HOSE (L155)	1	1	1			
20	90467–11106	CLIP	2	2	2			
21	90445–083J4	HOSE (L340)	1	1	1			
22	5LP–2414H–01	DAMPER, PLATE 1	1	1	1			
23	437–83936–01	BAND, SWITCH CORD	2	2	2			
24	5LP–2414J–00	DAMPER, PLATE 2	1	1	1			
25	5LP–24135–00	CLAMP 1	2	2	2			
26	90154–06014	SCREW, BINDING	2	2	2			

FIG. 27 SEAT

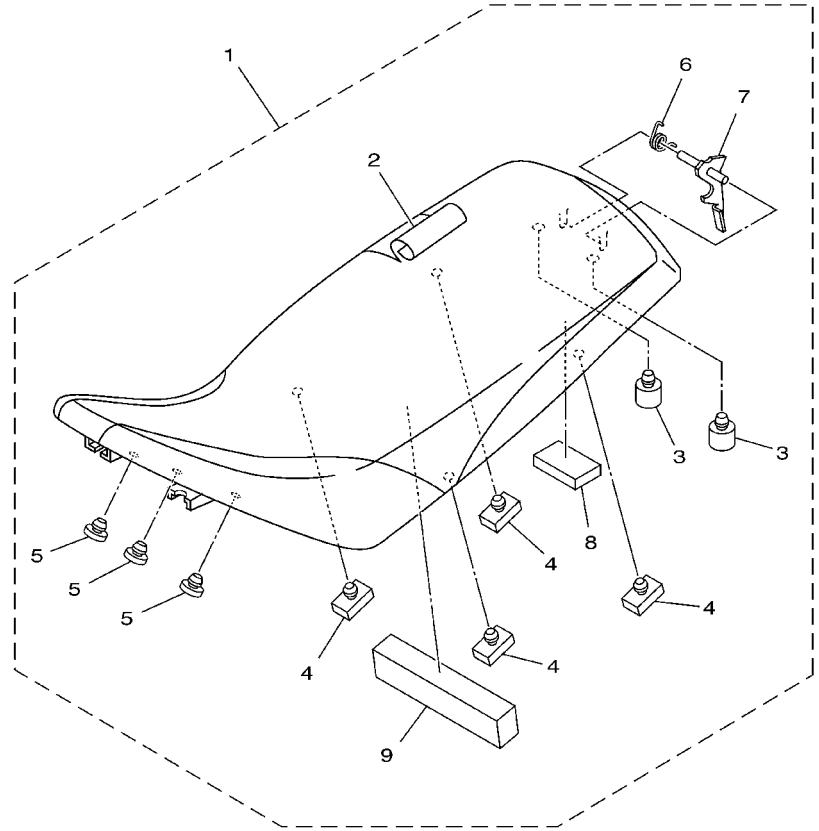

5LP1100-1270

REF. NO.	PART NO.	DESCRIPTION	USA	CAN	FRA			REMARKS
1	5LP–24710–00	SINGLE SEAT ASSY	1	1	1			
2	5LP–2470F–00	.SEAT COVER COMP.	1	1	1			
3	371–27114–00	.STOPPER, MAIN STAND	2	2	2			
4	214–24724–00	.DAMPER, SEAT	4	4	4			
5	22W–24741–00	.PAD, SEAT	3	3	3			
6	90508–23567	.SPRING, TORSION	1	1	1			
7	5LP–24776–00	.LEVER, SEAT	1	1	1			
8	5LP–24725–00	.SPACER	1	1	1			
9	5LP–24729–00	.SPACER 2	1	1	1			

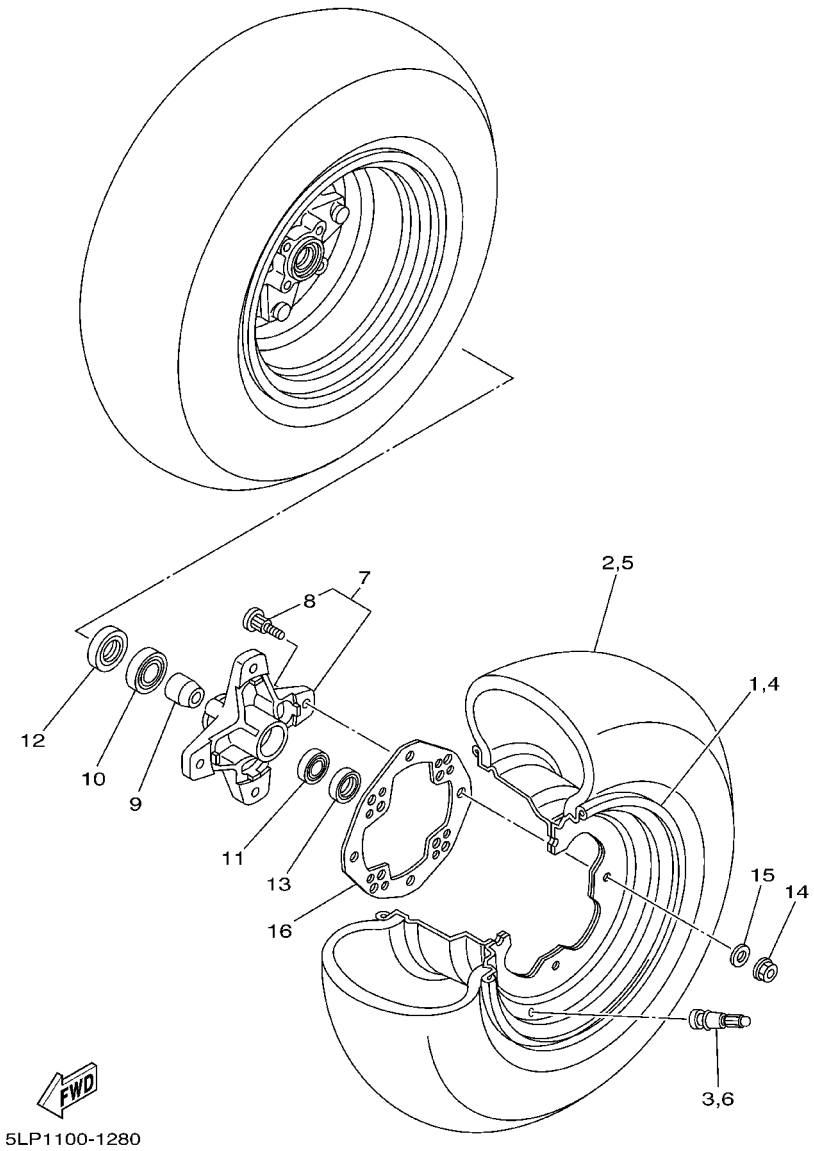

FIG. 28 FRONT WHEEL

REF. NO.	PART NO.	DESCRIPTION	USA	CAN	FRA			REMARKS
1	5LP–25180–10	WHEEL COMP.	1	1	1			
2	94107–10009	TIRE(AT21 X 7–10,DUNLOP–KT331)	1	1	1			
3	93900–00030	VALVE, RIM	1	1	1			
4	5LP–25180–10	WHEEL COMP.	1	1	1			
5	94107–10009	TIRE(AT21 X 7–10,DUNLOP–KT331)	1	1	1			
6	93900–00030	VALVE, RIM	1	1	1			
7	5LP–25111–00	HUB, FRONT	2	2	2			
8	90114–10007	.BOLT, SERRATION	4	4	4			
9	5LP–25117–00	SPACER, BEARING	2	2	2			
10	93306–00406	BEARING (B6004Z)	2	2	2			UR NTN
	93306–00438	BEARING	2	2	2			UR NIHON SEIKO
11	93306–20227	BEARING	2	2	2			
12	93105–26026	OIL SEAL	2	2	2			
13	93102–22216	OIL SEAL	2	2	2			
14	95707–10500	NUT, FLANGE	8	8	8			
15	92907–10200	WASHER, PLAIN	8	8	8			
16	3GD–25127–10	COVER, PLATE	2	2	2			

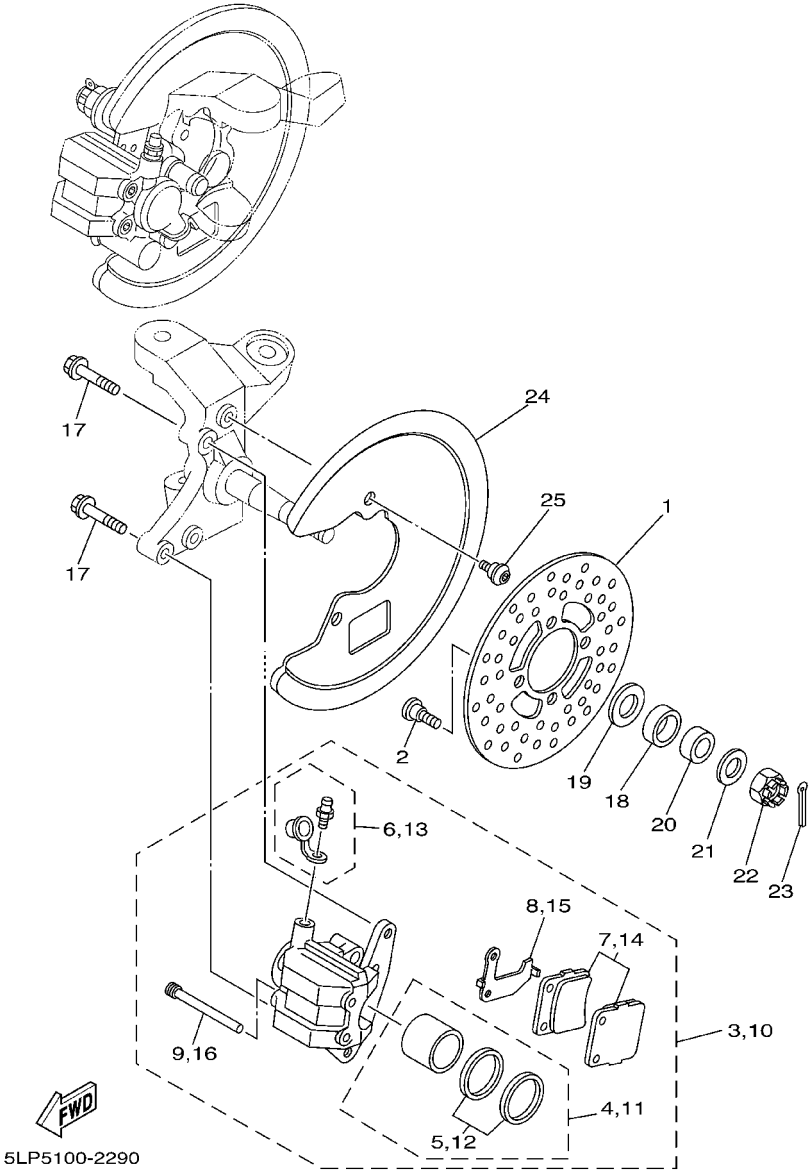

FIG. 29 FRONT BRAKE CALIPER

REF. NO.	PART NO.	DESCRIPTION	USA	CAN	FRA			REMARKS
1	3GD-2582T-00	DISC, BRAKE	2	2	2			
2	90149-08268	SCREW	8	8	8			
3	5LP-2580T-00	CALIPER ASSY (LEFT)	1	1	1			
4	3GD-W0057-00	.PISTON ASSY, CALIPER	1	1	1			
5	3GD-W0047-00	..CALIPER SEAL KIT	1	1	1			
6	1UY-W0048-50	.BLEED SCREW KIT	1	1	1			
7	5LP-W0045-00	.BRAKE PAD KIT	1	1	1			
8	3GD-25827-00	.SHIM, CALIPER	1	1	1			
9	3GD-25933-00	.PIN, PAD	2	2	2			
10	5LP-2580U-00	CALIPER ASSY (RIGHT)	1	1	1			
11	3GD-W0057-00	.PISTON ASSY, CALIPER	1	1	1			
12	3GD-W0047-00	..CALIPER SEAL KIT	1	1	1			
13	1UY-W0048-50	.BLEED SCREW KIT	1	1	1			
14	5LP-W0045-00	.BRAKE PAD KIT	1	1	1			
15	3GD-25828-00	.SHIM, CALIPER	1	1	1			
16	3GD-25933-00	.PIN, PAD	2	2	2			
17	90105-08520	BOLT, FLANGE	4	4	4			
18	90387-20005	COLLAR	2	2	2			
19	90201-204R5	WASHER, PLATE	2	2	2			
20	90387-150R1	COLLAR	2	2	2			
21	90201-14586	WASHER, PLATE	2	2	2			
22	90171-14020	NUT, CASTLE	2	2	2			
23	91401-30025	PIN, COTTER	2	2	2			
24	5LP-2514A-10	RING, WHEEL 1 (LEFT)	2	2	2			
25	90109-066G1	BOLT	4	4	4			

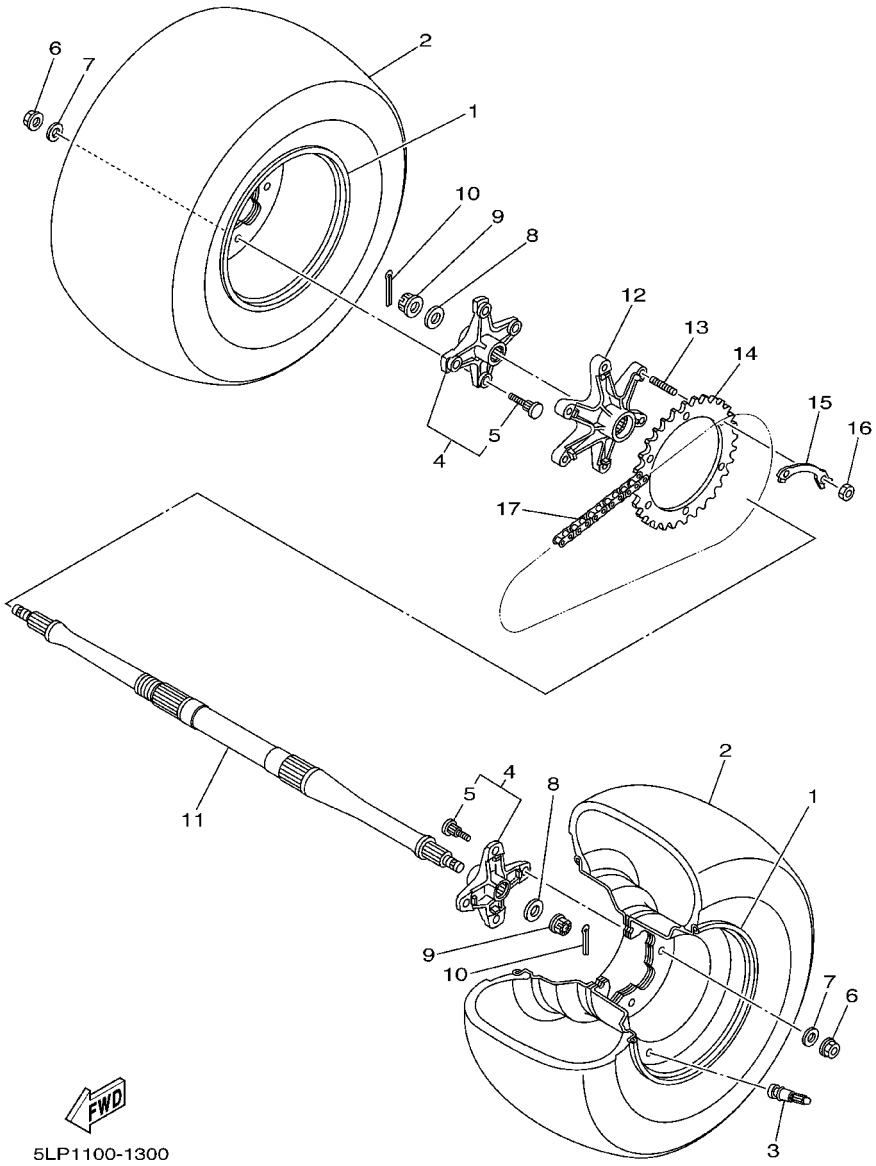

FIG. 30 REAR WHEEL

REF. NO.	PART NO.	DESCRIPTION	USA	CAN	FRA			REMARKS
1	5LP–25390–10	REAR WHEEL COMP.	2	2	2			
2	94110–09008	TIRE(AT21 X 10–9,DUNLOP–KT335)	2	2	2			
3	93900–00022	VALVE, RIM	2	2	2			TAIHEIYO
4	5LP–25383–00	COLLAR, WHEEL	2	2	2			
5	90114–10009	.BOLT, SERRATION	4	4	4			
6	95707–10500	NUT, FLANGE	8	8	8			
7	92907–10200	WASHER, PLAIN	8	8	8			
8	90201–14226	WASHER, PLATE	2	2	2			
9	90171–14037	NUT, CASTLE	2	2	2			
10	91401–30030	PIN, COTTER	2	2	2			
11	5LP–25381–10	AXLE, WHEEL	1	1	1			
12	5LP–25386–00	COLLAR, SPROCKET AXLE	1	1	1			
13	90116–08507	BOLT, STUD	6	6	6			
14	2XJ–25440–20	SPROCKET, DRIVEN (40T)	1	1	1			
15	2XJ–25412–00	WASHER	3	3	3			
16	90170–08258	NUT	6	6	6			
17	94582–02092	CHAIN	1	1	1			

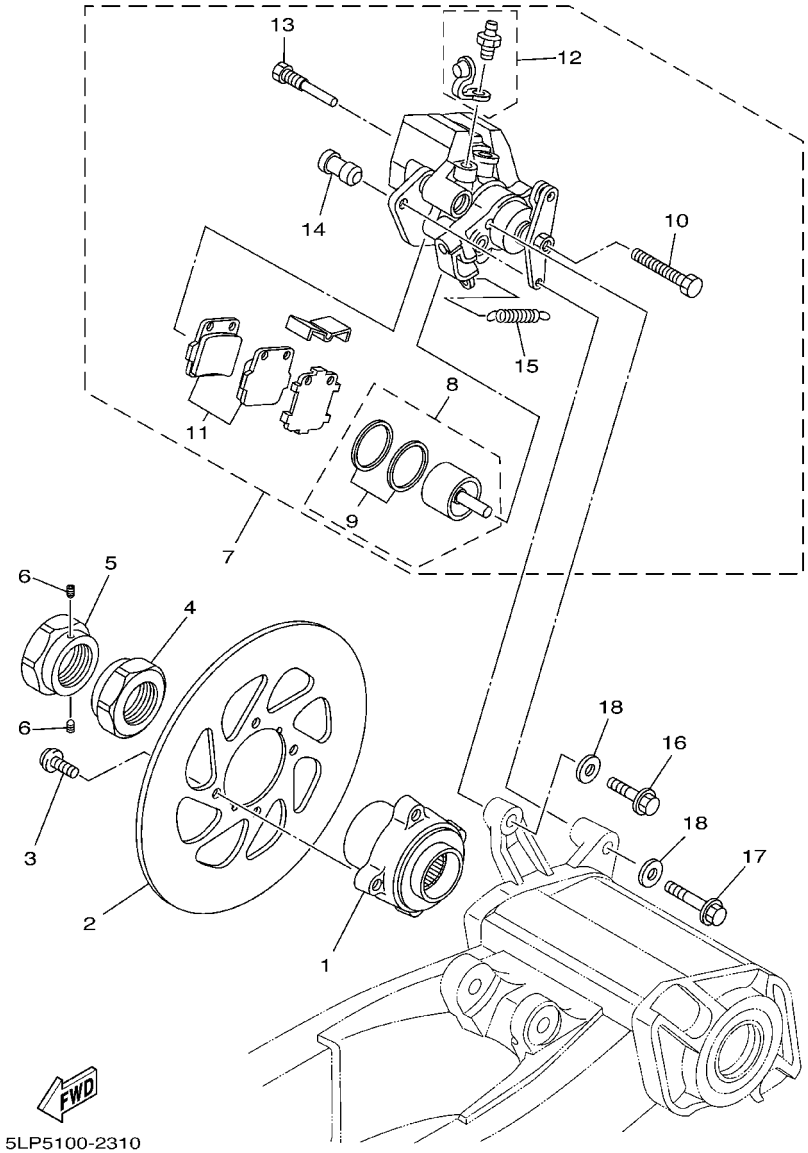

FIG. 31 REAR BRAKE CALIPER

REF. NO.	PART NO.	DESCRIPTION	USA	CAN	FRA			REMARKS
1	5LP–25712–10	BRACKET, DISC	1	1	1			
2	5FK–2582W–00	DISC, REAR BRAKE 2	1	1	1			
3	90109–081F0	BOLT	4	4	4			
4	90170–33008	NUT	1	1	1			
5	90170–33009	NUT	1	1	1			
6	90113–05053	BOLT, SET	2	2	2			
7	5LP–2580W–00	CALIPER ASSY, REAR 2	1	1	1			
8	5LP–W0057–50	.PISTON ASSY, CALIPER	1	1	1			
9	5LP–W0047–50	..CALIPER SEAL KIT	1	1	1			
10	1UY–25972–51	.ADJUSTBOLT	1	1	1			
11	5LP–W0046–50	.BRAKE PAD KIT 2	1	1	1			
12	1UY–W0048–50	.BLEED SCREW KIT	1	1	1			
13	1UY–25924–51	.PIN, PAD	2	2	2			
14	1UY–25917–51	.BOOT, CALIPER	2	2	2			
15	1UY–25977–51	.SPRING, RETURN	1	1	1			
16	90105–08440	BOLT, FLANGE	1	1	1			
17	90105–08659	BOLT, FLANGE	1	1	1			
18	90201–08013	WASHER, PLATE	2	2	2			

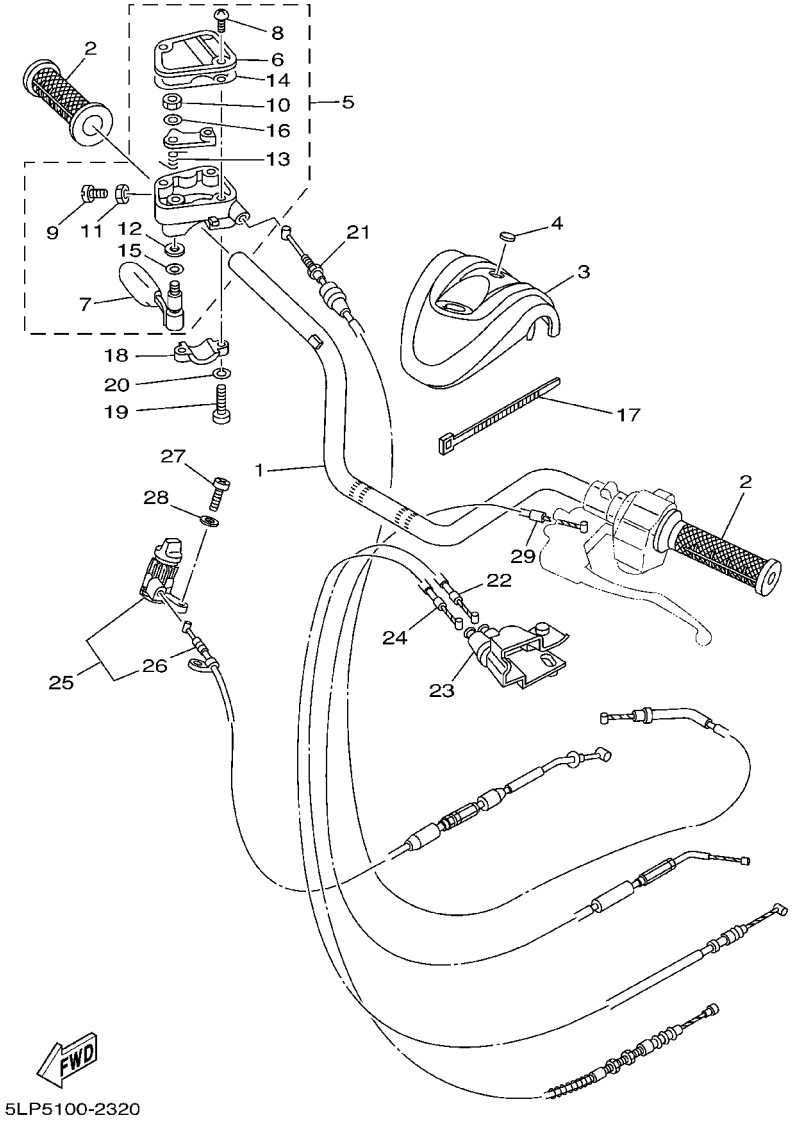

FIG. 32 STEERING HANDLE. CABLE

REF. NO.	PART NO.	DESCRIPTION	USA	CAN	FRA			REMARKS
1	5LP–26111–00	HANDLEBAR	1	1	1			
2	5LP–26241–00	GRIP	2	2	2			
3	5LP–26124–00	PROTECTOR, HANDLEBAR	1	1	1			UR FOR DPBSE
	5LP–26124–10	PROTECTOR, HANDLEBAR	1	1				UR FOR RW
4	5GT–2836B–10	TUNING FORK MARK	1	1	1			
5	4KB–26250–00	THROTTLE LEVER ASSY	1	1	1			
6	4KB–2628F–00	.CAP, GEAR	1	1	1			
7	1NV–2625G–01	.LEVER, THROTTLE	1	1	1			
8	90149–04278	.SCREW	3	3	3			
9	98507–05020	.SCREW, PAN HEAD	1	1	1			
10	95607–05100	.NUT, U	1	1	1			
11	95307–05700	.NUT	1	1	1			
12	93104–09025	.OIL SEAL	1	1	1			
13	1NV–26304–00	.SPRING	1	1	1			
14	4KB–2628G–00	.GASKET	1	1	1			
15	1NV–26129–00	.WASHER	1	1	1			
16	1NV–26398–00	.WASHER	1	1	1			
17	437–83936–01	BAND, SWITCH CORD	2	2	2			
18	4V4–82913–00	HOLDER, LEVER LOWER 1	1	1	1			
19	98507–05020	SCREW, PAN HEAD	2	2	2			
20	92907–05100	WASHER, SPRING	2	2	2			
21	5LP–26311–00	CABLE, THROTTLE 1	1	1	1			
22	5LP–26335–10	CABLE, CLUTCH	1	1	1			
23	1UY–2637A–01	COVER, HANDLE LEVER 2	1	1	1			
24	5LP–26341–00	CABLE, BRAKE	1	1	1			
25	5LP–26150–10	REV. LEVER ASSY.	1	1	1			
26	5LP–2637E–10	.CABLE, CONTROL 1	1	1	1			

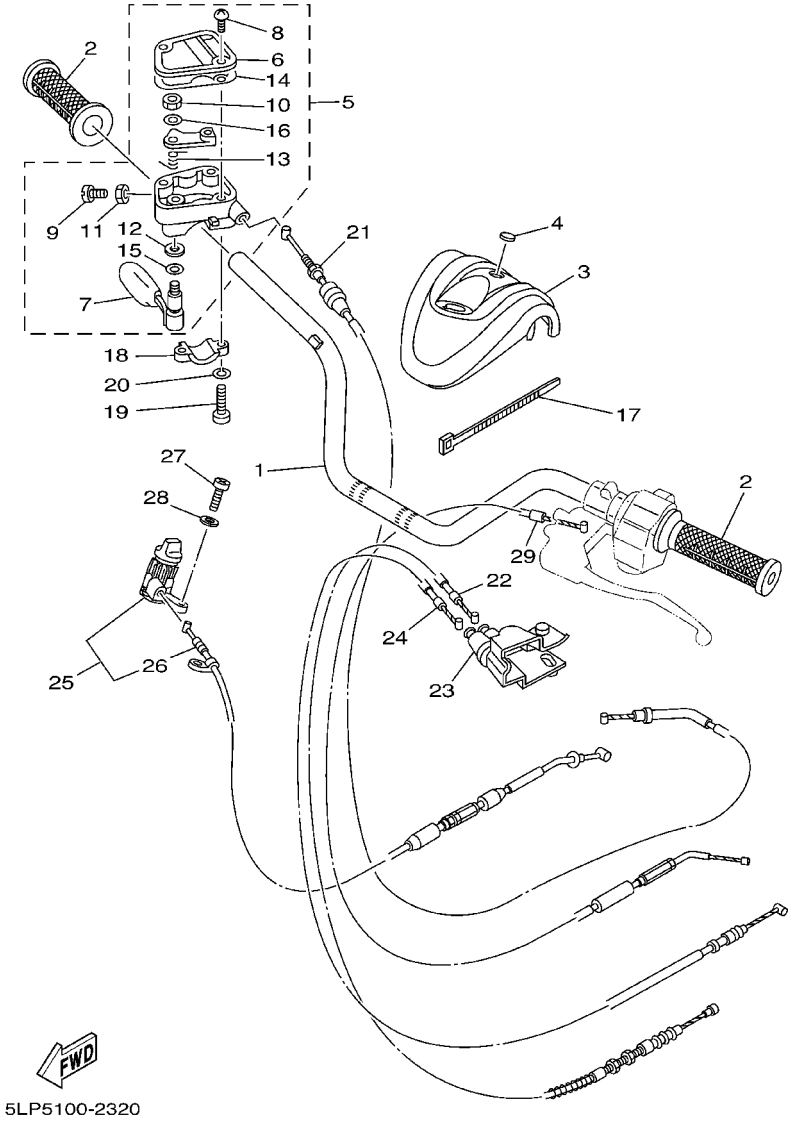

FIG. 32 STEERING HANDLE. CABLE

REF. NO.	PART NO.	DESCRIPTION	USA	CAN	FRA			REMARKS
27	98507–05018	SCREW, PAN HEAD	2	2	2			
28	92907–05600	WASHER, PLATE	2	2	2			
29	5LP–26331–10	CABLE, STARTER 1	1	1	1			

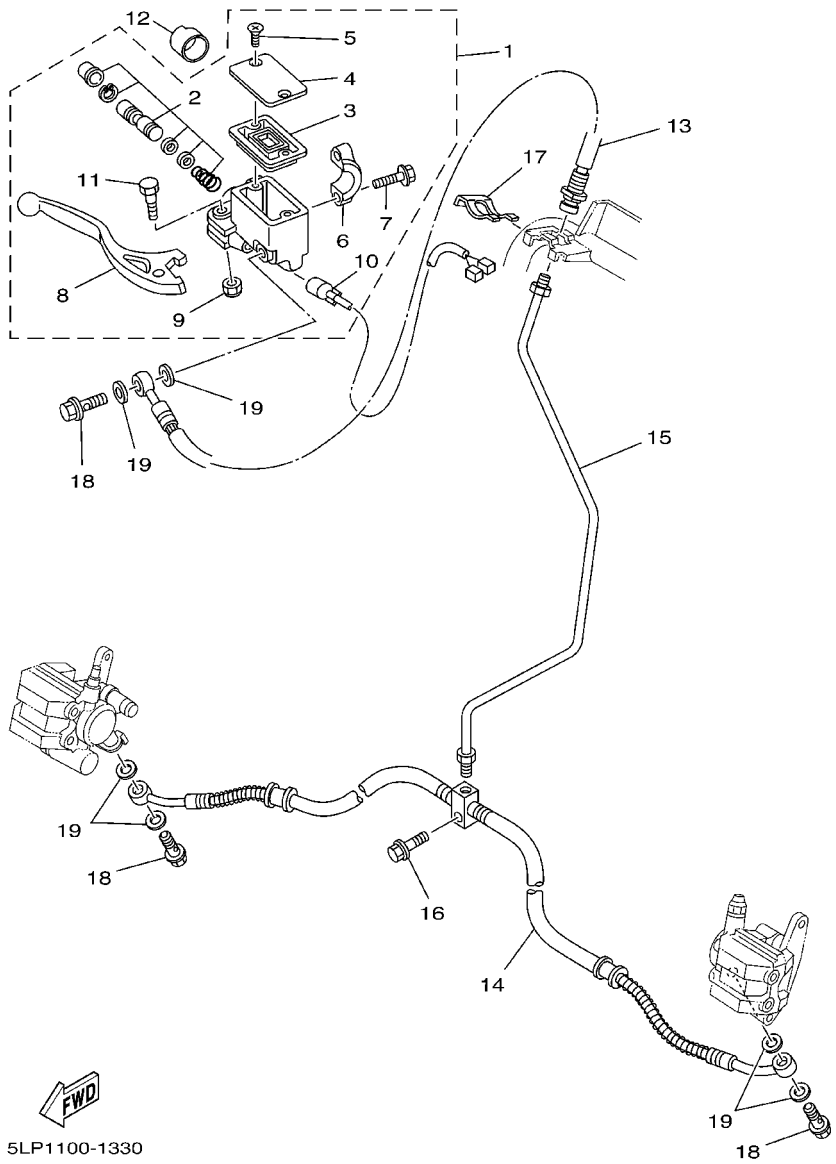

FIG. 33 FRONT MASTER CYLINDER

REF. NO.	PART NO.	DESCRIPTION	USA	CAN	FRA			REMARKS
1	5LP–2583T–01	MASTER CYLINDER ASSY	1	1	1			
2	5LP–W0041–00	.CYLINDER KIT, MASTER	1	1	1			
3	4L0–25854–00	.DIAPHRAGM, RESERVOIR	1	1	1			
4	5LP–25852–01	.CAP, RESERVOIR	1	1	1			
5	4NK–2589H–00	.SCREW	2	2	2			
6	5LP–25867–00	.BRACKET, MASTER CYLINDER	1	1	1			
7	5MV–25833–00	.BOLT, FITTING	2	2	2			
8	5LP–83922–00	.LEVER 2	1	1	1			
9	95604–06100	.NUT, U	1	1	1			
10	5LP–83980–00	.FRONT STOP SWITCH ASSY	1	1	1			
11	5MV–2589F–00	.BOLT, LEVER	1	1	1			
12	1UY–26259–00	COLLAR	1	1	1			
13	5LP–25872–00	HOSE, BRAKE 1	1	1	1			
14	5LP–25873–00	HOSE, BRAKE 2	1	1	1			
15	5LP–25871–00	PIPE, BRAKE	1	1	1			
16	95827–06025	BOLT, FLANGE	1	1	1			
17	2GU–25866–00	CIRCLIP	1	1	1			
18	90401–10159	BOLT, UNION	3	3	3			
19	90201–10118	WASHER, PLATE	6	6	6			

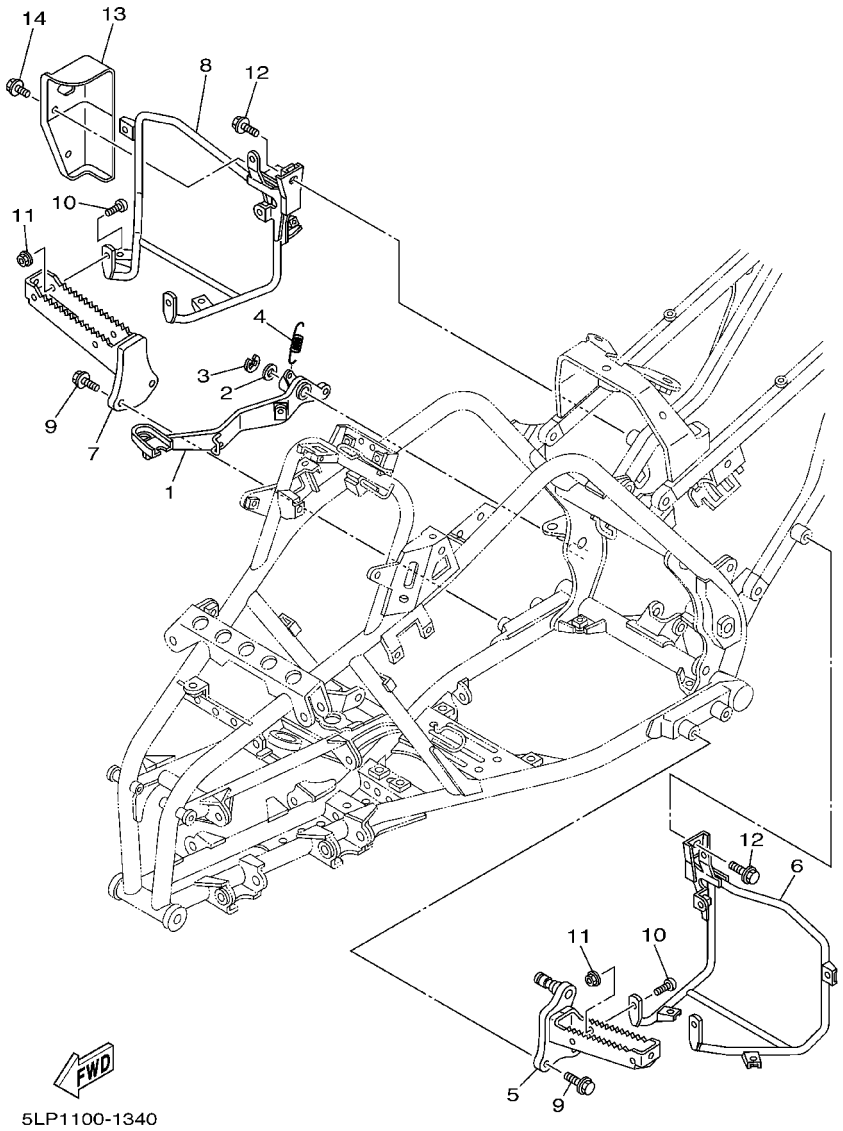

FIG. 34 STAND. FOOTREST

REF. NO.	PART NO.	DESCRIPTION	USA	CAN	FRA			REMARKS
1	5LP–27211–10	PEDAL, BRAKE	1	1	1			
2	90201–15797	WASHER, PLATE	1	1	1			
3	93430–12008	CIRCLIP	1	1	1			
4	90506–20380	SPRING, TENSION	1	1	1			
5	5LP–27411–00	FOOTREST 1	1	1	1			
6	5LP–27445–00	PLATE 1	1	1	1			
7	5LP–27421–00	FOOTREST 2	1	1	1			
8	5LP–27446–00	PLATE 2	1	1	1			
9	95817–10025	BOLT, FLANGE	4	4	4			
10	92017–08016	BOLT, BUTTON HEAD	4	4	4			
11	95607–08200	NUT, SELF–LOCKING	4	4	4			
12	95827–08012	BOLT, FLANGE	2	2	2			
13	5LP–27453–00	COVER 1	1	1	1			
14	90109–06036	BOLT	2	2	2			

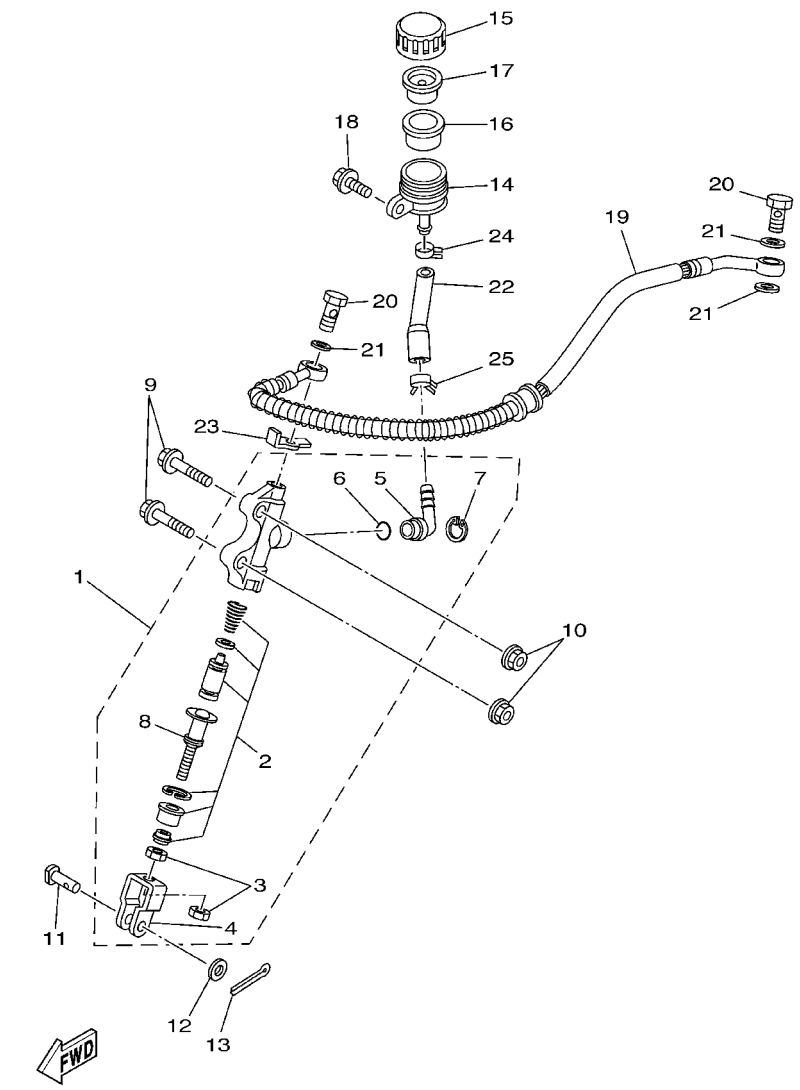

5LP1100-1350

FIG. 35 REAR MASTER CYLINDER

REF. NO.	PART NO.	DESCRIPTION	USA	CAN	FRA			REMARKS
1	4PT–2580E–00	REAR MASTER CYLINDER ASSY	1	1	1			
2	4BA–W0042–50	.CYLINDER KIT, MASTER	1	1	1			
3	95302–08600	.NUT	2	2	2			
4	2YK–27222–00	.JOINT	1	1	1			
5	2YK–2582A–00	.JOINT	1	1	1			
6	93210–15620	.O–RING	1	1	1			
7	2VN–25866–00	.CIRCLIP	1	1	1			
8	3KW–27234–00	.PIN, BRAKE ROD	1	1	1			
9	95027–08030	BOLT, FLANGE	2	2	2			
10	95607–08200	NUT, SELF–LOCKING	1	1	1			
11	90240–08124	PIN, CLEVIS	1	1	1			
12	90201–08083	WASHER, PLATE	1	1	1			
13	91401–16012	PIN, COTTER	1	1	1			
14	2VN–25894–00	TANK, RESERVOIR	1	1	1			
15	4PX–25852–00	CAP, RESERVOIR	1	1	1			
16	2VN–25854–00	DIAPHRAGM, RESERVOIR	1	1	1			
17	2VN–25855–00	BUSH,DIAPHRAGM	1	1	1			
18	90105–06690	BOLT, FLANGE	1	1	1			
19	5LP–25874–00	HOSE, BRAKE	1	1	1			
20	90401–10159	BOLT, UNION	2	2	2			
21	90201–10118	WASHER, PLATE	3	3	3			
22	5LP–25895–00	HOSE, RESERVOIR	1	1	1			
23	5LP–25844–00	WASHER, LOCK	1	1	1			
24	90467–11044	CLIP	1	1	1			
25	90467–14057	CLIP	1	1	1			

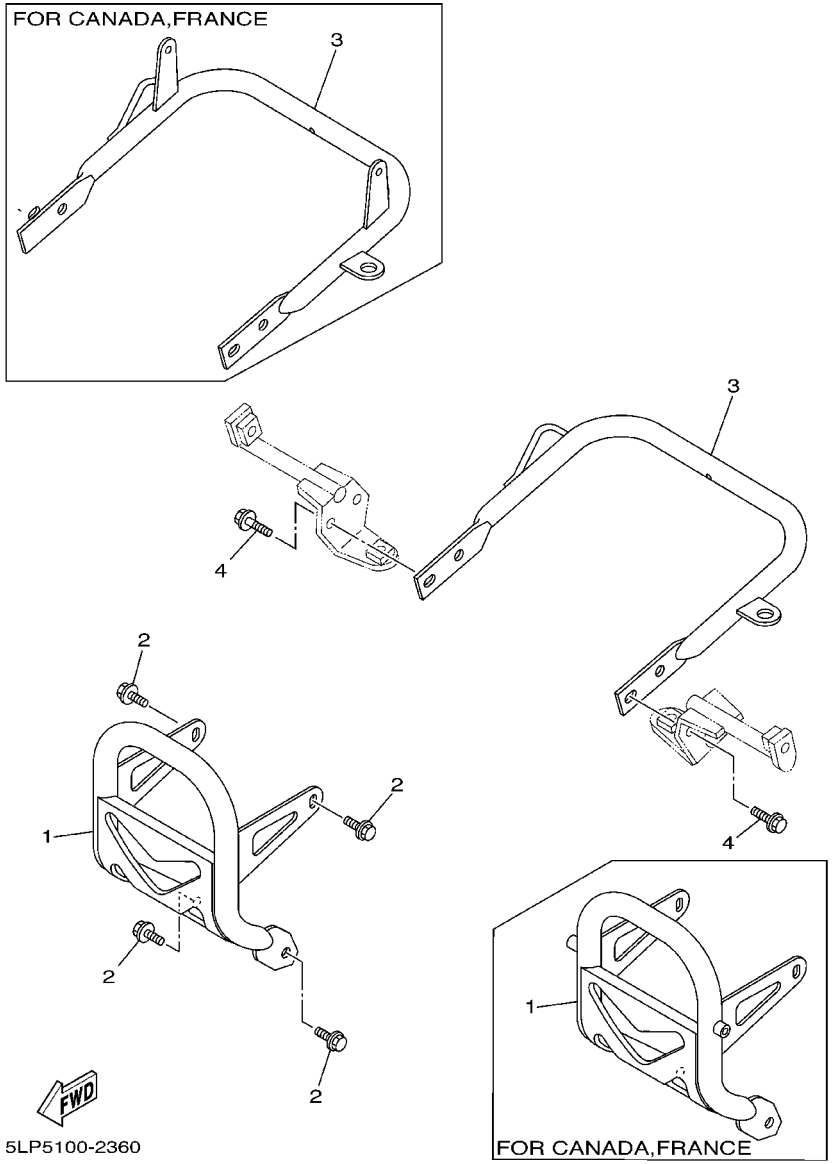

FIG. 36 GUARD

REF. NO.	PART NO.	DESCRIPTION	USA	CAN	FRA			REMARKS
1	5LP–2845N–00	BAR, CARRY FRONT	1					SILVER
	5LP–2845N–10	BAR, CARRY FRONT		1	1			SILVER
2	95817–08014	BOLT, FLANGE	4	4	4			
3	5LP–2845R–00	BAR, CARRY REAR	1					SILVER
	5LP–2845R–10	BAR, CARRY REAR		1	1			SILVER
4	95817–08020	BOLT, FLANGE	4	4	4			

FIG. 37 GENERATOR

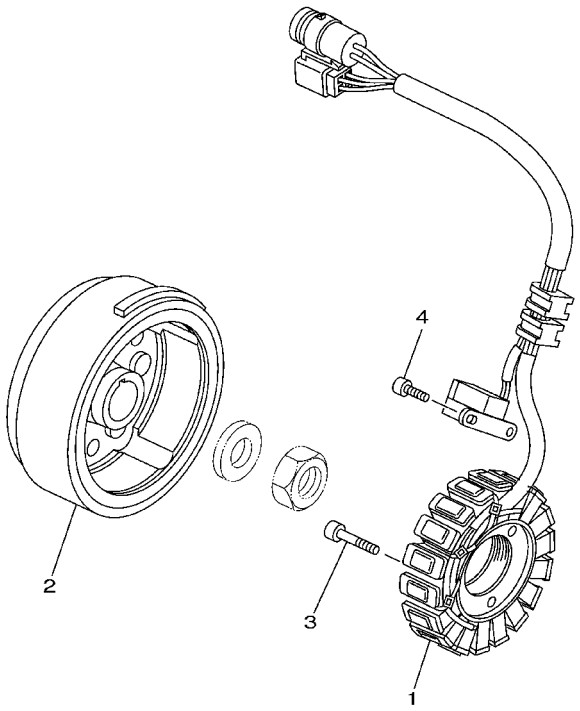

5LP1100-1370

REF. NO.	PART NO.	DESCRIPTION	USA	CAN	FRA			REMARKS
1	5LP–81410–01	STATOR ASSY	1	1	1			
2	5LP–81450–00	ROTOR ASSY	1	1	1			
3	91317–05025	BOLT	3	3	3			
4	91317–05012	BOLT	2	2	2			

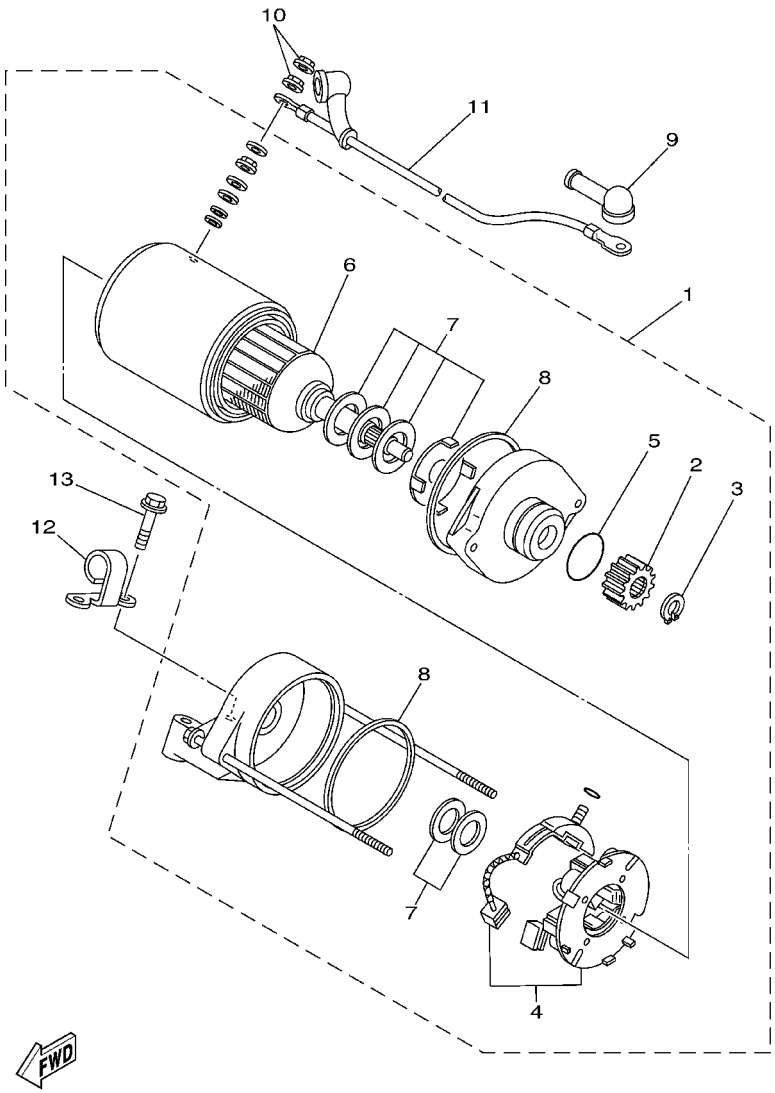

5LP1100-1380

FIG. 38 STARTING MOTOR

REF. NO.	PART NO.	DESCRIPTION	USA	CAN	FRA			REMARKS
1	3SX–81890–00	MOTOR ASSY	1	1	1			
2	1VJ–15511–00	.GEAR, STARTING MOTOR	1	1	1			
3	93440–11024	.CIRCLIP	1	1	1			
4	3AJ–81801–00	.BRUSH SET	1	1	1			
5	1FK–81847–00	.O–RING	1	1	1			
6	3AJ–81850–00	.ARMATURE ASSY	1	1	1			
7	3AJ–81809–00	.WASHER KIT	1	1	1			
8	11H–81844–00	.GASKET	2	2	2			
9	4G0–81871–00	CAP	1	1	1			
10	4XV–8182A–00	NUT	2	2	2			
11	3XF–81815–00	CORD, STARTER MOTOR	1	1	1			
12	5LP–26393–00	HOLDER	1	1	1			
13	95817–06030	BOLT, FLANGE	2	2	2			

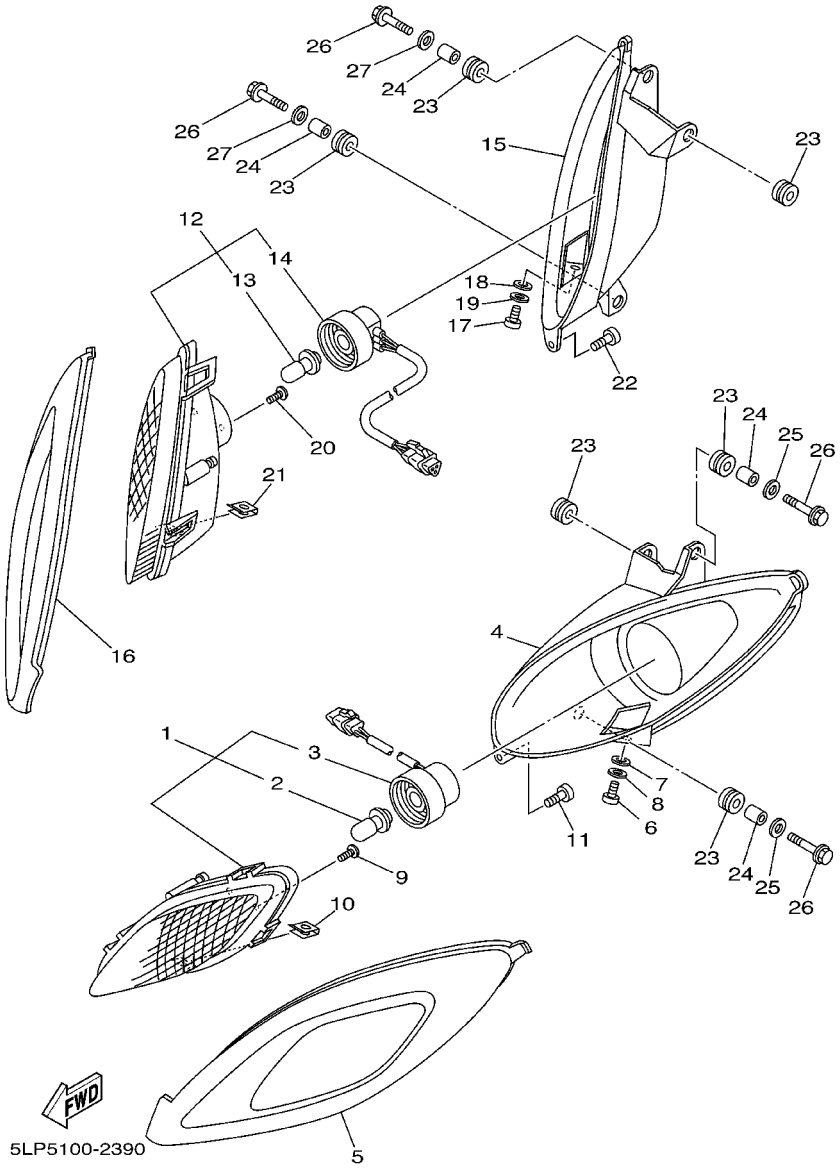

FIG. 39 HEADLIGHT

REF. NO.	PART NO.	DESCRIPTION	USA	CAN	FRA			REMARKS
1	5LP–84310–01	HEADLIGHT UNIT ASSY	1	1	1			
2	4KB–84314–00	.BULB (12V30/30W)	1	1	1			
3	5LP–84340–00	.SOCKET CORD ASSY 1	1	1	1			
4	5LP–84111–00	BODY, HEADLIGHT	1	1	1			
5	5LP–8411G–00	RIM	1	1	1			
6	5LP–8433E–00	SCREW, ADJUSTING	1	1	1			
7	5LP–84344–00	WASHER, PLAIN	1	1	1			
8	5LP–84344–10	WASHER, PLAIN	1	1	1			
9	5LP–84331–00	SCREW, RIM ADJUSTING	2	2	2			
10	5LP–84334–00	NUT, ADJUSTING	1	1	1			
11	5LP–84526–00	SCREW	1	1	1			
12	5LP–84310–11	HEADLIGHT UNIT ASSY	1	1	1			
13	4KB–84314–00	.BULB (12V30/30W)	1	1	1			
14	5LP–84340–00	.SOCKET CORD ASSY 1	1	1	1			
15	5LP–84111–10	BODY, HEADLIGHT	1	1	1			
16	5LP–8411G–10	RIM	1	1	1			
17	5LP–8433E–00	SCREW, ADJUSTING	1	1	1			
18	5LP–84344–00	WASHER, PLAIN	1	1	1			
19	5LP–84344–10	WASHER, PLAIN	1	1	1			
20	5LP–84331–00	SCREW, RIM ADJUSTING	2	2	2			
21	5LP–84334–00	NUT, ADJUSTING	1	1	1			
22	5LP–84526–00	SCREW	1	1	1			
23	90480–14102	GROMMET	6	6	6			
24	90387–06595	COLLAR	4	4	4			
25	90201–06557	WASHER, PLATE	2	2	2			
26	95807–06025	BOLT, FLANGE	4	4	4			
27	90201–06557	WASHER, PLATE	2	2	2			

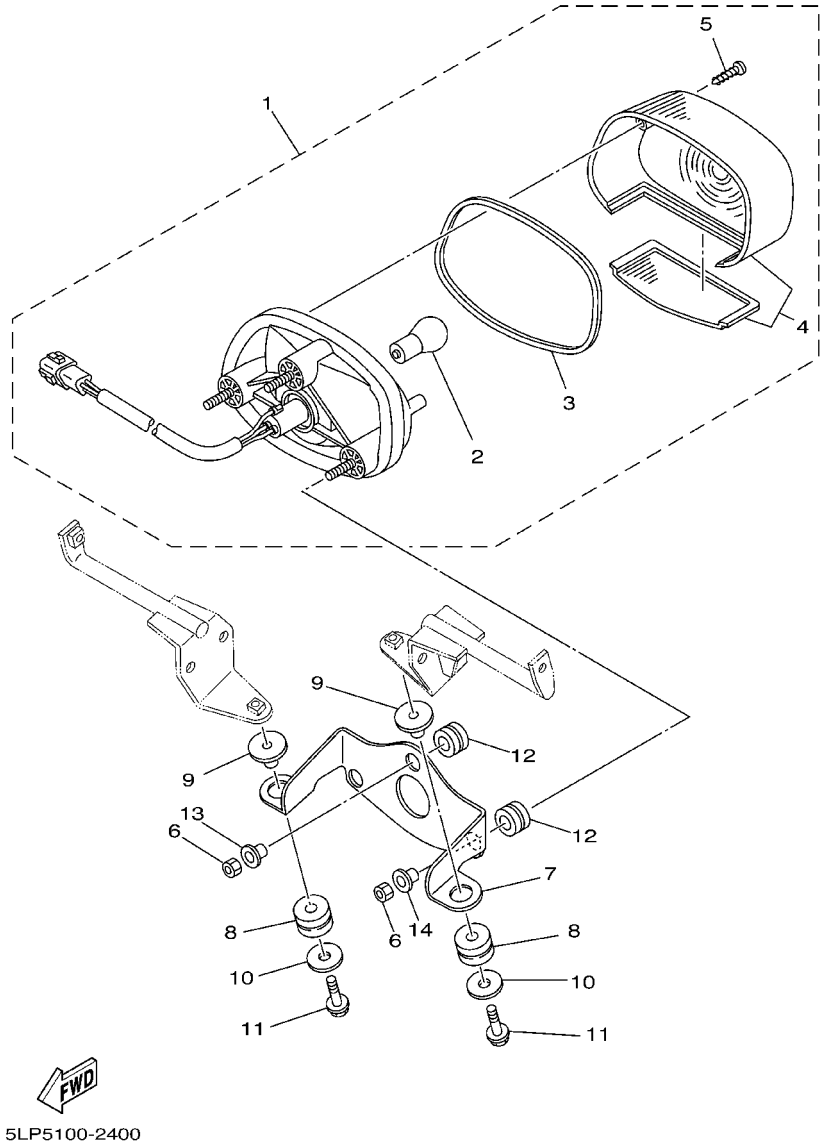

FIG. 40 TAILLIGHT

REF. NO.	PART NO.	DESCRIPTION	USA	CAN	FRA			REMARKS
1	5LP–84700–10	TAILLIGHT ASSY	1					
2	256–84714–60	.BULB (12V–21/5W)	1					
3	4TR–84723–00	.GASKET, TAIL LENS	1					
4	4TR–84733–00	.LENS, TAILLIGHT	1					
5	97702–40620	.SCREW, TAPPING	2					
6	95307–06600	NUT	3					
7	5LP–84702–30	BRACKET, TAILLIGHT	1					
8	90480–15528	GROMMET	2					
9	90387–075H4	COLLAR	2					
10	90201–06074	WASHER, PLATE	2					
11	95807–06030	BOLT, FLANGE	2					
12	90480–14555	GROMMET	3					
13	90387–075U2	COLLAR	1					
14	90387–07391	COLLAR	2					

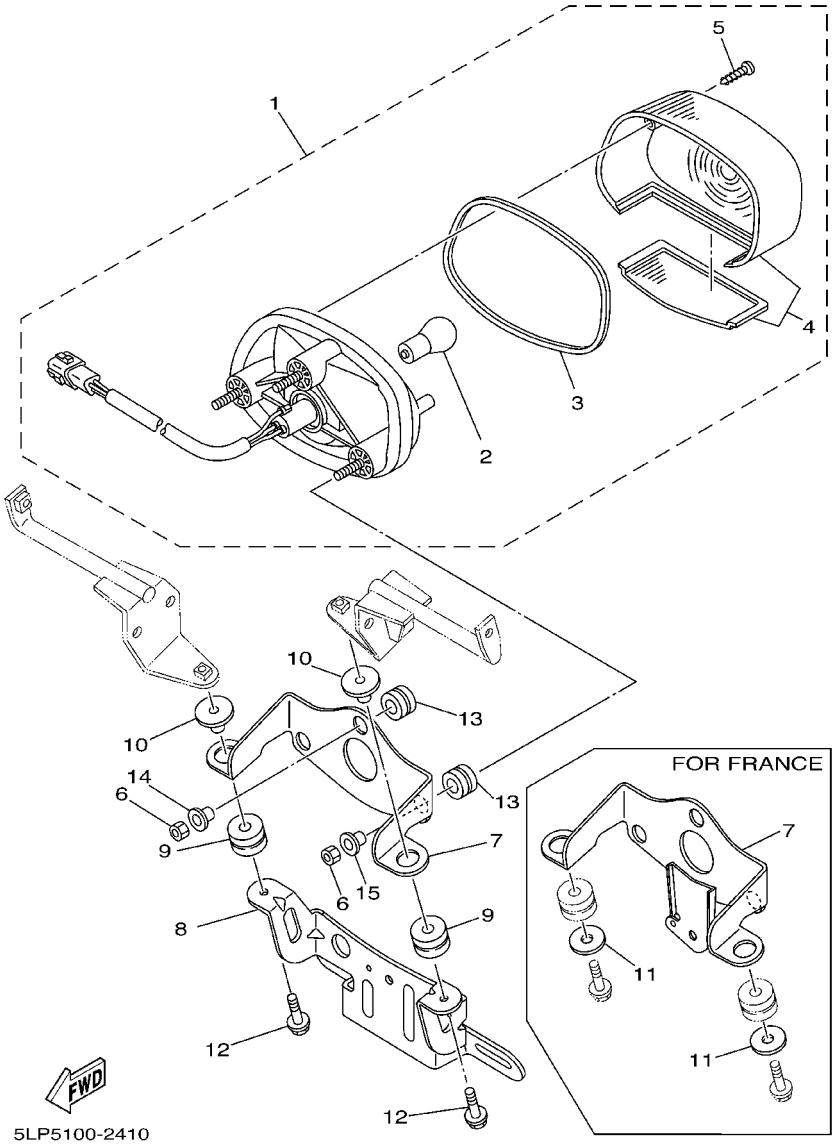

FIG. 41 TAILLIGHT 2

REF. NO.	PART NO.	DESCRIPTION	USA	CAN	FRA			REMARKS
1	5LP–84700–10	TAILLIGHT ASSY		1	1			
2	256–84714–60	.BULB (12V–21/5W)		1	1			
3	4TR–84723–00	.GASKET, TAIL LENS		1	1			
4	4TR–84733–00	.LENS, TAILLIGHT		1	1			
5	97702–40620	.SCREW, TAPPING		2	2			
6	95307–06600	NUT		3	3			
7	5LP–84702–30	BRACKET, TAILLIGHT		1				
	5LP–84702–40	BRACKET, TAILLIGHT			1			
8	5LP–84751–00	BRACKET, LICENSE		1				
9	90480–15528	GROMMET		2	2			
10	90387–075H4	COLLAR		2	2			
11	90201–06074	WASHER, PLATE			2			
12	95807–06030	BOLT, FLANGE		2	2			
13	90480–14555	GROMMET		3	3			
14	90387–075U2	COLLAR		1	1			
15	90387–07391	COLLAR		2	2			

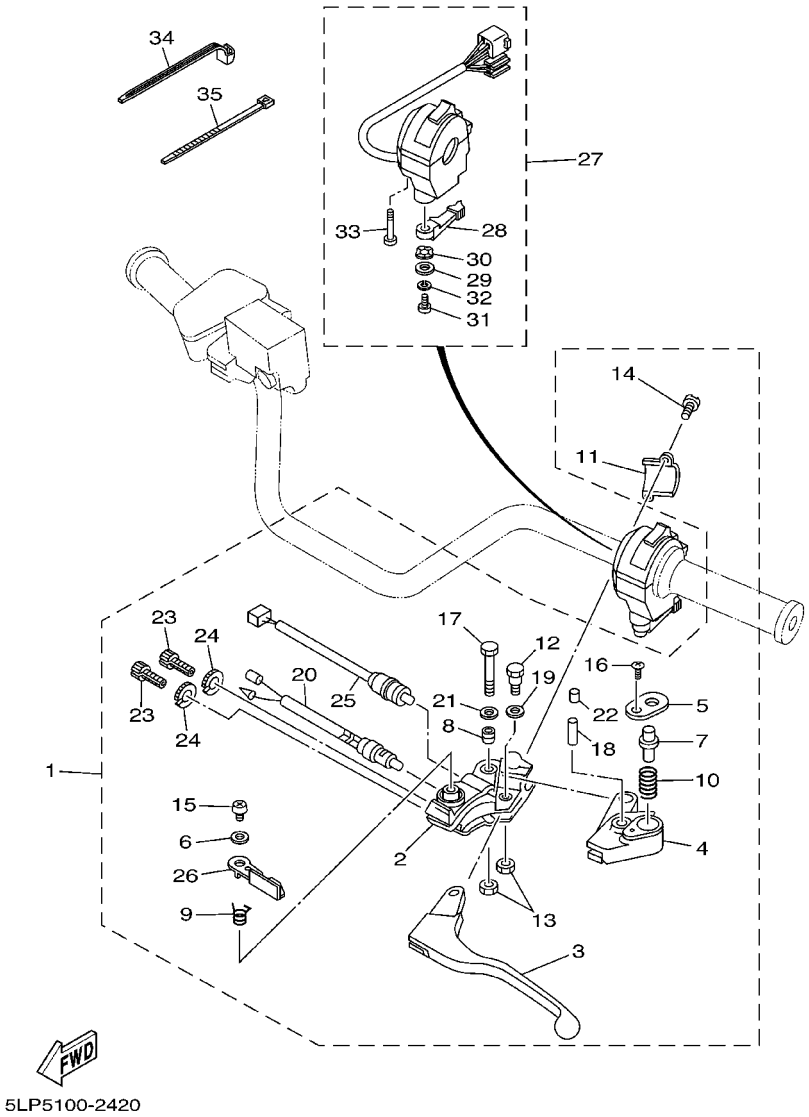

FIG. 42 HANDLE SWITCH. LEVER

REF. NO.	PART NO.	DESCRIPTION	USA	CAN	FRA			REMARKS
1	5LP–82910–10	LEVER HOLDER ASSY (LEFT)	1	1	1			
2	5LP–82911–10	.HOLDER, LEVER 1	1	1	1			
3	5LP–83912–00	.LEVER 1	1	1	1			
4	5LP–83922–10	.LEVER 2	1	1	1			
5	1UY–83935–10	.COVER	1	1	1			
6	5LP–83909–10	.WASHER, SPECIAL	1	1	1			
7	1UY–83967–10	.PIN, LOCK 1	1	1	1			
8	1UY–83913–00	.COLLAR, LEVER 1	1	1	1			
9	1UY–83966–00	.SPRING, RETURN	1	1	1			
10	1UY–83962–00	.SPRING	1	1	1			
11	5LP–82913–10	.HOLDER, LEVER LOWER 1	1	1	1			
12	2H7–83945–00	.BOLT, LEVER	1	1	1			
13	5LP–84126–10	.NUT, LENS FITTING	2	2	2			
14	5LP–83991–10	.SCREW, LEVER 1	2	2	2			
15	5LP–83925–10	.SCREW, LEVER FITTING	1	1	1			
16	5LP–8396X–10	.SCREW, LEVER FITTING	1	1	1			
17	5LP–83945–10	.BOLT, LEVER	1	1	1			
18	91690–40022	.PIN, SPRING	1	1	1			
19	5LP–8398X–10	.WASHER, PLAIN	1	1	1			
20	1UY–82917–00	.SWITCH	1	1	1			
21	5LP–84127–10	.WASHER, SPECIAL	1	1	1			
22	1UY–83956–00	.CAP 1	1	1	1			
23	90123–08046	.BOLT	2	2	2			
24	90179–08148	.NUT	2	2	2			
25	4KB–82917–00	.SWITCH	1	1	1			
26	4KB–W8393–00	.LOCK, LEVER ASSY	1	1	1			
27	5LP–83973–01	SWITCH, HANDLE 3	1	1	1			

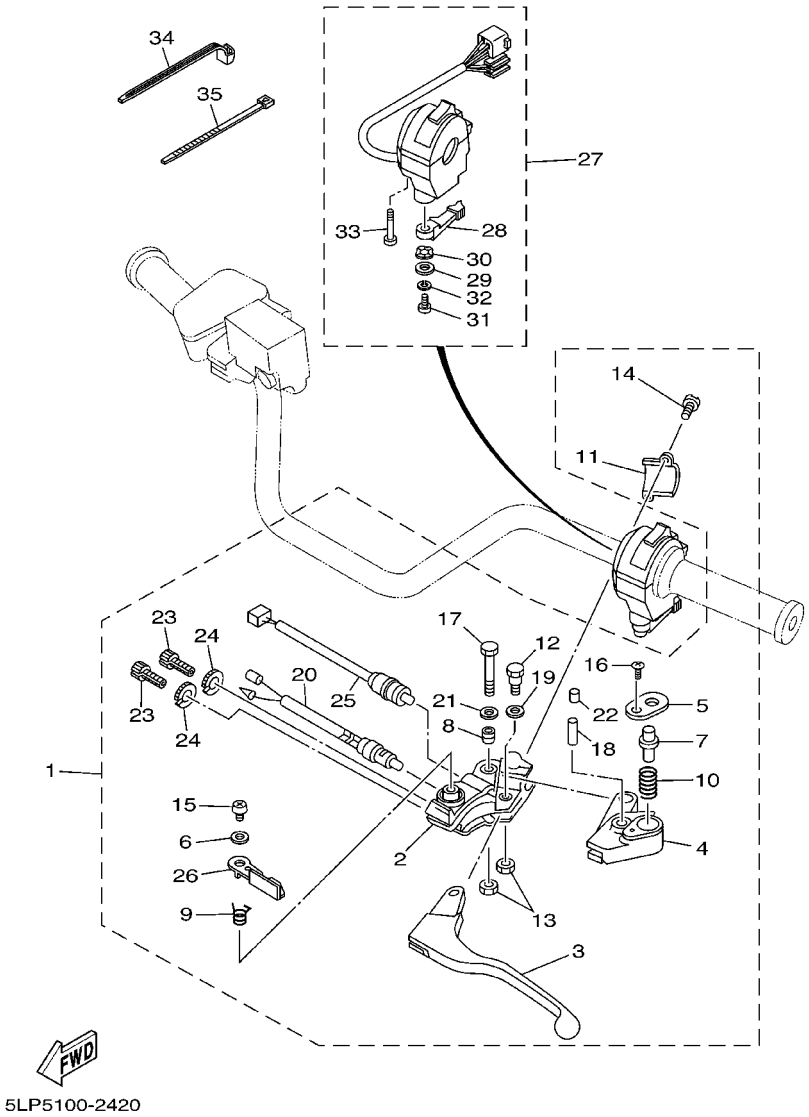

FIG. 42 HANDLE SWITCH. LEVER

REF. NO.	PART NO.	DESCRIPTION	USA	CAN	FRA			REMARKS
28	5GH–83941–00	.LEVER, STARTER	1	1	1			
29	1UY–83909–00	.WASHER, SPECIAL	1	1	1			
30	3L4–83943–00	.WASHER, STARTER	1	1	1			
31	98517–05012	.SCREW, PAN HEAD	1	1	1			
32	92907–05100	.WASHER, SPRING	1	1	1			
33	98507–05030	.SCREW, PAN HEAD	2	2	2			
34	90464–13077	CLAMP	1	1	1			
35	437–83936–01	BAND, SWITCH CORD	1	1	1			

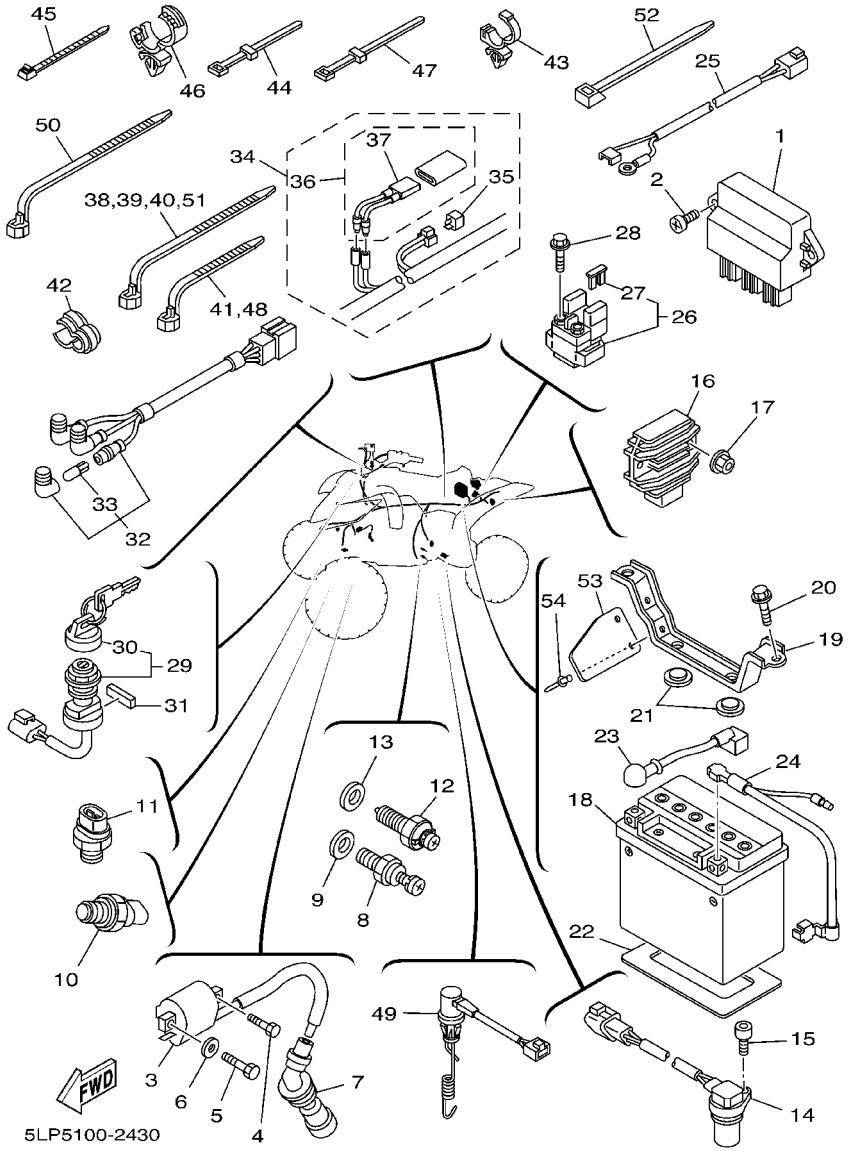

FIG. 43 ELECTRICAL 1

REF. NO.	PART NO.	DESCRIPTION	USA	CAN	FRA			REMARKS
1	5LP–85540–20	C.D.I. UNIT ASSY	1	1	1			
2	98907–06016	SCREW, BIND	2	2	2			
3	4KJ–82310–10	IGNITION COIL ASSY	1	1	1			
4	90109–06723	BOLT	1	1	1			
5	97007–06020	BOLT	1	1	1			
6	92907–06600	WASHER, PLATE	1	1	1			
7	3YF–82370–00	PLUG CAP ASSY	1	1	1			
8	5LP–82540–00	NEUTRAL SWITCH ASSY	1	1	1			
9	90430–10148	GASKET	1	1	1			
10	5GH–82560–00	THERMO SWITCH ASSY	1	1	1			
11	5LP–82560–00	THERMO SWITCH ASSY	1	1	1			
12	4GY–82540–10	NEUTRAL SWITCH ASSY	1	1	1			
13	90430–10148	GASKET	1	1	1			
14	5LP–83755–00	SENSOR, SPEED	1	1	1			
15	90110–06124	BOLT, HEXAGON SOCKET HEAD	1	1	1			
16	5GT–81960–00	RECTIFIER & REGULATOR ASSY	1	1	1			
17	95707–06500	NUT, FLANGE	2	2	2			
18	3XW–82100–01	BATTERY ASSY (YTX14–BS)	1	1	1			
19	5LP–82128–00	BRACKET, BATTERY	1	1	1			
20	95807–06012	BOLT, FLANGE	2	2	2			
21	371–82121–00	PAD, BATTERY	2	2	2			
22	5LP–82122–00	SEAT, BATTERY	1	1	1			
23	5LP–82115–00	WIRE, PLUS LEAD	1	1	1			
24	5LP–82116–00	WIRE, MINUS LEAD	1	1	1			
25	5LP–82541–00	WIRE, LEAD	1	1	1			
26	4XE–81940–00	STARTER RELAY ASSY	1	1	1			
27	2GH–82151–00	.FUSE (20A–BL)	2	2	2			

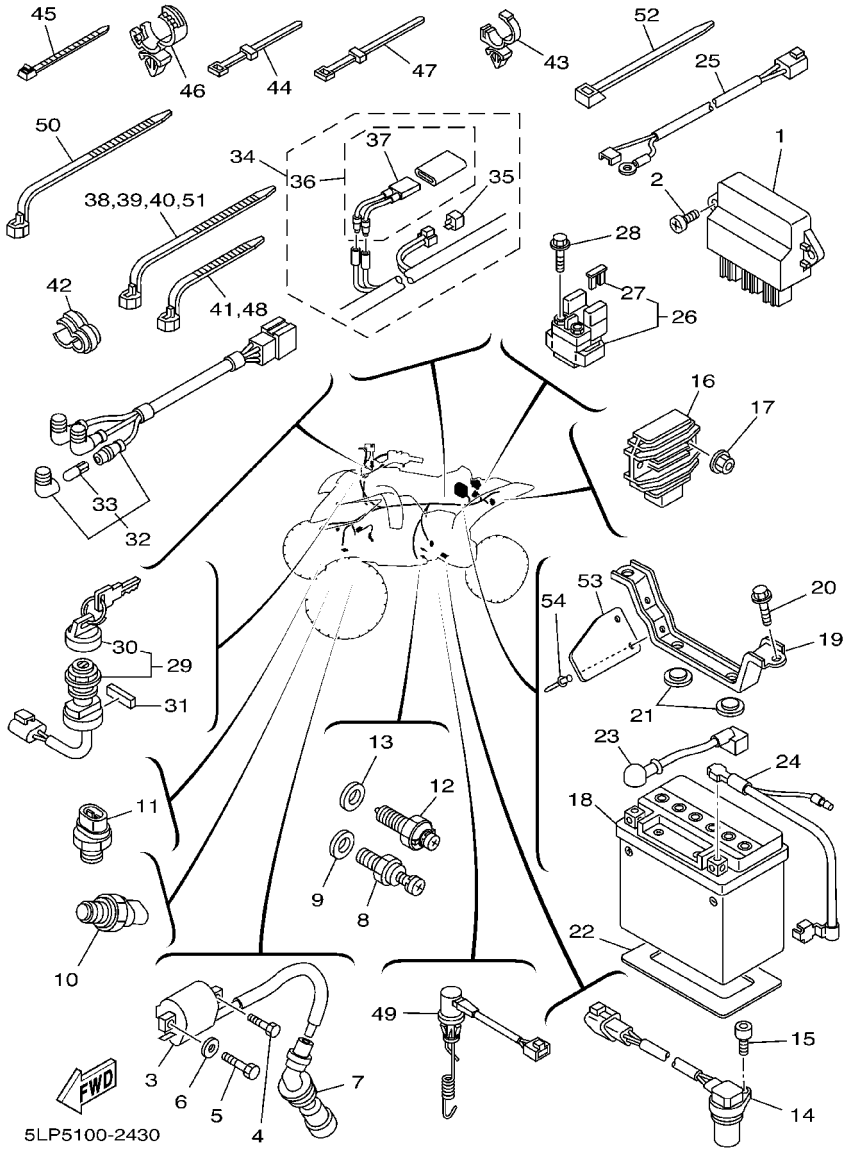

FIG. 43 ELECTRICAL 1

REF. NO.	PART NO.	DESCRIPTION	USA	CAN	FRA			REMARKS
28	95027–06008	BOLT, FLANGE	2	2	2			
29	5LP–82510–00	MAIN SWITCH ASSY	1	1	1			
30	3HN–82579–00	.CAP, KEY	1	1	1			
31	5LP–82176–00	DAMPER	1	1	1			
32	5LP–83530–00	PILOT LIGHT ASSY	1	1	1			
33	5GH–83516–00	.BULB (14V–1.7W)	3	3	3			
34	5LP–82590–10	WIRE HARNESS ASSY	1	1	1			
35	3WP–81980–00	.DIODE ASSY	1	1	1			
36	5GT–82180–00	.CIRCUIT BREAKER ASSY	1	1	1			
37	5GT–82560–00	..THERMO SWITCH ASSY	1	1	1			
38	90464–15195	CLAMP	1	1	1			
39	90464–15195	CLAMP	2	2	2			
40	90464–15195	CLAMP	2	2	2			
41	90464–13073	CLAMP	1	1	1			
42	90464–15065	CLAMP	3	3	3			
43	90464–20181	CLAMP	1	1	1			
44	437–83936–01	BAND, SWITCH CORD	1	1	1			
45	90465–13M11	CLAMP	1	1	1			
46	90464–07209	CLAMP	1	1	1			
47	3TB–83936–00	BAND, SWITCH CORD	1	1	1			
48	90464–13073	CLAMP	1	1	1			
49	5LP–82530–00	STOP SWITCH ASSY	1	1	1			
50	90464–13077	CLAMP	1	1	1			
51	90464–15195	CLAMP	1	1	1			
52	90464–16061	CLAMP	1	1	1			
53	5LP–82129–00	COVER, BATTERY	1	1	1			
54	90267–48120	RIVET, BLIND	2	2	2			

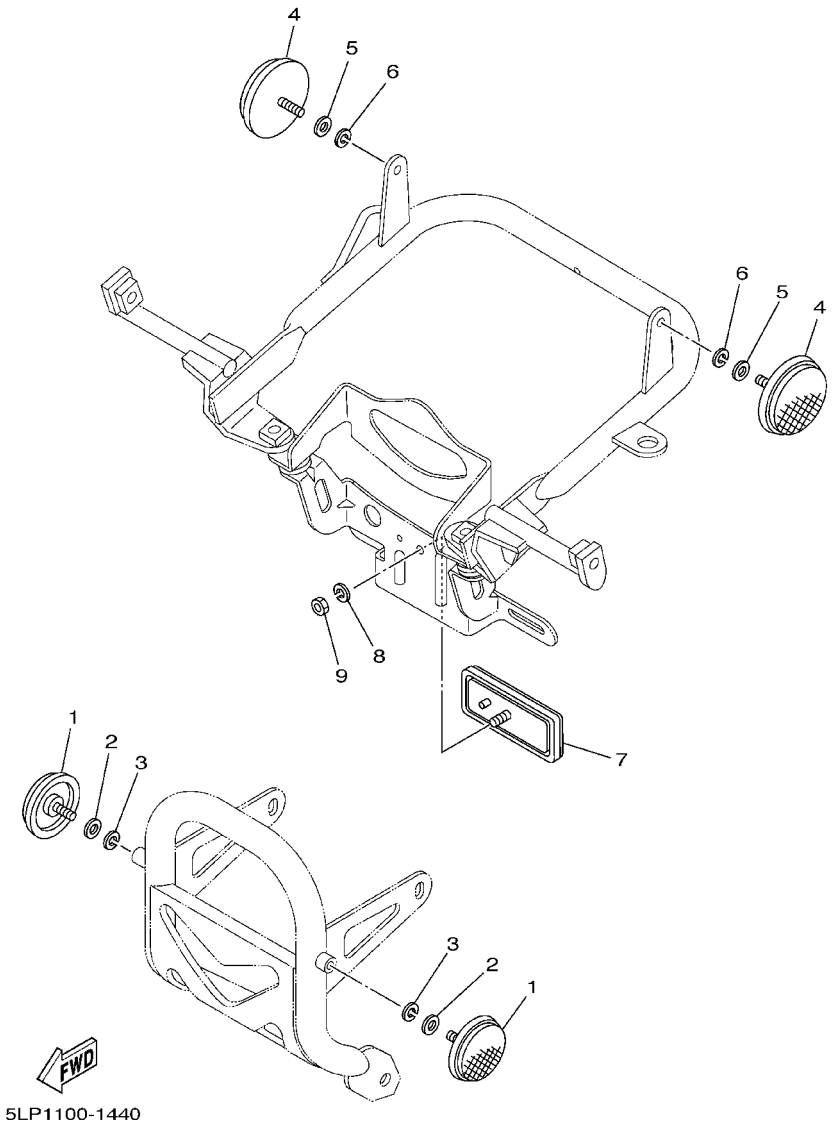

FIG. 44 ELECTRICAL 2

REF. NO.	PART NO.	DESCRIPTION	USA	CAN	FRA			REMARKS
1	2EK–85111–00	REFLECTOR, FRONT 1		2	2			
2	92907–05200	WASHER		2	2			
3	92907–05100	WASHER, SPRING		2	2			
4	449–85131–02	REFLECTOR, REAR 1		2	2			
5	92907–05200	WASHER		2	2			
6	92907–05100	WASHER, SPRING		2	2			
7	3Y6–85130–02	REAR REFLECTOR ASSY		1	1			
8	92907–05100	WASHER, SPRING		1	1			
9	95307–05600	NUT		1	1			

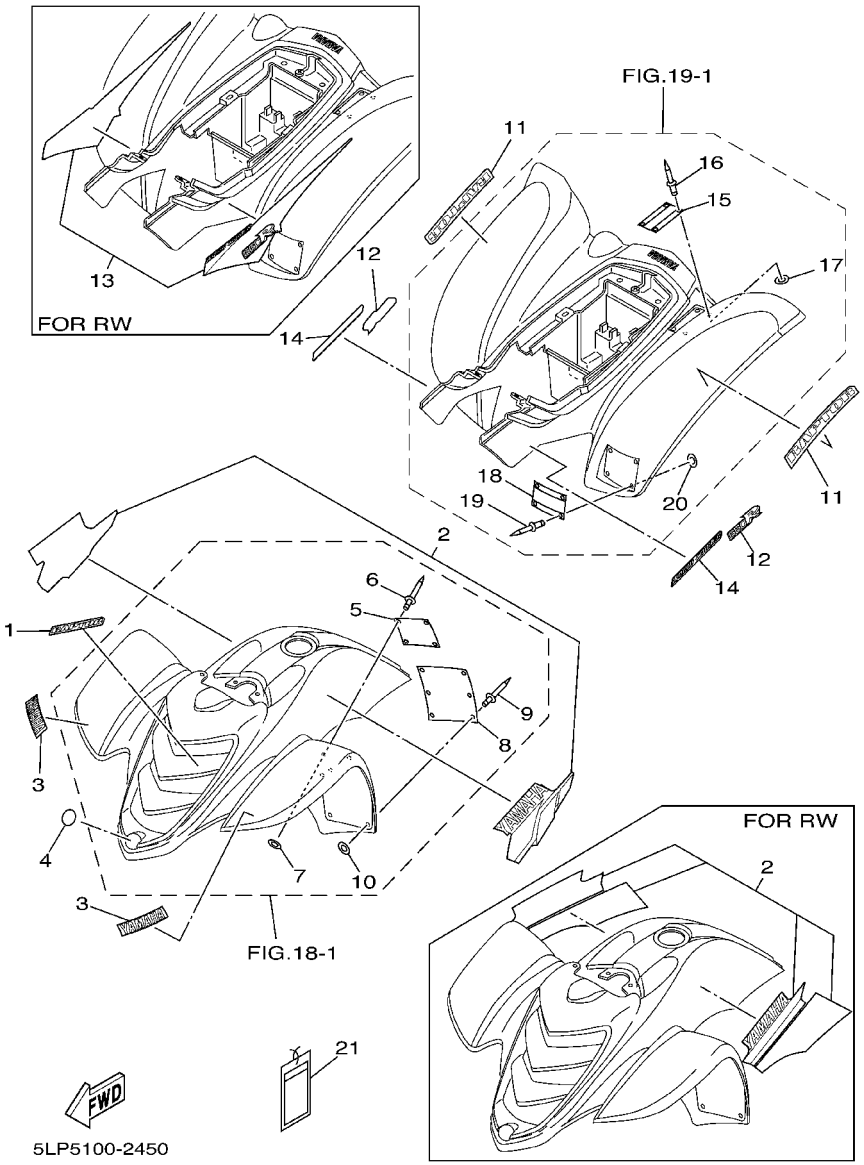

FIG. 45 EMBLEM.LABEL 1

REF. NO.	PART NO.	DESCRIPTION	USA	CAN	FRA			REMARKS
1	5LP–21565–00	EMBLEM, 2	1					UR FOR DPBSE
	5LP–21565–20	EMBLEM, 2	1					UR FOR RW
2	5LP–21570–20	GRAPHIC SET, FRONT FENDER	1					UR FOR DPBSE
	5LP–21570–30	GRAPHIC SET, FRONT FENDER	1					UR FOR RW
3	3GD–2153E–00	EMBLEM, YAMAHA	2					UR FOR DPBSE
	3GD–2153E–10	EMBLEM, YAMAHA	2					UR FOR RW
4	5KM–2175B–00	TUNING FORK MARK	1					
5	5FE–21697–01	LABEL, CAUTION 2	1					
6	90267–32004	RIVET, BLIND	4					
7	90201–03313	WASHER, PLATE	4					
8	5FE–21568–01	LABEL, WARNING	1					
9	90267–32004	RIVET, BLIND	6					
10	90201–03313	WASHER, PLATE	6					
11	5LP–21609–20	EMBLEM	2					UR FOR DPBSE
	5LP–21609–30	EMBLEM	2					UR FOR RW
12	5LP–2163G–10	EMBLEM 1	2					FOR DPBSE
13	5LP–2165A–10	GRAPHIC SET,REAR FENDER	1					FOR RW
14	5LP–2163H–10	EMBLEM 2	2					FOR DPBSE
15	5FE–2151H–01	LABEL 5	1					
16	90267–32004	RIVET, BLIND	4					
17	90201–03313	WASHER, PLATE	4					
18	5LP–21696–00	LABEL, CAUTION	1					
19	90267–32004	RIVET, BLIND	4					
20	90201–03313	WASHER, PLATE	4					
21	5LP–2819R–00	TAG, WARNING	1					

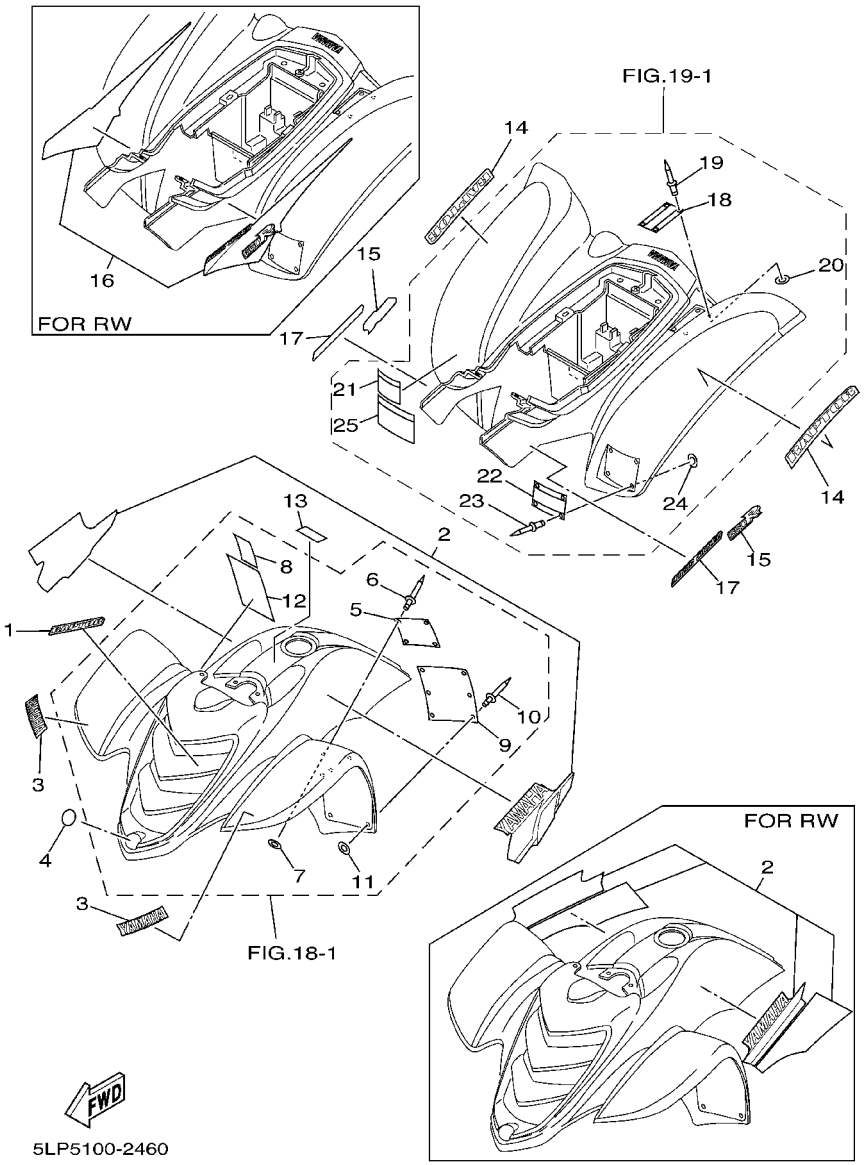

FIG. 46 EMBLEM.LABEL 2

REF. NO.	PART NO.	DESCRIPTION	USA	CAN	FRA			REMARKS
1	5LP–21565–00	EMBLEM, 2		1				UR FOR DPBSE
	5LP–21565–20	EMBLEM, 2		1				UR FOR RW
2	5LP–21570–20	GRAPHIC SET, FRONT FENDER		1				UR FOR DPBSE
	5LP–21570–30	GRAPHIC SET, FRONT FENDER		1				UR FOR RW
3	3GD–2153E–00	EMBLEM, YAMAHA		2				UR FOR DPBSE
	3GD–2153E–10	EMBLEM, YAMAHA		2				UR FOR RW
4	5KM–2175B–00	TUNING FORK MARK		1				
5	5FE–21697–01	LABEL, CAUTION 2		1				
6	90267–32004	RIVET, BLIND		4				
7	90201–03313	WASHER, PLATE		4				
8	3JM–21697–10	LABEL, CAUTION 2		1				FRENCH
9	5FE–21568–01	LABEL, WARNING		1				
10	90267–32004	RIVET, BLIND		6				
11	90201–03313	WASHER, PLATE		6				
12	4WU–21568–10	LABEL, WARNING		1				FRENCH
13	4SH–2416E–00	LABEL, CAUTION CANADA		1				
14	5LP–21609–20	EMBLEM		2				UR FOR DPBSE
	5LP–21609–30	EMBLEM		2				UR FOR RW
15	5LP–2163G–10	EMBLEM 1		2				FOR DPBSE
16	5LP–2165A–10	GRAPHIC SET,REAR FENDER		1				FOR RW
17	5LP–2163H–10	EMBLEM 2		2				FOR DPBSE
18	5FE–2151H–01	LABEL 5		1				
19	90267–32004	RIVET, BLIND		4				
20	90201–03313	WASHER, PLATE		4				
21	4WU–2151H–10	LABEL 5		1				FRENCH
22	5LP–21696–00	LABEL, CAUTION		1				
23	90267–32004	RIVET, BLIND		4				

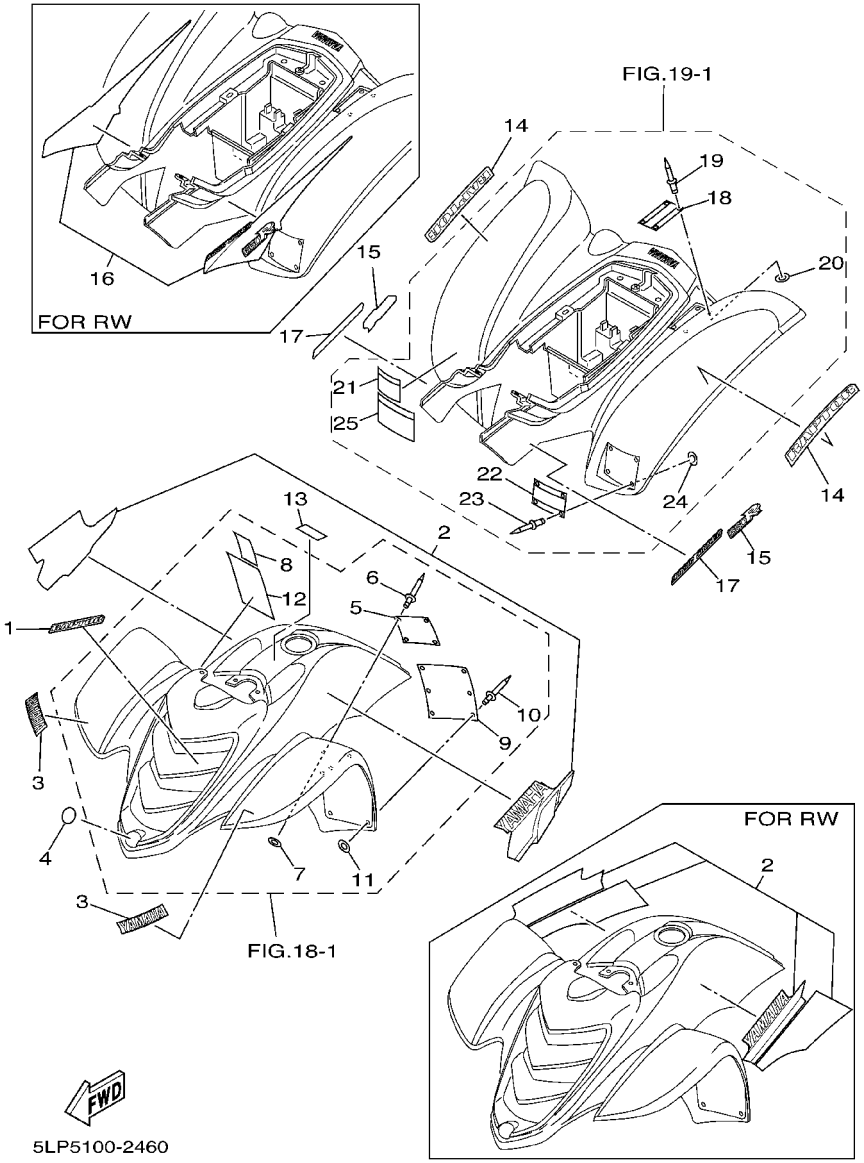

FIG. 46 EMBLEM.LABEL 2

REF. NO.	PART NO.	DESCRIPTION	USA	CAN	FRA			REMARKS
24	90201-03313	WASHER, PLATE		4				
25	5LP-21696-B0	LABEL, CAUTION		1				

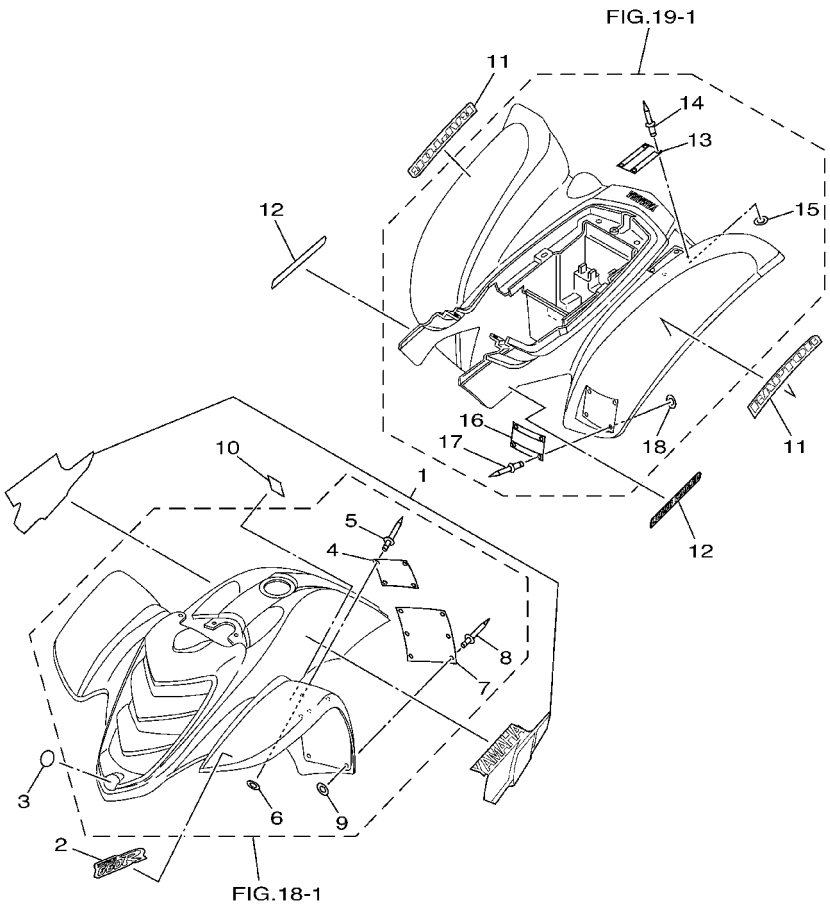

5LP5100-2470

FIG. 47 EMBLEM.LABEL 3

REF. NO.	PART NO.	DESCRIPTION	USA	CAN	FRA			REMARKS
1	5LP–21570–20	GRAPHIC SET, FRONT FENDER			1			
2	5LP–2152A–10	EMBLEM 3			1			
3	5KM–2175B–00	TUNING FORK MARK			1			
4	5FK–21697–00	LABEL, CAUTION 2			1			
5	90267–32004	RIVET, BLIND			4			
6	90201–03313	WASHER, PLATE			4			
7	5FK–21568–00	LABEL, WARNING			1			
8	90267–32004	RIVET, BLIND			6			
9	90201–03313	WASHER, PLATE			6			
10	4GB–2155A–00	MARK,EC			1			
11	5LP–21609–40	EMBLEM			2			
12	5LP–2163H–10	EMBLEM 2			2			
13	5FK–2151H–00	LABEL 5			1			
14	90267–32004	RIVET, BLIND			4			
15	90201–03313	WASHER, PLATE			4			
16	5LP–21696–M0	LABEL, CAUTION			1			
17	90267–32004	RIVET, BLIND			4			
18	90201–03313	WASHER, PLATE			4			

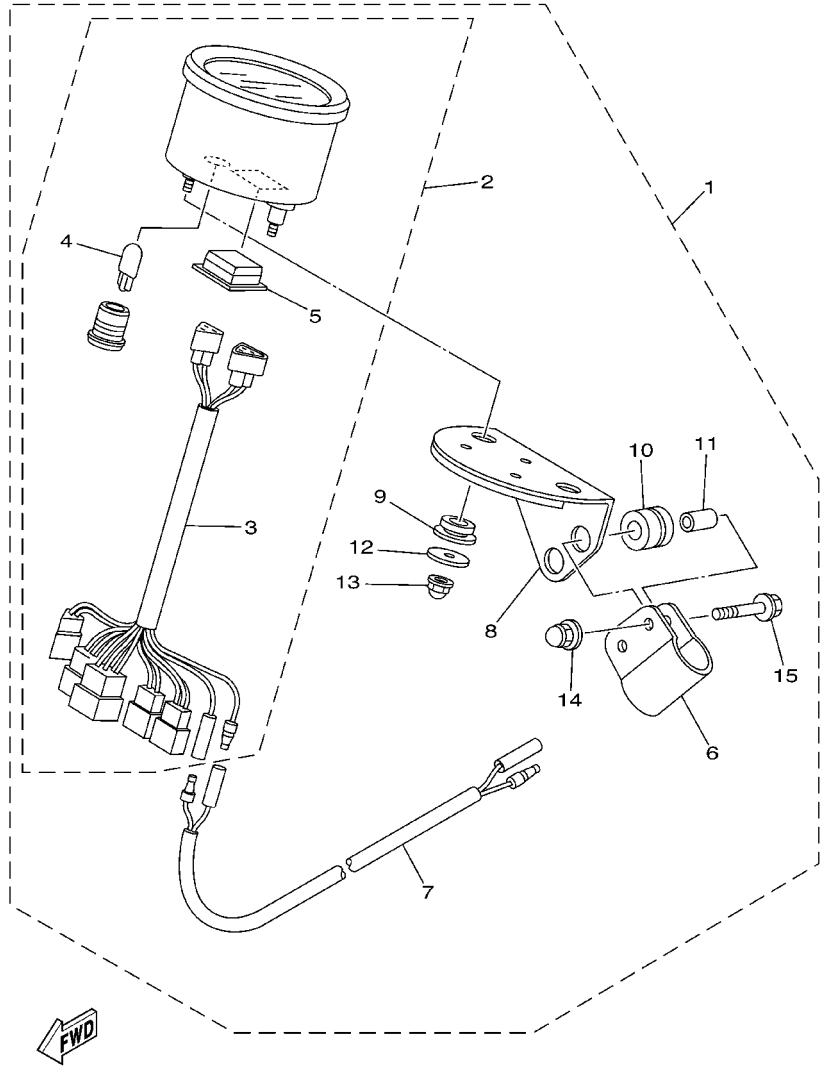

5LP1100-1470

FIG. 48 ALTERNATE (METER)

REF. NO.	PART NO.	DESCRIPTION	USA	CAN	FRA			REMARKS
1	5LP–W0081–00	SPEEDOMETER KIT		1				AP
2	5LP–83580–00	.SPEEDOMETER ASSY		1				
3	5LP–83509–00	..SOCKET CORD ASSY		1				
4	4R0–83517–00	..BULB (12V–3.4W T10)		1				
5	5EA–8352K–00	..PLUG, BLIND		1				
6	5LP–8354B–00	.BRACKET, METER		1				
7	5LP–82509–00	.WIRE, SUB LEAD		1				
8	5LP–8354C–00	.BRACKET, METER		1				
9	90480–13567	.GROMMET		2				
10	90480–14182	.GROMMET		2				
11	90387–06697	.COLLAR		2				
12	90201–052E8	.WASHER, PLATE		2				
13	90176–05054	.NUT, CROWN		2				
14	90176–06055	.NUT, CROWN		2				
15	95817–06030	.BOLT, FLANGE		2				

NUMERICAL INDEX

PART NO.	GRID NO.
5LP−W0041−00	E − 6
4BA−W0042−50	E − 8
5LP−W0045−00	D − 15
5LP−W0046−50	E − 3
3GD−W0047−00	D − 15
5LP−W0047−50	E − 3
1UY−W0048−50	D − 15
	E − 3
3GD−W0057−00	D − 15
5LP−W0057−50	E − 3
5LP−W0081−00	F − 10
5LP−W1141−00	B − 5
5LP−W215B−00	D − 2
5LP−W215C−00	D − 2
5LP−W215C−10	D − 2
5LP−W2151−00	D − 2
5LP−W2151−10	D − 2
5LP−W216B−00	D − 3
5LP−W216C−00	D − 3
5LP−W216C−10	D − 3
5LP−W2161−00	D − 3
5LP−W2161−10	D − 3
4KB−W8393−00	E − 15
5LP−11101−02	B − 2
22U−11126−00	B − 2
3YF−11133−10	B − 2
3YF−11134−10	B − 2
5LP−11166−00	C − 4
3YF−11181−00	B − 4
1L9−11186−00	B − 2
3YF−11187−00	B − 2
214−11198−01	B − 11
5LP−1131E−01	B − 2
3YF−11310−01	B − 4
5LP−1135A−00	B − 2
3YF−11351−00	B − 4
5LP−11395−00	B − 4
5LP−11400−10	B − 5
5LP−11422−10	B − 5
5LP−11454−10	B − 5
5LP−11531−00	B − 5
5LP−11536−10	B − 5
34K−11565−02	B − 5
3YF−11610−00	B − 5
3YF−11610−20	B − 5
3YF−11610−40	B − 5
3YF−11631−00−X0	B − 5
3YF−11633−01	B − 5

PART NO.	GRID NO.
3YF−11636−00	B − 5
3YF−11638−00	B − 5
5LP−11651−00	B − 5
5KM−11681−00	B − 5
3YF−12111−00	B − 7
5LP−12113−00	B − 7
5LP−12114−00	B − 7
3YF−12116−00	B − 7
3YF−12117−01	B − 7
4G0−12118−00	B − 7
5H0−12119−00	B − 7
3YF−12121−00	B − 7
3YF−12146−00	B − 7
3YF−12151−00	B − 7
2NX−12156−00	B − 7
2NX−12159−00	B − 7
3YF−12161−00	B − 7
3YF−12162−00	B − 7
3YF−12163−00	B − 7
3YF−12166−00	B − 7
5LP−12170−00	B − 8
3YF−12176−00	B − 8
3TB−12210−00	B − 8
4DW−12213−00	B − 8
34K−12215−03	B − 3
5KM−12216−00	B − 8
34K−12231−00	B − 8
3YF−12233−00	B − 8
34K−12241−00	B − 8
3YF−12247−00	B − 8
3YF−12284−00	B − 8
3YF−12288−00	B − 8
3YF−12290−00	B − 8
5LP−12405−00	B − 10
5LP−12411−00	B − 10
5LP−12413−00	B − 10
5LP−12417−00	B − 10
5LP−12420−00	B − 9
5LP−12421−00	B − 9
5LP−12422−00	B − 9
11H−12438−10	B − 9
1WG−12439−00	B − 9
3YF−12450−00	B − 9
3YF−12459−00	B − 9
5LP−12461−00	B − 10
22W−12462−00	B − 10
5LP−12467−10	D − 2
3YF−12469−00	B − 9

PART NO.	GRID NO.
5LP−12481−00	B − 10
1AA−12535−00	B − 10
5LP−12576−00	B − 9
5LP−12577−00	B − 9
5LP−12578−00	B − 10
5LP−12579−00	B − 10
583−13113−00	B − 11
51Y−13132−50	B − 12
3YF−13161−00	B − 11
5LP−13161−00	B − 11
5LP−13300−00	B − 11
3AJ−13325−00	B − 11
5LP−13329−00	B − 11
5LP−13411−00	B − 11
5LP−13412−00	B − 11
5LP−13415−00	B − 11
5LP−13416−00	B − 11
5DM−13440−00	B − 11
5LP−13464−00	B − 12
5LP−13465−10	B − 12
5LP−13487−00	C − 5
16G−13569−00	B − 13
5LP−13586−01	B − 13
5LP−13596−01	B − 13
5GH−1410A−00	C − 2
5LP−14103−00	C − 2
5LP−14105−00	B − 15
5LP−14105−10	B − 15
5LP−14107−20	C − 2
5LP−14112−00	B − 15
5DM−14141−46	B − 15
4KM−14142−22	C − 2
36Y−14147−00	B − 15
4WV−14147−10	B − 15
812−14147−00	C − 2
5DM−14148−00	B − 15
5LP−14148−00	B − 13
1UY−14155−00	B − 15
522−14161−00	C − 2
5EA−14167−00	B − 15
127−14186−00	C − 2
12R−14191−00	C − 2
24W−14193−00	C − 2
4KB−14193−20	C − 2
5LP−14197−00	B − 13
3DM−14216−00	B − 15
3LN−14216−00	B − 15
4KM−14216−00	C − 2

PART NO.	GRID NO.
1HX−14231−16	C − 2
1HX−14231−30	C − 2
3G2−14231−19	C − 2
3G2−14231−28	B − 15
3G2−14231−29	B − 15
5GH−14261−10	B − 15
4WV−14293−00	B − 15
5LP−14349−00	B − 15
5LP−14411−01	B − 13
5LP−14412−00	B − 13
31A−14419−00	B − 13
5LP−1442F−00	B − 13
5GH−14436−00	B − 13
5LP−14437−00	B − 13
5LP−14451−01	B − 13
5LP−14453−00	B − 13
5LP−14454−00	B − 13
5LP−14455−00	B − 13
59V−14457−00	B − 13
5LP−14458−01	B − 13
3XV−14462−00	B − 13
2GU−14468−00	B − 13
5DM−14561−00	C − 2
583−14561−00	C − 2
1FN−14565−00	C − 2
5LP−14611−00	C − 3
3YF−14612−00	C − 3
3YF−14613−01	C − 3
5LP−14621−00	C − 3
5LP−14628−00	C − 3
5LP−14711−10	C − 3
3YF−14714−00	C − 3
5LP−14714−00	C − 3
5LP−14728−00	C − 3
5LP−14752−00	C − 3
4BD−14766−00	C − 3
5LP−14766−00	C − 3
5LP−14787−10	C − 3
5EL−1490H−00	C − 2
5LP−1490J−00	B − 15
3EN−1490K−00	B − 15
5LP−14900−20	B − 15
5LP−14901−00	B − 15
5LP−14902−00	B − 15
5GH−14918−00	C − 2
5LP−14918−00	B − 15
4KM−14933−00	B − 15
5GH−14940−10	B − 15

PART NO.	GRID NO.
5LP−14945−00	B − 15
5DM−14985−00	C − 2
5LP−14996−00	B − 15
5LP−15100−02	C − 4
5LP−15113−00	C − 5
5LP−15381−00	B − 6
3Y1−15383−00	C − 4
5LP−15411−00	C − 5
5LP−15415−00	C − 5
5LP−15421−01	C − 5
5Y1−15427−01	B − 11
5LP−15431−00	C − 5
5LP−15441−00	C − 5
5LP−15451−00	C − 5
5LP−15455−00	C − 6
5LP−15462−00	C − 5
5LP−15484−00	C − 4
1VJ−15511−00	E − 11
1VJ−15512−00	C − 7
5LP−15515−10	C − 7
5LP−15517−10	C − 7
1VJ−15521−00	C − 7
1VJ−15522−00	C − 7
5LP−15590−00	C − 7
5LP−16111−10	C − 8
3AJ−16150−00	C − 8
2JN−16154−00	C − 8
5Y1−16321−00	C − 8
360−16325−00	C − 8
5Y1−16331−01	C − 8
3LD−16340−01	C − 8
132−16346−00	C − 12
3YF−16351−00	C − 8
4H7−16356−01	C − 8
4PT−16371−00	C − 8
3JD−16382−00	C − 8
5Y1−16383−00	C − 8
5LP−17121−10	C − 10
5LP−17141−10	C − 10
5LP−17143−10	C − 10
5LP−17151−00	C − 10
5LP−17211−10	C − 10
5LP−17221−10	C − 10
5LP−17231−10	C − 10
5LP−17241−10	C − 10
5LP−17243−10	C − 10
5LP−17251−10	C − 10
5LP−17281−10	C − 11

PART NO.	GRID NO.
5LP−17401−10	C − 10
5LP−17421−00	C − 10
5LP−17432−00	C − 11
5LP−17446−00	C − 11
5LP−17466−00	C − 5
5LP−17471−00	C − 11
5LP−18101−00	C − 12
5LP−18110−00	C − 13
5LP−18112−00	C − 13
2KW−18115−00	C − 13
5LP−18122−00	C − 12
5LP−18140−00	C − 12
2H9−18154−00	C − 13
5LP−18172−00	C − 12
3XJ−18173−00	C − 12
4NX−18175−00	C − 12
3XJ−18178−00	C − 12
3XJ−18182−00	C − 12
3XJ−18184−00	C − 12
4EW−18185−00	C − 12
5LP−18337−00	C − 13
5LP−18380−00	C − 12
5LP−18431−00	C − 13
5LP−18511−00	C − 12
5LP−18512−10	C − 12
5LP−18513−00	C − 12
3GX−18531−00	C − 12
4TR−18535−00	C − 12
5LP−18541−00	C − 12
5LP−21101−29	C − 14
5LP−21101−39	C − 14
5LP−21190−29	C − 14
5LP−21190−39	C − 14
5LP−21244−00	C − 14
5LP−21314−00	C − 14
5LP−21315−10	C − 14
5LP−21316−00	C − 14
5LP−21317−00	C − 14
5LP−21318−00	C − 14
5LP−21471−00	C − 14
4WU−2151H−10	F − 7
5FE−2151H−01	F − 6
	F − 7
5FK−2151H−00	F − 9
5LP−21513−00	D − 2
5LP−21514−00	D − 2
5LP−2152A−10	F − 9
3GD−2153E−00	F − 6

NUMERICAL INDEX

PART NO.	GRID NO.
3GD−2153E−00	F − 7
3GD−2153E−10	F − 6
	F − 7
4GB−2155A−00	F − 9
5LP−21556−A0	D − 2
5LP−21556−00	D − 2
5LP−21565−00	F − 6
	F − 7
5LP−21565−20	F − 6
	F − 7
4WU−21568−10	F − 7
5FE−21568−01	F − 6
	F − 7
5FK−21568−00	F − 9
5LP−21570−20	F − 6
	F − 7
	F − 9
5LP−21570−30	F − 6
	F − 7
5LP−21609−20	F − 6
	F − 7
5LP−21609−30	F − 6
	F − 7
5LP−21609−40	F − 9
5LP−21613−10	D − 3
5LP−21621−00	D − 3
5LP−2163A−00	D − 3
5LP−2163E−00	D − 3
5LP−2163G−10	F − 6
	F − 7
5LP−2163H−10	F − 6
	F − 7
	F − 9
5LP−21639−00	D − 3
5LP−2165A−10	F − 6
	F − 7
5LP−21688−00	D − 3
5LP−21691−00	D − 3
5LP−21696−B0	F − 8
5LP−21696−M0	F − 9
5LP−21696−00	F − 6
	F − 7
3JM−21697−10	F − 7
5FE−21697−01	F − 6
	F − 7
5FK−21697−00	F − 9
5LP−2171A−00	D − 2
5LP−2171A−10	D − 2

PART NO.	GRID NO.
41R−21717−00	C − 14
3SP−21732−00	D − 11
5KM−2175B−00	F − 6
	F − 7
	F − 9
5LP−2175T−00	D − 4
5LP−21750−00	D − 4
5LP−21761−01	D − 4
5LP−2179T−10	B − 14
3LD−21871−00	D − 4
10V−21875−00	D − 4
5LP−22110−10	D − 5
5LP−22123−00	D − 5
23X−22129−00	D − 6
4X7−22129−00	D − 5
5LP−22141−00	D − 5
3YF−22149−00	D − 5
5LP−22151−10	D − 5
5LP−22153−10	D − 7
5LP−2217A−10	D − 6
5LP−2217F−10	D − 6
5LP−22178−00	C − 14
5LP−22184−00	D − 5
5LP−2219X−00	D − 6
5LP−22210−30	D − 8
5LP−22210−40	D − 8
5LP−22210−50	D − 8
5LP−22210−60	D − 8
5LP−22210−70	D − 8
5LP−23350−00	D − 10
5LP−23350−10	D − 10
5LP−23501−00	D − 10
5LP−23502−00	D − 11
1UY−23517−00	D − 10
5LP−23540−10	D − 10
5LP−23550−10	D − 10
5LP−23570−00	D − 10
5LP−23579−00	D − 10
5LP−23580−00	D − 10
1UY−23812−00	D − 9
5LP−23813−10	D − 9
8K1−23814−00	D − 9
5LP−23816−00	D − 9
5LP−23831−00	D − 9
1UY−23841−01	D − 9
1UY−23845−01	D − 9
5LP−23858−00	D − 9
1UY−23868−01	D − 9

PART NO.	GRID NO.
5GT−23872−00	C − 15
5LP−23881−00	D − 9
1UY−23894−01	D − 9
5LP−24110−00	D − 12
4EW−2412F−00	D − 12
5LP−24135−00	D − 12
5LP−24135−10	D − 4
5LP−2414H−01	D − 12
5LP−2414J−00	D − 12
4SH−2416E−00	F − 7
5LP−24500−00	D − 12
4X8−24512−00	D − 12
3AJ−24523−00	D − 12
3AJ−24534−00	D − 12
5KM−24610−00	D − 12
5LP−2470F−00	D − 13
5LP−24710−00	D − 13
214−24724−00	D − 13
5LP−24725−00	D − 13
5LP−24729−00	D − 13
22W−24741−00	D − 13
5LP−24776−00	D − 13
5LP−25111−00	D − 14
5LP−25117−00	D − 14
3GD−25127−10	D − 14
5LP−2514A−10	D − 15
5LP−25180−10	D − 14
5LP−25311−10	D − 5
5LP−25345−00	D − 7
5LP−25381−10	E − 2
5LP−25383−00	E − 2
5LP−25386−00	E − 2
5LP−25390−10	E − 2
2XJ−25412−00	E − 2
2XJ−25440−20	E − 2
5LP−25712−10	E − 3
5LP−25721−10	D − 5
4PT−2580E−00	E − 8
5LP−2580T−00	D − 15
5LP−2580U−00	D − 15
5LP−2580W−00	E − 3
2YK−2582A−00	E − 8
3GD−2582T−00	D − 15
5FK−2582W−00	E − 3
3GD−25827−00	D − 15
3GD−25828−00	D − 15
5LP−2583T−01	E − 6
5MV−25833−00	E − 6

PART NO.	GRID NO.
5LP−25844−00	E − 8
4PX−25852−00	E − 8
5LP−25852−01	E − 6
2VN−25854−00	E − 8
4L0−25854−00	E − 6
2VN−25855−00	E − 8
2GU−25866−00	E − 6
2VN−25866−00	E − 8
5LP−25867−00	E − 6
5LP−25871−00	E − 6
5LP−25872−00	E − 6
5LP−25873−00	E − 6
5LP−25874−00	E − 8
5LP−25875−00	D − 11
5LP−25876−00	D − 11
5LP−25886−00	D − 7
5EB−25887−00	D − 7
5MV−2589F−00	E − 6
4NK−2589H−00	E − 6
2VN−25894−00	E − 8
5LP−25895−00	E − 8
1UY−25917−51	E − 3
1UY−25924−51	E − 3
3GD−25933−00	D − 15
1UY−25972−51	E − 3
1UY−25977−51	E − 3
5LP−26111−00	E − 4
5LP−26124−00	E − 4
5LP−26124−10	E − 4
1NV−26129−00	E − 4
5LP−26150−10	E − 4
5LP−26241−00	E − 4
1NV−2625G−01	E − 4
4KB−26250−00	E − 4
1UY−26259−00	E − 6
4KB−2628F−00	E − 4
4KB−2628G−00	E − 4
1NV−26304−00	E − 4
5LP−26311−00	E − 4
5LP−26331−10	E − 5
5LP−26335−10	E − 4
5LP−26341−00	E − 4
1UY−2637A−01	E − 4
5LP−2637E−10	E − 4
5LP−26393−00	E − 11
1NV−26398−00	E − 4
371−27114−00	D − 13
5LP−27114−00	D − 3

PART NO.	GRID NO.
5LP−27211−10	E − 7
2YK−27222−00	E − 8
3KW−27234−00	E − 8
5LP−27411−00	E − 7
5LP−27421−00	E − 7
5LP−27445−00	E − 7
5LP−27446−00	E − 7
5LP−27453−00	E − 7
4WV−28100−00	C − 15
1NV−2811A−01	C − 15
5LP−2819R−00	F − 6
5GT−2836B−10	E − 4
5LP−2845N−00	E − 9
5LP−2845N−10	E − 9
5LP−2845R−00	E − 9
5LP−2845R−10	E − 9
5LP−81410−01	E − 10
5LP−81450−00	E − 10
3AJ−81801−00	E − 11
3AJ−81809−00	E − 11
3XF−81815−00	E − 11
4XV−8182A−00	E − 11
11H−81844−00	E − 11
1FK−81847−00	E − 11
3AJ−81850−00	E − 11
4G0−81871−00	E − 11
3SX−81890−00	E − 11
4XE−81940−00	F − 3
5GT−81960−00	F − 3
3WP−81980−00	F − 4
3XW−82100−01	F − 3
5LP−82115−00	F − 3
5LP−82116−00	F − 3
371−82121−00	F − 3
5LP−82122−00	F − 3
5LP−82128−00	F − 3
5LP−82129−00	F − 4
2GH−82151−00	F − 3
5LP−82176−00	F − 4
5GT−82180−00	F − 4
4KJ−82310−10	F − 3
3YF−82370−00	F − 3
5LP−82509−00	F − 10
5LP−82510−00	F − 4
5LP−82530−00	F − 4
4GY−82540−10	F − 3
5LP−82540−00	F − 3
5LP−82541−00	F − 3

PART NO.	GRID NO.
5GH−82560−00	F − 3
5GT−82560−00	F − 4
5LP−82560−00	F − 3
3HN−82579−00	F − 4
5LP−82590−10	F − 4
5LP−82910−10	E − 15
5LP−82911−10	E − 15
4V4−82913−00	E − 4
5LP−82913−10	E − 15
1UY−82917−00	E − 15
4KB−82917−00	E − 15
5LP−83509−00	F − 10
5GH−83516−00	F − 4
4R0−83517−00	F − 10
5EA−8352K−00	F − 10
5LP−83530−00	F − 4
5LP−8354B−00	F − 10
5LP−8354C−00	F − 10
5LP−83580−00	F − 10
5LP−83755−00	F − 3
1UY−83909−00	F − 2
5LP−83909−10	E − 15
5LP−83912−00	E − 15
1UY−83913−00	E − 15
5LP−83922−00	E − 6
5LP−83922−10	E − 15
5LP−83925−10	E − 15
1UY−83935−10	E − 15
3TB−83936−00	F − 4
437−83936−01	D − 12
	E − 4
	F − 2
	F − 4
5GH−83941−00	F − 2
3L4−83943−00	F − 2
2H7−83945−00	E − 15
5LP−83945−10	E − 15
1UY−83956−00	E − 15
5LP−8396X−10	E − 15
1UY−83962−00	E − 15
1UY−83966−00	E − 15
1UY−83967−10	E − 15
5LP−83973−01	E − 15
5LP−8398X−10	E − 15
5LP−83980−00	E − 6
5LP−83991−10	E − 15
5LP−8411G−00	E − 12
5LP−8411G−10	E − 12

NUMERICAL INDEX

PART NO.	GRID NO.
5LP−84111−00	E − 12
5LP−84111−10	E − 12
5LP−84126−10	E − 15
5LP−84127−10	E − 15
5LP−84310−01	E − 12
5LP−84310−11	E − 12
4KB−84314−00	E − 12
5LP−8433E−00	E − 12
5LP−84331−00	E − 12
5LP−84334−00	E − 12
5LP−84340−00	E − 12
5LP−84344−00	E − 12
5LP−84344−10	E − 12
5LP−84526−00	E − 12
5LP−84700−10	E − 13
	E − 14
5LP−84702−30	E − 13
	E − 14
5LP−84702−40	E − 14
256−84714−60	E − 13
	E − 14
4TR−84723−00	E − 13
	E − 14
4TR−84733−00	E − 13
	E − 14
5LP−84751−00	E − 14
2EK−85111−00	F − 5
3Y6−85130−02	F − 5
449−85131−02	F − 5
5LP−85540−20	F − 3
90101−06664	C − 12
90101−12012	D − 8
90103−08026	D − 5
90105−06032	C − 5
90105−06690	E − 8
90105−07342	B − 8
90105−082A0	C − 3
90105−08440	E − 3
90105−08520	D − 15
90105−08659	E − 3
90105−09647	B − 2
90105−09648	B − 4
90105−10034	D − 10
90105−10388	D − 10
90105−10407	D − 10
90105−10649	B − 4
90105−10650	B − 4
90109−06036	E − 7
90109−063E8	B − 7
90109−063E9	B − 2
90109−063F1	D − 6
90109−06418	C − 8
90109−066G1	C − 14
	D − 15
90109−06723	F − 3
90109−081F0	E − 3
90109−10008	D − 6
90109−10009	D − 8
90109−10654	D − 6
90109−12002	D − 5
90109−12003	D − 6
90110−05201	D − 2
90110−06093	B − 3
90110−06124	F − 3
90110−06134	C − 3
90113−05053	E − 3
90114−10007	D − 14
90114−10009	E − 2
90116−06541	B − 2
90116−08507	E − 2
90119−06056	D − 2
	D − 3
	D − 4
90119−06073	D − 12
90119−06118	D − 2
	D − 3
	D − 4
90123−08046	E − 15
90149−04278	E − 4
90149−06011	D − 12
90149−06306	D − 2
	D − 3
90149−08268	D − 15
90154−05011	D − 2
90154−05013	D − 3
90154−06014	D − 12
90159−06078	C − 12
90159−06092	C − 8
90170−06128	B − 7
90170−06228	C − 13
90170−08258	E − 2
90170−10186	D − 9
90170−18003	B − 6
90170−20274	C − 8
90170−20327	C − 8
90170−33008	E − 3
90170−33009	E − 3
90171−10046	D − 9
	D − 11
90171−14020	D − 15
90171−14037	E − 2
90176−05054	F − 10
90176−06055	F − 10
90179−06668	C − 3
90179−08148	E − 15
90179−12588	D − 5
90179−14317	B − 5
90179−18020	C − 11
90183−05008	D − 2
90185−10060	D − 6
	D − 8
	D − 10
90185−10120	D − 10
90185−12134	D − 6
	D − 8
90185−14150	D − 9
90185−16127	D − 5
90201−03313	F − 6
	F − 7
	F − 8
	F − 9
90201−04325	D − 7
90201−052E8	F − 10
90201−05725	D − 2
90201−060L5	D − 12
90201−06074	E − 13
	E − 14
90201−06380	D − 3
90201−06557	E − 12
90201−08013	E − 3
90201−08083	E − 8
90201−083P5	D − 5
90201−08326	C − 3
90201−086P8	C − 14
90201−096J9	B − 4
90201−100U1	D − 6
90201−101A4	B − 4
90201−101J1	D − 6
90201−10118	E − 6
	E − 8
90201−10119	C − 8
90201−10430	D − 10
90201−10591	C − 14
90201−10774	D − 8
90201−11723	D − 4
90201−12016	D − 6
	D − 8
90201−122H1	D − 5
	D − 6
90201−124G9	D − 6
	D − 8
90201−12474	C − 12
90201−12575	C − 13
90201−14226	B − 5
	D − 9
	E − 2
90201−14586	D − 15
90201−150U6	C − 8
	C − 11
90201−15785	C − 8
90201−15797	C − 13
	E − 7
90201−160F6	D − 5
90201−20276	C − 10
	C − 11
90201−204R5	D − 15
90201−286K9	C − 7
90201−301F4	B − 5
90202−05193	D − 12
90206−12075	B − 7
90206−20037	C − 11
90209−10229	D − 9
	D − 11
90209−21332	C − 10
90209−25342	C − 10
90209−25349	C − 10
90209−25350	C − 10
90215−18001	B − 6
90215−20197	C − 8
90215−20231	C − 8
90215−21256	C − 11
90240−08124	E − 8
90267−32004	F − 6
	F − 7
	F − 9
90267−47187	D − 7
90267−47200	D − 7
90267−48120	F − 4
90269−06002	D − 2
90280−16053	B − 5
90282−05058	B − 6
90282−07042	C − 8
90336−28053	D − 9
90338−18122	C − 15
90340−14120	B − 2
90340−14128	C − 5
90340−14132	B − 11
90340−18101	B − 2
90340−36121	C − 5
90380−22111	D − 5
90381−15088	D − 10
90383−20032	D − 6
90383−20033	D − 6
90387−06500	D − 6
90387−06595	E − 12
90387−066J1	D − 12
90387−06697	F − 10
90387−067N5	D − 4
90387−07391	E − 13
	E − 14
90387−075H4	E − 13
	E − 14
90387−075U2	B − 10
	E − 13
	E − 14
90387−07598	D − 12
90387−07789	B − 14
90387−08009	C − 14
90387−081R2	D − 11
90387−083J6	D − 7
90387−090R0	D − 9
90387−10002	D − 10
90387−101R3	D − 10
90387−12010	D − 6
90387−12015	D − 8
90387−125K2	D − 6
90387−125N9	D − 6
90387−127G8	D − 8
90387−150R1	D − 15
90387−16006	D − 5
90387−17783	C − 4
90387−20005	D − 15
90387−2505V	C − 10
90387−2813C	C − 10
90387−2813D	C − 10
90401−06001	B − 3
90401−08133	B − 11
90401−10096	B − 11
90401−10159	E − 6
	E − 8
90401−20145	B − 11
90430−06014	B − 9
	C − 8
90430−06192	B − 3
90430−08204	B − 11
90430−10148	F − 3
90430−10188	B − 11
90430−14043	B − 12
90445−083J4	D − 12
90445−090F7	D − 4
90445−09300	D − 4
90445−110F2	D − 12
90445−11289	D − 4
90450−22017	B − 12
90450−32015	B − 9
	B − 10
90450−35001	B − 10
90450−47001	B − 13
90450−57044	B − 13
90460−68230	B − 13
90464−07209	F − 4
90464−13073	F − 4
90464−13077	F − 2
	F − 4
90464−15065	F − 4
90464−15195	F − 4
90464−16061	F − 4
90464−20181	D − 3
	F − 4
90465−08122	C − 5
90465−08125	C − 4
90465−13M11	F − 4
90467−06194	C − 2
90467−08003	D − 4
90467−10008	D − 4
90467−10039	B − 13
90467−11044	E − 8
90467−11106	D − 12
90467−14015	C − 4
90467−14057	E − 8
90467−22080	B − 13
90468−16191	D − 9
90480−01400	D − 12
90480−05201	D − 2
90480−12421	D − 4
90480−13567	F − 10
90480−14102	E − 12
90480−14182	F − 10

NUMERICAL INDEX

PART NO.	GRID NO.
90480−14555	E − 13
	E − 14
90480−15470	B − 10
90480−15528	E − 13
	E − 14
90480−18001	B − 14
90480−18290	D − 12
90480−18499	B − 10
90480−24001	D − 4
90501−043E0	B − 11
90501−05001	B − 8
90501−052G5	C − 12
90501−08430	C − 2
90501−20003	B − 5
90501−23142	C − 8
90506−14005	C − 12
90506−20380	E − 7
90508−20016	C − 8
90508−23567	D − 13
90508−35007	C − 12
90560−35263	D − 5
91A20−07004	C − 2
91317−05012	E − 10
91317−05025	E − 10
91317−06012	B − 10
	B − 11
91317−06014	B − 4
	C − 7
91317−06016	B − 12
91317−06018	B − 2
91317−06020	B − 9
	B − 13
91317−06025	B − 2
	B − 8
	C − 5
91317−06035	B − 11
91317−06040	B − 2
	B − 4
91317−06045	B − 9
91317−06050	B − 2
91317−06055	B − 2
91317−06115	B − 2
91317−06130	B − 2
91401−16012	E − 8
91401−20020	D − 9
	D − 11
91401−30025	D − 15
91401−30030	E − 2

PART NO.	GRID NO.
91690−40022	E − 15
92014−06012	C − 3
92017−06010	C − 3
92017−08016	E − 7
92017−10030	C − 14
92907−04100	C − 2
92907−05100	E − 4
	F − 2
	F − 5
92907−05200	F − 5
92907−05600	E − 5
92907−06200	C − 3
92907−06600	B − 2
	B − 8
	B − 10
	F − 3
92907−10200	D − 14
	E − 2
92990−06200	C − 3
93101−12173	B − 9
93101−14092	C − 5
93102−12106	C − 12
	C − 13
93102−15212	C − 8
93102−22216	D − 14
93102−25064	B − 6
93102−25081	C − 15
93102−25099	C − 15
93102−35393	C − 10
93102−42260	D − 5
93102−43341	D − 5
93104−09025	E − 4
93105−26026	D − 14
93106−22019	D − 5
93109−20076	D − 6
93109−28043	D − 5
93112−31011	D − 9
93210−07135	C − 4
93210−08521	B − 7
93210−13361	B − 11
	C − 5
93210−13657	B − 2
93210−14369	C − 5
93210−15171	B − 12
93210−15414	C − 13
93210−15620	E − 8
93210−16629	B − 12
93210−18417	B − 10

PART NO.	GRID NO.
93210−19522	B − 3
93210−21190	D − 4
93210−22298	C − 10
93210−30611	B − 13
93210−32172	B − 2
93210−33786	B − 9
93210−357A3	C − 5
93210−44545	B − 13
93210−49046	B − 10
93210−71360	B − 2
93210−77363	B − 9
93211−01467	B − 4
93300−60804	C − 14
93306−00106	B − 9
93306−00406	D − 14
93306−00426	C − 11
93306−00428	C − 10
93306−00438	D − 14
93306−00705	D − 5
93306−20006	C − 7
93306−20227	D − 14
93306−20331	C − 15
93306−30534	B − 5
93306−30535	C − 10
93306−30540	C − 10
93306−30702	B − 5
93306−90501	C − 12
93310−212R6	C − 7
93310−637D3	B − 5
93311−62574	B − 5
93315−10838	C − 9
93315−31502	C − 9
93317−22237	D − 5
93340−21505	C − 8
93342−22217	D − 5
93430−12008	C − 13
	E − 7
93440−10085	B − 2
93440−11024	E − 11
93440−15012	C − 11
93440−25084	C − 10
93440−28062	C − 10
93450−24028	B − 5
93503−08007	B − 11
93603−16219	B − 9
93603−21180	B − 8
93605−10090	B − 5
93608−33046	C − 12

PART NO.	GRID NO.
93612−16254	B − 4
93700−06004	D − 6
	D − 10
9383E−13216	C − 11
93900−00022	E − 2
93900−00030	D − 14
94107−10009	D − 14
94110−09008	E − 2
94582−02092	E − 2
94591−45126	B − 8
94701−00241	B − 2
95027−06008	C − 3
	F − 4
95027−06012	B − 9
95027−06014	B − 6
	C − 5
95027−06016	D − 11
95027−06020	B − 10
	D − 7
95027−06025	B − 10
	C − 5
	C − 6
95027−06030	C − 4
	C − 5
95027−06035	C − 5
	C − 6
95027−06045	C − 4
95027−06050	C − 5
95027−06060	C − 4
95027−06065	C − 4
95027−06080	C − 4
95027−08025	C − 3
95027−08030	E − 8
95302−08600	E − 8
95304−06700	C − 13
95307−05600	F − 5
95307−05700	E − 4
95307−06600	E − 13
	E − 14
95307−08600	D − 5
95307−10700	D − 9
95604−06100	E − 6
95607−05100	D − 2
	E − 4
95607−06200	D − 2
	D − 3
95607−08200	C − 15
	E − 7

PART NO.	GRID NO.
95607−08200	E − 8
95607−10200	C − 14
95707−06500	F − 3
95707−10500	D − 14
	E − 2
95807−06012	F − 3
95807−06020	D − 6
95807−06025	B − 10
	E − 12
95807−06030	E − 13
	E − 14
95807−08014	D − 2
95807−10016	D − 4
95817−06012	C − 13
95817−06030	E − 11
	F − 10
95817−08014	C − 14
	E − 9
95817−08020	E − 9
95817−08035	C − 3
95817−08050	C − 15
95817−10020	C − 14
95817−10025	E − 7
95817−10080	C − 14
95817−10100	C − 14
95827−06020	B − 14
95827−06025	E − 6
95827−06030	D − 12
95827−08012	E − 7
95827−08035	D − 9
97007−06020	F − 3
97007−08020	D − 7
97017−06010	B − 10
97027−06014	C − 11
97027−06016	B − 8
97027−06020	C − 13
97027−08060	D − 9
97702−40620	E − 13
	E − 14
98507−03008	D − 12
98507−04006	B − 15
98507−04008	C − 2
98507−04014	C − 2
98507−05018	E − 5
98507−05020	E − 4
98507−05030	F − 2
98507−06016	B − 11
98517−05012	F − 2

PART NO.	GRID NO.
98580−04010	C − 2
98707−06012	C − 4
98707−06025	D − 12
98907−06016	F − 3
99001−10600	C − 13
99009−10400	C − 9
99009−11400	B − 11
99009−12400	B − 9
99009−20400	C − 11
99009−30400	D − 10
99530−08016	C − 4
	C − 6
99530−10116	B − 2
99530−12016	C − 4
	C − 5
99530−14016	C − 4