YAMAHA

PARTS CATALOGUE

YFM35XY (3D58) U.S.A.

1H3D5-110E1

( )

YAMAHA GENUINE Parts & Accessories

YFM35XY
PARTS CATALOGUE
©2008 by Yamaha Motor Co., Ltd.
1st edition, June 2008
All rights reserved.
Any reprinting or unauthorized use
without the written permission of
Yamaha Motor Co., Ltd.
is expressly prohibited.
Printed in Japan.

FOREWORD

This Parts Catalogue is related to the parts for the model(s) on the cover page. When you are ordering replacement parts, please refer to this Parts Catalogue and quote both part numbers and part names correctly.

1. Modifications or additions which have been made after the issue of the Parts Catalogue will be announced in the Parts News.
   It is advisable that you make the necessary corrections to the Parts Catalogue according to the Parts News.

2. Abbreviations
   The following abbreviations are used in this Parts Catalogue.

   “UR” Use specified parts number.
   “UN” Use as many as needed.
   “AP” Alternate Parts
   “LM” Locally Made (Parts need to be ordered locally)
   “F#” Frame No. (Applicable machine No.)
   “O/S” Over Size

3. The number of components for assembly
   - Parts, which are to be supplied in an assembly, are listed with a dot (.) in front of the part name as shown below.
   - The numeral appearing to the right of each component part indicates the quantity of parts for each assembly unit.

PART NO.	DESCRIPTION	Q’TY	REMARKS
2F5–83310–60	FRONT FLASHER LIGHT ASSY	2	
115–83311–60	.BULB (6V–18W)	1	

4. Applicable colours of graphics are represented in the “REMARKS” as shown below.

PART NO.	DESCRIPTION	Q’TY	REMARKS
2N4–24110–00–X5	FUEL TANK COMP.	2	MXR
3J1–24240–10	.GRAPHIC, FUEL TANK	1	FOR MXR

5. Note that the illustrations for reference in finding parts numbers are not to be used for assembling. When assembling, please use the applicable service manual.

6. The asterisk (*) before a reference number indicates modified items after the first edition.

7. Applicable Serial No.

Engine Serial No.

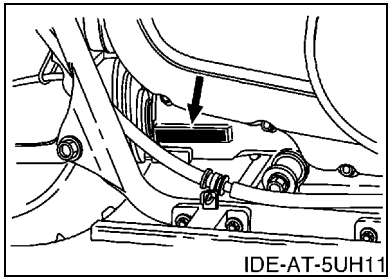

Frame Serial No.

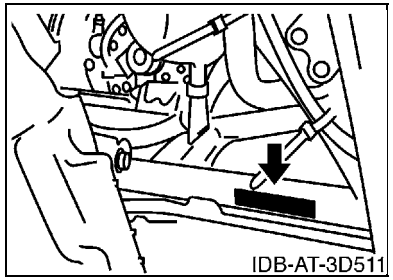

8. Applicable Colour Code (The (*) mark shows Model colour.)

Abbreviation	Colour Name	Colour Code
DPBSE(*)	DEEP PURPLISH BLUE SOLID E	0583

9. Quantity Column Information

Column No.	Name Of Q’ty Column	Destination
1	USA	U.S.A.

MODEL LABEL

(1) A label called “Model Label” is affixed in the location as indicated in (3) below. When using this parts catalogue, please be sure to cross–reference the “model code – production code No.” in the catalogue with the “model code – production code No.” indicated on the Model Label affixed onto the product concerned.

(2) “Model Label” Indication

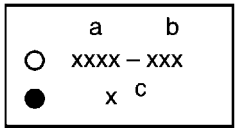

a: Model Type Code
b: Production Code No.
c: Colouring Type

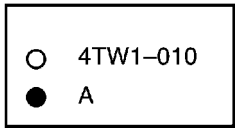

(3) Model Label Affixing Location

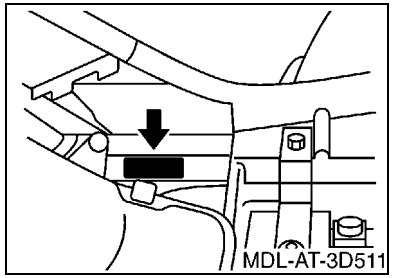

(4) Colouring Information

Model Code	Colouring Type Code	Colour Code	Colour Name	Abbreviation
3D58	D	0583	DEEP PURPLISH BLUE SOLID E	DPBSE

(5) Model Code – Production Code Number of Model Listed in This Parts Catalogue

Model Code	Production Code No.	Country (destination)	Model Code	Production Code No.	Country (destination)
3D58	010	U.S.A.			

CONTENTS

ENGINE

CYLINDER HEAD 1
CYLINDER 3
CRANKSHAFT & PISTON 4
VALVE 6
CAMSHAFT & CHAIN 7
OIL PUMP 8
INTAKE 9
CARBURETOR 10
EXHAUST 12
CRANKCASE 14
CRANKCASE COVER 1 15
STARTER CLUTCH 17
CLUTCH 18
TRANSMISSION 20
MIDDLE DRIVE GEAR 21
SHIFT SHAFT 23

CHASSIS

FRAME 24
FRONT FENDER 26
REAR FENDER 27
SIDE COVER 28
REAR ARM 29
DRIVE SHAFT 30
REAR SUSPENSION 33
FRONT SUSPENSION & WHEEL 34
STEERING 35
FUEL TANK 36
SEAT 37
FRONT WHEEL 38
FRONT BRAKE CALIPER 40
REAR WHEEL 41
STEERING HANDLE & CABLE 43
FRONT MASTER CYLINDER 44
STAND & FOOTREST 45
GUARD 47
GENERATOR 48
STARTING MOTOR 49
HEADLIGHT 50
TAILLIGHT 51
HANDLE SWITCH & LEVER 52
ELECTRICAL 1 53
GRAPHICS 56
EMBLEM & LABEL 1 57

INDEX

NUMERICAL INDEX 58

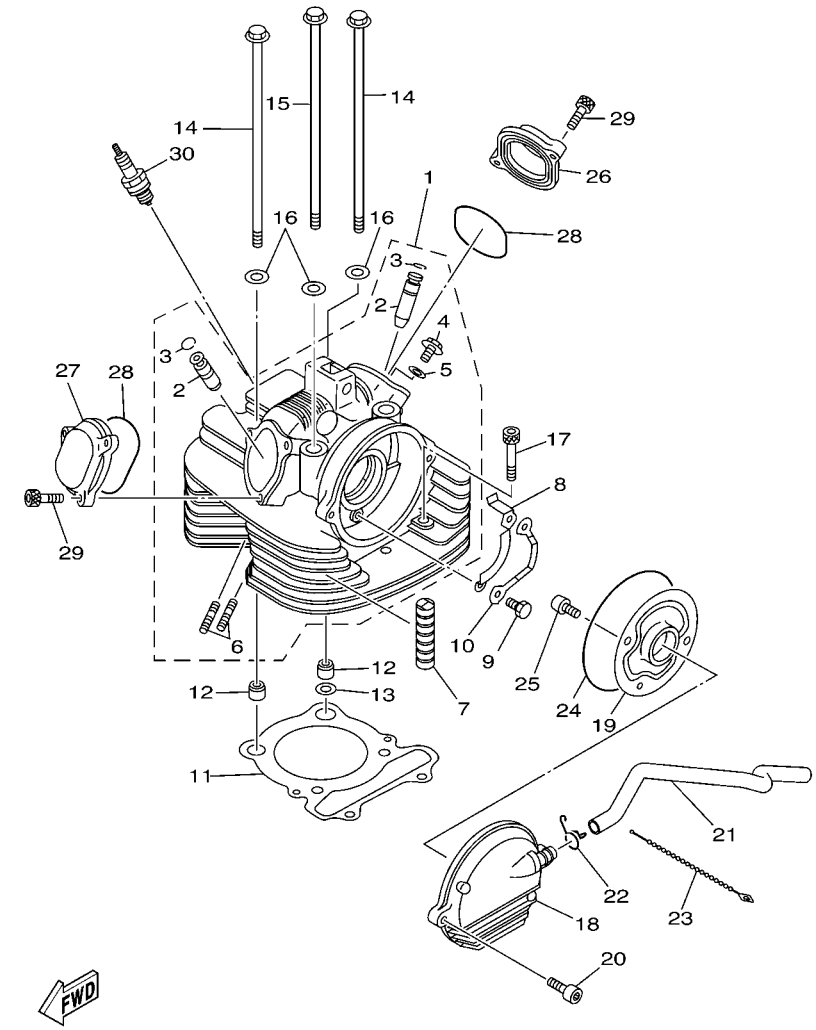

3D51110-E010

FIG. 1 CYLINDER HEAD

REF. NO.	PART NO.	DESCRIPTION	USA					REMARKS
1	5YT–11101–20	CYLINDER HEAD ASSY	1					
2	3Y1–11133–11	.GUIDE, VALVE 1	2					
3	93440–12052	.CIRCLIP	2					
4	95022–06014	.BOLT, FLANGE	1					
5	90430–06192	.GASKET	1					
6	90116–06041	.BOLT, STUD	2					
7	3Y1–11127–00	ABSORBER 3	2					
8	3Y1–1111F–00	PLATE	1					
9	97002–06012	BOLT	2					
10	90215–06162	WASHER, LOCK	1					
11	1UY–11181–01	GASKET, CYLINDER HEAD 1	1					
12	99530–14016	PIN, DOWEL	2					
13	90430–14240	GASKET	1					
14	90105–10137	BOLT, FLANGE	2					
15	90105–10136	BOLT, FLANGE	2					
16	90201–10128	WASHER, PLATE	4					
17	91312–08050	BOLT	2					
18	4WU–11160–01	BREATHER ASSY	1					
19	4KB–11165–00	PLATE, BREATHER	1					
20	95022–06012	BOLT, FLANGE	2					
21	3C2–E1166–00	PIPE, BREATHER 1	1					
22	90467–140A4	CLIP	1					
23	90464–39800	CLAMP	1					
24	93211–06635	O-RING	1					
25	91312–06025	BOLT	2					
26	2NL–11186–12	COVER, CYLINDER HEAD SIDE 2	1					
27	2NL–11187–11	COVER, CYLINDER HEAD SIDE 3	1					

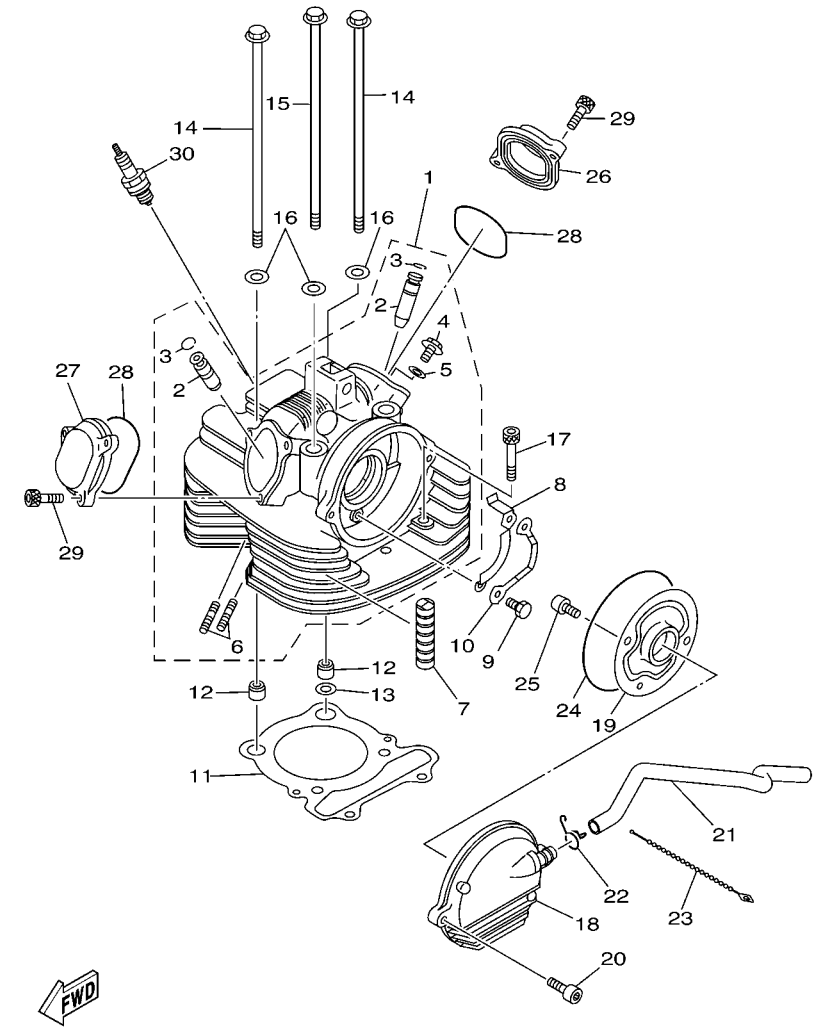

3D51110-E010

FIG. 1 CYLINDER HEAD

REF. NO.	PART NO.	DESCRIPTION	USA					REMARKS
28	93210–57634	O-RING	2					
29	91312–06020	BOLT	5					
30	94701–00333	PLUG, SPARK (NGK DR8EA)	1					

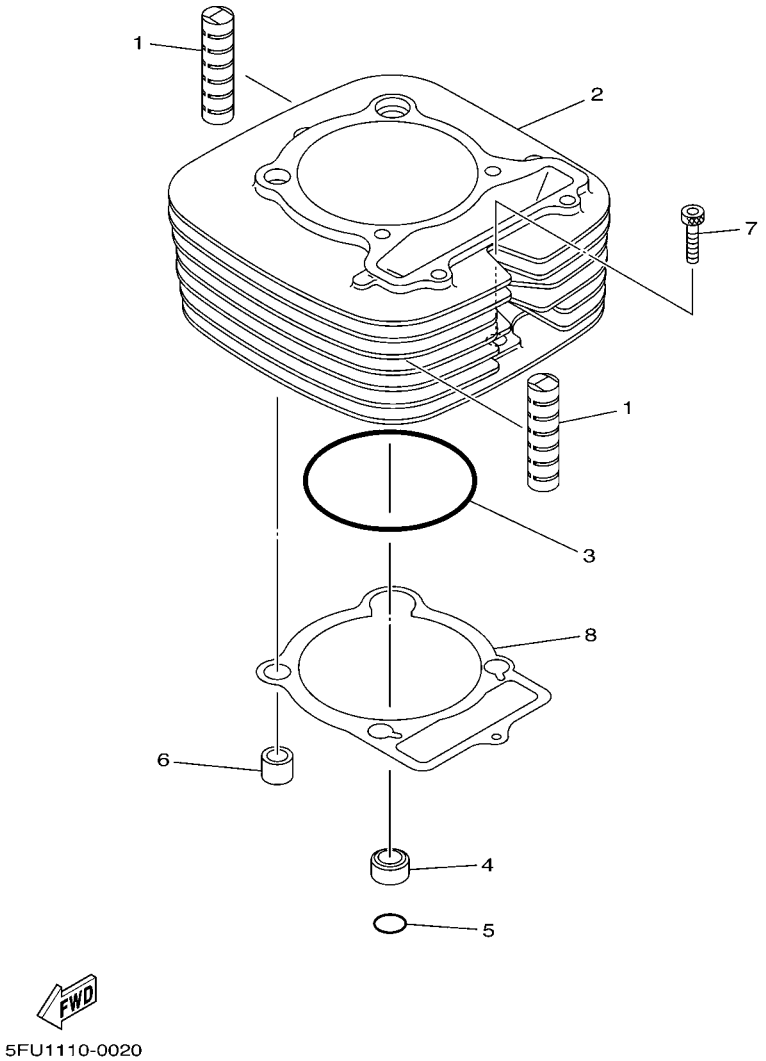

FIG. 2 CYLINDER

REF. NO.	PART NO.	DESCRIPTION	USA					REMARKS
1	4X7–11127–00	ABSORBER 3	2					
2	5YT–11310–00	CYLINDER	1					
3	93210–86509	O-RING	1					
4	90387–16547	COLLAR	1					
5	93210–18322	O-RING	1					
6	99530–14016	PIN, DOWEL	1					
7	91312–06030	BOLT	1					
8	4KB–11351–00	GASKET, CYLINDER	1					

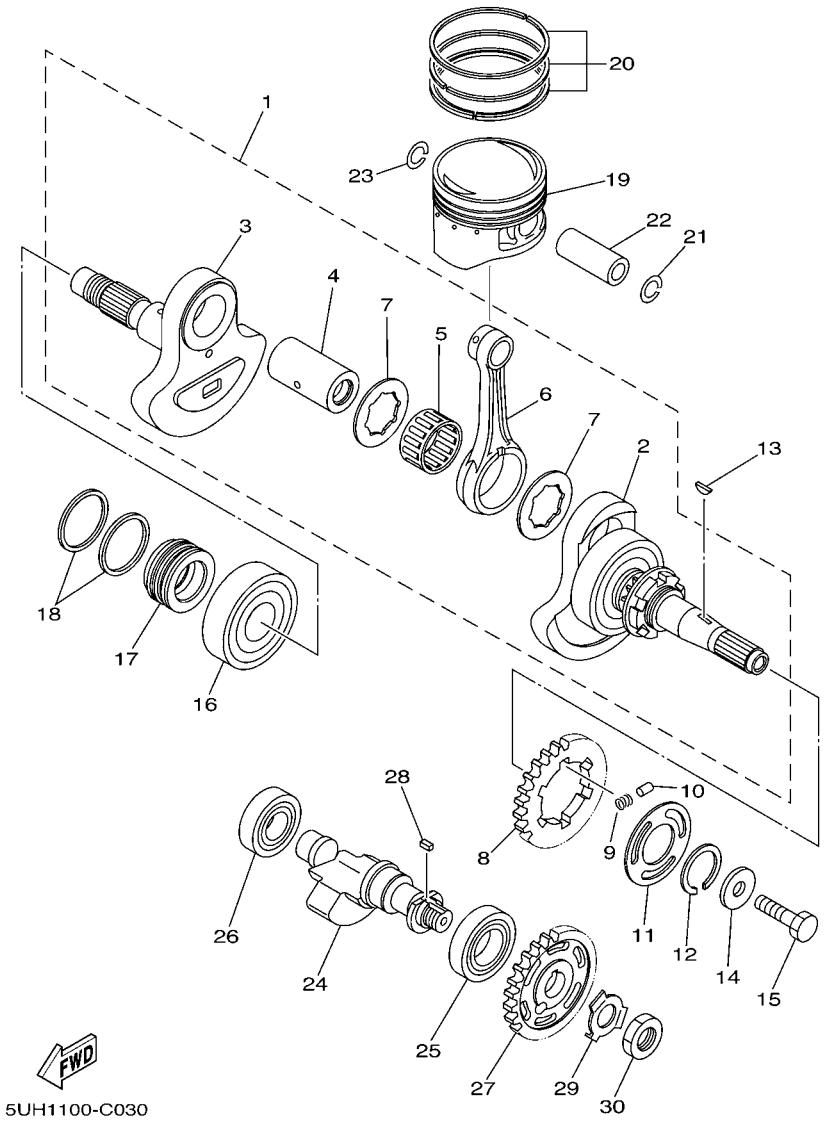

FIG. 3 CRANKSHAFT & PISTON

REF. NO.	PART NO.	DESCRIPTION	USA					REMARKS
1	5UH–11400–00	CRANKSHAFT ASSY	1					
2	5UH–W1141–00	.CRANK SUB ASSY 1	1					
3	5UH–W1142–00	.CRANK SUB ASSY 2	1					
4	30X–11681–00	.PIN, CRANK 1	1					
5	93310–633P5	.BEARING	1					
6	5UH–11651–00	.ROD, CONNECTING	1					
7	90209–33253	.WASHER	2					
8	5UH–11536–00	GEAR, DRIVE	1					
9	90501–22721	SPRING, COMPRESSION	6					
10	93605–10090	PIN, DOWEL	3					
11	5UH–11565–00	WASHER, BEARING COVER	1					
12	99009–32400	CIRCLIP	1					
13	90280–05048	KEY, WOODRUFF	1					
14	90201–10038	WASHER, PLATE	1					
15	90101–10017	BOLT	1					
16	93306–30611	BEARING	1					
17	5UH–16181–00	SPACER 1	1					
18	5KM–11447–00	SEAL, CRANK	2					
19	5UH–11631–00–C0	PISTON (STD)	1					
	5UH–11636–00	PISTON (0.50MM O/S)	1					AP
	5UH–11638–00	PISTON (1.00MM O/S)	1					AP
20	4GB–11610–00	PISTON RING SET (STD)	1					
	4GB–11610–20	PISTON RING SET (0.50MM O/S)	1					AP
	4GB–11610–40	PISTON RING SET (1.00MM O/S)	1					AP
21	93450–19095	CIRCLIP	1					
22	55V–11633–00	PIN, PISTON	1					
23	93450–19095	CIRCLIP	1					

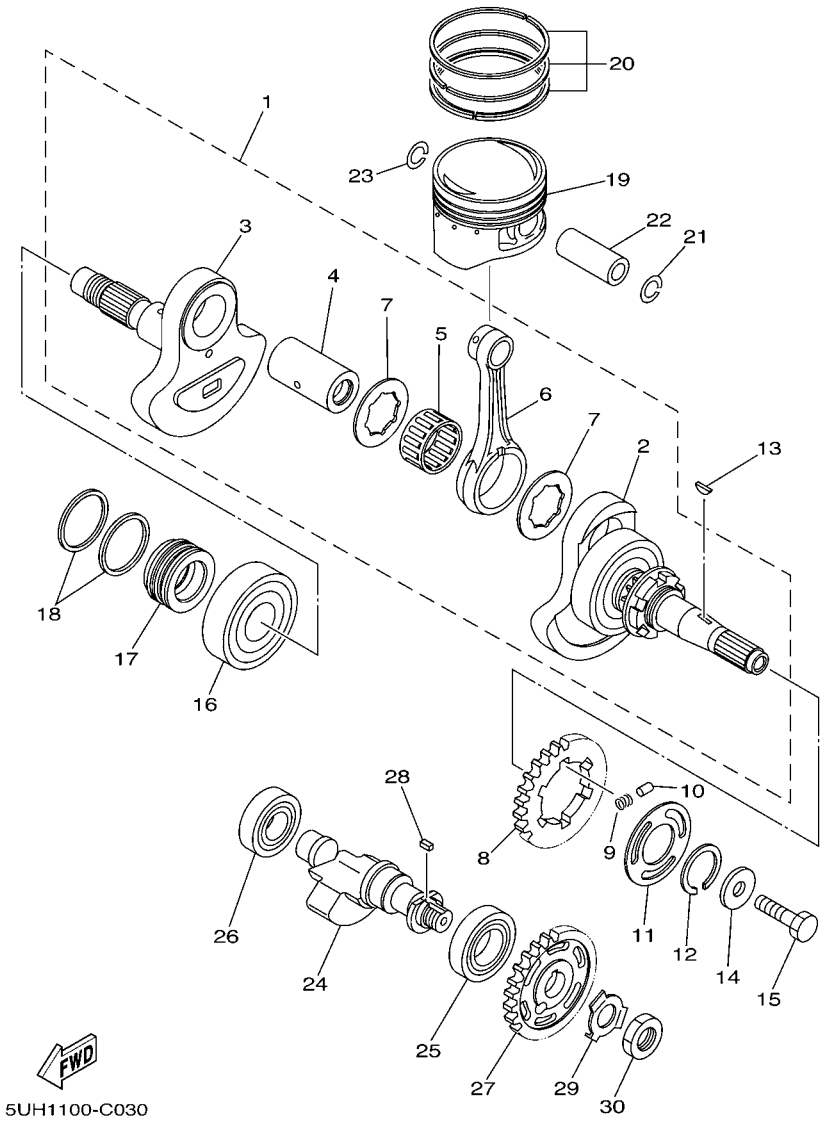

FIG. 3 CRANKSHAFT & PISTON

REF. NO.	PART NO.	DESCRIPTION	USA					REMARKS
24	5UH–11454–01	WEIGHT 1	1					
25	93306–00612	BEARING	1					
26	93306–20402	BEARING	1					
27	5UH–11531–00	GEAR, BALANCE WEIGHT	1					
28	90282–05013	KEY, STRAIGHT	1					
29	90215–16258	WASHER, LOCK	1					
30	90170–16326	NUT	1					

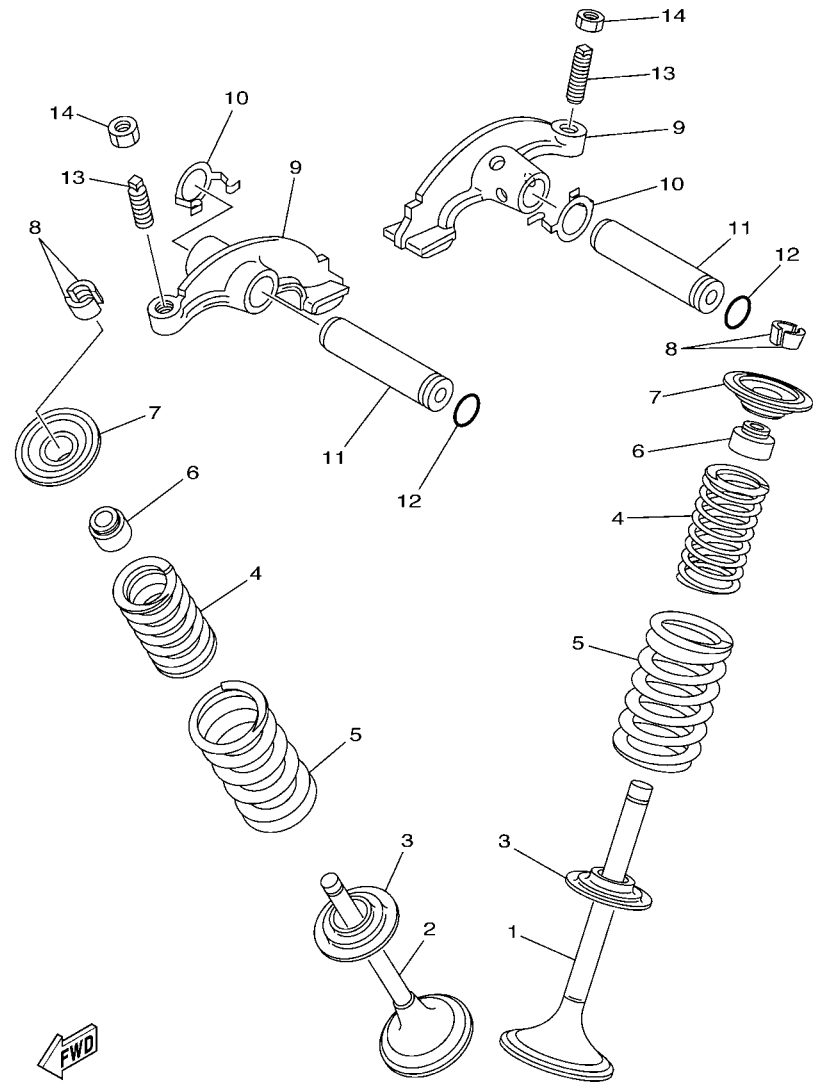

FIG. 4 VALVE

REF. NO.	PART NO.	DESCRIPTION	USA					REMARKS
1	1UY–12111–01	VALVE, INTAKE	1					
2	1UY–12121–01	VALVE, EXHAUST	1					
3	3Y1–12116–00	SEAT, VALVE SPRING	2					
4	22U–12113–00	SPRING, VALVE INNER	2					
5	1UY–12114–01	SPRING, VALVE OUTER	2					
6	M01–12129–00	SEAL, VALVE STEM	2					
7	3Y1–12117–01	RETAINER, VALVE SPRING	2					
8	1J7–12118–00	COTTER, VALVE	4					
9	3GD–12151–11	ARM, VALVE ROCKER	2					
10	90206–12001	WASHER, WAVE	2					
11	4SH–12156–00	SHAFT, ROCKER 2	2					
12	93210–09165	O-RING	2					
13	31G–12159–02	SCREW, VALVE ADJUSTING	2					
14	31G–12158–00	NUT, LOCK	2					

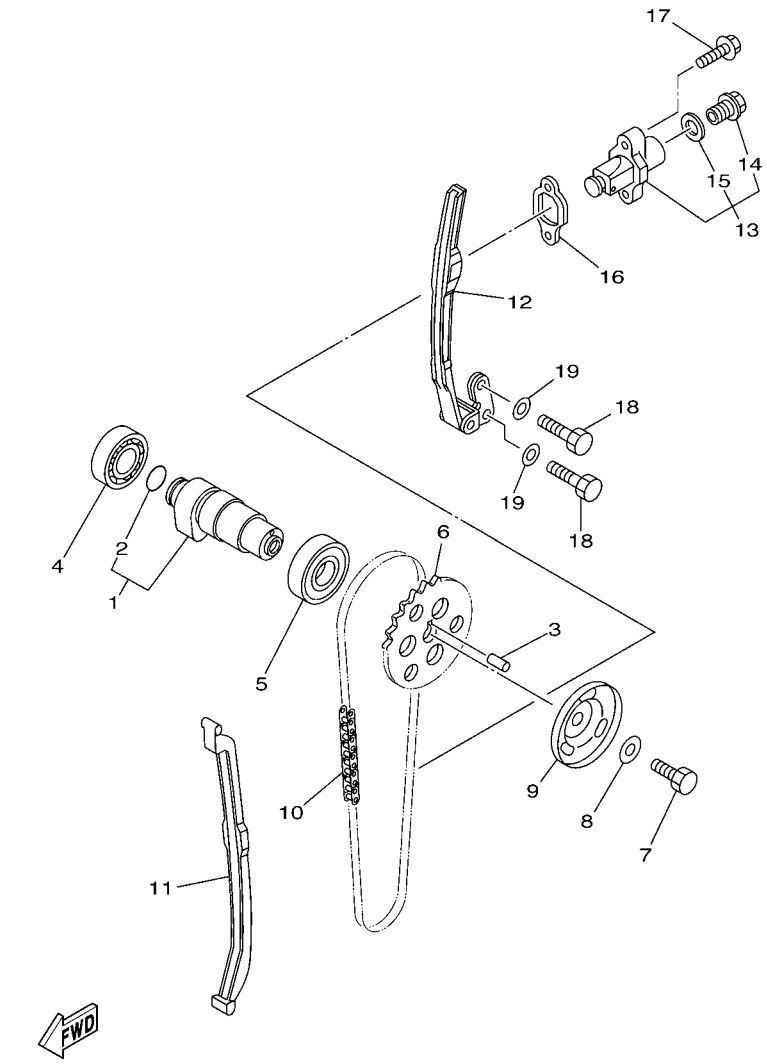

5UHG100-F050

FIG. 5 CAMSHAFT & CHAIN

REF. NO.	PART NO.	DESCRIPTION	USA					REMARKS
1	5UH–12170–10	CAMSHAFT ASSY 1	1					
2	93210–17003	.O-RING	1					
3	93604–10011	PIN, DOWEL	1					
4	93306–00438	BEARING	1					NIHONSEIKO
5	93306–00502	BEARING	1					
6	5UH–12176–00	SPROCKET, CAM CHAIN	1					
7	90101–10016	BOLT	1					
8	90201–10591	WASHER, PLATE	1					
9	4KB–11145–00	PLATE, BREATHER 2	1					
10	94591–87110	CHAIN (92RH2005-110M)	1					
11	5UH–12231–00	GUIDE, STOPPER 1	1					
12	5UH–12241–00	GUIDE, STOPPER 2	1					
13	31G–12210–01	TENSIONER ASSY, CAM CHAIN	1					
14	31G–12222–00	.PLUG	1					
15	31G–12214–00	.GASKET	1					
16	3GD–12213–00	GASKET, TENSIONER CASE	1					
17	95022–06025	BOLT, FLANGE	2					
18	97022–06016	BOLT	2					
19	92902–06600	WASHER, PLATE	2					

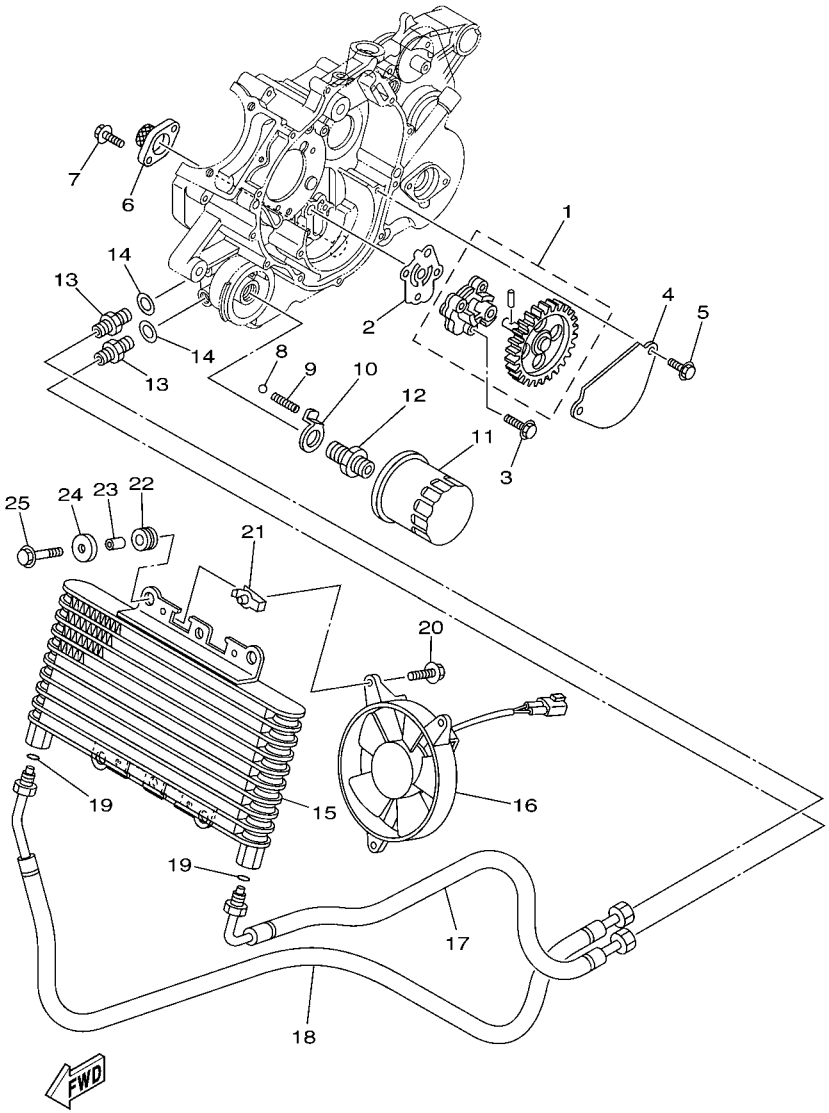

5UH1100-C060

FIG. 6 OIL PUMP

REF. NO.	PART NO.	DESCRIPTION	USA					REMARKS
1	5UH–13300–00	OIL PUMP ASSY	1					
2	5UH–13329–00	GASKET, PUMP COVER	1					
3	95022–06025	BOLT, FLANGE	3					
4	5UH–13327–00	COVER, PUMP GEAR	1					
5	95022–06012	BOLT, FLANGE	2					
6	5UH–13411–00	STRAINER, OIL	1					
7	90105–05016	BOLT, FLANGE	2					
8	93505–16006	BALL	1					
9	90501–101A7	SPRING, COMPRESSION	1					
10	5UH–1319K–00	PLATE	1					
11	5GH–13440–20	ELEMENT ASSY, OIL CLEANER	1					
12	90401–20145	BOLT, UNION	1					
13	1S3–13132–00	JOINT	2					
14	90430–14043	GASKET	2					
15	5UH–E3480–00	ELEMENT, OIL COOLER	1					
16	5UH–E2405–00	BLOWER ASSY	1					
17	5UH–E3464–01	HOSE, OIL 1	1					
18	3D5–E3465–00	HOSE, OIL 2	1					
19	93210–08561	O-RING	2					
20	5UH–E3573–00	BOLT 1	3					
21	5UH–E3577–00	CLIP	3					
22	90480–15235	GROMMET	4					
23	90387–06113	COLLAR	4					
24	90209–06012	WASHER	4					
25	95802–06020	BOLT, FLANGE	4					

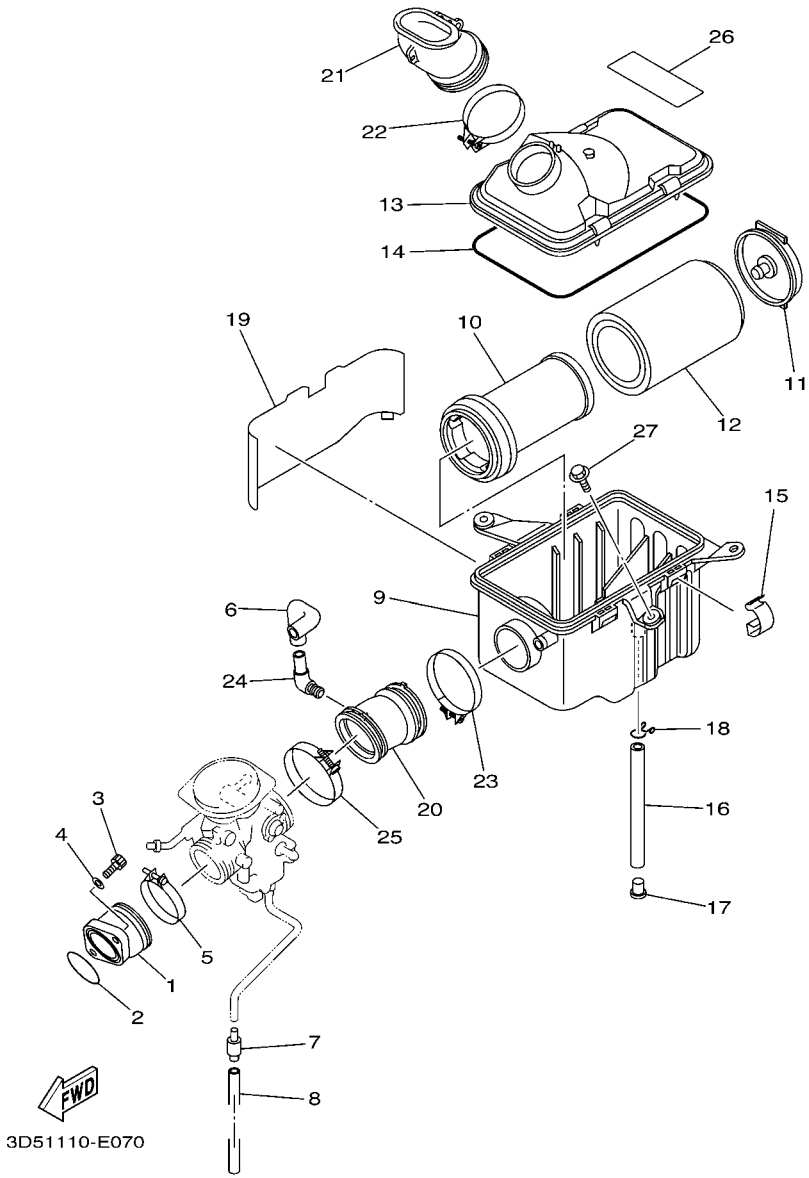

FIG. 7 INTAKE

REF. NO.	PART NO.	DESCRIPTION	USA					REMARKS
1	5UH–13586–00	JOINT, CARBURETOR 1	1					
2	93210–44545	O-RING	1					
3	91312–08025	BOLT	2					
4	90201–08070	WASHER, PLATE	2					
5	90450–47002	HOSE CLAMP ASSY	1					
6	5UH–E4349–00	PIPE	1					
7	24W–14193–00	PIPE	1					
8	91A20–07014	TUBE, FLEXIBLE VINYL	1					
9	5UH–E4411–00	CASE, AIR CLEANER 1	1					
10	5UH–E4458–00	GUIDE	1					
11	5UH–E4468–00	PLATE,ELEMENT FITTING	1					
12	5UH–E4451–10	ELEMENT, AIR CLEANER	1					
13	5UH–E4412–00	CAP, CLEANER CASE 1	1					
14	5UH–E4462–00	SEAL	1					
15	5UH–E4424–00	CLIP, CAP FITTING	4					
16	5UH–E4769–10	PIPE, DRAIN	1					
17	5UH–E4191–00	PLUG, DRAIN	1					
18	5UH–E4438–00	CLIP, DRAIN CLEANER	1					
19	5ND–E442F–00	PROTECTOR	1					
20	5UH–E4453–00	JOINT, AIR CLEANER 1	1					
21	5ND–E4437–02	DUCT	1					
22	90450–58002	HOSE CLAMP ASSY	1					
23	90450–58002	HOSE CLAMP ASSY	1					
24	31A–14419–00	PIPE	1					
25	90450–56008	HOSE CLAMP ASSY	1					
26	5UH–2177C–30	PLATE, EPA OFFROAD ATV 1	1					
27	90119–06246	BOLT, WITH WASHER	2					

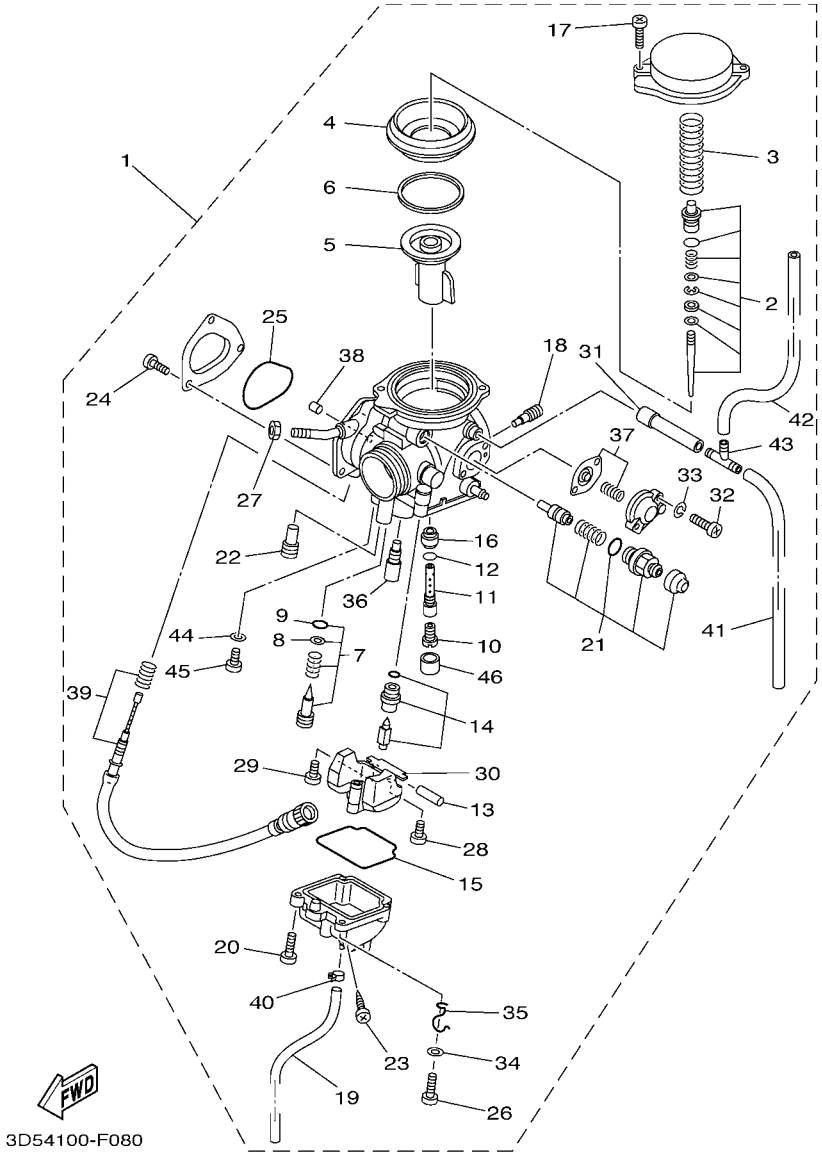

FIG. 8 CARBURETOR

REF. NO.	PART NO.	DESCRIPTION	USA					REMARKS
1	3D5–E4101–10	CARBURETOR ASSY 1	1					
2	5UH–1490J–10	.NEEDLE SET	1					
3	5DM–14933–00	.SPRING, DIAPHRAGM	1					
4	5GH–14940–10	.DIAPHRAGM ASSY	1					
5	5DM–14112–00	.VALVE, THROTTLE 1	1					
6	5GH–14918–10	.RING	1					
7	5UH–14105–10	.PILOT SCREW SET	1					WHITE SPRING
8	3H1–14962–00	..WASHER	1					
9	3H1–14147–00	..O-RING	1					
10	3G2–1423E–51	.JET, MAIN (#128.8)	1					
11	5GH–14261–00	.HOLDER	1					
12	583–14561–00	.O-RING	1					
13	127–14186–00	.PIN, FLOAT	1					
14	4SV–14107–20	.NEEDLE VALVE SET	1					
15	5DM–14561–00	.O-RING	1					
16	5DM–14141–42	.NOZZLE, MAIN	1					
17	4KM–14216–00	.SCREW	2					
18	1HX–14231–16	.JET, MAIN (# 80)	1					
19	4KB–14193–20	.PIPE	1					
20	98580–04010	.SCREW, PAN HEAD	3					
21	5UH–1410A–00	.STARTER SET	1					
22	3G2–1423A–62	.JET, MAIN (#57.5)	1					
23	3FV–14191–00	.PLUG, DRAIN	1					
24	98507–04006	.SCREW, PAN HEAD	3					
25	5FU–E4147–00	.O-RING	1					
26	98507–04014	.SCREW, PAN HEAD	1					
27	522–14161–00	.NUT, CABLE ADJUSTING	1					

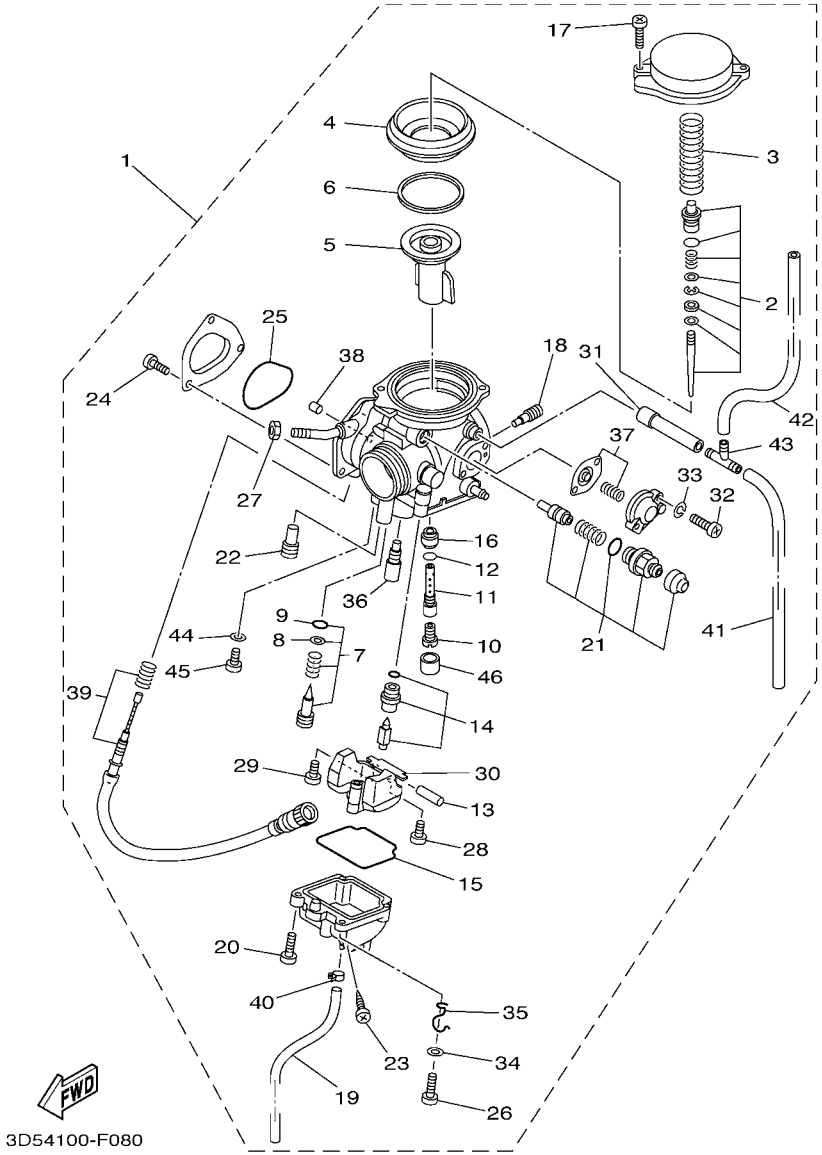

FIG. 8 CARBURETOR

REF. NO.	PART NO.	DESCRIPTION	USA					REMARKS
28	98507–04008	.SCREW, PAN HEAD	1					
29	1FN–14565–00	.SCREW	1					
30	5DM–14985–00	.FLOAT	1					
31	5FU–14197–00	.PIPE	1					
32	98501–04014	.SCREW, PAN HEAD	2					
33	92902–04100	.WASHER, SPRING	2					
34	92907–04600	.WASHER	1					
35	5GH–14937–00	.CLIP	1					
36	4KM–14142–17	.JET, PILOT (# 17.5)	1					
37	5EL–1490H–00	.DIAPHRAGM SET 5	1					
38	5FU–E4155–00	.GUIDE, CABLE	1					
39	5UH–14103–00	.THROTTLE SCREW SET	1					
40	4XE–14937–00	.CLIP	1					
41	5UH–14348–00	.PIPE 1	1					
42	7T9–14987–00	.HOSE	1					
43	5FU–14167–00	.CONNECTOR	1					
44	256–14956–01	.WASHER	1					
45	3DM–14216–00	.SCREW	1					
46	5GH–14918–00	.RING	1					

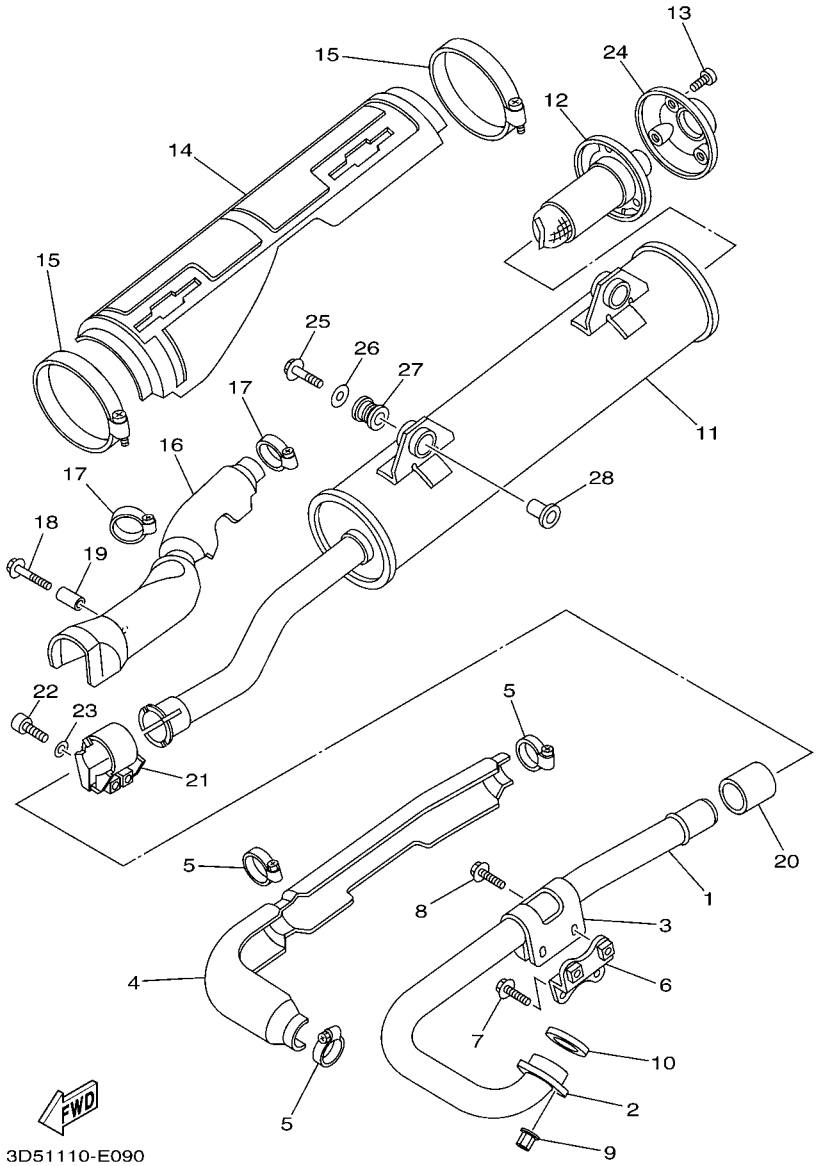

FIG. 9 EXHAUST

REF. NO.	PART NO.	DESCRIPTION	USA					REMARKS
1	5UH–E4611–00	PIPE, EXHAUST 1	1					
2	5UH–E4612–00	NUT, RING	1					
3	5UH–E477R–00	BAND 1	1					
4	5UH–E4628–01	PROTECTOR, EXHAUST PIPE	1					
5	5UH–E477T–00	BAND 2	3					
6	5UH–E477K–01	PLATE 1	1					
7	95812–06016	BOLT, FLANGE	2					
8	95812–06020	BOLT, FLANGE	2					
9	90179–06668	NUT	2					
10	3GD–14613–00	GASKET, EXHAUST PIPE	1					
11	5UH–E4711–00	MUFFLER 1	1					
12	3C2–E4752–00	PIPE, OUTLET	1					
13	5ND–E4719–00	BOLT, MUFFLER	3					
14	5UH–E4718–00	PROTECTOR, MUFFLER 1	1					
15	5ND–E4788–00	BAND, SILENCER	2					
16	5UH–E4728–01	PROTECTOR, MUFFLER 2	1					
17	5UH–E477T–00	BAND 2	2					
18	9580P–06035	BOLT, FLANGE	1					
19	5UH–E4638–00	COLLAR	1					
20	5ND–E4714–00	GASKET, MUFFLER	1					
21	5ND–E4715–00	BAND, MUFFLER	1					
22	5ND–E4777–00	BOLT	2					
23	5ND–E4759–00	WASHER	2					
24	3C2–E4787–00	CAP, SILENCER	1					
25	95822–10040	BOLT, FLANGE	2					
26	90201–10056	WASHER, PLATE	2					
27	5ND–E4737–00	DAMPER, MUFFLER	2					

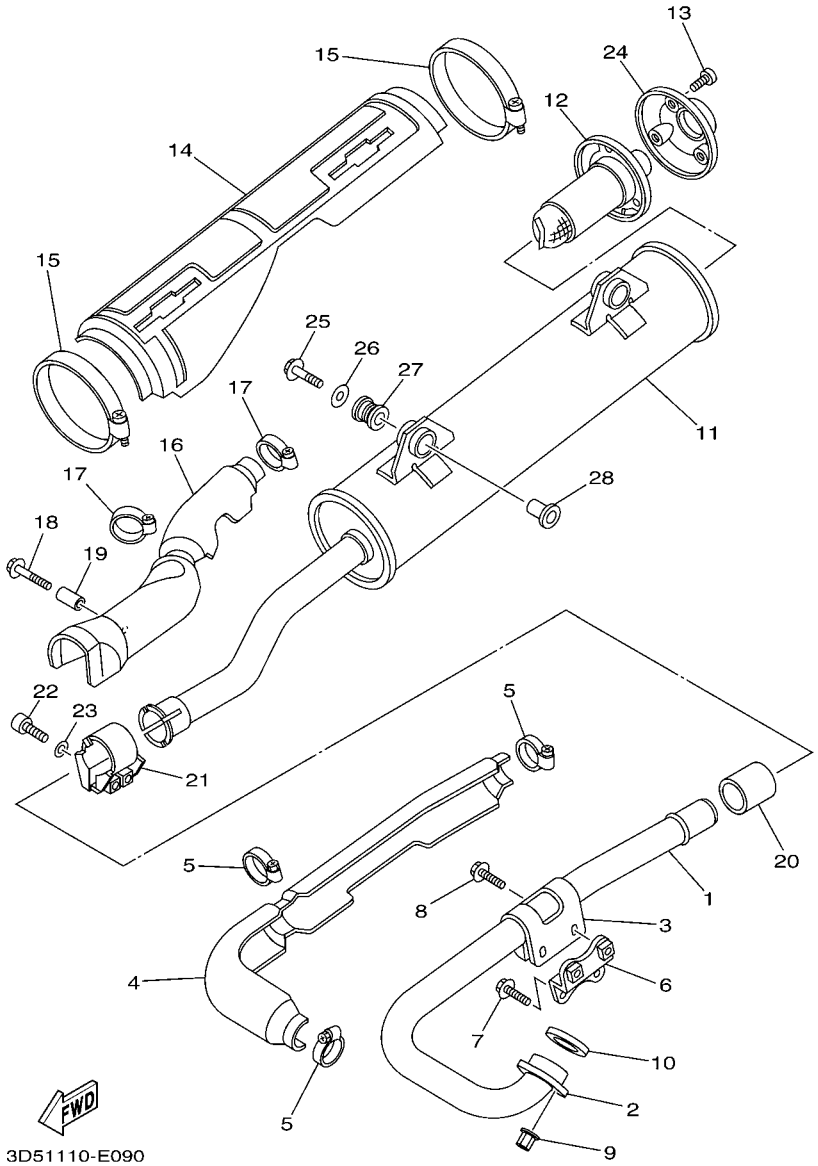

FIG. 9 EXHAUST

REF. NO.	PART NO.	DESCRIPTION	USA					REMARKS
28	90387–10636	COLLAR	2					

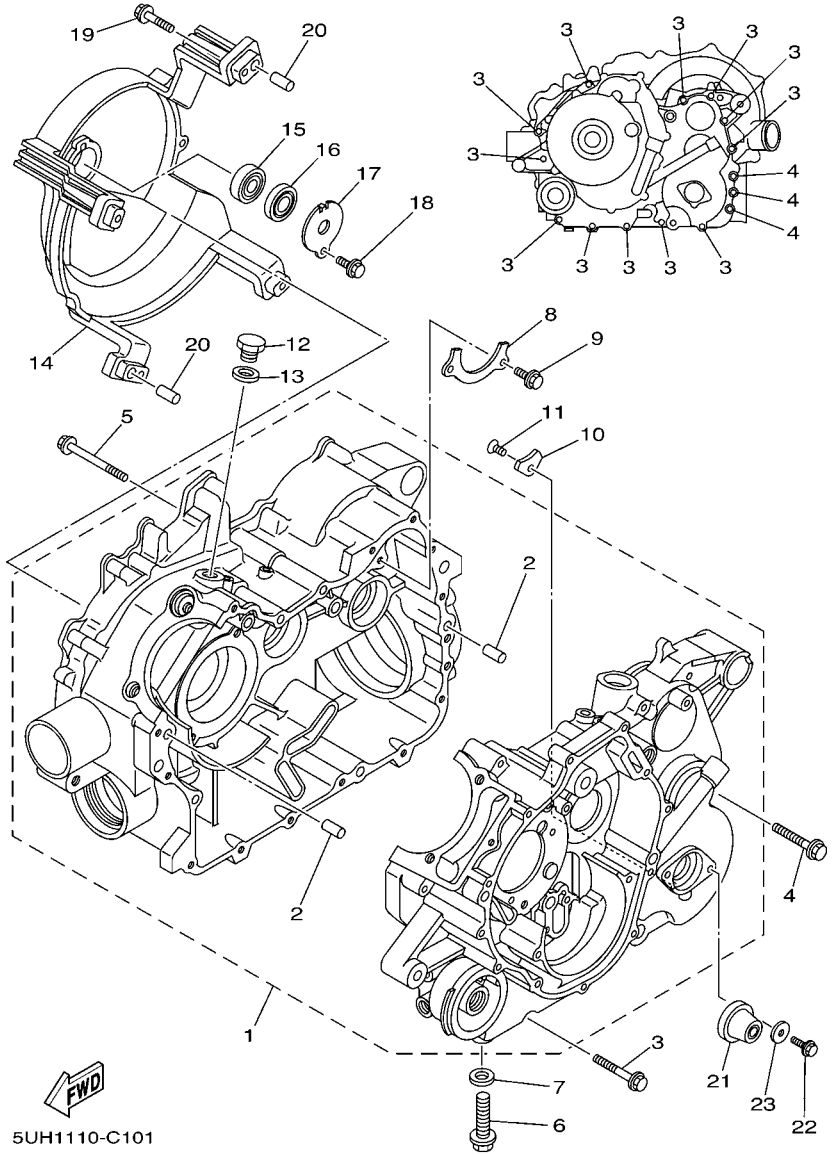

FIG. 10 CRANKCASE

REF. NO.	PART NO.	DESCRIPTION	USA					REMARKS
1	5WH–15100–00	CRANKCASE ASSY	1					
2	99530–10116	.PIN, DOWEL	2					
3	95022–06050	BOLT, FLANGE	12					
4	95022–08045	BOLT, FLANGE	3					
5	95022–06070	BOLT, FLANGE	3					
6	95022–12040	BOLT, FLANGE	1					
7	90201–12172	WASHER, PLATE	1					
8	5GH–15388–00	PLATE, BEARING COVER	1					
9	95822–06012	BOLT, FLANGE	2					
10	2K7–15383–00	PLATE, BEARING COVER	1					
11	90151–06023	SCREW, COUNTERSUNK	1					
12	90340–14029	PLUG, STRAIGHT SCREW	1					
13	214–11198–01	GASKET	1					
14	5UH–15442–00	HOUSING, BEARING	1					
15	93306–20120	BEARING	1					
16	93101–12168	OIL SEAL	1					
17	4WV–15381–00	PLATE, BEARING COVER	1					
18	95022–06012	BOLT, FLANGE	1					
19	95822–06030	BOLT, FLANGE	4					
20	99530–10116	PIN, DOWEL	2					
21	5GH–15385–00	PLUG, BLIND	1					
22	90105–06081	BOLT, FLANGE	2					
23	90201–06095	WASHER, PLATE	2					

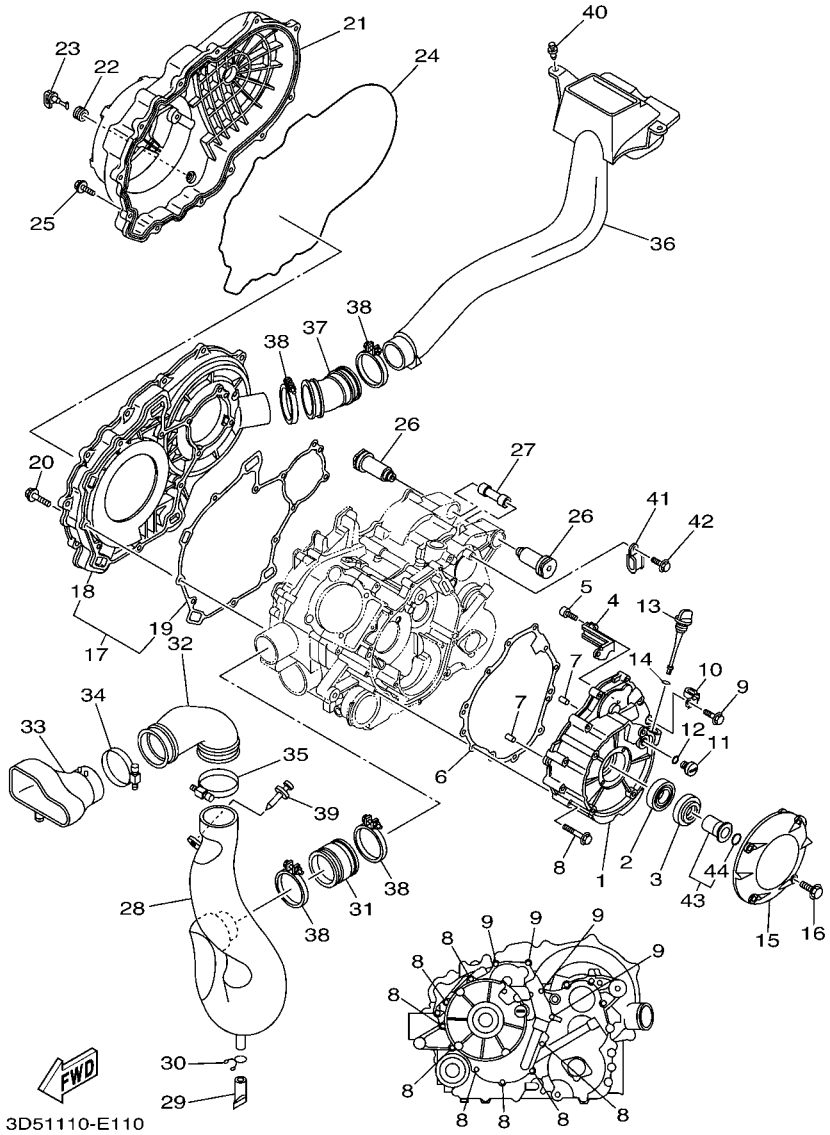

FIG. 11 CRANKCASE COVER 1

REF. NO.	PART NO.	DESCRIPTION	USA					REMARKS
1	5UH–15411–00	COVER, CRANKCASE 1	1					
2	93306–07801	BEARING	1					
3	93102–28476	OIL SEAL	1					
4	5UH–15113–00	PLATE	1					
5	91312–05012	BOLT	2					
6	5UH–15451–00	GASKET, CRANKCASE COVER 1	1					
7	99530–10116	PIN, DOWEL	2					
8	95022–06050	BOLT, FLANGE	8					
9	95022–06030	BOLT, FLANGE	4					
10	90465–08127	CLAMP	1					
11	90340–14117	PLUG, STRAIGHT SCREW	1					
12	93210–14369	O-RING	1					
13	517–15362–02	PLUG, OIL LEVEL	1					
14	93210–19026	O-RING	1					
15	3C2–15492–00	COVER	1					
16	95022–06025	BOLT, FLANGE	4					
17	5UH–15420–00	CRANKCASE COVER ASSY 2	1					
18	5UH–15421–00	.COVER, CRANKCASE 2	1					
19	5UH–15315–00	.SEAL, CRANKCASE	1					
20	95822–06030	BOLT, FLANGE	9					
21	5UH–15431–00	COVER, CRANKCASE 3	1					
22	90480–13018	GROMMET	1					
23	5KM–15351–00	PLUG, DRAIN	1					
24	5UH–15379–00	SEAL, CRANKCASE	1					
25	95822–06020	BOLT, FLANGE	14					
26	90388–10001	DAMPER	2					
27	5UH–15317–00	SPACER, ENGINE MOUNT	1					

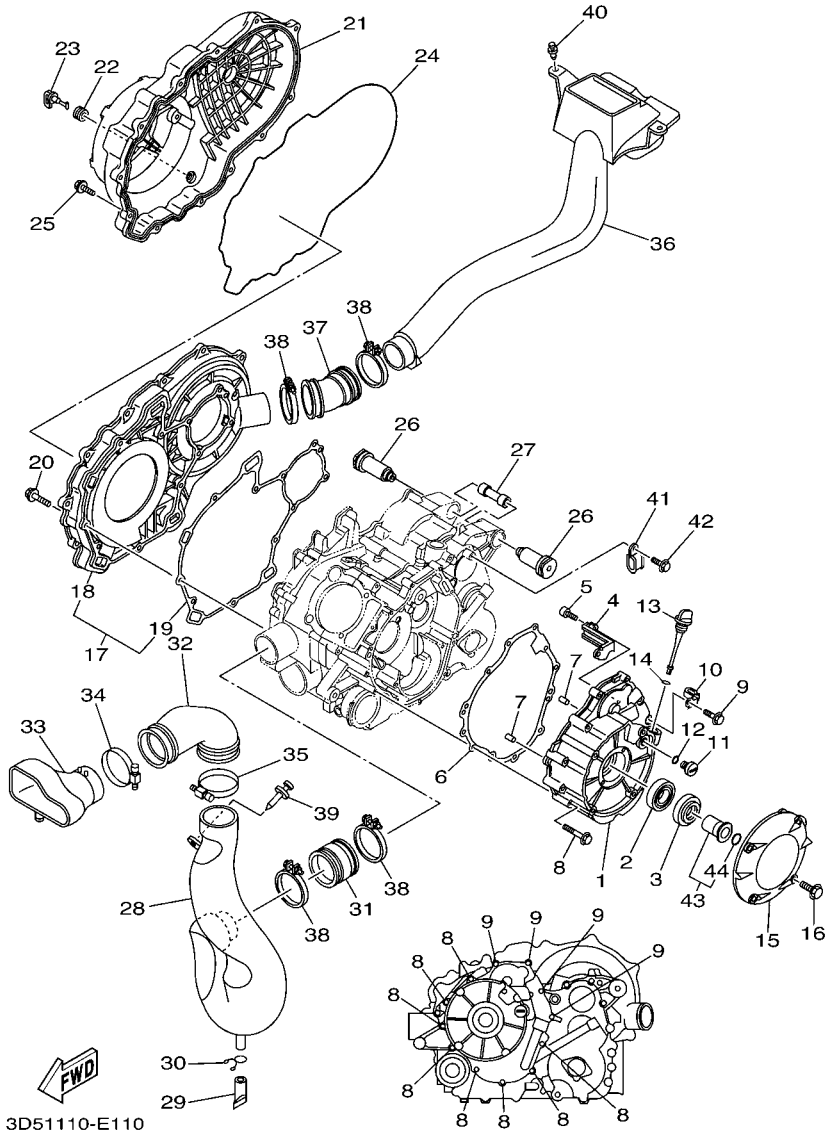

FIG. 11 CRANKCASE COVER 1

REF. NO.	PART NO.	DESCRIPTION	USA					REMARKS
28	3D5–E5471–00	DUCT, AIR	1					
29	5BF–1443E–00	PIPE, DRAIN	1					
30	90467–160A4	CLIP	1					
31	5ND–E5472–00	SEAL, AIR DUCT	1					
32	3C2–E5472–00	SEAL, AIR DUCT	1					
33	3C2–E2692–00	DUCT, 2	1					
34	3C2–F1823–00	CLAMP, HOSE	1					
35	3C2–F1823–00	CLAMP, HOSE	1					
36	5ND–E5473–00	DUCT, AIR	1					
37	5UH–E5474–00	SEAL, AIR DUCT	1					
38	90450–64002	HOSE CLAMP ASSY	4					
39	90269–06800	RIVET	1					
40	90269–08813	RIVET	2					
41	90461–08134	CLAMP	1					
42	95022–06012	BOLT, FLANGE	1					
43	3D5–15730–00	STARTER PULLEY ASSY	1					
44	93210–16290	.O-RING	1					

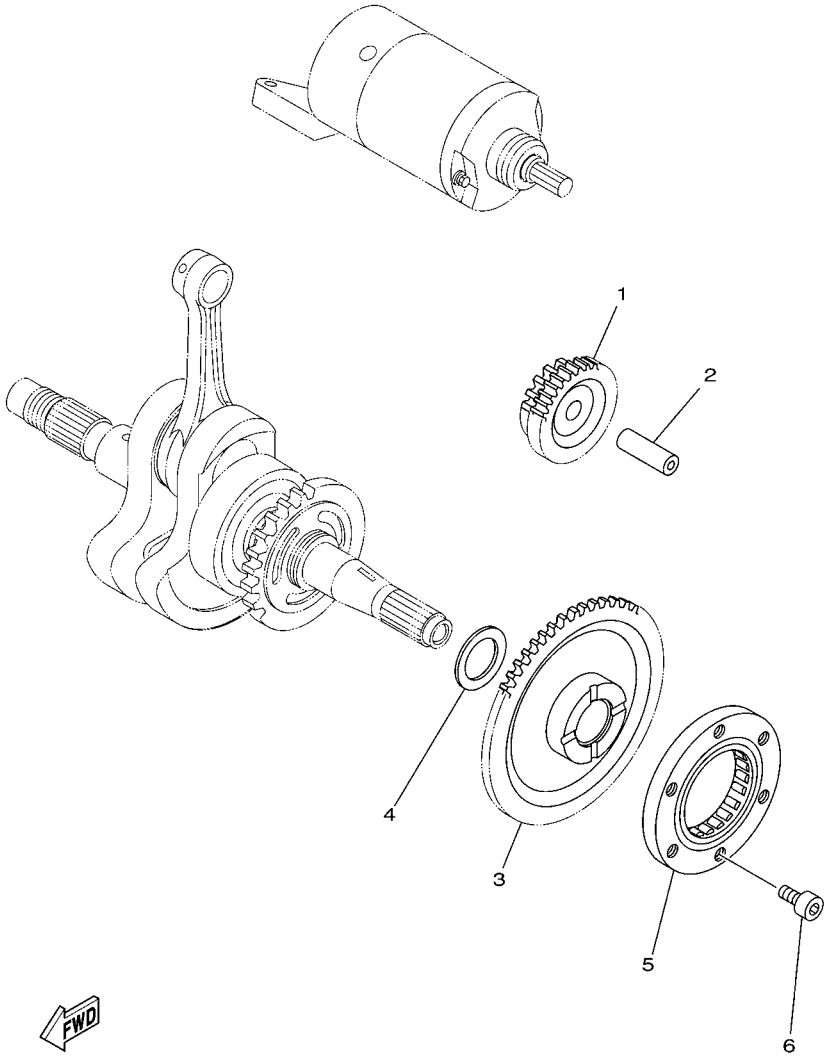

5UH1100-C130

FIG. 12 STARTER CLUTCH

REF. NO.	PART NO.	DESCRIPTION	USA					REMARKS
1	5UH–15512–00	GEAR, IDLER 1	1					
2	1VJ–15521–00	SHAFT 1	1					
3	5UH–15517–00	GEAR, IDLER 2	1					
4	90201–25290	WASHER, PLATE	1					
5	5KM–15590–00	STARTER ONE-WAY ASSY	1					
6	91312–08016	BOLT	3					

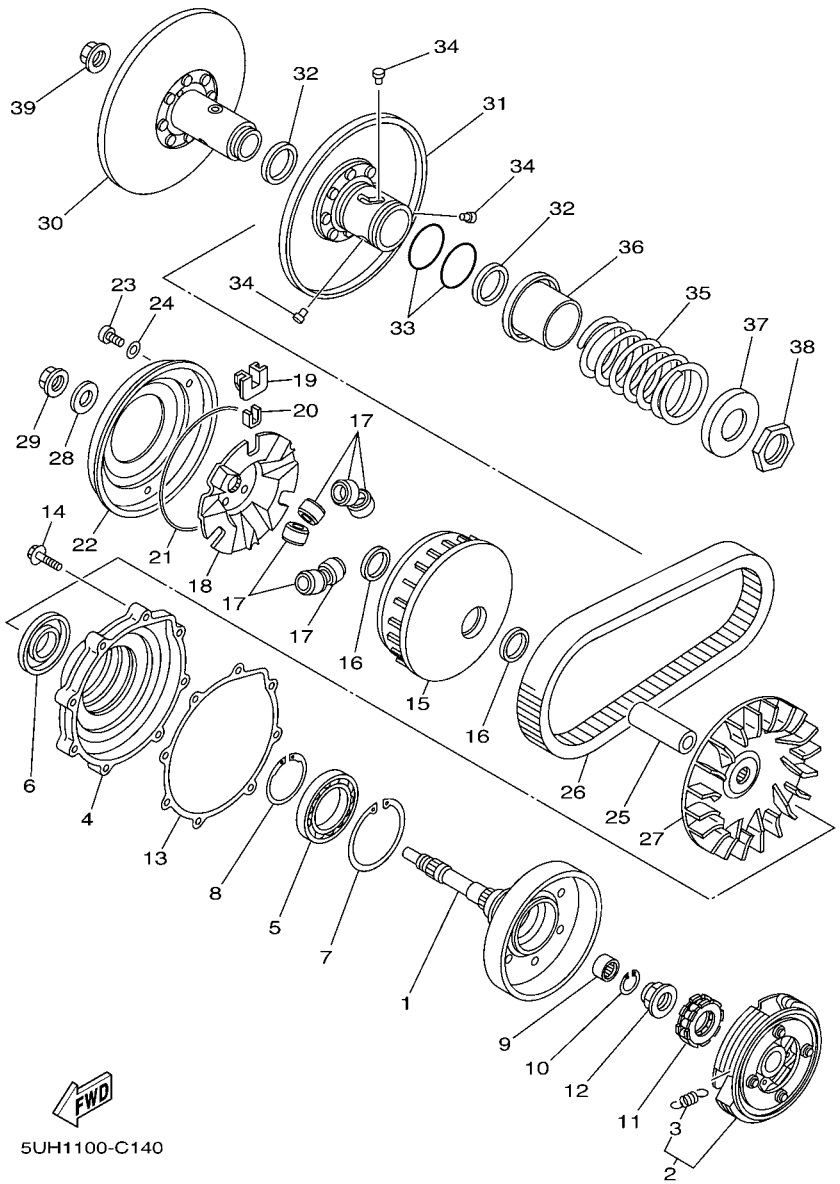

FIG. 13 CLUTCH

REF. NO.	PART NO.	DESCRIPTION	USA					REMARKS
1	5UH–16611–00	CLUTCH HOUSING COMP.	1					
2	5UH–16620–00	CLUTCH CARRIER ASSY	1					
3	5UH–16626–00	.SPRING, CLUTCH WEIGHT 1	4					
4	5UH–15163–00	HOUSING, BEARING 1	1					
5	93316–01003	BEARING	1					
6	93102–32483	OIL SEAL	1					
7	99009–80500	CIRCLIP	1					
8	93410–46079	CIRCLIP	1					
9	93315–21813	BEARING	1					
10	93450–24062	CIRCLIP	1					
11	5GH–16664–00	BEARING, ONE WAY	1					
12	90179–22005	NUT	1					
13	5UH–15463–00	GASKET, COVER PINION 2	1					
14	95022–06030	BOLT, FLANGE	8					
15	5UH–17620–00	PRIMARY SLIDING SHEAVE COMP.	1					
16	93101–31167	OIL SEAL	2					
17	4WV–17632–00	WEIGHT	6					
18	5UH–17623–00	CAM	1					
19	4WV–17653–00	SLIDER	3					
20	4WV–17654–01	SPACER 1	3					
21	93211–52001	O-RING	1					
22	5UH–17639–00	STOPPER	1					
23	90157–04006	SCREW, PAN HEAD	3					
24	90201–047R9	WASHER, PLATE	3					
25	5UH–17645–00	COLLAR	1					
26	5UH–17641–01	V-BELT	1					
27	5UH–17611–00	SHEAVE, PRIMARY FIXED	1					

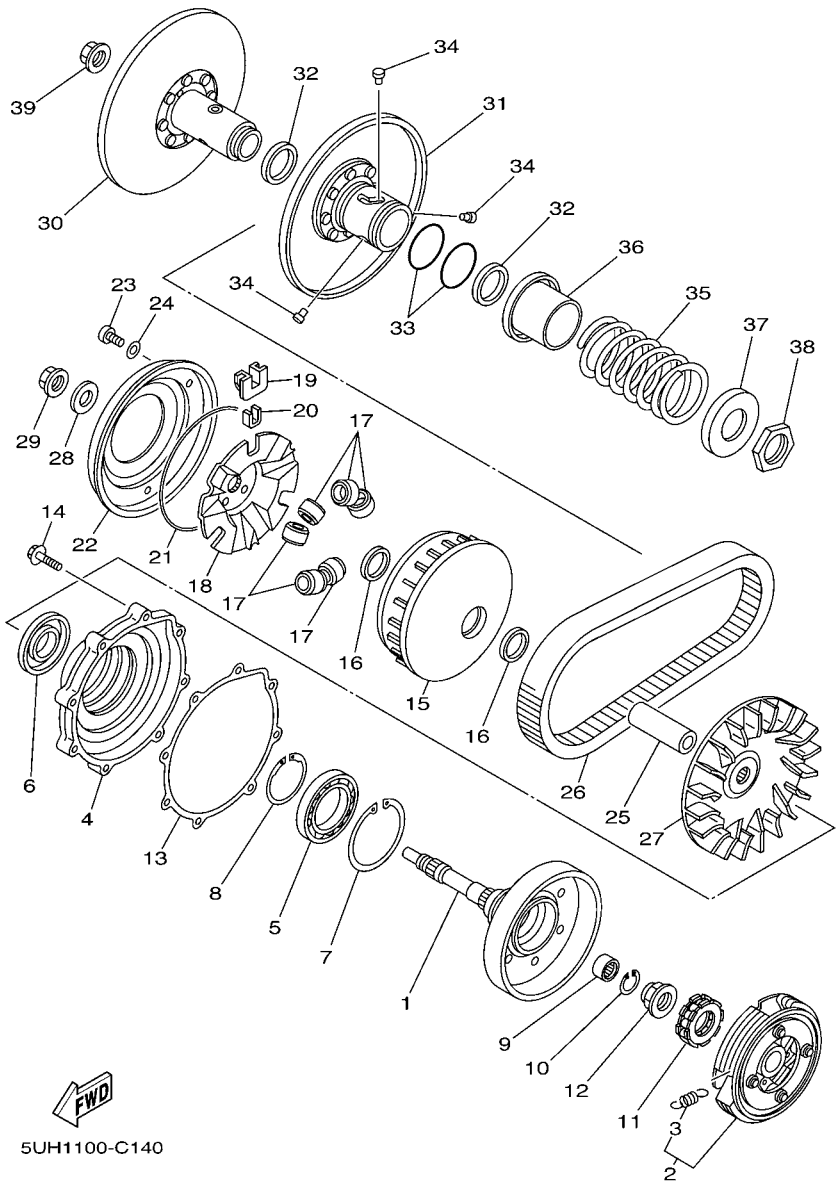

FIG. 13 CLUTCH

REF. NO.	PART NO.	DESCRIPTION	USA					REMARKS
28	90201–190T7	WASHER, PLATE	1					
29	90179–16005	NUT	1					
30	5UH–17660–00	SECONDARY FIXED SHEAVE COMP.	1					
31	5UH–17670–00	SECONDARY SLIDING SHEAVE	1					
32	93104–41119	OIL SEAL	2					
33	93210–44545	O-RING	2					
34	4CW–17664–00	PIN, GUIDE	3					
35	90501–580A0	SPRING, COMPRESSION	1					
36	5UH–17684–00	SEAT, SECONDARY SPRING	1					
37	5UH–17644–00	SEAT,SPRING	1					
38	90170–36279	NUT	1					
39	90179–16005	NUT	1					

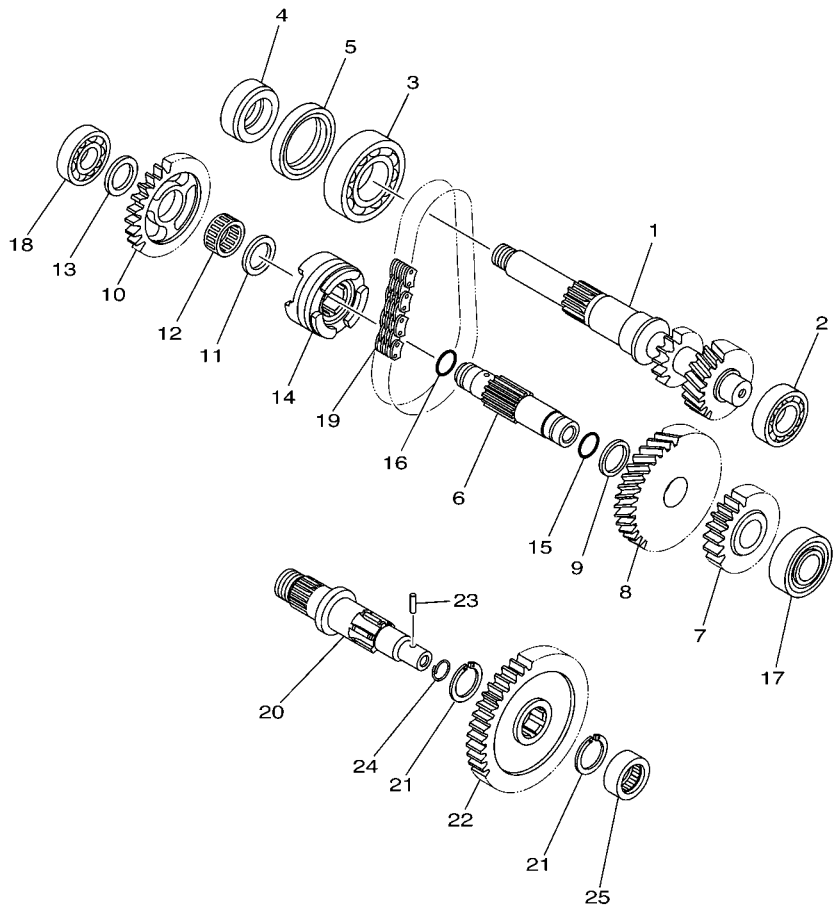

5UHG100-F150

FIG. 14 TRANSMISSION

REF. NO.	PART NO.	DESCRIPTION	USA					REMARKS
1	5UH–17681–20	SHAFT, SECONDARY	1					
2	93306–00401	BEARING	1					
3	93306–20601	BEARING	1					
4	5UH–17168–00	COLLAR 2	1					
5	93102–42004	OIL SEAL	1					
6	5UH–17421–10	AXLE, DRIVE	1					
7	5UH–17582–11	GEAR, MIDDLE DRIVE (21T)	1					
8	5UH–17223–10	GEAR, HIGH WHEEL (35T)	1					
9	90201–21015	WASHER, PLATE	1					
10	5UH–17453–00	SPROCKET, DRIVEN (26T)	1					
11	90201–20278	WASHER, PLATE	1					
12	93310–420F2	BEARING	1					
13	90201–17013	WASHER, PLATE	1					
14	5UH–17285–00	CLUTCH, DOG	1					
15	93210–17003	O-RING	1					
16	93210–14299	O-RING	1					
17	93306–20464	BEARING	1					
18	93306–20306	BEARING	1					
19	94591–54034	CHAIN (23RH302-34ASM)	1					
20	5UH–17523–00	SHAFT	1					
21	93440–25084	CIRCLIP	2					
22	5UH–17583–01	GEAR, MIDDLE DRIVEN (41T)	1					
23	93603–14240	PIN, DOWEL	1					
24	93440–14155	CIRCLIP	1					
25	93311–42077	BEARING	1					

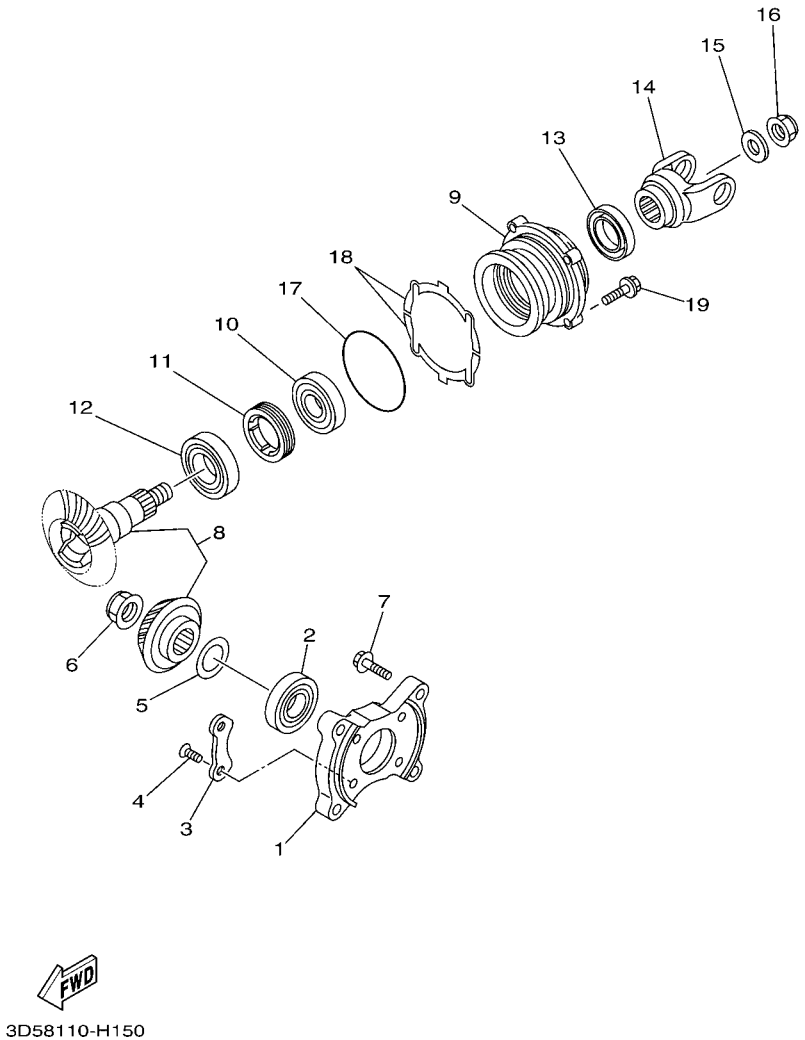

FIG. 15 MIDDLE DRIVE GEAR

REF. NO.	PART NO.	DESCRIPTION	USA					REMARKS
1	5UH–17521–00	HOUSING, BEARING	1					
2	93306–20532	BEARING	1					
3	11H–15383–02	PLATE, BEARING COVER	2					
4	90149–08013	SCREW	4					
5	5KM–17531–00	SHIM, PINION (0.1T)	1					UR
	5KM–17531–10	SHIM, PINION (0.15T)	1					UR
	5KM–17531–20	SHIM, PINION (0.2T)	1					UR
	5KM–17531–30	SHIM, PINION (0.3T)	1					UR
	5KM–17531–40	SHIM, PINION (0.4T)	1					UR
	5KM–17531–50	SHIM, PINION (0.5T)	1					UR
	5KM–17531–60	SHIM, PINION (0.55T)	1					UR
	5KM–17531–70	SHIM, PINION (0.6T)	1					UR
6	90179–22015	NUT	1					
7	90105–08150	BOLT, FLANGE	4					
8	5UH–17530–10	PINION SET	1					
9	5GH–17551–00	HOUSING, BEARING	1					
10	93306–30538	BEARING	1					
11	90179–65305	NUT	1					
12	93306–20715	BEARING	1					
13	93101–35097	OIL SEAL	1					
14	5UH–17556–10	YOKE, JOINT	1					
15	90201–166R6	WASHER, PLATE	1					
16	90179–16006	NUT	1					
17	93210–78544	O-RING	1					
18	5GH–17531–00	SHIM, PINION (0.1T)	2					UR
	5GH–17531–10	SHIM, PINION (0.15T)	2					UR
	5GH–17531–20	SHIM, PINION (0.2T)	2					UR

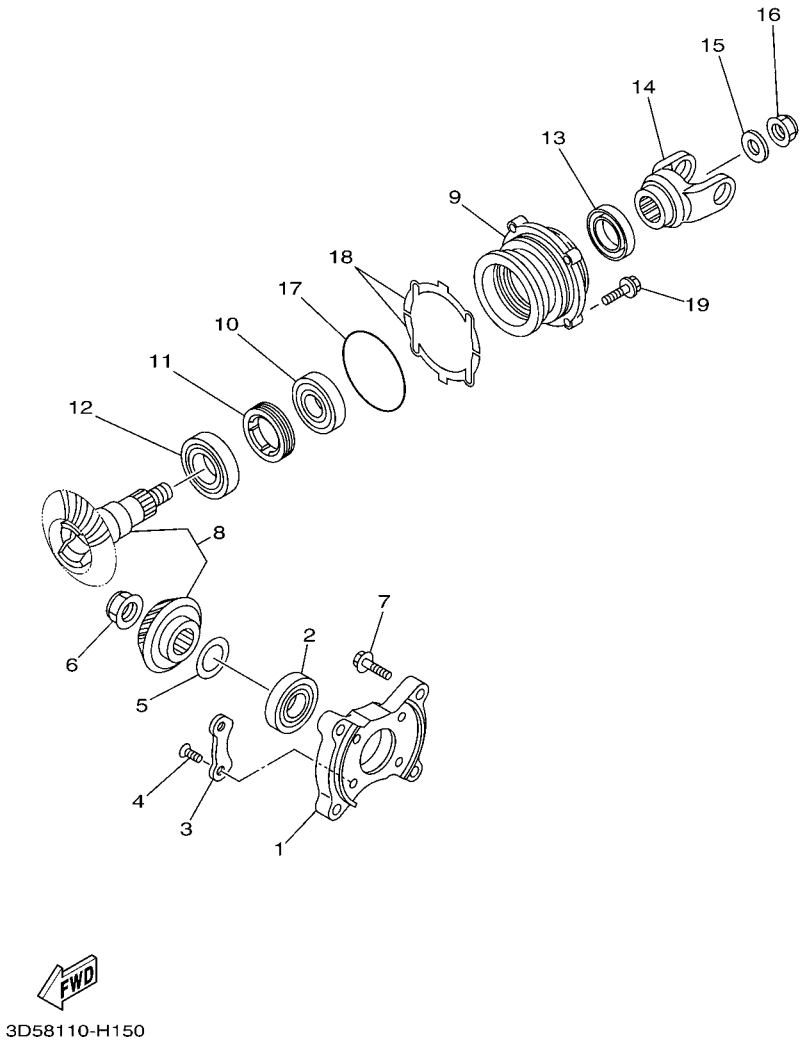

FIG. 15 MIDDLE DRIVE GEAR

REF. NO.	PART NO.	DESCRIPTION	USA					REMARKS
18	5GH–17531–30	SHIM, PINION (0.3T)	2					UR
	5GH–17531–40	SHIM, PINION (0.4T)	2					UR
	5GH–17531–50	SHIM, PINION (0.5T)	2					UR
	5GH–17531–60	SHIM, PINION (0.6T)	2					UR
19	90119–08114	BOLT, WITH WASHER	4					

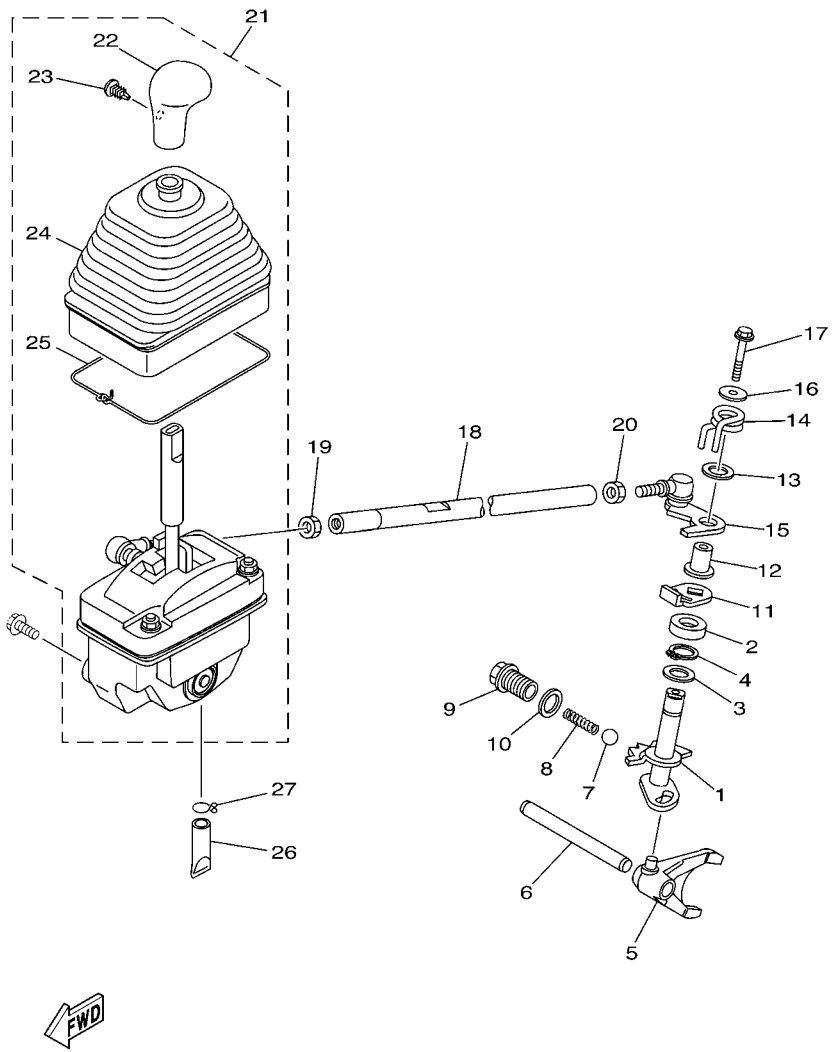

3D51110-E160

FIG. 16 SHIFT SHAFT

REF. NO.	PART NO.	DESCRIPTION	USA					REMARKS
1	5UH–18103–00	SHIFT SHAFT COMP.	1					
2	93102–15212	OIL SEAL	1					
3	90201–15701	WASHER, PLATE (T=1.0)	1					
4	93440–15012	CIRCLIP	1					
5	5UH–18511–00	FORK, SHIFT 1	1					
6	2A6–18535–00	BAR, SHIFT FORK GUIDE 2	1					
7	93503–08007	BALL	1					
8	90501–10353	SPRING, COMPRESSION	1					
9	90105–14003	BOLT, FLANGE	1					
10	90430–14194	GASKET	1					
11	4SH–18198–00	LEVER	1					
12	90387–0613B	COLLAR	1					
13	90201–132G5	WASHER, PLATE	1					
14	90508–35764	SPRING, TORSION	1					
15	5UH–18191–00	LEVER	1					
16	90201–06036	WASHER, PLATE	1					
17	95812–06035	BOLT, FLANGE	1					
18	3D5–18115–00	ROD, SHIFT	1					
19	90170–08358	NUT	1					
20	95302–08700	NUT	1					
21	5UH–18300–01	SHIFTER ASSY	1					
22	5TE–18174–00	.KNOB, SHIFT LEVER	1					
23	90269–05055	.RIVET	1					
24	5GH–18131–00	.BOOT, SEALING	1					
25	5GH–18617–00	.STOPPER,RUBBER	1					
26	5BF–1443E–00	PIPE, DRAIN	1					
27	90467–150A2	CLIP	1					

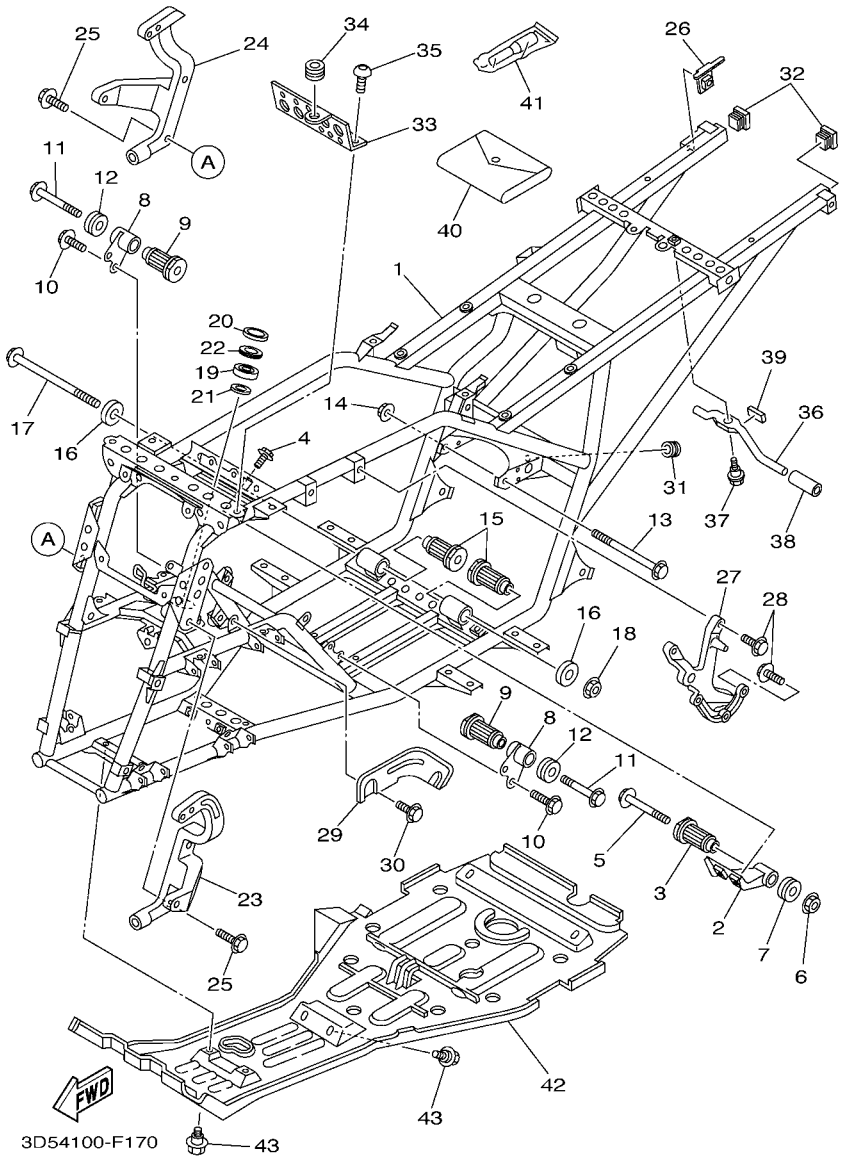

FIG. 17 FRAME

REF. NO.	PART NO.	DESCRIPTION	USA					REMARKS
1	3D5–F1110–00	FRAME COMP.	1					
2	5UH–F1315–01	STAY, ENGINE 2	1					
3	5UH–E5336–00	DAMPER, ENGINE MOUNT 3	1					
4	95812–08012	BOLT, FLANGE	2					
5	95812–10110	BOLT, FLANGE	1					
6	95602–10200	NUT, U FLANGE	1					
7	5ND–F1486–00	DAMPER 2	1					
8	5UH–F1316–01	STAY, ENGINE 3	2					
9	5UH–E5336–00	DAMPER, ENGINE MOUNT 3	2					
10	95812–08012	BOLT, FLANGE	4					
11	95812–10080	BOLT, FLANGE	2					
12	5ND–F1486–00	DAMPER 2	2					
13	90105–10193	BOLT, FLANGE	1					
14	95602–10200	NUT, U FLANGE	1					
15	5UH–E5336–00	DAMPER, ENGINE MOUNT 3	2					
16	5ND–F1488–00	DAMPER	2					
17	90105–10284	BOLT, FLANGE	1					
18	95602–10200	NUT, U FLANGE	1					
19	93306–203YN	BEARING	1					
20	93102–25081	OIL SEAL	1					
21	93102–25099	OIL SEAL	1					
22	2GU–23872–00	HOLDER, BEARING	1					
23	3C2–F831V–00	STAY, HEAD LIGHT 1	1					
24	3C2–F832V–00	STAY, HEAD LIGHT 2	1					
25	95812–08025	BOLT, FLANGE	4					
26	3C2–F1446–01	STAY, MUFFLER 2	1					
27	5ND–F1585–01	ARM	1					

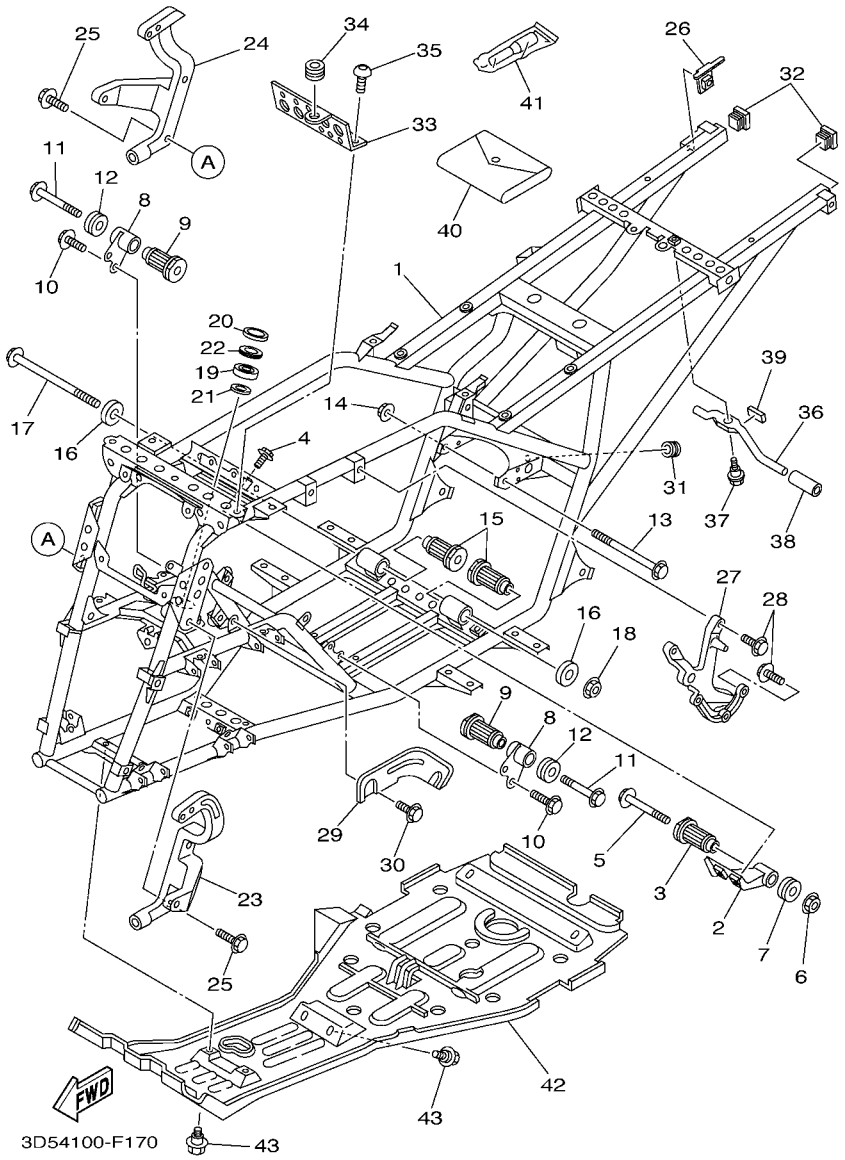

FIG. 17 FRAME

REF. NO.	PART NO.	DESCRIPTION	USA					REMARKS
28	95822–08020	BOLT, FLANGE	5					
29	5UH–F2825–00	PROTECTOR 1	1					
30	95812–06010	BOLT, FLANGE	2					
31	90480–10517	GROMMET	1					
32	5FU–F111A–00	CAP, MAIN PIPE	2					
33	3C2–F1228–00	BRACKET, RESERVE TANK	1					
34	90480–13004	GROMMET	1					
35	90149–06280	SCREW	2					
36	3C2–K7173–00	LEVER, LATCH 1	1					
37	90109–06172	BOLT	1					
38	JJ3–K818M–00	CAP, PROTECTOR END 4	1					
39	3C2–F4144–00	HOLDER, DAMPER	1					
40	5ND–F8100–00	TOOL KIT	1					
41	1NV–2811A–01	GAUGE, AIR	1					
42	5ND–F147A–02	GUARD, ENGINE 1	1					
43	90109–06172	BOLT	8					

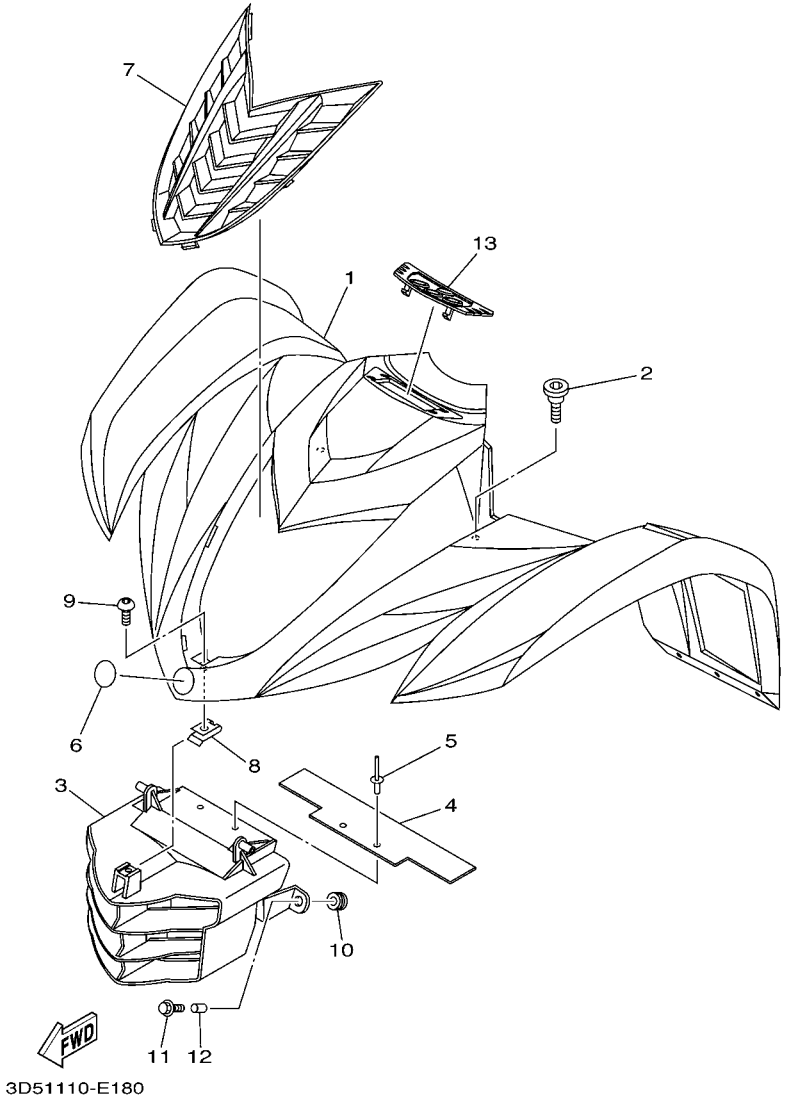

FIG. 18 FRONT FENDER

REF. NO.	PART NO.	DESCRIPTION	USA					REMARKS
1	3C2–F1500–90	FRONT FENDER ASSY	1					
2	90109–08076	BOLT	2					
3	3C2–F8309–00	GRILLE, FRONT	1					
4	3D5–F4131–00	DEFLECTOR 1	1					
5	90269–08813	RIVET	2					
6	3C2–F836B–00	TUNING FORK MARK	1					
7	3C2–F1556–A0	FENDER, FRONT 2	1					
8	90183–050A8	NUT, SPRING	1					
9	90110–05201	BOLT, HEXAGON SOCKET HEAD	1					
10	90480–15235	GROMMET	2					
11	95802–06025	BOLT, FLANGE	2					
12	90387–072Y2	COLLAR	2					
13	3D5–F837L–00	PANEL, CONSOLE 1	1					

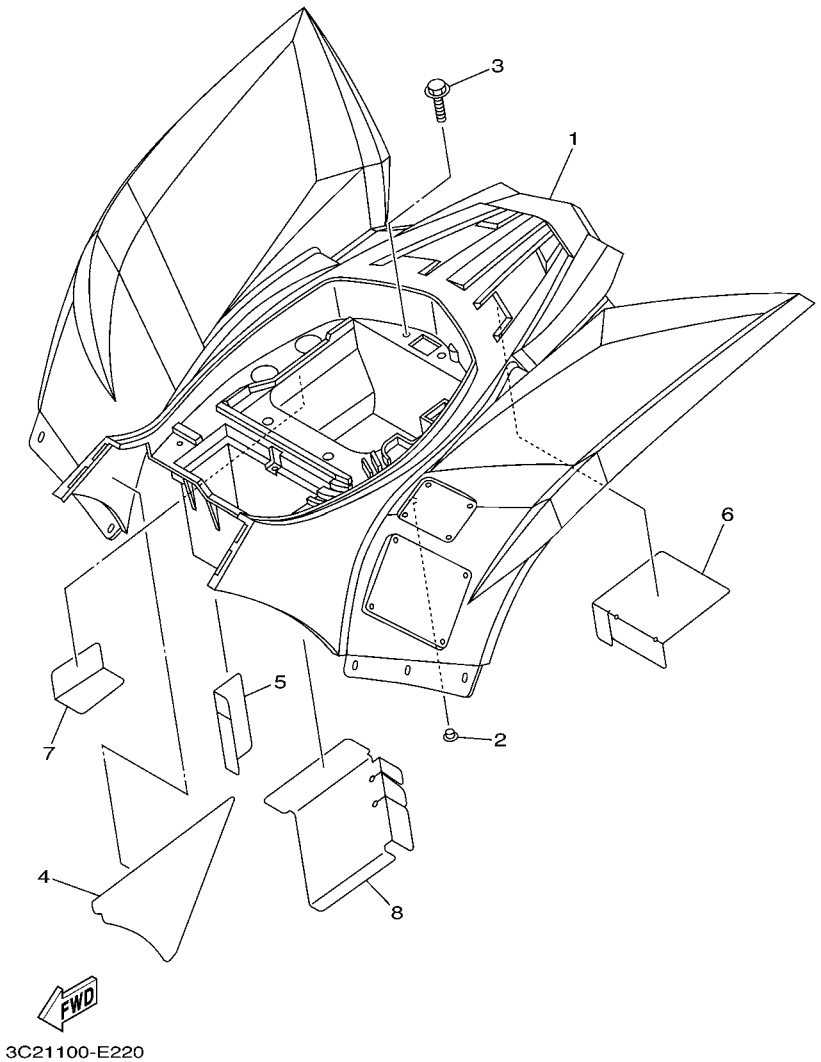

FIG. 19 REAR FENDER

REF. NO.	PART NO.	DESCRIPTION	USA					REMARKS
1	3D5–F1600–70	REAR FENDER ASSY.	1					
2	90338–09801	PLUG	2					
3	90119–06157	BOLT, WITH WASHER	1					
4	3C2–F163A–00	COVER, REAR FENDER 1	1					
5	5ND–F163E–00	COVER, REAR FENDER 2	1					
6	5ND–F1652–00	PROTECTOR	1					
7	5FU–F174A–02	INSULATOR, SIDE COVER	1					
8	5ND–F163F–00	COVER, REAR FENDER 3	1					

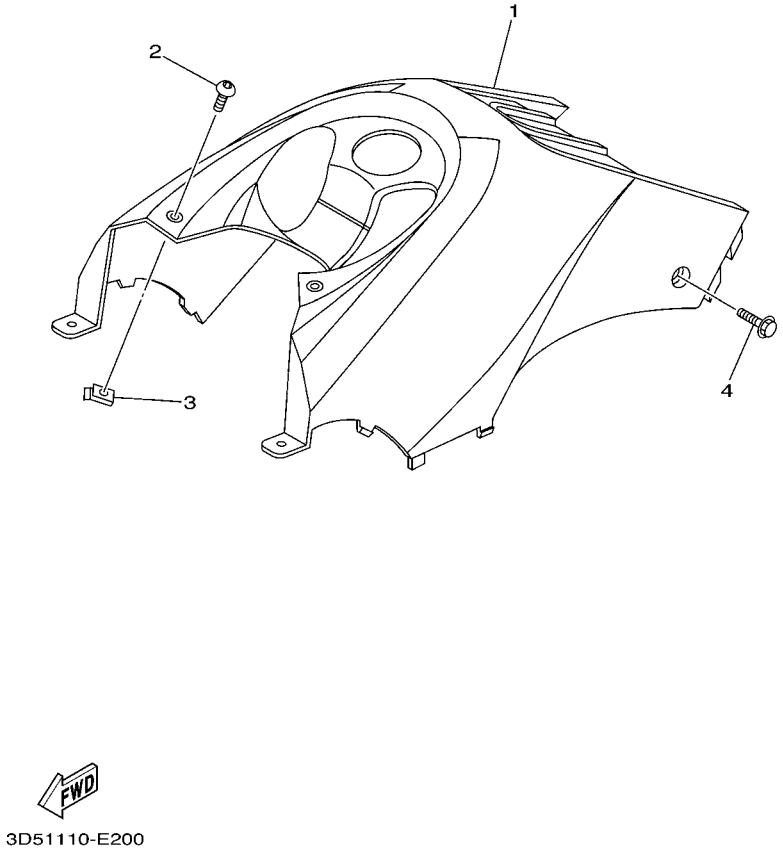

FIG. 20 SIDE COVER

REF. NO.	PART NO.	DESCRIPTION	USA					REMARKS
1	3C2–F171A–30	COVER, TOP	1					
2	90110–05201	BOLT, HEXAGON SOCKET HEAD	2					
3	90183–050A8	NUT, SPRING	2					
4	90110–06007	BOLT, HEXAGON SOCKET HEAD	2					

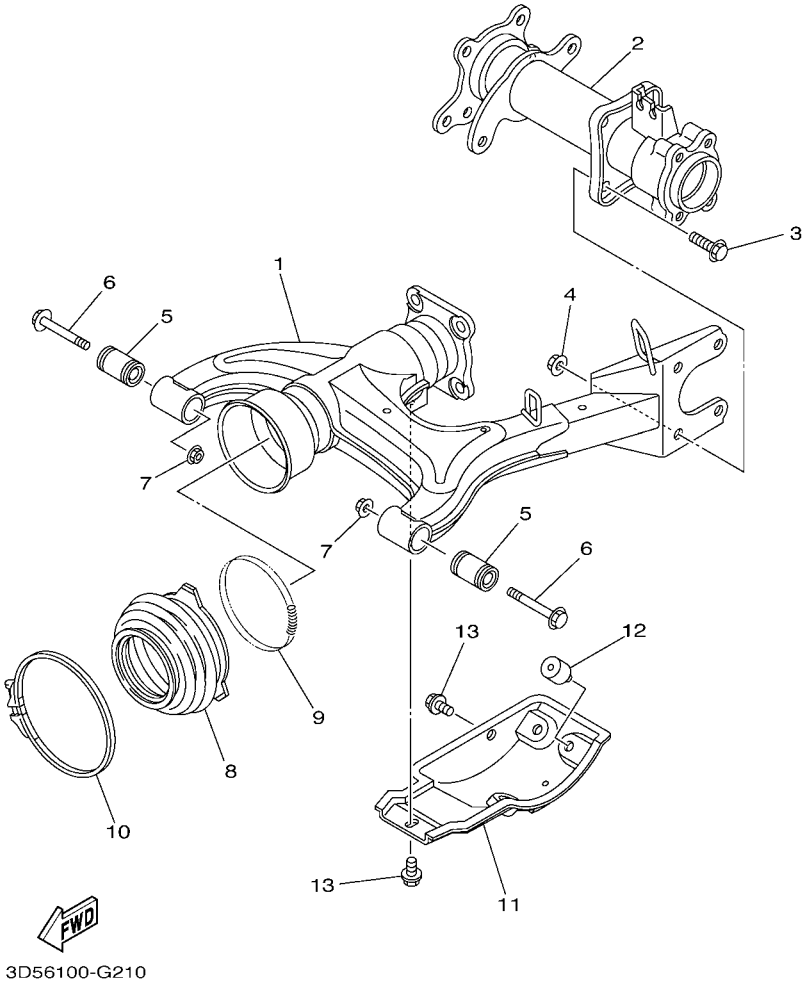

FIG. 21 REAR ARM

REF. NO.	PART NO.	DESCRIPTION	USA					REMARKS
1	3C2–F2110–00	REAR ARM COMP.	1					
2	5TE–G6540–12	REAR AXLE HOUSING COMP.	1					
3	95812–10020	BOLT, FLANGE	4					
4	95702–10500	NUT, WITH WASHER	4					
5	5ND–F2123–00	BUSH 1	2					
6	90105–12057	BOLT, FLANGE	2					
7	95602–12200	NUT, SELF-LOCKING	2					
8	5ND–F2189–00	BOOT, RUBBER	1					
9	90506–07135	SPRING, TENSION	1					
10	90460–85277	CLAMP, HOSE	1					
11	4XE–F219X–01	COVER	1					
12	109–27114–00	STOPPER, MAIN STAND	3					
13	95802–08012	BOLT, FLANGE	2					

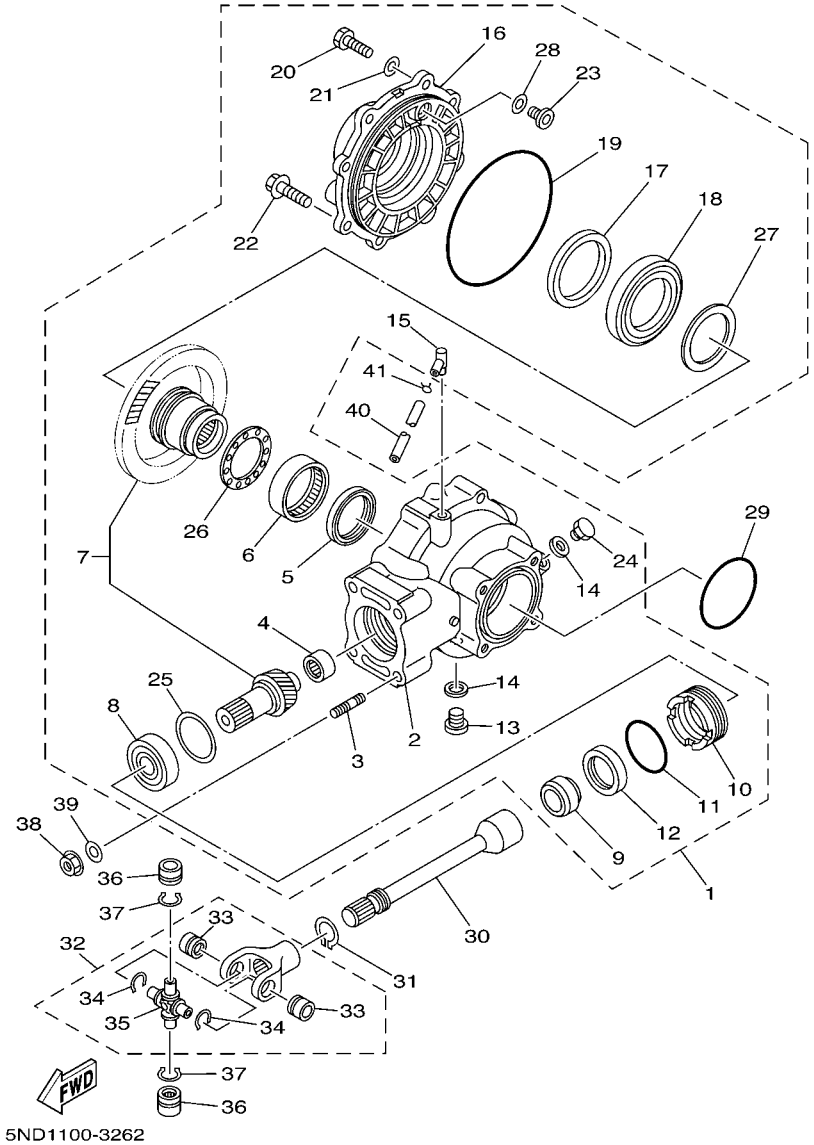

FIG. 22 DRIVE SHAFT

REF. NO.	PART NO.	DESCRIPTION	USA					REMARKS
1	5ND–G6101–03	REAR AXLE GEAR CASE ASSY	1					
2	5ND–G6151–01	.HOUSING, DRIVE SHAFT	1					
3	90116–10593	.BOLT, STUD	4					
4	4XE–G6102–00	.BEARING ASSY	1					
5	93101–52116	.OIL SEAL	1					
6	93317–855Y9	.BEARING	1					
7	5GT–Y4612–00	.RING GEAR SET	1					
8	93306–305Y6	.BEARING	1					
9	90387–255H9	.COLLAR	1					
10	29U–46125–00	.RETAINER, BEARING	1					
11	93210–59531	.O-RING	1					
12	93101–38098	.OIL SEAL	1					
13	90340–14046	.PLUG, STRAIGHT SCREW	1					
14	214–11198–01	.GASKET	2					
15	2N4–15371–00	.BREATHER	1					
16	5ND–G6152–00	.HOUSING, BEARING	1					
17	93102–65386	.OIL SEAL	1					
18	93316–013Y0	.BEARING	1					
19	93211–51749	.O-RING	1					
20	97022–08025	.BOLT	6					
21	92902–08600	.WASHER, PLATE	6					
22	95812–10025	.BOLT, FLANGE	2					
23	5FU–G6156–00	.STOPPER, RING GEAR	1					
24	90340–14029	.PLUG, STRAIGHT SCREW	1					
25	4XE–E7537–15	.SHIM, THRUST(T=0.15MM)	1					UR
	4XE–E7537–30	.SHIM, THRUST(T=0.30MM)	1					UR
	4XE–E7537–40	.SHIM, THRUST(T=0.40MM)	1					UR

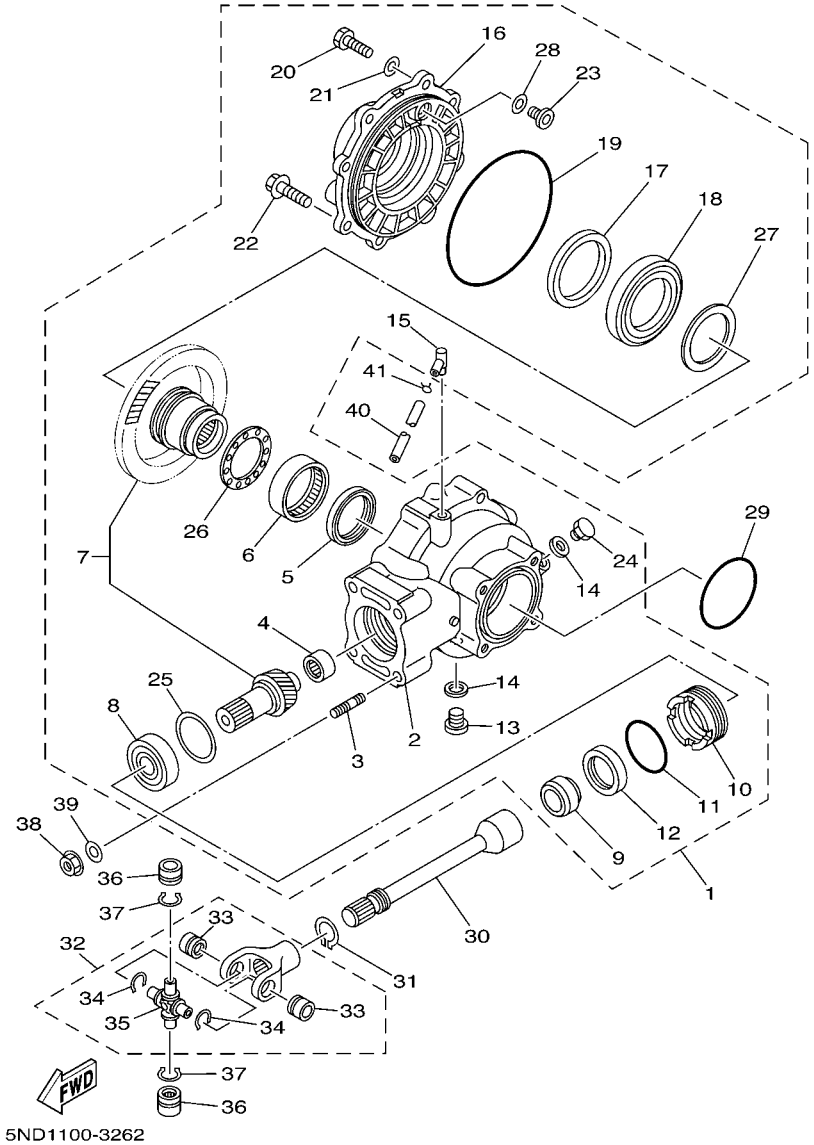

FIG. 22 DRIVE SHAFT

REF. NO.	PART NO.	DESCRIPTION	USA					REMARKS
25	4XE–E7537–45	.SHIM, THRUST(T=0.45MM)	1					UR
	4XE–E7537–50	.SHIM, THRUST(T=0.50MM)	1					UR
	4XE–E7537–60	.SHIM, THRUST(T=0.60MM)	1					UR
26	4XE–G6118–10	.SHIM, THRUST(T=1.0MM)	1					UR
	4XE–G6118–11	.SHIM, THRUST(T=1.1MM)	1					UR
	4XE–G6118–12	.SHIM, THRUST(T=1.2MM)	1					UR
	4XE–G6118–13	.SHIM, THRUST(T=1.3MM)	1					UR
	4XE–G6118–14	.SHIM, THRUST(T=1.4MM)	1					UR
	4XE–G6118–15	.SHIM, THRUST(T=1.5MM)	1					UR
	4XE–G6118–16	.SHIM, THRUST(T=1.6MM)	1					UR
	4XE–G6118–17	.SHIM, THRUST(T=1.7MM)	1					UR
	4XE–G6118–18	.SHIM, THRUST(T=1.8MM)	1					UR
	4XE–G6118–19	.SHIM, THRUST(T=1.9MM)	1					UR
	4XE–G6118–20	.SHIM, THRUST(T=2.0MM)	1					UR
	4XE–G6118–21	.SHIM, THRUST(T=2.1MM)	1					UR
27	4XE–G6117–25	.SHIM, RING GEAR(T=0.25MM)	1					UR
	4XE–G6117–30	.SHIM, RING GEAR(T=0.30MM)	1					UR
	4XE–G6117–35	.SHIM, RING GEAR(T=0.35MM)	1					UR
	4XE–G6117–40	.SHIM, RING GEAR(T=0.40MM)	1					UR
	4XE–G6117–45	.SHIM, RING GEAR(T=0.45MM)	1					UR
	4XE–G6117–50	.SHIM, RING GEAR(T=0.50MM)	1					UR
28	5FU–G6157–10	.SHIM, RING GEAR(T=0.10MM)	1					UR
	5FU–G6157–15	.SHIM, RING GEAR(T=0.15MM)	1					UR
	5FU–G6157–20	.SHIM, RING GEAR(T=0.20MM)	1					UR
	5FU–G6157–30	.SHIM, RING GEAR(T=0.30MM)	1					UR
	5FU–G6157–40	.SHIM, RING GEAR(T=0.40MM)	1					UR
	5FU–G6157–50	.SHIM, RING GEAR(T=0.50MM)	1					UR

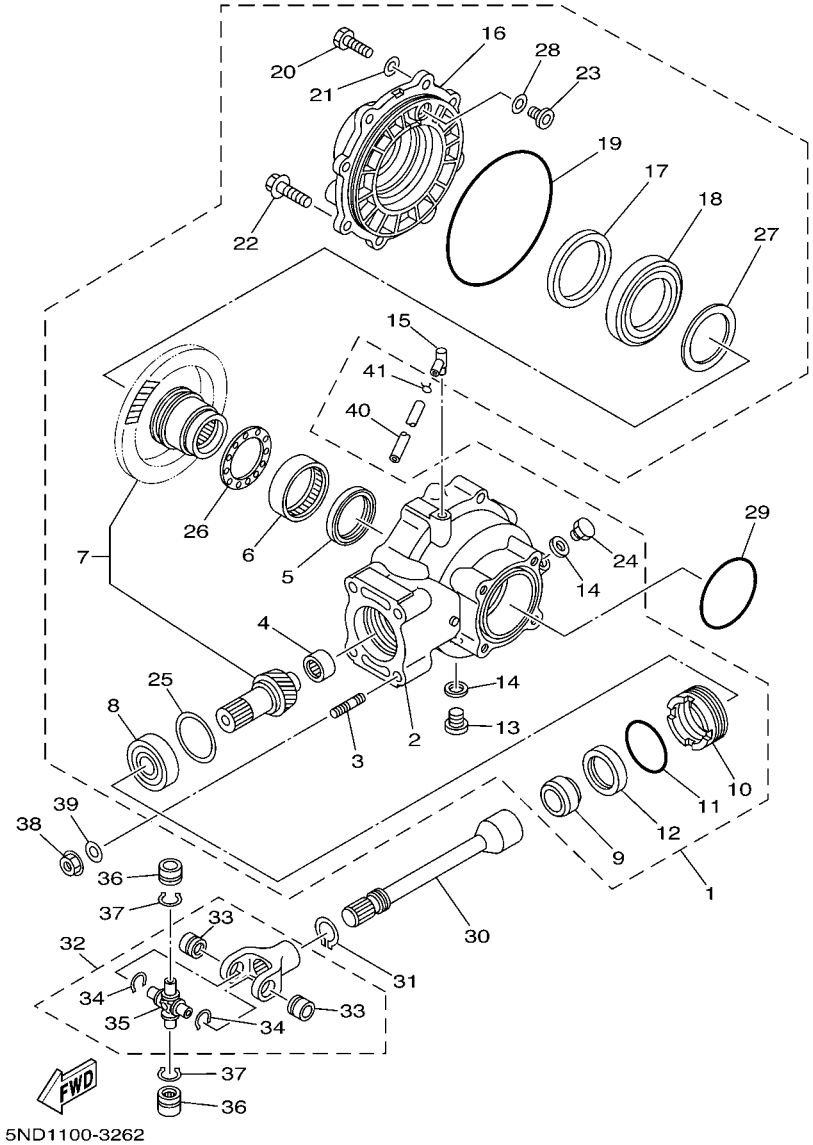

FIG. 22 DRIVE SHAFT

REF. NO.	PART NO.	DESCRIPTION	USA					REMARKS
29	93210–76800	O-RING	1					
30	5ND–G6172–10	SHAFT, DRIVE	1					
31	93410–22039	CIRCLIP	1					
32	3HN–46108–01	CROSS JOINT COMP. 3	1					
33	93399–99926	.BEARING	2					
34	93440–20088	.CIRCLIP	2					
35	2HR–46187–00	.SPIDER	1					
36	93399–99926	BEARING	2					
37	93440–20088	CIRCLIP	2					
38	95702–10500	NUT, WITH WASHER	4					
39	90201–10036	WASHER, PLATE	4					
40	90445–07810	HOSE (L1050)	1					
41	90467–07029	CLIP	1					

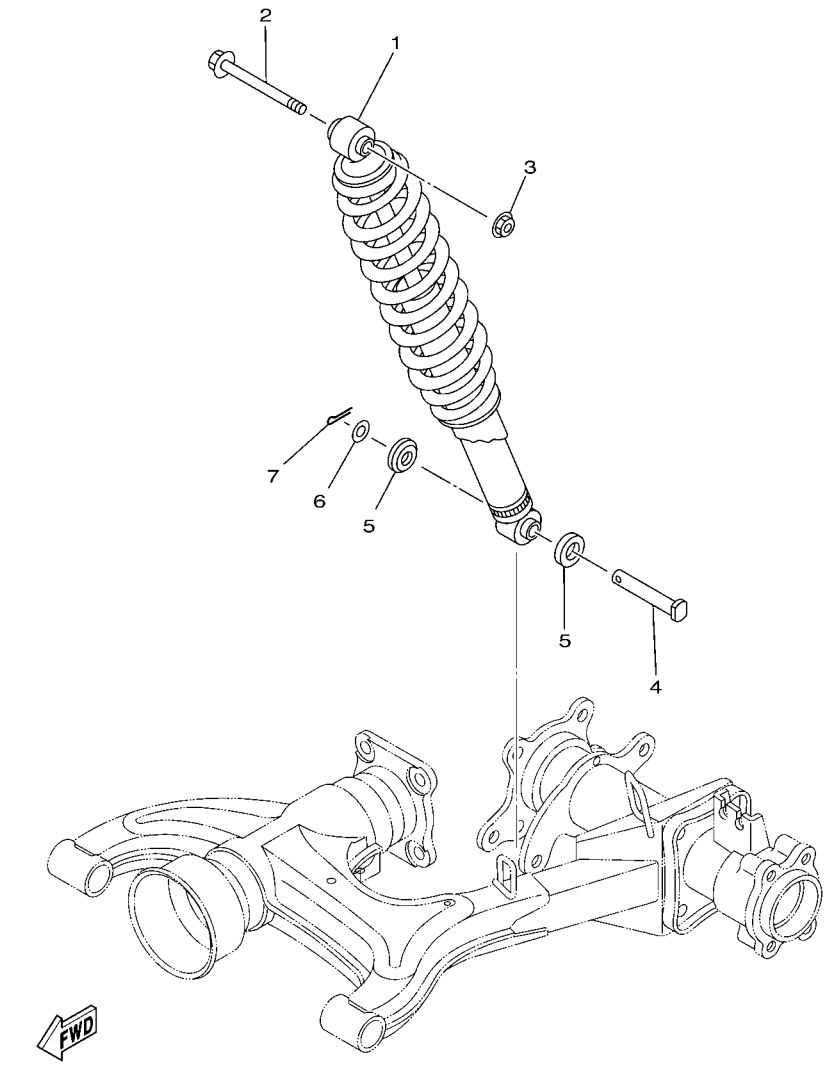

5TE1100-B280

FIG. 23 REAR SUSPENSION

REF. NO.	PART NO.	DESCRIPTION	USA					REMARKS
1	3D5–F2210–00	SHOCK ABSORBER ASSY, REAR	1					
2	90105–12803	BOLT, FLANGE	1					
3	90185–12009	NUT, SELF-LOCKING	1					
4	90240–12092	PIN, CLEVIS	1					
5	1W1–22128–00	COVER, THRUST 1	2					
6	90201–12049	WASHER, PLATE	1					
7	91402–30025	PIN, COTTER	1					

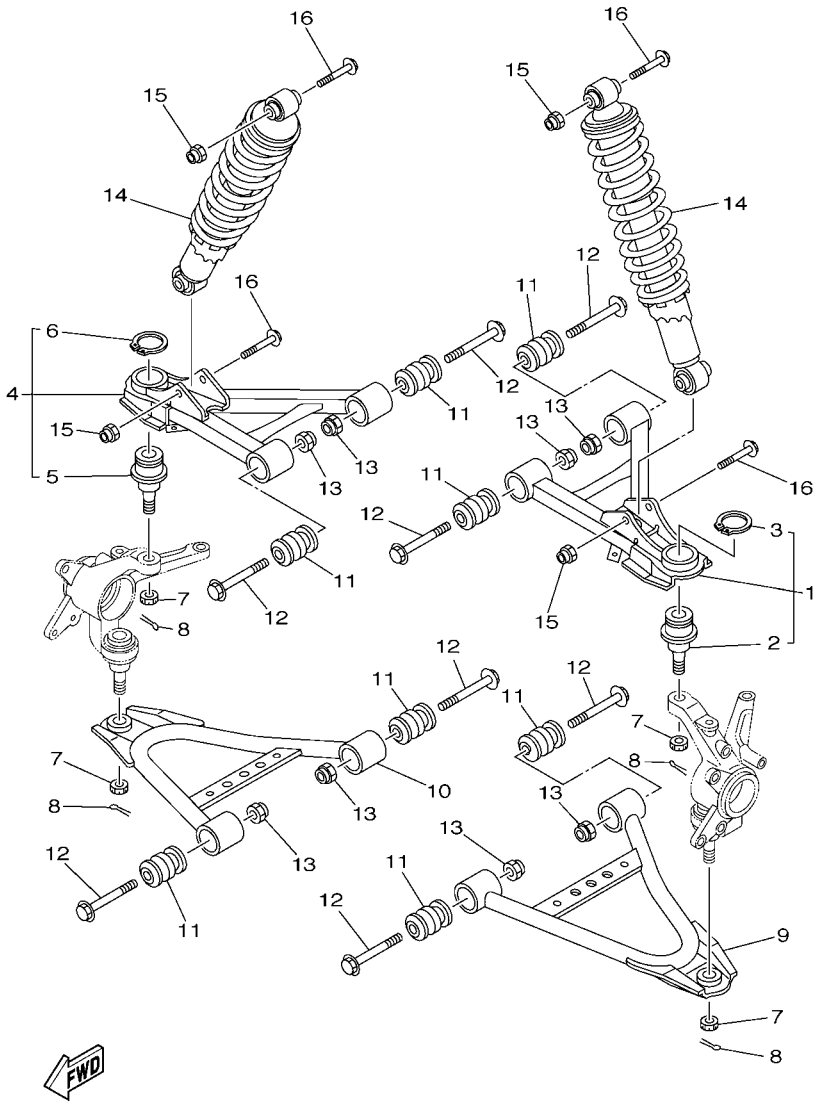

5VH5110-C280

FIG. 24 FRONT SUSPENSION & WHEEL

REF. NO.	PART NO.	DESCRIPTION	USA					REMARKS
1	5ND–F3540–12	FRONT UPPER ARM COMP. (LEFT)	1					
2	5FU–F3549–00	.BALL JOINT 1	1					
3	93410–32826	.CIRCLIP	1					
4	5ND–F3550–12	FRONT UPPER ARM COMP. (RIGHT)	1					
5	5FU–F3549–00	.BALL JOINT 1	1					
6	93410–32826	.CIRCLIP	1					
7	90171–12001	NUT, CASTLE	4					
8	91402–25020	PIN, COTTER	4					
9	5ND–F357A–01	ARM,FR. LWR. LH.	1					
10	5ND–F358A–01	ARM,FR. LWR. RH.	1					
11	2HR–23526–00	BUSH	8					
12	90105–10267	BOLT, FLANGE	8					
13	90185–10012	NUT, SELF-LOCKING	8					
14	3D5–F3350–00	SHOCK ABSORBER ASSY	2					
15	90185–10012	NUT, SELF-LOCKING	4					
16	90105–10841	BOLT, FLANGE	4					

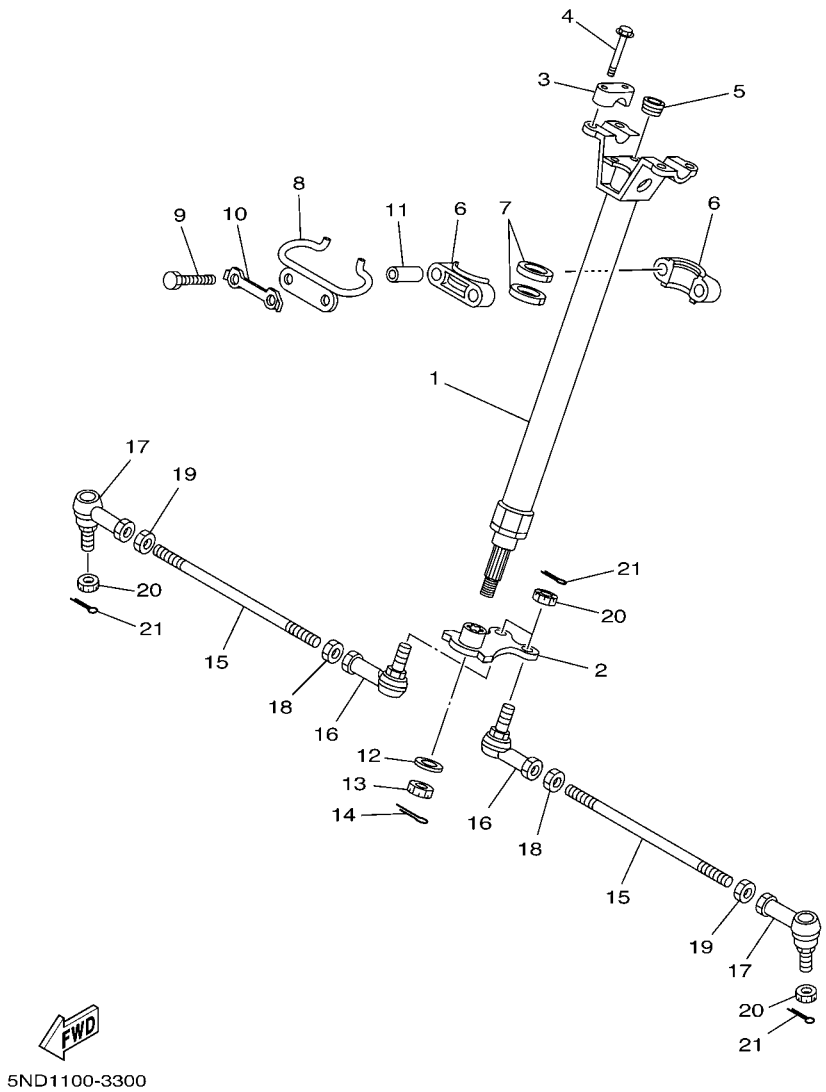

FIG. 25 STEERING

REF. NO.	PART NO.	DESCRIPTION	USA					REMARKS
1	3C2–F3813–00	COLUMN, STEERING 2	1					
2	5ND–F3816–12	ARM, PITMAN	1					
3	8K1–23814–00	HOLDER, HANDLE	2					
4	95812–08030	BOLT, FLANGE	4					
5	90336–28053	PLUG, TAPER	1					
6	1UY–23812–00	PLANE BEARING, STEERING	2					
7	93112–31011	OIL SEAL	2					
8	5ND–F3868–00	BRACKET, STEERING LOWER	1					
9	97022–08060	BOLT	2					
10	1UY–23894–01	WASHER, LOCK 1	1					
11	90387–090R0	COLLAR	2					
12	90201–14021	WASHER, PLATE	1					
13	90185–14009	NUT, SELF-LOCKING	1					
14	91402–20025	PIN, COTTER	1					
15	5ND–F3831–00	ROD, TIE	2					
16	1D9–F3841–01	JOINT, UNIVERSAL 1	2					
17	5ND–F3845–01	JOINT, UNIVERSAL 2	2					
18	4XE–F3833–00	NUT 1	2					
19	4XE–F3834–00	NUT 2	2					
20	90171–12001	NUT, CASTLE	4					
21	91402–25020	PIN, COTTER	4					

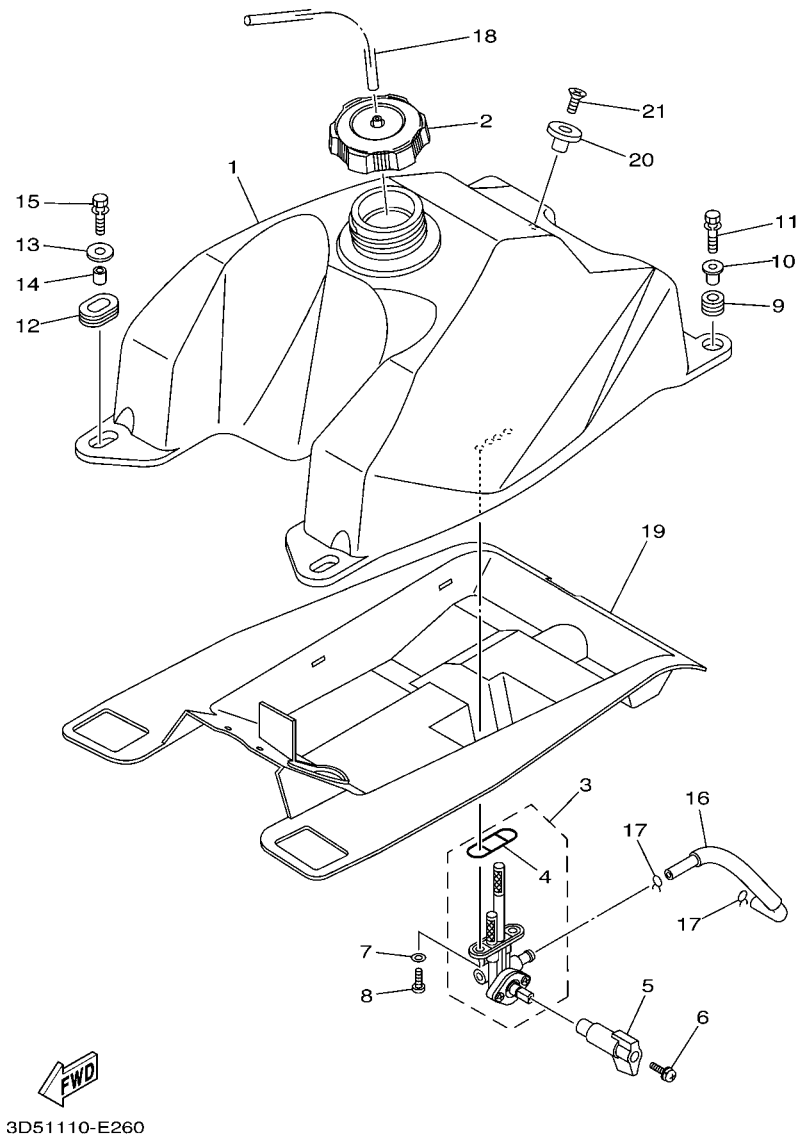

FIG. 26 FUEL TANK

REF. NO.	PART NO.	DESCRIPTION	USA					REMARKS
1	3C2–F4110–10	FUEL TANK COMP.	1					
2	5KM–24610–00	CAP ASSY	1					
3	3D5–24500–00	FUEL COCK ASSY 1	1					
4	1P6–24512–00	.O-RING	1					
5	3D5–24524–00	LEVER, COCK	1					
6	3D5–24535–00	SCREW, LEVER FITTING	1					
7	90202–05193	WASHER, PLATE	2					
8	90149–06108	SCREW	2					
9	90480–18290	GROMMET	2					
10	90387–066J1	COLLAR	2					
11	90119–06883	BOLT, WITH WASHER	2					
12	90480–01400	GROMMET	2					
13	90201–06090	WASHER, PLATE	2					
14	90387–07598	COLLAR	2					
15	90119–06883	BOLT, WITH WASHER	2					
16	5UH–24311–00	PIPE, FUEL 1	1					
17	90467–100A1	CLIP	2					
18	90445–088C5	HOSE (L400)	1					
19	5UH–F414H–01	DAMPER, PLATE 1	1					
20	4EW–2412F–00	BRACKET, SEAT	1					
21	90151–06010	SCREW, COUNTERSUNK	1					

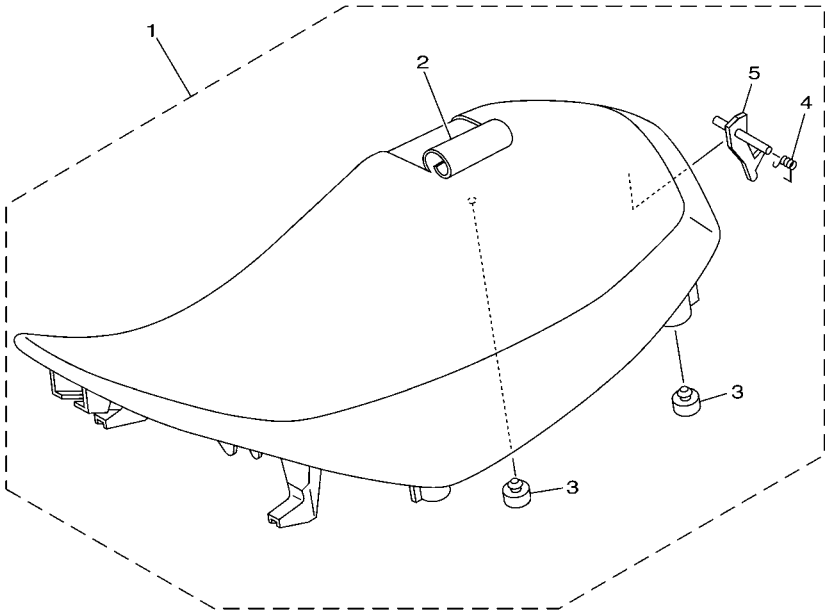

3C21100-E310

FIG. 27 SEAT

REF. NO.	PART NO.	DESCRIPTION	USA					REMARKS
1	3C2–F4710–00	SINGLE SEAT ASSY	1					
2	3C2–F4731–00	.COVER, SEAT	1					
3	4XE–F4747–00	.DAMPER, SEAT	2					
4	4XE–F478V–00	.SPRING, TORSION	1					
5	3C2–F4776–00	.LEVER, SEAT	1					

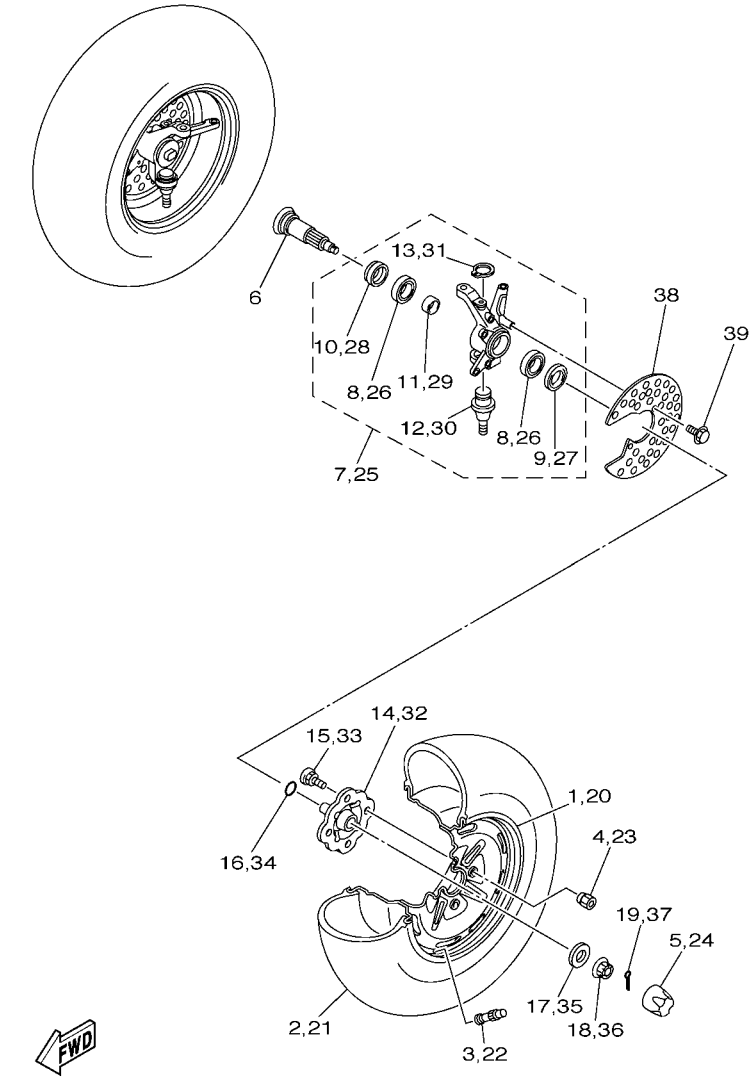

5VH1100-B320

FIG. 28 FRONT WHEEL

REF. NO.	PART NO.	DESCRIPTION	USA					REMARKS
1	5ND–F5180–11	WHEEL COMP.	1					
2	94108–12808	TIRE (AT23X8-12)	1					CHENG SHIN
3	93900–00813	VALVE, RIM (TR413)	1					CHENG SHIN
4	90179–10022	NUT	4					
5	5GT–2512A–00	CAP, WHEEL	1					
6	5HA–25181–00	AXLE, WHEEL	2					
7	5ND–F3501–10	STEERING KNUCKLE ASSY (LEFT)	1					
8	93306–006Y2	.BEARING	2					
9	93106–38046	.OIL SEAL	1					
10	93106–38047	.OIL SEAL	1					
11	90560–30325	.SPACER	1					
12	5FU–F3549–00	.BALL JOINT 1	1					
13	99009–32400	.CIRCLIP	1					
14	5ND–F5111–21	HUB, FRONT	1					
15	90114–10014	BOLT, SERRATION	4					
16	93210–27666	O-RING	1					
17	90201–16804	WASHER, PLATE	1					
18	90171–16002	NUT, CASTLE	1					
19	91402–30030	PIN, COTTER	1					
20	5ND–F5180–11	WHEEL COMP.	1					
21	94108–12808	TIRE (AT23X8-12)	1					CHENG SHIN
22	93900–00813	VALVE, RIM (TR413)	1					CHENG SHIN
23	90179–10022	NUT	4					
24	5GT–2512A–00	CAP, WHEEL	1					
25	5ND–F3502–10	STEERING KNUCKLE ASSY (RIGHT)	1					
26	93306–006Y2	.BEARING	2					
27	93106–38046	.OIL SEAL	1					

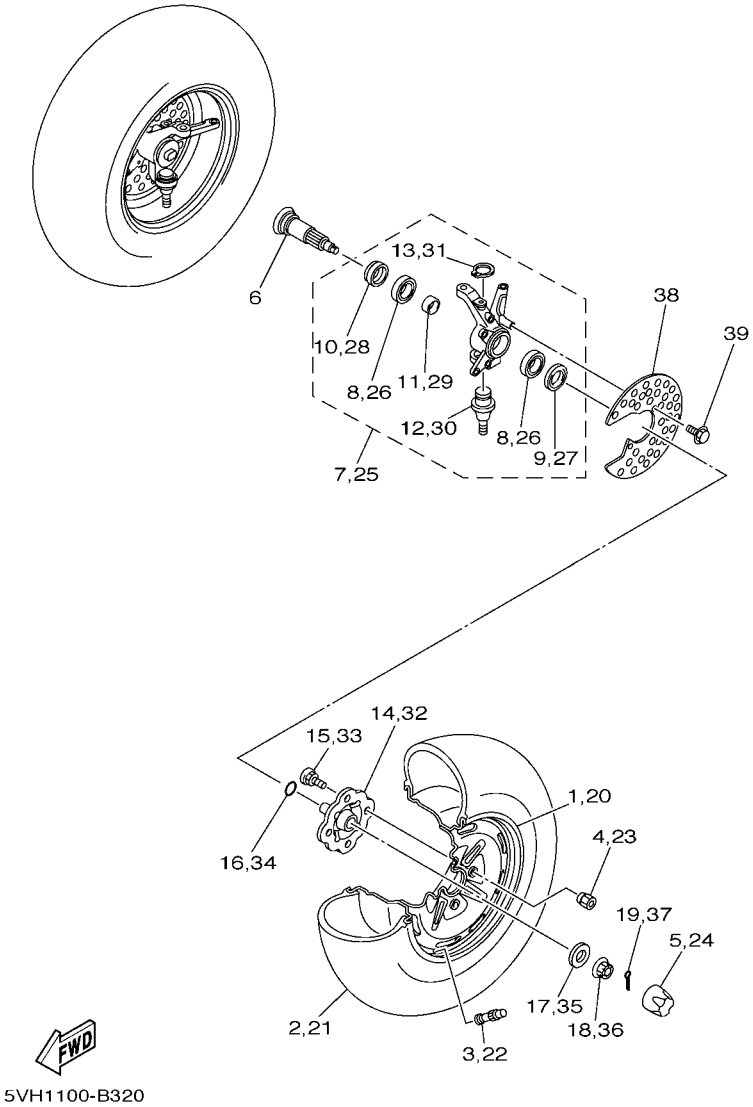

FIG. 28 FRONT WHEEL

REF. NO.	PART NO.	DESCRIPTION	USA					REMARKS
28	93106–38047	.OIL SEAL	1					
29	90560–30325	.SPACER	1					
30	5FU–F3549–00	.BALL JOINT 1	1					
31	99009–32400	.CIRCLIP	1					
32	5ND–F5111–21	HUB, FRONT	1					
33	90114–10014	BOLT, SERRATION	4					
34	93210–27666	O-RING	1					
35	90201–16804	WASHER, PLATE	1					
36	90171–16002	NUT, CASTLE	1					
37	91402–30030	PIN, COTTER	1					
38	5ND–F514A–00	RING, WHEEL 1	2					
39	95822–06012	BOLT, FLANGE	4					

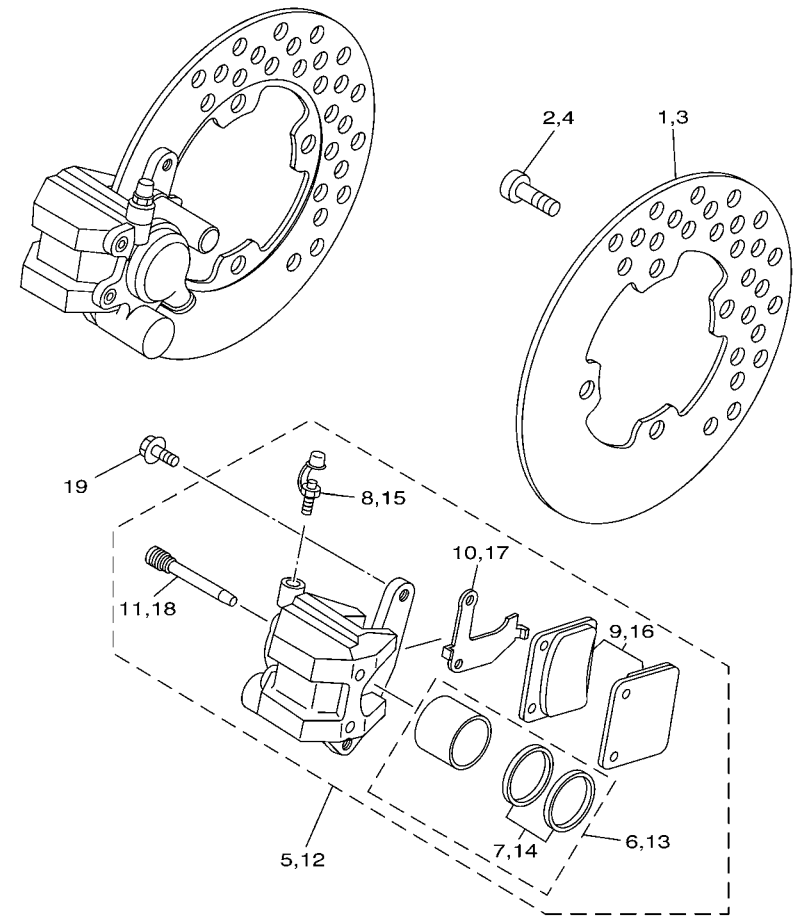

5ND1100-3340

FIG. 29 FRONT BRAKE CALIPER

REF. NO.	PART NO.	DESCRIPTION	USA					REMARKS
1	5ND–F582T–00	DISC, BRAKE (LEFT)	1					
2	90109–08082	BOLT	4					
3	5ND–F582T–00	DISC, BRAKE (LEFT)	1					
4	90109–08082	BOLT	4					
5	3GD–2580T–00	CALIPER ASSY (LEFT)	1					
6	3GD–W0057–00	.PISTON ASSY, CALIPER	1					
7	3GD–W0047–00	..CALIPER SEAL KIT	1					
8	1UY–W0048–50	.BLEED SCREW KIT	1					
9	3GD–W0045–00	.BRAKE PAD KIT	1					
10	3GD–25827–00	.SHIM, CALIPER	1					
11	3GD–25933–00	.PIN, PAD	2					
12	3GD–2580U–00	CALIPER ASSY (RIGHT)	1					
13	3GD–W0057–00	.PISTON ASSY, CALIPER	1					
14	3GD–W0047–00	..CALIPER SEAL KIT	1					
15	1UY–W0048–50	.BLEED SCREW KIT	1					
16	3GD–W0045–00	.BRAKE PAD KIT	1					
17	3GD–25828–00	.SHIM, CALIPER	1					
18	3GD–25933–00	.PIN, PAD	2					
19	90105–08161	BOLT, FLANGE	4					

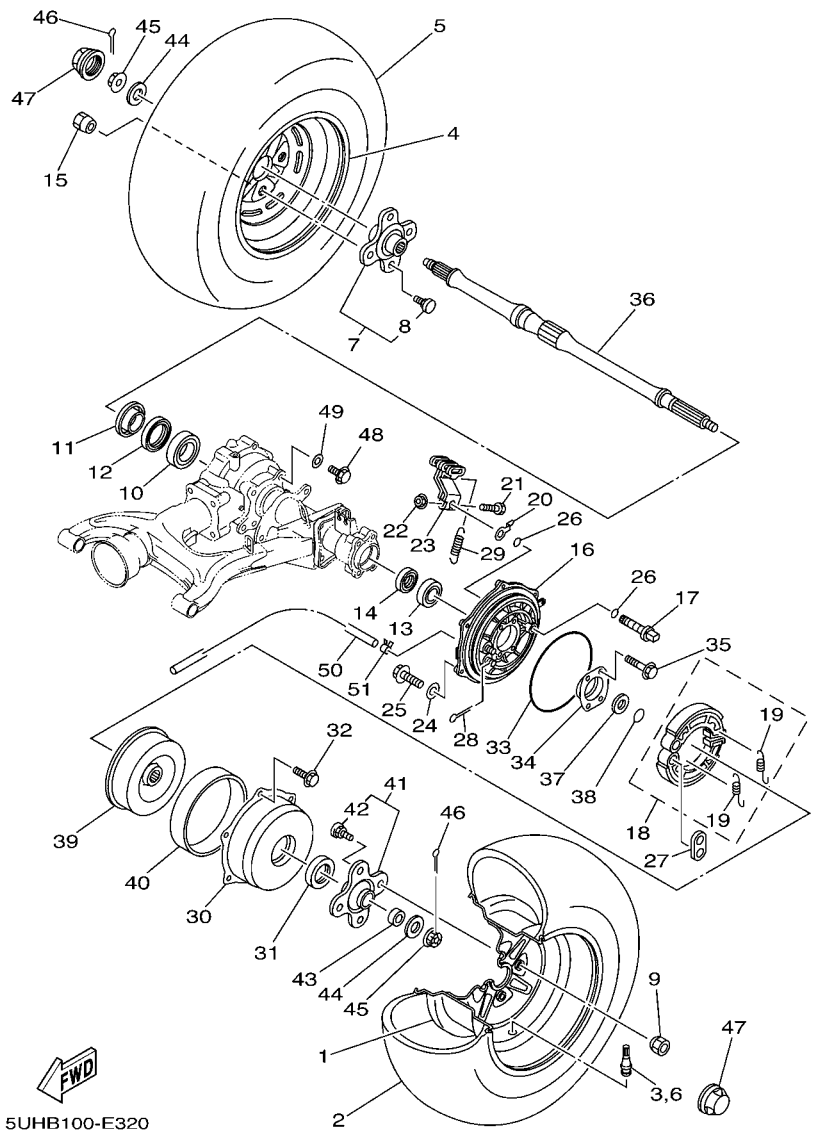

FIG. 30 REAR WHEEL

REF. NO.	PART NO.	DESCRIPTION	USA					REMARKS
1	5ND–F5390–11	REAR WHEEL COMP.	1					
2	94110–12804	TIRE (AT23X10-12)	1					CHENG SHIN
3	93900–00813	VALVE, RIM (TR413)	1					CHENG SHIN
4	5ND–F5390–11	REAR WHEEL COMP.	1					
5	94110–12804	TIRE (AT23X10-12)	1					CHENG SHIN
6	93900–00813	VALVE, RIM (TR413)	1					CHENG SHIN
7	5ND–F5383–11	COLLAR, WHEEL	1					
8	1P0–F5411–00	.BOLT	4					
9	90179–10022	NUT	4					
10	93306–008Y0	BEARING	1					
11	4SH–25367–01	COVER, HUB DUST	1					
12	93106–47040	OIL SEAL	1					
13	93306–278Y0	BEARING	1					
14	93101–35097	OIL SEAL	1					
15	90179–10022	NUT	4					
16	5VH–F5321–01	PLATE, BRAKE SHOE	1					
17	5VH–F5351–01	CAMSHAFT	1					
18	5VH–WF536–00	BRAKE SHOE SET	1					
19	5VH–F5333–00	.SPRING, RETURN	2					
20	5VH–F533A–01	PLATE, INDICATOR	1					
21	90101–06824	BOLT	1					
22	9560L–06200	NUT, SELF-LOCKING	1					
23	5VH–F5355–01	LEVER, CAMSHAFT	1					
24	5VH–F5898–00	GASKET	1					
25	5VH–F5818–00	BOLT, CALIPER	1					
26	5VH–F5359–00	SEAL, CAMSHAFT	2					
27	5VH–F539F–01	PLATE 1	1					

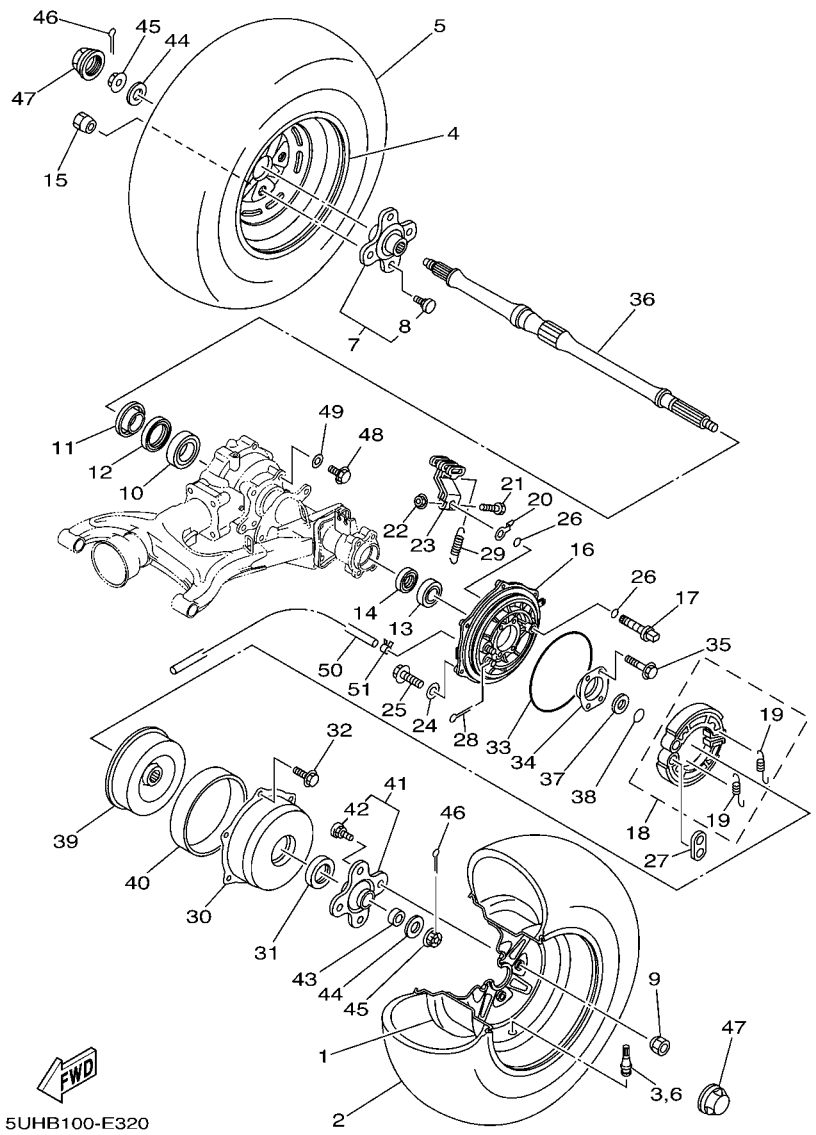

FIG. 30 REAR WHEEL

REF. NO.	PART NO.	DESCRIPTION	USA					REMARKS
28	91402–25020	PIN, COTTER	2					
29	90506–16482	SPRING, TENSION	1					
30	5FU–F5327–01	COVER, PLATE	1					
31	5FU–F5319–10	SEAL, HUB DUST	1					
32	95822–06012	BOLT, FLANGE	6					
33	5FU–F537Y–00	SEAL, DUST	1					
34	4XE–G6513–00	RETAINER	1					
35	90105–088A4	BOLT, FLANGE	4					
36	5TE–F5381–01	AXLE, WHEEL	1					
37	90387–284T0	COLLAR	1					
38	93210–26606	O-RING	1					
39	5FU–F531E–10	DRUM, BRAKE	1					
40	5FU–F5336–00	RING 2	1					
41	5FU–F5377–11	COLLAR, WHEEL	1					
42	1P0–F5411–00	.BOLT	4					
43	5FU–F5384–00	WASHER, WHEEL	1					
44	90201–16804	WASHER, PLATE	2					
45	90171–16002	NUT, CASTLE	2					
46	91402–30030	PIN, COTTER	2					
47	5GT–2512A–00	CAP, WHEEL	2					
48	90105–10287	BOLT, FLANGE	4					
49	90201–10035	WASHER, PLATE	4					
50	90445–07807	HOSE (L1150)	1					
51	90467–070A0	CLIP	1					

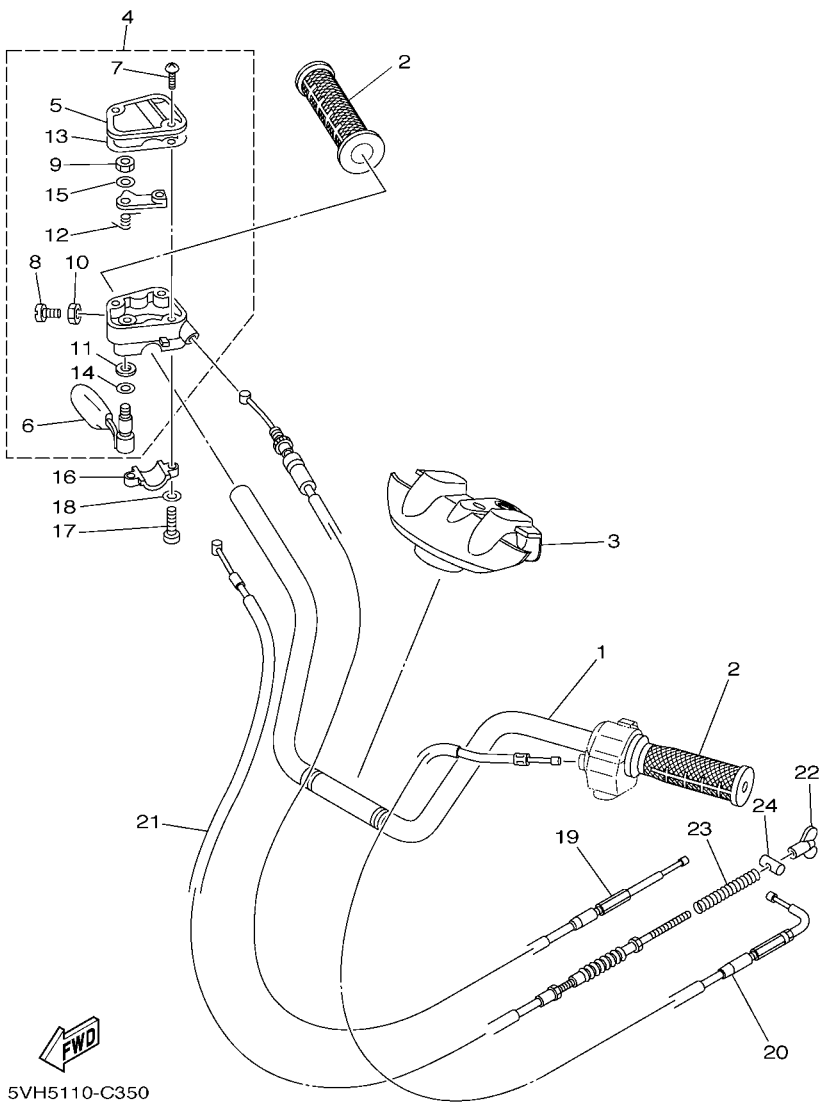

FIG. 31 STEERING HANDLE & CABLE

REF. NO.	PART NO.	DESCRIPTION	USA					REMARKS
1	3C2–F6111–00	HANDLEBAR	1					
2	5FU–F6241–10	GRIP	2					
3	5ND–F6124–00	PROTECTOR, HANDLEBAR	1					
4	4KB–26250–10	THROTTLE LEVER ASSY	1					
5	4KB–2628F–10	.CAP, GEAR	1					
6	1NV–2625G–01	.LEVER, THROTTLE	1					
7	90149–04278	.SCREW	3					
8	98507–05020	.SCREW, PAN HEAD	1					
9	95607–05100	.NUT, U	1					
10	95307–05700	.NUT	1					
11	93104–09025	.OIL SEAL	1					
12	1NV–26304–00	.SPRING	1					
13	4KB–2628G–00	.GASKET	1					
14	1NV–26129–00	.WASHER	1					
15	1NV–26398–00	.WASHER	1					
16	4V4–82913–00	HOLDER, LEVER LOWER 1	1					
17	98502–05020	SCREW, PAN HEAD	2					
18	92902–05600	WASHER, PLATE	2					
19	5GH–26311–10	CABLE, THROTTLE 1	1					
20	3C2–F6331–00	CABLE, STARTER 1	1					
21	3D5–26341–00	WIRE, BRAKE 1	1					
22	20E–26343–00	NUT, ADJUSTING	1					
23	90501–10782	SPRING, COMPRESSION	1					
24	90249–12008	PIN	1					

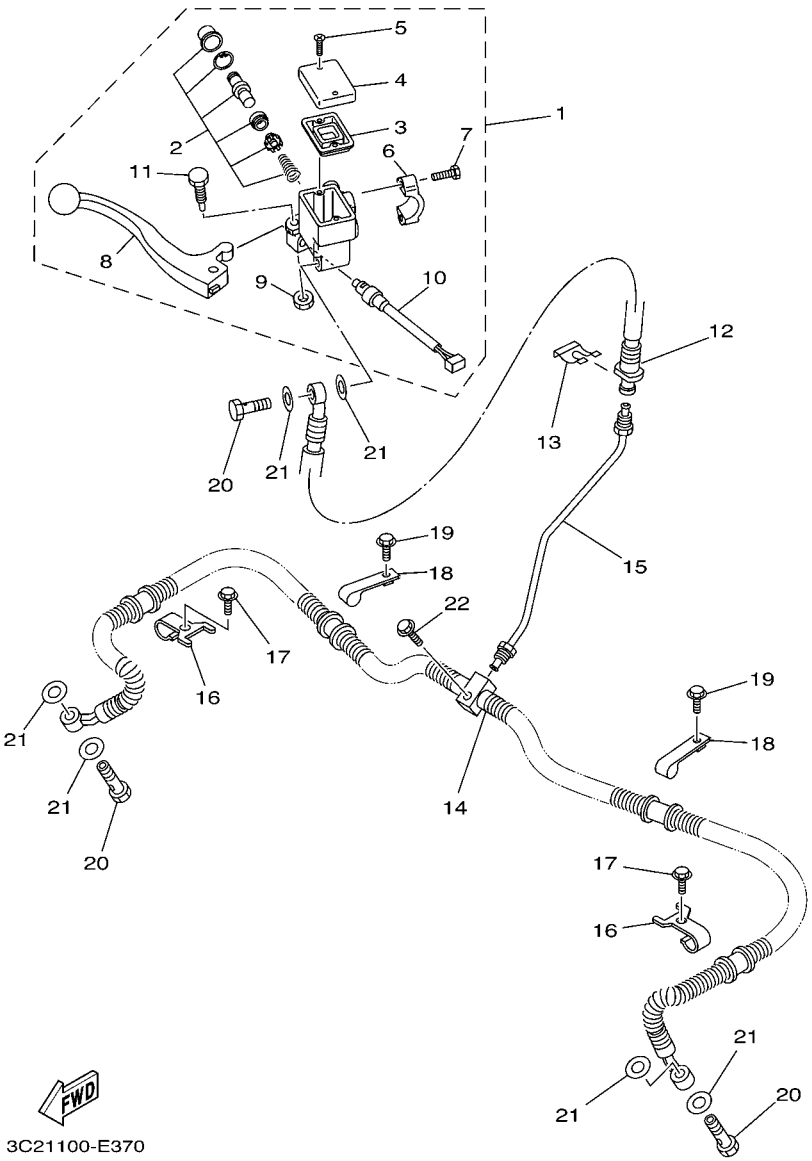

FIG. 32 FRONT MASTER CYLINDER

REF. NO.	PART NO.	DESCRIPTION	USA					REMARKS
1	5KM–2583T–01	MASTER CYLINDER ASSY	1					
2	8CR–W0041–00	.CYLINDER KIT, MASTER	1					
3	4L0–25854–00	.GASKET, DIAPHRAGM	1					
4	5JX–25852–01	.CAP, RESERVOIR	1					
5	98706–04012	.SCREW, FLAT HEAD	2					
6	5GH–25867–00	.HOLDER	1					
7	5EB–26332–00	.BOLT	2					
8	5KM–83922–00	.LEVER 2	1					
9	95606–06100	.NUT, U	1					
10	5LP–83980–00	.FRONT STOP SWITCH ASSY	1					
11	1FK–2589F–00	.BOLT, LEVER	1					
12	3C2–F5872–01	HOSE, BRAKE 1	1					
13	2GU–25866–00	CIRCLIP	1					
14	5ND–F5873–01	HOSE, BRAKE 2	1					
15	5ND–F5871–00	PIPE, BRAKE	1					
16	5ND–F5875–01	HOLDER, BRAKE HOSE 1	2					
17	95822–06012	BOLT, FLANGE	2					
18	5ND–F3192–01	BAND	2					
19	95822–06012	BOLT, FLANGE	2					
20	90401–10015	BOLT, UNION	3					
21	90201–10118	WASHER, PLATE	6					
22	95802–06025	BOLT, FLANGE	1					

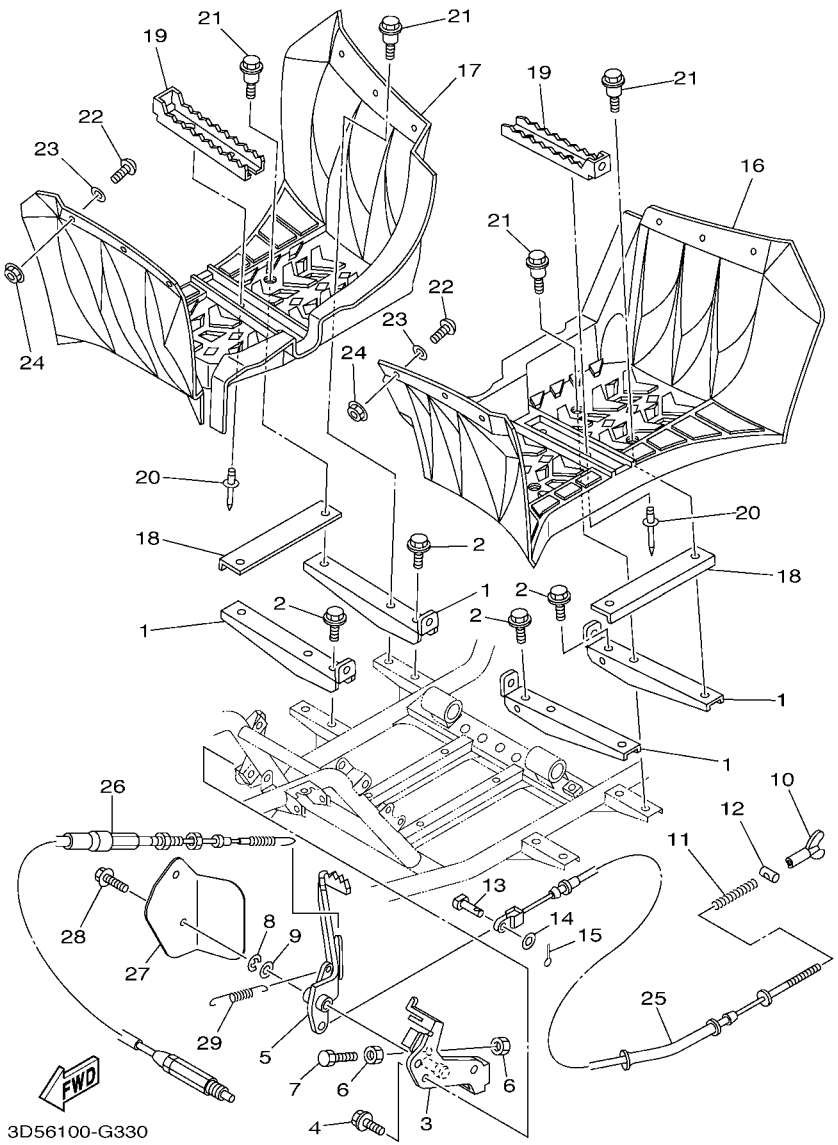

FIG. 33 STAND & FOOTREST

REF. NO.	PART NO.	DESCRIPTION	USA					REMARKS
1	3C2–F7471–00	BAR, FOOTREST 1	4					
2	95812–08012	BOLT, FLANGE	4					
3	5TE–F7412–11	BRACKET, FOOTREST 1	1					
4	95812–08012	BOLT, FLANGE	3					
5	5TE–F7211–00	PEDAL, BRAKE	1					
6	95312–06700	NUT	2					
7	97012–06020	BOLT	1					
8	93430–10015	CIRCLIP	1					
9	90201–14023	WASHER, PLATE	1					
10	20E–26343–00	NUT, ADJUSTING	1					
11	90501–10782	SPRING, COMPRESSION	1					
12	90249–12008	PIN	1					
13	90240–08005	PIN, CLEVIS	1					
14	90201–08066	WASHER, PLATE	1					
15	91402–20020	PIN, COTTER	1					
16	3C2–F7453–00	COVER 1	1					
17	3C2–F7463–00	COVER 2	1					
18	5ND–F7445–00	PLATE 1	2					
19	3C2–F741A–00	ARM 1	2					
20	90267–489U9	RIVET, BLIND	4					
21	90109–06262	BOLT	8					
22	90149–05299	SCREW	12					
23	90201–05042	WASHER, PLATE	12					
24	95702–05300	NUT, NYLON	12					
25	5TE–26361–00	CABLE, BRAKE	1					
26	5GH–2637F–10	CABLE, CONTROL 2	1					
27	5UH–F7491–01	PROTECTOR	1					

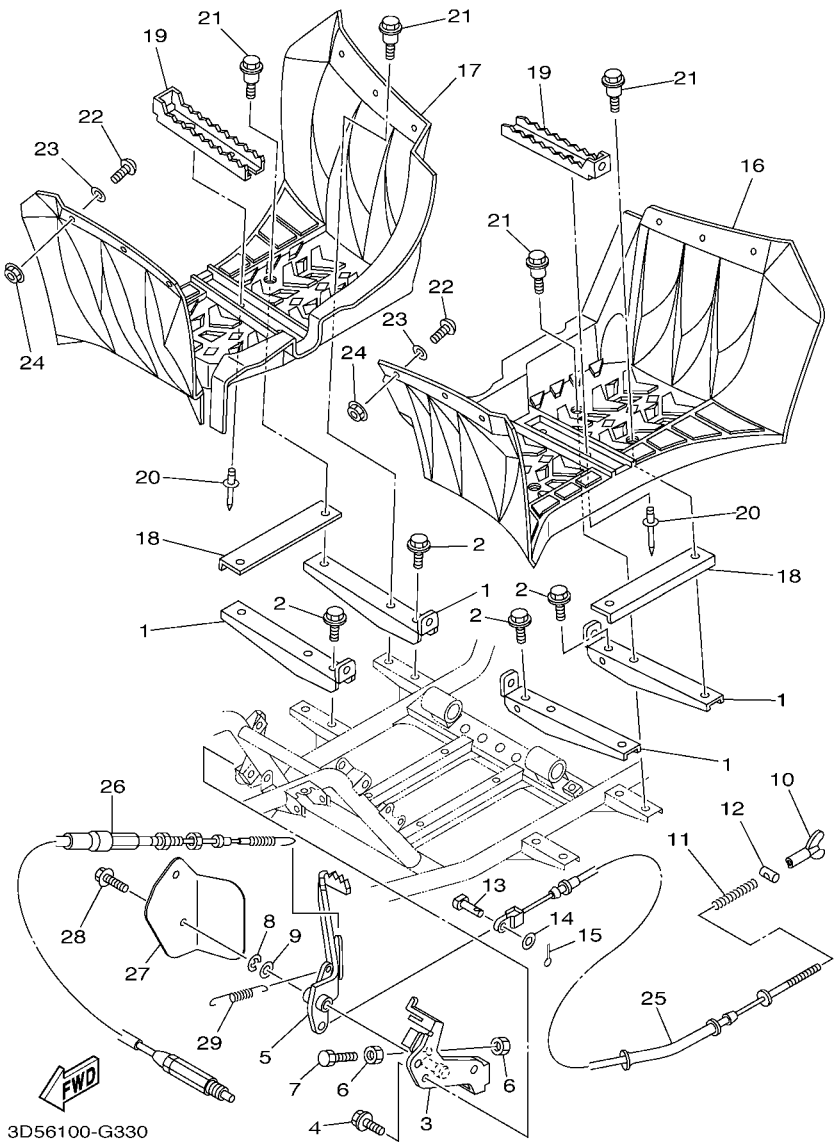

FIG. 33 STAND & FOOTREST

REF. NO.	PART NO.	DESCRIPTION	USA					REMARKS
28	90119–06244	BOLT, WITH WASHER	1					
29	90506–12403	SPRING, TENSION	1					

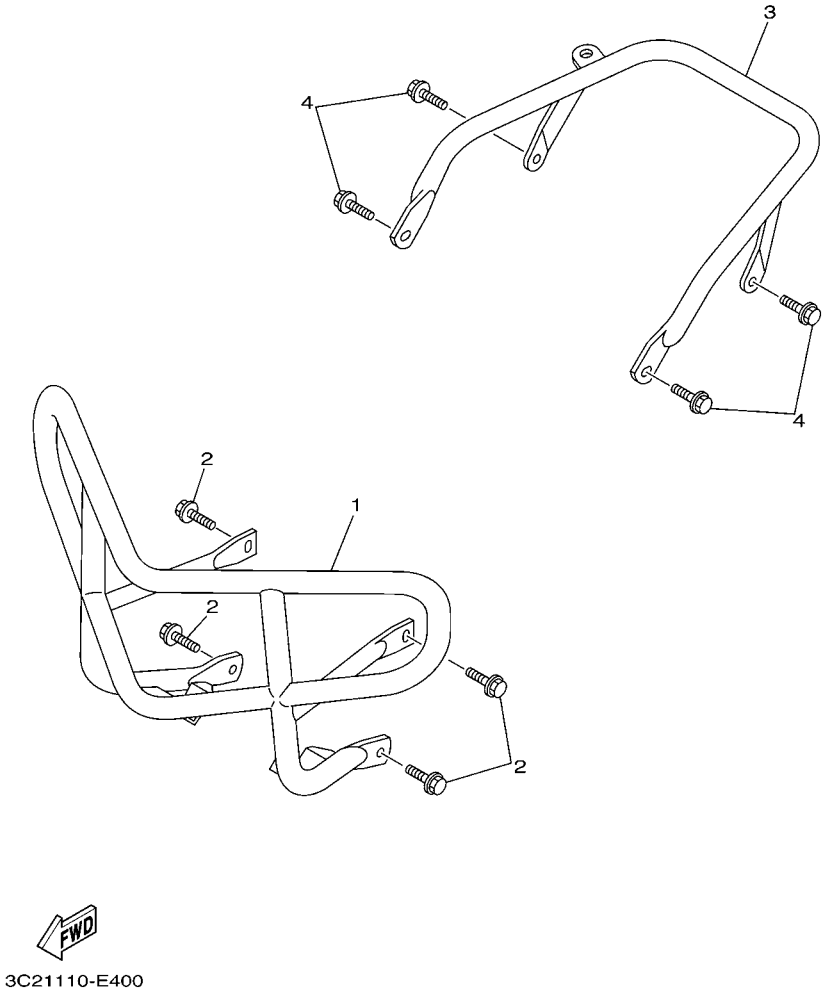

FIG. 34 GUARD

REF. NO.	PART NO.	DESCRIPTION	USA					REMARKS
1	3C2–F845N–00	BAR, CARRY FRONT	1					
2	95812–08012	BOLT, FLANGE	4					
3	3C2–F845R–00	BAR, CARRY REAR	1					
4	95812–08012	BOLT, FLANGE	4					

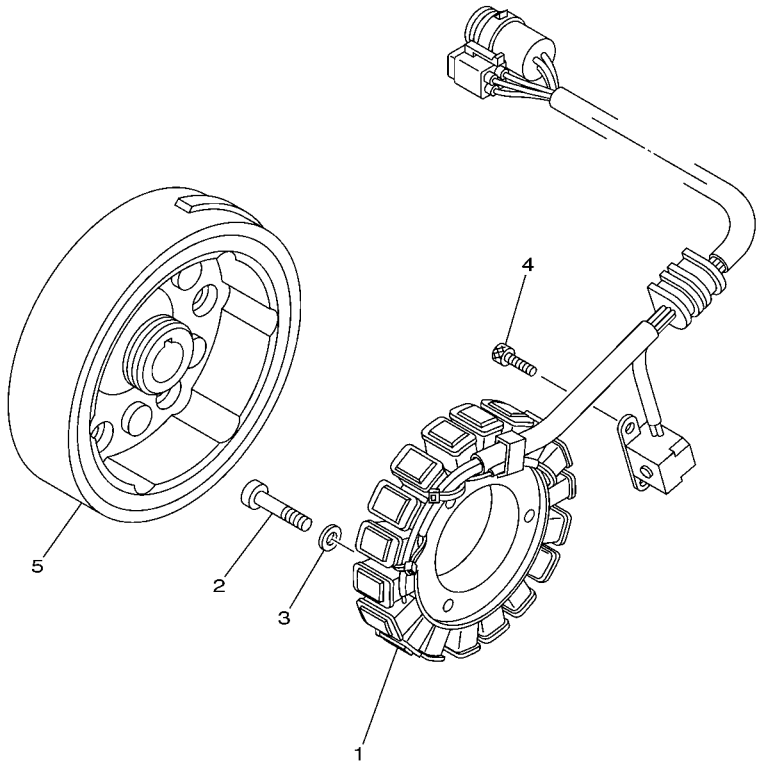

5UH1100-C370

FIG. 35 GENERATOR

REF. NO.	PART NO.	DESCRIPTION	USA					REMARKS
1	5UH–81410–00	STATOR ASSY	1					
2	92502–06030	SCREW, PAN HEAD	3					
3	92902–06600	WASHER, PLATE	3					
4	91312–05012	BOLT	2					
5	5UH–81450–00	ROTOR ASSY	1					

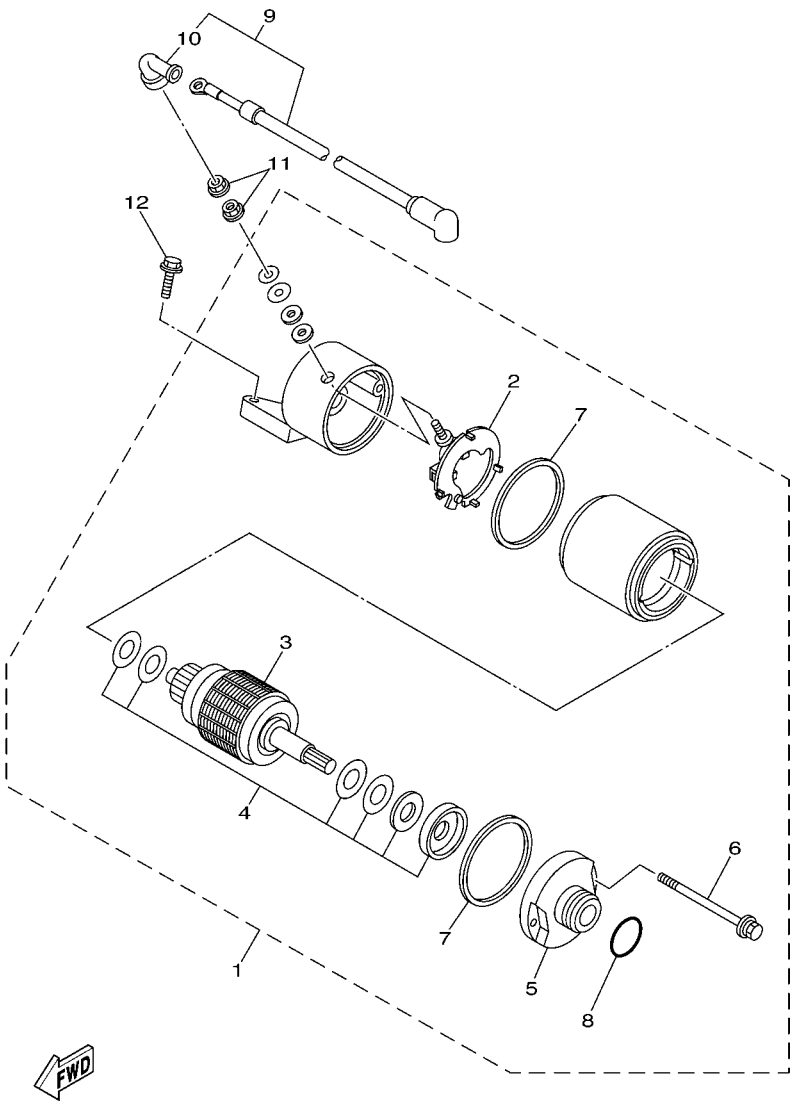

5UH1100-C380

FIG. 36 STARTING MOTOR

REF. NO.	PART NO.	DESCRIPTION	USA					REMARKS
1	3HE–81890–00	MOTOR ASSY	1					
2	3HE–81840–00	.BRUSH HOLDER ASSY	1					
3	3HE–81850–00	.ARMATURE ASSY	1					
4	3AJ–81809–00	.WASHER KIT	1					
5	3HE–81830–00	.FRONT BRACKET ASSY	1					
6	3HE–81826–00	.BOLT	2					
7	11H–81844–00	.GASKET	2					
8	1FK–81847–00	.O-RING	1					
9	3XF–81815–00	CORD, STARTER MOTOR	1					
10	4G0–81871–00	.CAP	1					
11	4XV–8182A–00	NUT	2					
12	95022–06025	BOLT, FLANGE	2					

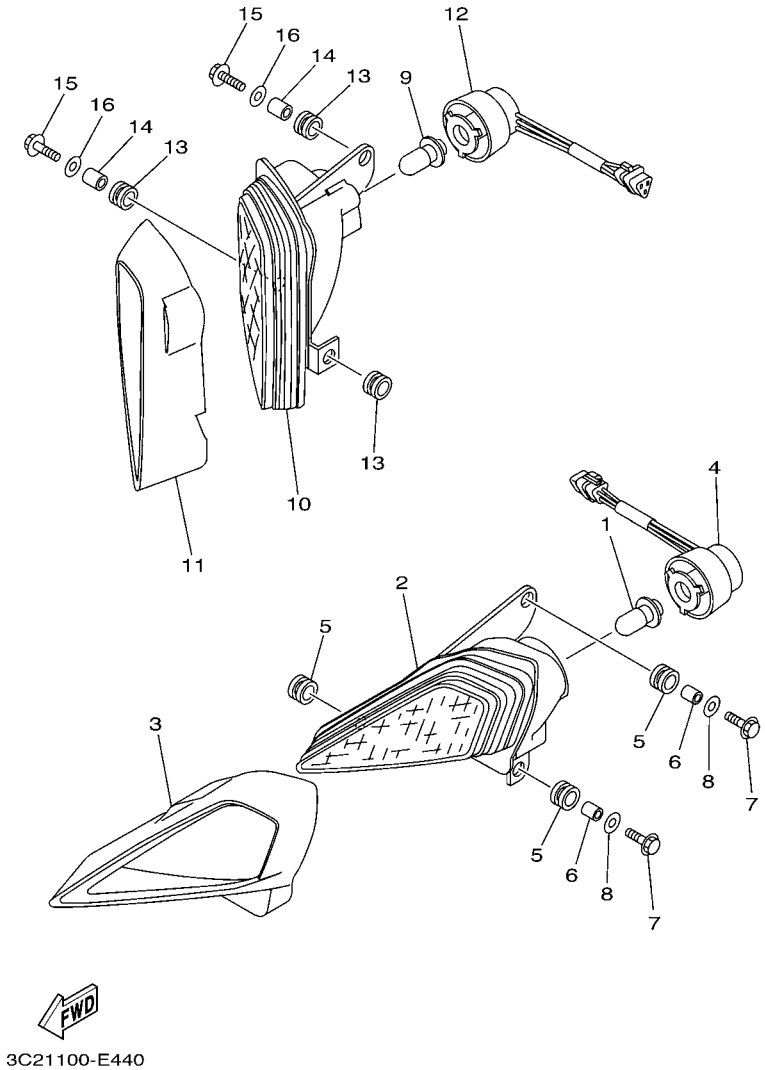

FIG. 37 HEADLIGHT

REF. NO.	PART NO.	DESCRIPTION	USA					REMARKS
1	4KB–84314–01	BULB (12V-30/30W)	1					
2	5TG–84110–03	HEADLIGHT UNIT ASSY	1					
3	5TG–84165–01	RIM, HEADLIGHT COVER 1	1					
4	5TG–84140–01	SOCKET CORD ASSY	1					
5	90480–14102	GROMMET	3					
6	90387–07598	COLLAR	2					
7	90101–06053	BOLT	2					
8	90201–06078	WASHER, PLATE	2					
9	4KB–84314–01	BULB (12V-30/30W)	1					
10	5TG–84310–03	HEADLIGHT UNIT ASSY	1					
11	5TG–84166–01	RIM, HEADLIGHT COVER 2	1					
12	5TG–84340–01	SOCKET CORD ASSY 1	1					
13	90480–14102	GROMMET	3					
14	90387–07598	COLLAR	2					
15	90101–06053	BOLT	2					
16	90201–06078	WASHER, PLATE	2					

FIG. 38 TAILLIGHT

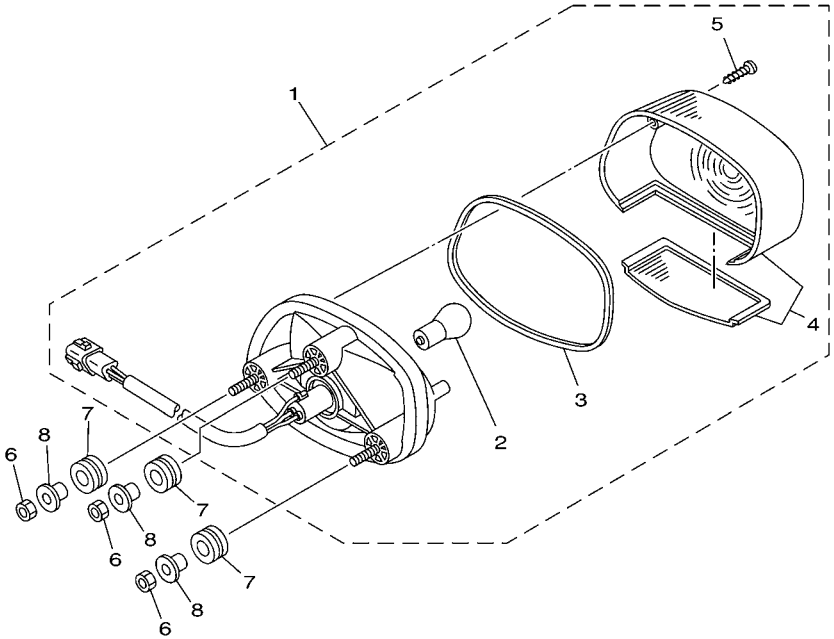

REF. NO.	PART NO.	DESCRIPTION	USA					REMARKS
1	5LP–84700–11	TAILLIGHT ASSY	1					
2	256–84714–60	.BULB (12V-21/5W)	1					
3	4TR–84723–00	.GASKET, TAIL LENS	1					
4	4TR–84733–00	.LENS, TAILLIGHT	1					
5	97702–40620	.SCREW, TAPPING	2					
6	95302–06600	NUT	3					
7	90480–14555	GROMMET	3					
8	90387–07391	COLLAR	3					

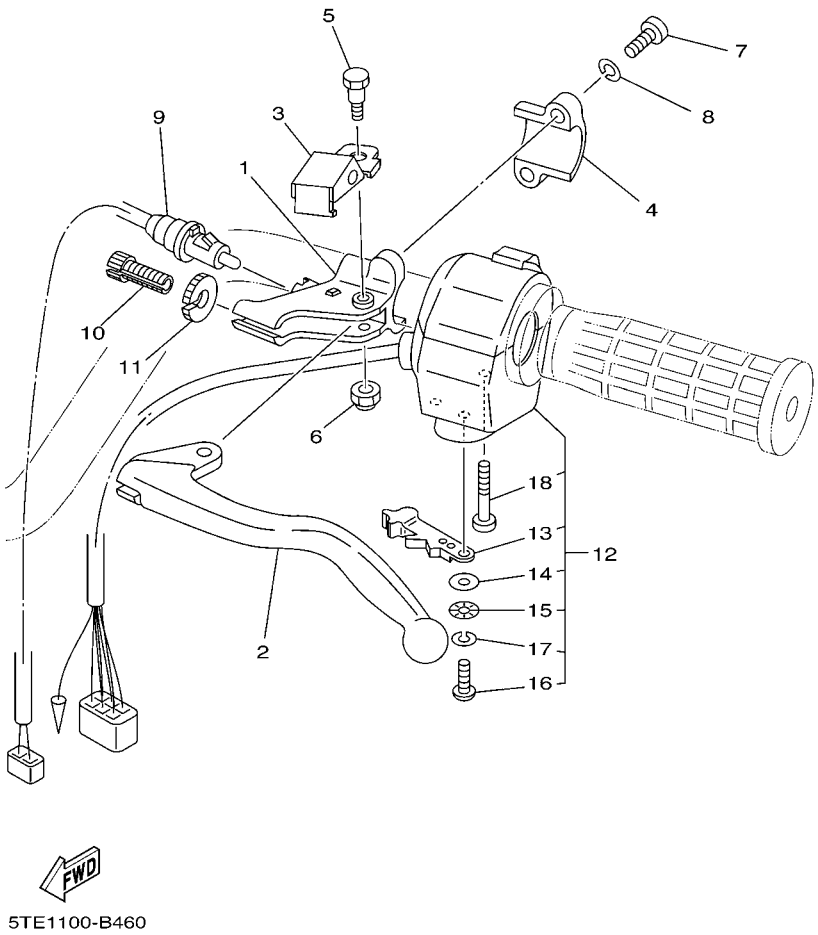

FIG. 39 HANDLE SWITCH & LEVER

REF. NO.	PART NO.	DESCRIPTION	USA					REMARKS
1	1YW–82911–02	HOLDER, LEVER 1	1					
2	2HT–83912–00	LEVER 1	1					
3	1YW–83965–00	LEVER, LOCK	1					
4	2XJ–82913–00	HOLDER, LEVER LOWER 1	1					
5	90109–06576	BOLT	1					
6	95607–06100	NUT, U	1					
7	98507–06020	SCREW, PAN HEAD	2					
8	92907–06100	WASHER, SPRING	2					
9	3FA–83980–03	FRONT STOP SWITCH ASSY	1					
10	90123–08046	BOLT	1					
11	90179–08148	NUT	1					
12	5LP–83973–01	SWITCH, HANDLE 3	1					
13	5GH–83941–00	.LEVER, STARTER	1					
14	1UY–83909–00	.WASHER, SPECIAL	1					
15	3L4–83943–00	.WASHER, STARTER	1					
16	98517–05012	.SCREW, PAN HEAD	1					
17	92907–05100	.WASHER, SPRING	1					
18	98507–05030	.SCREW, PAN HEAD	2					

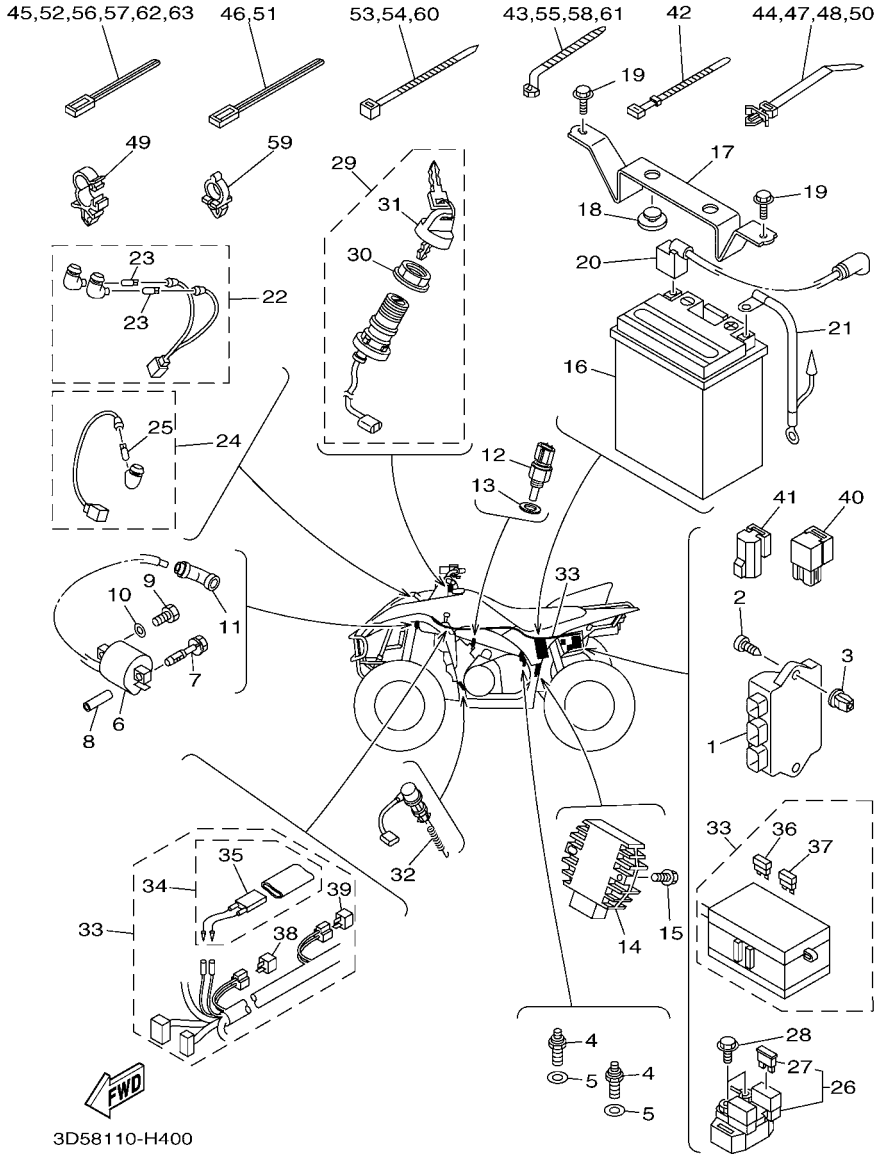

FIG. 40 ELECTRICAL 1

REF. NO.	PART NO.	DESCRIPTION	USA					REMARKS
1	5UH–85540–00	C.D.I. UNIT ASSY	1					
2	97702–60420	SCREW, TAPPING	1					
3	90338–08226	PLUG	1					
4	3GB–82540–01	NEUTRAL SWITCH ASSY	2					
5	90430–10148	GASKET	2					
6	5KM–82310–00	IGNITION COIL ASSY	1					
7	90109–06865	BOLT	1					
8	5UH–H1318–00	SPACER	1					
9	97002–06020	BOLT	1					
10	92902–06600	WASHER, PLATE	1					
11	1UY–82370–20	PLUG CAP ASSY	1					
12	4GB–83591–10	THERMO UNIT	1					
13	90201–12172	WASHER, PLATE	1					
14	5GT–81960–00	RECTIFIER & REGULATOR ASSY	1					
15	95802–06020	BOLT, FLANGE	2					
16	5TE–H2100–00	BATTERY ASSY(YUASA YTX14AH)	1					
17	5TE–H2128–01	BRACKET, BATTERY	1					
18	371–82121–00	PAD, BATTERY	2					
19	95802–06020	BOLT, FLANGE	2					
20	3D5–H2115–00	WIRE, PLUS LEAD	1					
21	5UH–H2116–00	WIRE, MINUS LEAD	1					
22	5TE–83530–00	PILOT LIGHT ASSY	1					
23	5GH–83516–00	.BULB (14V-1.7W)	2					
24	4KB–83530–30	PILOT LIGHT ASSY	1					RED (OIL)
25	5GH–83516–00	.BULB (14V-1.7W)	1					
26	4XE–81940–12	STARTER RELAY ASSY	1					
27	2GH–82151–00	.FUSE (20A-BL)	2					

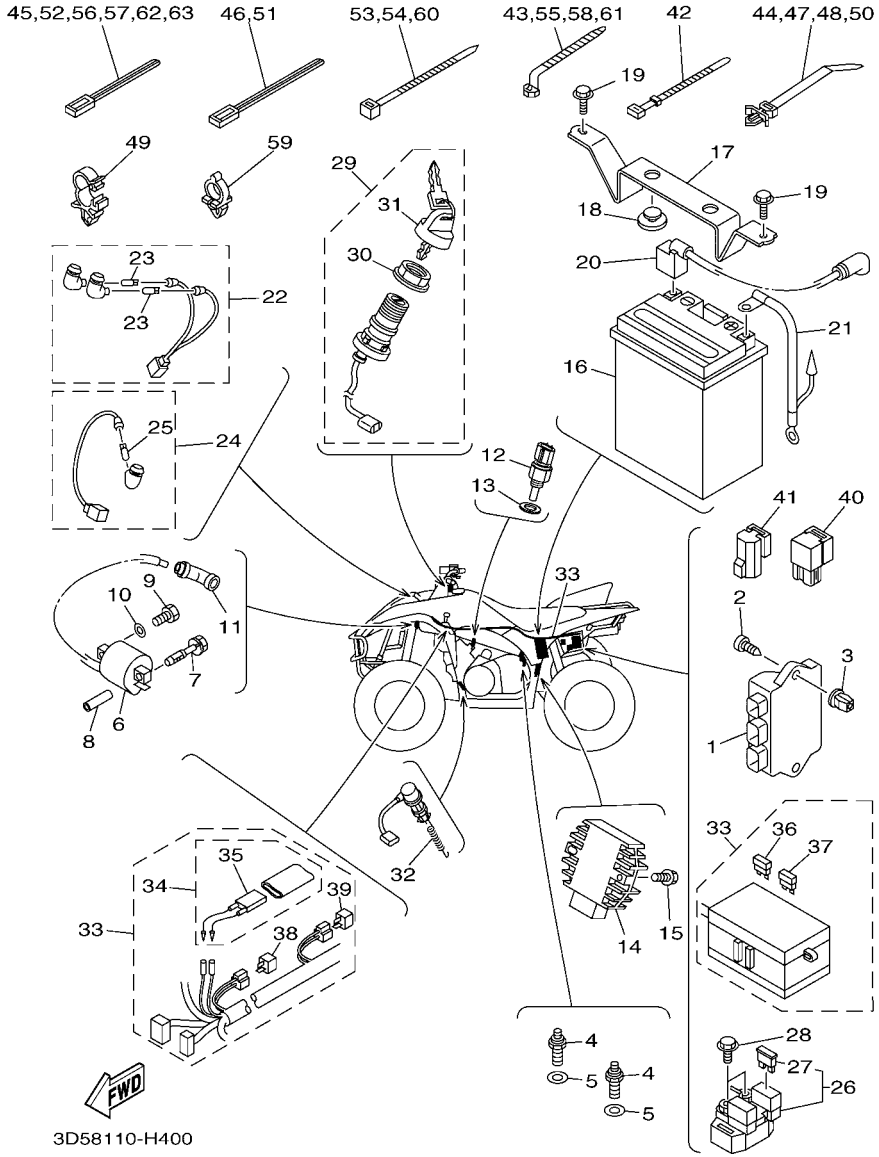

FIG. 40 ELECTRICAL 1

REF. NO.	PART NO.	DESCRIPTION	USA					REMARKS
28	95022–06008	BOLT, FLANGE	2					
29	5LP–82510–00	MAIN SWITCH ASSY	1					
30	3HN–82569–00	.NUT, MAIN SWITCH	1					
31	3HN–82579–00	.CAP, KEY	1					
32	4KB–82530–10	STOP SWITCH ASSY	1					
33	3D5–82590–00	WIRE HARNESS ASSY	1					
34	5ND–82180–00	.CIRCUIT BREAKER ASSY	1					
35	5ND–82560–00	..THERMO SWITCH ASSY	1					
36	5JJ–82151–10	.FUSE (15A-BL)	3					
37	5JJ–82151–30	.FUSE (10A-BL)	2					
38	3WP–81980–00	.DIODE ASSY	1					
39	4WA–81980–00	.DIODE ASSY	1					
40	5DM–81950–00	RELAY ASSY (G8HN-1C4T-DJ-Y52)	1					
41	29U–81950–93	RELAY ASSY	1					
42	90464–51800	CLAMP	2					
43	90464–12830	CLAMP	1					
44	90464–25800	CLAMP	2					
45	90464–31827	CLAMP	4					
46	90464–40825	CLAMP	4					
47	90464–25800	CLAMP	2					
48	90464–25800	CLAMP	3					
49	90464–16006	CLAMP	1					
50	90464–25800	CLAMP	1					
51	90464–40825	CLAMP	1					
52	90464–31827	CLAMP	2					
53	90464–48800	CLAMP	2					
54	90464–48800	CLAMP	1					

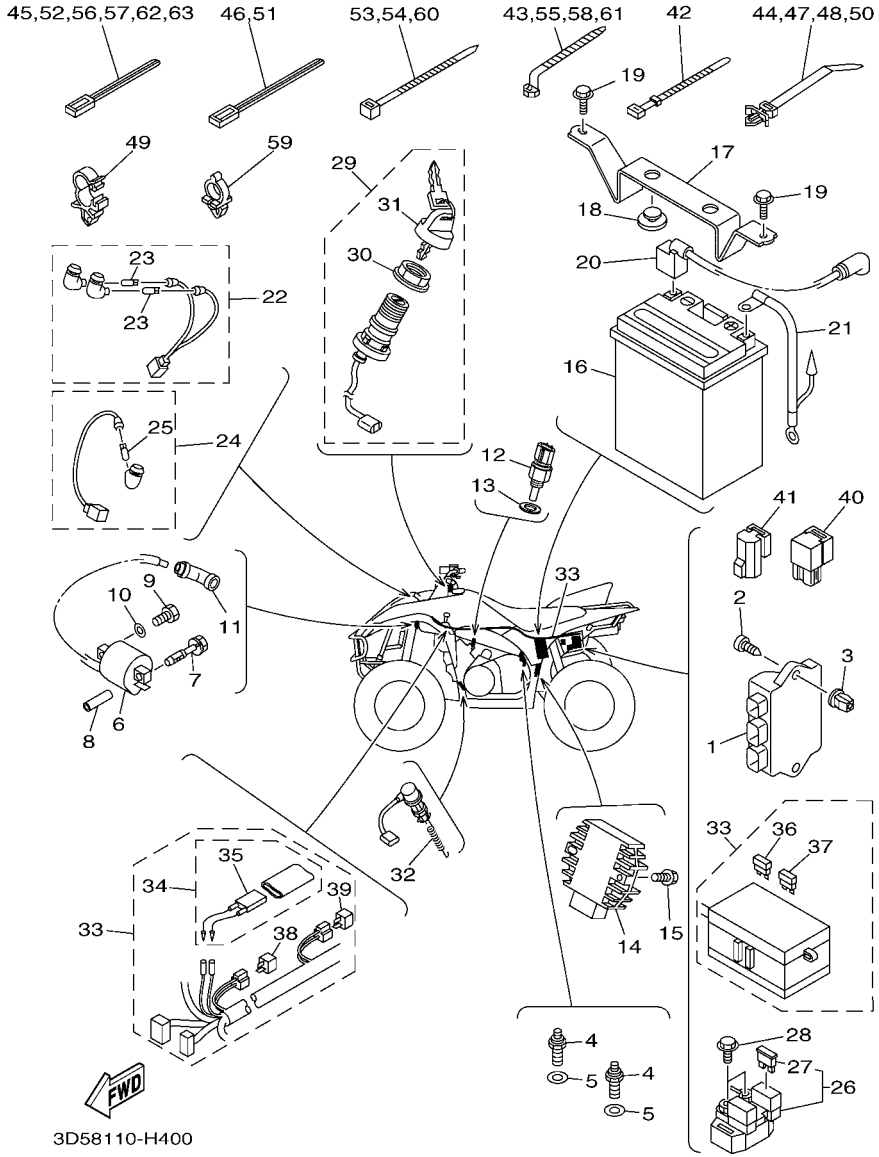

FIG. 40 ELECTRICAL 1

REF. NO.	PART NO.	DESCRIPTION	USA					REMARKS
55	90464–12830	CLAMP	1					
56	90464–31827	CLAMP	1					
57	90464–31827	CLAMP	2					
58	90464–12830	CLAMP	1					
59	90464–10833	CLAMP	2					
60	90464–48800	CLAMP	4					
61	90464–12830	CLAMP	1					
62	90464–31827	CLAMP	1					
63	90464–31827	CLAMP	1					

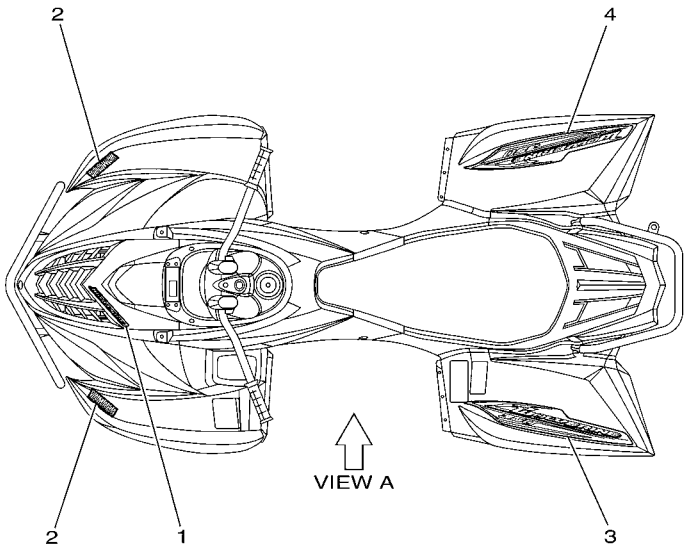

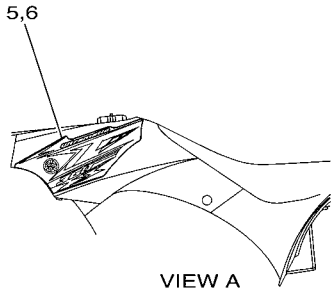

3D58110-H410

FIG. 41 GRAPHICS

REF. NO.	PART NO.	DESCRIPTION	USA					REMARKS
1	3C2–F1565–40	EMBLEM, 2	1					
2	3C2–F153E–20	EMBLEM, YAMAHA	2					
3	3D5–F165G–20	GRAPHIC, REAR (LH)	1					
4	3D5–F165H–20	GRAPHIC, REAR (RH)	1					
5	3D5–F1781–20	EMBLEM 1	1					
6	3D5–F1782–20	EMBLEM 2	1					

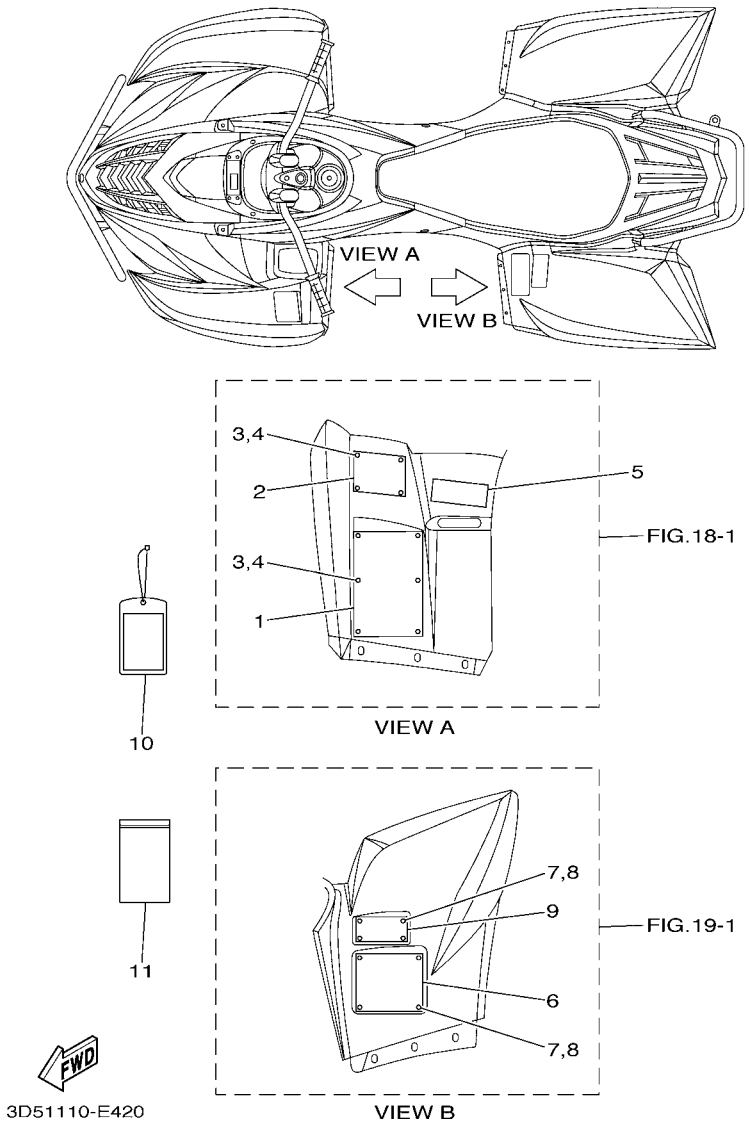

FIG. 42 EMBLEM & LABEL 1

REF. NO.	PART NO.	DESCRIPTION	USA					REMARKS
1	4XE–F1568–00	LABEL, WARNING	1					ENGLISH
2	1P0–F816L–00	LABEL, WARNING AGE	1					ENGLISH
3	4XE–F1539–10	RIVET	10					
4	4XE–F1549–00	WASHER, FENDER MOLD	10					
5	5TE–F151E–00	LABEL 2	1					ENGLISH
6	3D5–F816M–00	LABEL, WARNING TIRE & LOAD	1					
7	4XE–F1539–10	RIVET	8					
8	4XE–F1549–00	WASHER, FENDER MOLD	8					
9	3C2–F151H–00	LABEL 5	1					ENGLISH
10	3C2–F819R–10	TAG, WARNING	1					
11	1P0–F8186–01	POUCH	1					

PART NO.	REF. NO.
5YT–11101–20	1 – 1
3Y1–1111F–00	1 – 8
3Y1–11127–00	1 – 7
4X7–11127–00	2 – 1
3Y1–11133–11	1 – 2
4KB–11145–00	5 – 9
4WU–11160–01	1 – 18
4KB–11165–00	1 – 19
1UY–11181–01	1 – 11
2NL–11186–12	1 – 26
2NL–11187–11	1 – 27
214–11198–01	10 – 13
	22 – 14
5YT–11310–00	2 – 2
4KB–11351–00	2 – 8
5UH–11400–00	3 – 1
5KM–11447–00	3 – 18
5UH–11454–01	3 – 24
5UH–11531–00	3 – 27
5UH–11536–00	3 – 8
5UH–11565–00	3 – 11
4GB–11610–00	3 – 20
4GB–11610–20	3 – 20
4GB–11610–40	3 – 20
5UH–11631–00–C0	3 – 19
55V–11633–00	3 – 22
5UH–11636–00	3 – 19
5UH–11638–00	3 – 19
5UH–11651–00	3 – 6
30X–11681–00	3 – 4
1UY–12111–01	4 – 1
22U–12113–00	4 – 4
1UY–12114–01	4 – 5
3Y1–12116–00	4 – 3
3Y1–12117–01	4 – 7
1J7–12118–00	4 – 8
1UY–12121–01	4 – 2
M01–12129–00	4 – 6
3GD–12151–11	4 – 9
4SH–12156–00	4 – 11
31G–12158–00	4 – 14
31G–12159–02	4 – 13
5UH–12170–10	5 – 1
5UH–12176–00	5 – 6
31G–12210–01	5 – 13
3GD–12213–00	5 – 16
31G–12214–00	5 – 15
31G–12222–00	5 – 14

PART NO.	REF. NO.
5UH–12231–00	5 – 11
5UH–12241–00	5 – 12
1S3–13132–00	6 – 13
5UH–1319K–00	6 – 10
5UH–13300–00	6 – 1
5UH–13327–00	6 – 4
5UH–13329–00	6 – 2
5UH–13411–00	6 – 6
5GH–13440–20	6 – 11
5UH–13586–00	7 – 1
5UH–14103–00	8 – 39
5UH–14105–10	8 – 7
4SV–14107–20	8 – 14
5UH–1410A–00	8 – 21
5DM–14112–00	8 – 5
5DM–14141–42	8 – 16
4KM–14142–17	8 – 36
3H1–14147–00	8 – 9
522–14161–00	8 – 27
5FU–14167–00	8 – 43
127–14186–00	8 – 13
3FV–14191–00	8 – 23
24W–14193–00	7 – 7
4KB–14193–20	8 – 19
5FU–14197–00	8 – 31
3DM–14216–00	8 – 45
4KM–14216–00	8 – 17
1HX–14231–16	8 – 18
3G2–1423A–62	8 – 22
3G2–1423E–51	8 – 10
5GH–14261–00	8 – 11
5UH–14348–00	8 – 41
31A–14419–00	7 – 24
5BF–1443E–00	11 – 29
	16 – 26
583–14561–00	8 – 12
5DM–14561–00	8 – 15
1FN–14565–00	8 – 29
3GD–14613–00	9 – 10
5EL–1490H–00	8 – 37
5UH–1490J–10	8 – 2
5GH–14918–00	8 – 46
5GH–14918–10	8 – 6
5DM–14933–00	8 – 3
4XE–14937–00	8 – 40
5GH–14937–00	8 – 35
5GH–14940–10	8 – 4
256–14956–01	8 – 44

PART NO.	REF. NO.
3H1–14962–00	8 – 8
5DM–14985–00	8 – 30
7T9–14987–00	8 – 42
5WH–15100–00	10 – 1
5UH–15113–00	11 – 4
5UH–15163–00	13 – 4
5UH–15315–00	11 – 19
5UH–15317–00	11 – 27
5KM–15351–00	11 – 23
517–15362–02	11 – 13
2N4–15371–00	22 – 15
5UH–15379–00	11 – 24
4WV–15381–00	10 – 17
2K7–15383–00	10 – 10
11H–15383–02	15 – 3
5GH–15385–00	10 – 21
5GH–15388–00	10 – 8
5UH–15411–00	11 – 1
5UH–15420–00	11 – 17
5UH–15421–00	11 – 18
5UH–15431–00	11 – 21
5UH–15442–00	10 – 14
5UH–15451–00	11 – 6
5UH–15463–00	13 – 13
3C2–15492–00	11 – 15
5UH–15512–00	12 – 1
5UH–15517–00	12 – 3
1VJ–15521–00	12 – 2
5KM–15590–00	12 – 5
3D5–15730–00	11 – 43
5UH–16181–00	3 – 17
5UH–16611–00	13 – 1
5UH–16620–00	13 – 2
5UH–16626–00	13 – 3
5GH–16664–00	13 – 11
5UH–17168–00	14 – 4
5UH–17223–10	14 – 8
5UH–17285–00	14 – 14
5UH–17421–10	14 – 6
5UH–17453–00	14 – 10
5UH–17521–00	15 – 1
5UH–17523–00	14 – 20
5UH–17530–10	15 – 8
5GH–17531–00	15 – 18
5KM–17531–00	15 – 5
5GH–17531–10	15 – 18
5KM–17531–10	15 – 5
5GH–17531–20	15 – 18

PART NO.	REF. NO.
5KM–17531–20	15 – 5
5GH–17531–30	15 – 18
5KM–17531–30	15 – 5
5GH–17531–40	15 – 18
5KM–17531–40	15 – 5
5GH–17531–50	15 – 18
5KM–17531–50	15 – 5
5GH–17531–60	15 – 18
5KM–17531–60	15 – 5
5KM–17531–70	15 – 5
5GH–17551–00	15 – 9
5UH–17556–10	15 – 14
5UH–17582–11	14 – 7
5UH–17583–01	14 – 22
5UH–17611–00	13 – 27
5UH–17620–00	13 – 15
5UH–17623–00	13 – 18
4WV–17632–00	13 – 17
5UH–17639–00	13 – 22
5UH–17641–01	13 – 26
5UH–17644–00	13 – 37
5UH–17645–00	13 – 25
4WV–17653–00	13 – 19
4WV–17654–01	13 – 20
5UH–17660–00	13 – 30
4CW–17664–00	13 – 34
5UH–17670–00	13 – 31
5UH–17681–20	14 – 1
5UH–17684–00	13 – 36
5UH–18103–00	16 – 1
3D5–18115–00	16 – 18
5GH–18131–00	16 – 24
5TE–18174–00	16 – 22
5UH–18191–00	16 – 15
4SH–18198–00	16 – 11
5UH–18300–01	16 – 21
5UH–18511–00	16 – 5
2A6–18535–00	16 – 6
5GH–18617–00	16 – 25
5UH–2177C–30	7 – 26
1W1–22128–00	23 – 5
2HR–23526–00	24 – 11
1UY–23812–00	25 – 6
8K1–23814–00	25 – 3
2GU–23872–00	17 – 22
1UY–23894–01	25 – 10
4EW–2412F–00	26 – 20
5UH–24311–00	26 – 16

PART NO.	REF. NO.
3D5–24500–00	26 – 3
1P6–24512–00	26 – 4
3D5–24524–00	26 – 5
3D5–24535–00	26 – 6
5KM–24610–00	26 – 2
5GT–2512A–00	28 – 5
	28 – 24
	30 – 47
5HA–25181–00	28 – 6
4SH–25367–01	30 – 11
3GD–2580T–00	29 – 5
3GD–2580U–00	29 – 12
3GD–25827–00	29 – 10
3GD–25828–00	29 – 17
5KM–2583T–01	32 – 1
5JX–25852–01	32 – 4
4L0–25854–00	32 – 3
2GU–25866–00	32 – 13
5GH–25867–00	32 – 6
1FK–2589F–00	32 – 11
3GD–25933–00	29 – 11
	29 – 18
1NV–26129–00	31 – 14
4KB–26250–10	31 – 4
1NV–2625G–01	31 – 6
4KB–2628F–10	31 – 5
4KB–2628G–00	31 – 13
1NV–26304–00	31 – 12
5GH–26311–10	31 – 19
5EB–26332–00	32 – 7
3D5–26341–00	31 – 21
20E–26343–00	31 – 22
	33 – 10
5TE–26361–00	33 – 25
5GH–2637F–10	33 – 26
1NV–26398–00	31 – 15
109–27114–00	21 – 12
1NV–2811A–01	17 – 41
3HN–46108–01	22 – 32
29U–46125–00	22 – 10
2HR–46187–00	22 – 35
5UH–81410–00	35 – 1
5UH–81450–00	35 – 5
3AJ–81809–00	36 – 4
3XF–81815–00	36 – 9
3HE–81826–00	36 – 6
4XV–8182A–00	36 – 11
3HE–81830–00	36 – 5

PART NO.	REF. NO.
3HE–81840–00	36 – 2
11H–81844–00	36 – 7
1FK–81847–00	36 – 8
3HE–81850–00	36 – 3
4G0–81871–00	36 – 10
3HE–81890–00	36 – 1
4XE–81940–12	40 – 26
5DM–81950–00	40 – 40
29U–81950–93	40 – 41
5GT–81960–00	40 – 14
3WP–81980–00	40 – 38
4WA–81980–00	40 – 39
371–82121–00	40 – 18
2GH–82151–00	40 – 27
5JJ–82151–10	40 – 36
5JJ–82151–30	40 – 37
5ND–82180–00	40 – 34
5KM–82310–00	40 – 6
1UY–82370–20	40 – 11
5LP–82510–00	40 – 29
4KB–82530–10	40 – 32
3GB–82540–01	40 – 4
5ND–82560–00	40 – 35
3HN–82569–00	40 – 30
3HN–82579–00	40 – 31
3D5–82590–00	40 – 33
1YW–82911–02	39 – 1
2XJ–82913–00	39 – 4
4V4–82913–00	31 – 16
5GH–83516–00	40 – 23
	40 – 25
5TE–83530–00	40 – 22
4KB–83530–30	40 – 24
4GB–83591–10	40 – 12
1UY–83909–00	39 – 14
2HT–83912–00	39 – 2
5KM–83922–00	32 – 8
5GH–83941–00	39 – 13
3L4–83943–00	39 – 15
1YW–83965–00	39 – 3
5LP–83973–01	39 – 12
5LP–83980–00	32 – 10
3FA–83980–03	39 – 9
5TG–84110–03	37 – 2
5TG–84140–01	37 – 4
5TG–84165–01	37 – 3
5TG–84166–01	37 – 11
5TG–84310–03	37 – 10

PART NO.	REF. NO.
4KB–84314–01	37 – 1
	37 – 9
5TG–84340–01	37 – 12
5LP–84700–11	38 – 1
256–84714–60	38 – 2
4TR–84723–00	38 – 3
4TR–84733–00	38 – 4
5UH–85540–00	40 – 1
3C2–E1166–00	1 – 21
5UH–E2405–00	6 – 16
3C2–E2692–00	11 – 33
5UH–E3464–01	6 – 17
3D5–E3465–00	6 – 18
5UH–E3480–00	6 – 15
5UH–E3573–00	6 – 20
5UH–E3577–00	6 – 21
3D5–E4101–10	8 – 1
5FU–E4147–00	8 – 25
5FU–E4155–00	8 – 38
5UH–E4191–00	7 – 17
5UH–E4349–00	7 – 6
5UH–E4411–00	7 – 9
5UH–E4412–00	7 – 13
5UH–E4424–00	7 – 15
5ND–E442F–00	7 – 19
5ND–E4437–02	7 – 21
5UH–E4438–00	7 – 18
5UH–E4451–10	7 – 12
5UH–E4453–00	7 – 20
5UH–E4458–00	7 – 10
5UH–E4462–00	7 – 14
5UH–E4468–00	7 – 11
5UH–E4611–00	9 – 1
5UH–E4612–00	9 – 2
5UH–E4628–01	9 – 4
5UH–E4638–00	9 – 19
5UH–E4711–00	9 – 11
5ND–E4714–00	9 – 20
5ND–E4715–00	9 – 21
5UH–E4718–00	9 – 14
5ND–E4719–00	9 – 13
5UH–E4728–01	9 – 16
5ND–E4737–00	9 – 27
3C2–E4752–00	9 – 12
5ND–E4759–00	9 – 23
5UH–E4769–10	7 – 16
5ND–E4777–00	9 – 22
5UH–E477K–01	9 – 6

PART NO.	REF. NO.
5UH–E477R–00	9 – 3
5UH–E477T–00	9 – 5
	9 – 17
3C2–E4787–00	9 – 24
5ND–E4788–00	9 – 15
5UH–E5336–00	17 – 3
	17 – 9
	17 – 15
3D5–E5471–00	11 – 28
3C2–E5472–00	11 – 32
5ND–E5472–00	11 – 31
5ND–E5473–00	11 – 36
5UH–E5474–00	11 – 37
4XE–E7537–15	22 – 25
4XE–E7537–30	22 – 25
4XE–E7537–40	22 – 25
4XE–E7537–45	22 – 25
4XE–E7537–50	22 – 25
4XE–E7537–60	22 – 25
3D5–F1110–00	17 – 1
5FU–F111A–00	17 – 32
3C2–F1228–00	17 – 33
5UH–F1315–01	17 – 2
5UH–F1316–01	17 – 8
3C2–F1446–01	17 – 26
5ND–F147A–02	17 – 42
5ND–F1486–00	17 – 7
	17 – 12
5ND–F1488–00	17 – 16
3C2–F1500–90	18 – 1
5TE–F151E–00	42 – 5
3C2–F151H–00	42 – 9
4XE–F1539–10	42 – 3
	42 – 7
3C2–F153E–20	41 – 2
4XE–F1549–00	42 – 4
	42 – 8
3C2–F1556–A0	18 – 7
3C2–F1565–40	41 – 1
4XE–F1568–00	42 – 1
5ND–F1585–01	17 – 27
3D5–F1600–70	19 – 1
3C2–F163A–00	19 – 4
5ND–F163E–00	19 – 5
5ND–F163F–00	19 – 8
5ND–F1652–00	19 – 6
3D5–F165G–20	41 – 3
3D5–F165H–20	41 – 4

PART NO.	REF. NO.
3C2–F171A–30	20 – 1
5FU–F174A–02	19 – 7
3D5–F1781–20	41 – 5
3D5–F1782–20	41 – 6
3C2–F1823–00	11 – 34
	11 – 35
3C2–F2110–00	21 – 1
5ND–F2123–00	21 – 5
5ND–F2189–00	21 – 8
4XE–F219X–01	21 – 11
3D5–F2210–00	23 – 1
5UH–F2825–00	17 – 29
5ND–F3192–01	32 – 18
3D5–F3350–00	24 – 14
5ND–F3501–10	28 – 7
5ND–F3502–10	28 – 25
5ND–F3540–12	24 – 1
5FU–F3549–00	24 – 2
	24 – 5
	28 – 12
	28 – 30
5ND–F3550–12	24 – 4
5ND–F357A–01	24 – 9
5ND–F358A–01	24 – 10
3C2–F3813–00	25 – 1
5ND–F3816–12	25 – 2
5ND–F3831–00	25 – 15
4XE–F3833–00	25 – 18
4XE–F3834–00	25 – 19
1D9–F3841–01	25 – 16
5ND–F3845–01	25 – 17
5ND–F3868–00	25 – 8
3C2–F4110–10	26 – 1
3D5–F4131–00	18 – 4
3C2–F4144–00	17 – 39
5UH–F414H–01	26 – 19
3C2–F4710–00	27 – 1
3C2–F4731–00	27 – 2
4XE–F4747–00	27 – 3
3C2–F4776–00	27 – 5
4XE–F478V–00	27 – 4
5ND–F5111–21	28 – 14
	28 – 32
5ND–F514A–00	28 – 38
5ND–F5180–11	28 – 1
	28 – 20
5FU–F5319–10	30 – 31
5FU–F531E–10	30 – 39

PART NO.	REF. NO.
5VH–F5321–01	30 – 16
5FU–F5327–01	30 – 30
5VH–F5333–00	30 – 19
5FU–F5336–00	30 – 40
5VH–F533A–01	30 – 20
5VH–F5351–01	30 – 17
5VH–F5355–01	30 – 23
5VH–F5359–00	30 – 26
5FU–F5377–11	30 – 41
5FU–F537Y–00	30 – 33
5TE–F5381–01	30 – 36
5ND–F5383–11	30 – 7
5FU–F5384–00	30 – 43
5ND–F5390–11	30 – 1
	30 – 4
5VH–F539F–01	30 – 27
1P0–F5411–00	30 – 8
	30 – 42
5VH–F5818–00	30 – 25
5ND–F582T–00	29 – 1
	29 – 3
5ND–F5871–00	32 – 15
3C2–F5872–01	32 – 12
5ND–F5873–01	32 – 14
5ND–F5875–01	32 – 16
5VH–F5898–00	30 – 24
3C2–F6111–00	31 – 1
5ND–F6124–00	31 – 3
5FU–F6241–10	31 – 2
3C2–F6331–00	31 – 20
5TE–F7211–00	33 – 5
5TE–F7412–11	33 – 3
3C2–F741A–00	33 – 19
5ND–F7445–00	33 – 18
3C2–F7453–00	33 – 16
3C2–F7463–00	33 – 17
3C2–F7471–00	33 – 1
5UH–F7491–01	33 – 27
5ND–F8100–00	17 – 40
1P0–F816L–00	42 – 2
3D5–F816M–00	42 – 6
1P0–F8186–01	42 – 11
3C2–F819R–10	42 – 10
3C2–F8309–00	18 – 3
3C2–F831V–00	17 – 23
3C2–F832V–00	17 – 24
3C2–F836B–00	18 – 6
3D5–F837L–00	18 – 13

PART NO.	REF. NO.
3C2–F845N–00	34 – 1
3C2–F845R–00	34 – 3
5ND–G6101–03	22 – 1
4XE–G6102–00	22 – 4
4XE–G6117–25	22 – 27
4XE–G6117–30	22 – 27
4XE–G6117–35	22 – 27
4XE–G6117–40	22 – 27
4XE–G6117–45	22 – 27
4XE–G6117–50	22 – 27
4XE–G6118–10	22 – 26
4XE–G6118–11	22 – 26
4XE–G6118–12	22 – 26
4XE–G6118–13	22 – 26
4XE–G6118–14	22 – 26
4XE–G6118–15	22 – 26
4XE–G6118–16	22 – 26
4XE–G6118–17	22 – 26
4XE–G6118–18	22 – 26
4XE–G6118–19	22 – 26
4XE–G6118–20	22 – 26
4XE–G6118–21	22 – 26
5ND–G6151–01	22 – 2
5ND–G6152–00	22 – 16
5FU–G6156–00	22 – 23
5FU–G6157–10	22 – 28
5FU–G6157–15	22 – 28
5FU–G6157–20	22 – 28
5FU–G6157–30	22 – 28
5FU–G6157–40	22 – 28
5FU–G6157–50	22 – 28
5ND–G6172–10	22 – 30
4XE–G6513–00	30 – 34
5TE–G6540–12	21 – 2
5UH–H1318–00	40 – 8
5TE–H2100–00	40 – 16
3D5–H2115–00	40 – 20
5UH–H2116–00	40 – 21
5TE–H2128–01	40 – 17
3C2–K7173–00	17 – 36
JJ3–K818M–00	17 – 38
8CR–W0041–00	32 – 2
3GD–W0045–00	29 – 9
	29 – 16
3GD–W0047–00	29 – 7
	29 – 14
1UY–W0048–50	29 – 8
	29 – 15

PART NO.	REF. NO.
3GD–W0057–00	29 – 6
	29 – 13
5UH–W1141–00	3 – 2
5UH–W1142–00	3 – 3
5VH–WF536–00	30 – 18
5GT–Y4612–00	22 – 7
90101–06053	37 – 7
	37 – 15
90101–06824	30 – 21
90101–10016	5 – 7
90101–10017	3 – 15
90105–05016	6 – 7
90105–06081	10 – 22
90105–08150	15 – 7
90105–08161	29 – 19
90105–088A4	30 – 35
90105–10136	1 – 15
90105–10137	1 – 14
90105–10193	17 – 13
90105–10267	24 – 12
90105–10284	17 – 17
90105–10287	30 – 48
90105–10841	24 – 16
90105–12057	21 – 6
90105–12803	23 – 2
90105–14003	16 – 9
90109–06172	17 – 37
	17 – 43
90109–06262	33 – 21
90109–06576	39 – 5
90109–06865	40 – 7
90109–08076	18 – 2
90109–08082	29 – 2
	29 – 4
90110–05201	18 – 9
	20 – 2
90110–06007	20 – 4
90114–10014	28 – 15
	28 – 33
90116–06041	1 – 6
90116–10593	22 – 3
90119–06157	19 – 3
90119–06244	33 – 28
90119–06246	7 – 27
90119–06883	26 – 11
	26 – 15
90119–08114	15 – 19
90123–08046	39 – 10

PART NO.	REF. NO.
90149–04278	31 – 7
90149–05299	33 – 22
90149–06108	26 – 8
90149–06280	17 – 35
90149–08013	15 – 4
90151–06010	26 – 21
90151–06023	10 – 11
90157–04006	13 – 23
90170–08358	16 – 19
90170–16326	3 – 30
90170–36279	13 – 38
90171–12001	24 – 7
	25 – 20
90171–16002	28 – 18
	28 – 36
	30 – 45
90179–06668	9 – 9
90179–08148	39 – 11
90179–10022	28 – 4
	28 – 23
	30 – 9
	30 – 15
90179–16005	13 – 29
	13 – 39
90179–16006	15 – 16
90179–22005	13 – 12
90179–22015	15 – 6
90179–65305	15 – 11
90183–050A8	18 – 8
	20 – 3
90185–10012	24 – 13
	24 – 15
90185–12009	23 – 3
90185–14009	25 – 13
90201–047R9	13 – 24
90201–05042	33 – 23
90201–06036	16 – 16
90201–06078	37 – 8
	37 – 16
90201–06090	26 – 13
90201–06095	10 – 23
90201–08066	33 – 14
90201–08070	7 – 4
90201–10035	30 – 49
90201–10036	22 – 39
90201–10038	3 – 14
90201–10056	9 – 26
90201–10118	32 – 21

PART NO.	REF. NO.
90201–10128	1 – 16
90201–10591	5 – 8
90201–12049	23 – 6
90201–12172	10 – 7
	40 – 13
90201–132G5	16 – 13
90201–14021	25 – 12
90201–14023	33 – 9
90201–15701	16 – 3
90201–166R6	15 – 15
90201–16804	28 – 17
	28 – 35
	30 – 44
90201–17013	14 – 13
90201–190T7	13 – 28
90201–20278	14 – 11
90201–21015	14 – 9
90201–25290	12 – 4
90202–05193	26 – 7
90206–12001	4 – 10
90209–06012	6 – 24
90209–33253	3 – 7
90215–06162	1 – 10
90215–16258	3 – 29
90240–08005	33 – 13
90240–12092	23 – 4
90249–12008	31 – 24
	33 – 12
90267–489U9	33 – 20
90269–05055	16 – 23
90269–06800	11 – 39
90269–08813	11 – 40
	18 – 5
90280–05048	3 – 13
90282–05013	3 – 28
90336–28053	25 – 5
90338–08226	40 – 3
90338–09801	19 – 2
90340–14029	10 – 12
	22 – 24
90340–14046	22 – 13
90340–14117	11 – 11
90387–06113	6 – 23
90387–0613B	16 – 12
90387–066J1	26 – 10
90387–072Y2	18 – 12
90387–07391	38 – 8
90387–07598	26 – 14

PART NO.	REF. NO.
90387–07598	37 – 6
	37 – 14
90387–090R0	25 – 11
90387–10636	9 – 28
90387–16547	2 – 4
90387–255H9	22 – 9
90387–284T0	30 – 37
90388–10001	11 – 26
90401–10015	32 – 20
90401–20145	6 – 12
90430–06192	1 – 5
90430–10148	40 – 5
90430–14043	6 – 14
90430–14194	16 – 10
90430–14240	1 – 13
90445–07807	30 – 50
90445–07810	22 – 40
90445–088C5	26 – 18
90450–47002	7 – 5
90450–56008	7 – 25
90450–58002	7 – 22
	7 – 23
90450–64002	11 – 38
90460–85277	21 – 10
90461–08134	11 – 41
90464–10833	40 – 59
90464–12830	40 – 43
	40 – 55
	40 – 58
	40 – 61
90464–16006	40 – 49
90464–25800	40 – 44
	40 – 47
	40 – 48
	40 – 50
90464–31827	40 – 45
	40 – 52
	40 – 56
	40 – 57
	40 – 62
	40 – 63
90464–39800	1 – 23
90464–40825	40 – 46
	40 – 51
90464–48800	40 – 53
	40 – 54
	40 – 60
90464–51800	40 – 42

PART NO.	REF. NO.
90465–08127	11 – 10
90467–07029	22 – 41
90467–070A0	30 – 51
90467–100A1	26 – 17
90467–140A4	1 – 22
90467–150A2	16 – 27
90467–160A4	11 – 30
90480–01400	26 – 12
90480–10517	17 – 31
90480–13004	17 – 34
90480–13018	11 – 22
90480–14102	37 – 5
	37 – 13
90480–14555	38 – 7
90480–15235	6 – 22
	18 – 10
90480–18290	26 – 9
90501–101A7	6 – 9
90501–10353	16 – 8
90501–10782	31 – 23
	33 – 11
90501–22721	3 – 9
90501–580A0	13 – 35
90506–07135	21 – 9
90506–12403	33 – 29
90506–16482	30 – 29
90508–35764	16 – 14
90560–30325	28 – 11
	28 – 29
91312–05012	11 – 5
	35 – 4
91312–06020	1 – 29
91312–06025	1 – 25
91312–06030	2 – 7
91312–08016	12 – 6
91312–08025	7 – 3
91312–08050	1 – 17
91402–20020	33 – 15
91402–20025	25 – 14
91402–25020	24 – 8
	25 – 21
	30 – 28
91402–30025	23 – 7
91402–30030	28 – 19
	28 – 37
	30 – 46
91A20–07014	7 – 8
92502–06030	35 – 2

PART NO.	REF. NO.
92902–04100	8 – 33
92902–05600	31 – 18
92902–06600	5 – 19
	35 – 3
	40 – 10
92902–08600	22 – 21
92907–04600	8 – 34
92907–05100	39 – 17
92907–06100	39 – 8
93101–12168	10 – 16
93101–31167	13 – 16
93101–35097	15 – 13
	30 – 14
93101–38098	22 – 12
93101–52116	22 – 5
93102–15212	16 – 2
93102–25081	17 – 20
93102–25099	17 – 21
93102–28476	11 – 3
93102–32483	13 – 6
93102–42004	14 – 5
93102–65386	22 – 17
93104–09025	31 – 11
93104–41119	13 – 32
93106–38046	28 – 9
	28 – 27
93106–38047	28 – 10
	28 – 28
93106–47040	30 – 12
93112–31011	25 – 7
93210–08561	6 – 19
93210–09165	4 – 12
93210–14299	14 – 16
93210–14369	11 – 12
93210–16290	11 – 44
93210–17003	5 – 2
	14 – 15
93210–18322	2 – 5
93210–19026	11 – 14
93210–26606	30 – 38
93210–27666	28 – 16
	28 – 34
93210–44545	7 – 2
	13 – 33
93210–57634	1 – 28
93210–59531	22 – 11
93210–76800	22 – 29
93210–78544	15 – 17

PART NO.	REF. NO.
93210–86509	2 – 3
93211–06635	1 – 24
93211–51749	22 – 19
93211–52001	13 – 21
93306–00401	14 – 2
93306–00438	5 – 4
93306–00502	5 – 5
93306–00612	3 – 25
93306–006Y2	28 – 8
	28 – 26
93306–008Y0	30 – 10
93306–07801	11 – 2
93306–20120	10 – 15
93306–20306	14 – 18
93306–203YN	17 – 19
93306–20402	3 – 26
93306–20464	14 – 17
93306–20532	15 – 2
93306–20601	14 – 3
93306–20715	15 – 12
93306–278Y0	30 – 13
93306–30538	15 – 10
93306–305Y6	22 – 8
93306–30611	3 – 16
93310–420F2	14 – 12
93310–633P5	3 – 5
93311–42077	14 – 25
93315–21813	13 – 9
93316–01003	13 – 5
93316–013Y0	22 – 18
93317–855Y9	22 – 6
93399–99926	22 – 33
	22 – 36
93410–22039	22 – 31
93410–32826	24 – 3
	24 – 6
93410–46079	13 – 8
93430–10015	33 – 8
93440–12052	1 – 3
93440–14155	14 – 24
93440–15012	16 – 4
93440–20088	22 – 34
	22 – 37
93440–25084	14 – 21
93450–19095	3 – 21
	3 – 23
93450–24062	13 – 10
93503–08007	16 – 7

PART NO.	REF. NO.
93505–16006	6 – 8
93603–14240	14 – 23
93604–10011	5 – 3
93605–10090	3 – 10
93900–00813	28 – 3
	28 – 22
	30 – 3
	30 – 6
94108–12808	28 – 2
	28 – 21
94110–12804	30 – 2
	30 – 5
94591–54034	14 – 19
94591–87110	5 – 10
94701–00333	1 – 30
95022–06008	40 – 28
95022–06012	1 – 20
	6 – 5
	10 – 18
	11 – 42
95022–06014	1 – 4
95022–06025	5 – 17
	6 – 3
	11 – 16
	36 – 12
95022–06030	11 – 9
	13 – 14
95022–06050	10 – 3
	11 – 8
95022–06070	10 – 5
95022–08045	10 – 4
95022–12040	10 – 6
95302–06600	38 – 6
95302–08700	16 – 20
95307–05700	31 – 10
95312–06700	33 – 6
95602–10200	17 – 6
	17 – 14
	17 – 18
95602–12200	21 – 7
95606–06100	32 – 9
95607–05100	31 – 9
95607–06100	39 – 6
9560L–06200	30 – 22
95702–05300	33 – 24
95702–10500	21 – 4
	22 – 38
95802–06020	6 – 25

PART NO.	REF. NO.
95802–06020	40 – 15
	40 – 19
95802–06025	18 – 11
	32 – 22
95802–08012	21 – 13
9580P–06035	9 – 18
95812–06010	17 – 30
95812–06016	9 – 7
95812–06020	9 – 8
95812–06035	16 – 17
95812–08012	17 – 4
	17 – 10
	33 – 2
	33 – 4
	34 – 2
	34 – 4
95812–08025	17 – 25
95812–08030	25 – 4
95812–10020	21 – 3
95812–10025	22 – 22
95812–10080	17 – 11
95812–10110	17 – 5
95822–06012	10 – 9
	28 – 39
	30 – 32
	32 – 17
	32 – 19
95822–06020	11 – 25
95822–06030	10 – 19
	11 – 20
95822–08020	17 – 28
95822–10040	9 – 25
97002–06012	1 – 9
97002–06020	40 – 9
97012–06020	33 – 7
97022–06016	5 – 18
97022–08025	22 – 20
97022–08060	25 – 9
97702–40620	38 – 5
97702–60420	40 – 2
98501–04014	8 – 32
98502–05020	31 – 17
98507–04006	8 – 24
98507–04008	8 – 28
98507–04014	8 – 26
98507–05020	31 – 8
98507–05030	39 – 18
98507–06020	39 – 7

PART NO.	REF. NO.
98517–05012	39 – 16
98580–04010	8 – 20
98706–04012	32 – 5
99009–32400	3 – 12
	28 – 13
	28 – 31
99009–80500	13 – 7
99530–10116	10 – 2
	10 – 20
	11 – 7
99530–14016	1 – 12
	2 – 6