YAMAHA

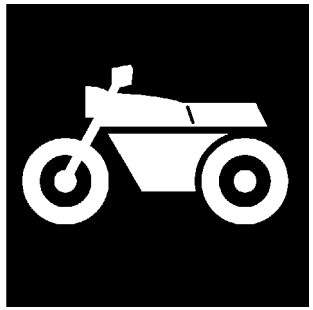

PARTS CATALOGUE
CATALOGO DE REPUESTOS

YBA125 (3P43) MEXICO

1L3P4-210S1

( )

YAMAHA
GENUINE
Parts & Accessories

YBA125
CATALOGO DE REPUESTOS
©2011 por Yamaha Motor Co., Ltd.
1ª edición, julio 2011
Todos los derechos reservados.
Toda reproducción o uso no autorizado
sin el consentimiento escrito de
Yamaha Motor Co., Ltd.
quedan expresamente prohibidos
Impreso en Japón.

YBA125
PARTS CATALOGUE
©2011 by Yamaha Motor Co., Ltd.
1st edition, July 2011
All rights reserved.
Any reprinting or unauthorized use
without the written permission of
Yamaha Motor Co., Ltd.
is expressly prohibited.
Printed in Japan.

PROLOGO

Este catálogo de repuestos corresponde a las piezas para el o los modelos que figuran en la página de portada. Al formular el pedido de repuestos, se ruega citar este catálogo y especificar correctamente el número y el nombre de las piezas.

1. Las modificaciones y agregados que se hayan realizado después de la edición de este Catálogo de Repuestos, serán anunciados en las Informaciones de Recambios.
   Es recomendable que se hagan las correcciones necesarias en el Catálogo de Repuestos de acuerdo con las Informaciones de Recambios.

2. Abreviaciones
   En este. Catálogo de Repuestos se emplean las siguientes abreviaciones.

   "UR" Usar el número de partes especificado
   "UN" Usar la cantidad necesaria
   "AP" Piezas sustitutivas
   "LM" Fabricación local (Hay que pedir los repuestos en las cercanías)
   "F#" Nº de bastidor (Nº aplicable a la máquina)
   "O/S" Sobredimensionado

3. La cantidad de componentes para el montaje
   - Los componentes, suministrados como conjunto, se describen con un punto (.) que precede al nombre del parte como se indica a continuación.
   - La numeración que aparece a la derecha de cada descripción indica la cantidad de partes por cada unidad de conjunto.

CODIGO Nº	DESCRIPCION	CANT.	OBSERVACIONES
2F5–83310–60	ENSAMBLAJE DE LA LUZ	2	
115–83311–60	.BOMBILLA (6V–18W)	1	

4. Los colores de los componentes se indican como sigue en la columna de "OBSERVACIONES".

CODIGO Nº	DESCRIPCION	CANT.	OBSERVACIONES
2N4–24110–00–X5	COMP. DEL TANQUE	2	MXR
3J1–24240–10	.GRAFICO, DEL TANQUE	1	PARA MXR

5. Debe tenerse en cuenta que las ilustraciones sirven como guia para la búsqueda de los números de partes y no deben usarse para el montaje. Durante el montaje, se recomienda usar el manual de taller correspondiente.

6. EL asterisco (*) antes del número de referencia indica los elementos modificados después de la primera edición.

FOREWORD

This Parts Catalogue is related to the parts for the model(s) on the cover page. When you are ordering replacement parts, please refer to this Parts Catalogue and quote both part numbers and part names correctly.

1. Modifications or additions which have been made after the issue of the Parts Catalogue will be announced in the Parts News.
   It is advisable that you make the necessary corrections to the Parts Catalogue according to the Parts News.

2. Abbreviations
   The following abbreviations are used in this Parts Catalogue.

   “UR” Use specified parts number.
   “UN” Use as many as needed.
   “AP” Alternate Parts
   “LM” Locally Made (Parts need to be ordered locally)
   “F#” Frame No. (Applicable machine No.)
   “O/S” Over Size

3. The number of components for assembly
   - Parts, which are to be supplied in an assembly, are listed with a dot (.) in front of the part name as shown below.
   - The numeral appearing to the right of each component part indicates the quantity of parts for each assembly unit.

PART NO.	DESCRIPTION	Q’TY	REMARKS
2F5–83310–60	FRONT FLASHER LIGHT ASSY	2	
115–83311–60	.BULB (6V–18W)	1	

4. Applicable colours of graphics are represented in the “REMARKS” as shown below.

PART NO.	DESCRIPTION	Q’TY	REMARKS
2N4–24110–00–X5	FUEL TANK COMP.	2	MXR
3J1–24240–10	.GRAPHIC, FUEL TANK	1	FOR MXR

5. Note that the illustrations for reference in finding parts numbers are not to be used for assembling. When assembling, please use the applicable service manual.

6. The asterisk (*) before a reference number indicates modified items after the first edition.

7. Números de serie

Nº de Serie del bastidor

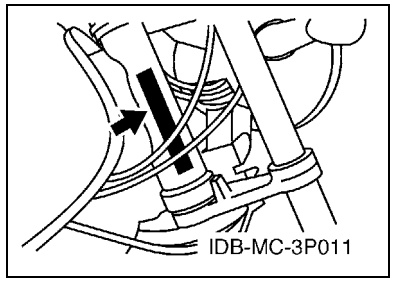

Nº de Serie del motor

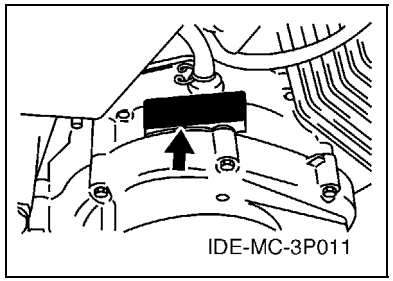

8. Códigos de color aplicables (El símbolo (*) muestra el color de modelo.)

Abreviatura	Nombre de color	Código de color
BG(*)	BLACK GOLD	00H9
LYNM9(*)	LIGHT YELLOWISH GRAY ME 9	0752
VRC7(*)	VIVID RED COCKTAIL 7	0580

9. Nº de serie inicial aplicable

Nº de Serie del bastidor

Nº de serie	Nombre de la columna de cantidades	Código de Modelo

Nº de Serie del motor

Nº de serie	Nombre de la columna de cantidades	Código de Modelo

7. Applicable Serial No.

Frame Serial No.

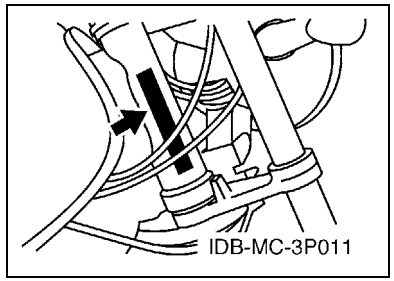

Engine Serial No.

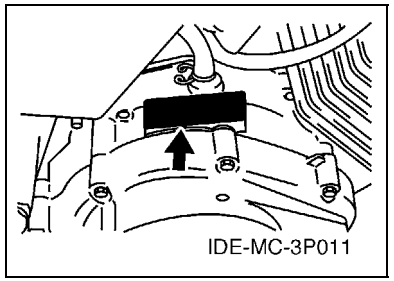

8. Applicable Colour Code (The (*) mark shows Model colour.)

Abbreviation	Colour Name	Colour Code
BG(*)	BLACK GOLD	00H9
LYNM9(*)	LIGHT YELLOWISH GRAY ME 9	0752
VRC7(*)	VIVID RED COCKTAIL 7	0580

9. Applicable Starting Serial No.

Frame Serial No.

Serial No.	Name Of Q'ty Column	Model Code

Engine Serial No.

Serial No.	Name Of Q'ty Column	Model Code

CONTENIDO

MOTOR

CILINDRO 1
CIGUENAL & PISTON 3
VALVULA 4
ARBOL DE LEVAS & CADENA 5
BOMBA DE ACEITE 6
ADMISION 7
CARBURADOR 8
DESCARGA 10
CARTER 11
CUBIERTA DE CARTER 1 12
ARRANQUE 13
EMBRAGUE DEL ARRANQUE 14
EMBRAGUE 15
TRANSMISION 16
LEVA DE CAMBIO & HORQUILLA 17
EJE DE CAMBIO & PEDAL 18

SHASIS

CUADRO 19
GUARDABARRO 20
CUBIERTA LATERAL 23
BRAZO TRASERO & SUSPENSION 24
DIRECCION 25
HORQUILLA DELANTERA 27
DEPOSITO DE COMBUSTIBLE 29
ASIENTO 30
RUEDA DELANTERA 31
CALIBRE FRENO DELANTERA 32
RUEDA TRASERA 33
MANILLAR & CABLE 35
CILINDRO MAESTRO DELANTERO 36
SOPORTE & APOYAPIE 37
GENERADOR 39
MOTOR DE ARRANQUE 40
LUZ DE DESTELLADOR 41
MEDIDOR 42
FARO DELANTERO 43
LUZ DE COLA 44
INTERRUPTOR DE MANILLAR&PALANC 45
EQUIPO ELECTRICO 1 46
EQUIPO ELECTRICO 2 47

INDICE

INDICE NUMERICO 48

CONTENTS

ENGINE

CYLINDER 1
CRANKSHAFT & PISTON 3
VALVE 4
CAMSHAFT & CHAIN 5
OIL PUMP 6
INTAKE 7
CARBURETOR 8
EXHAUST 10
CRANKCASE 11
CRANKCASE COVER 1 12
STARTER 13
STARTER CLUTCH 14
CLUTCH 15
TRANSMISSION 16
SHIFT CAM & FORK 17
SHIFT SHAFT 18

CHASSIS

FRAME 19
FENDER 20
SIDE COVER 23
REAR ARM & SUSPENSION 24
STEERING 25
FRONT FORK 27
FUEL TANK 29
SEAT 30
FRONT WHEEL 31
FRONT BRAKE CALIPER 32
REAR WHEEL 33
STEERING HANDLE & CABLE 35
FRONT MASTER CYLINDER 36
STAND & FOOTREST 37
GENERATOR 39
STARTING MOTOR 40
FLASHER LIGHT 41
METER 42
HEADLIGHT 43
TAILLIGHT 44
HANDLE SWITCH & LEVER 45
ELECTRICAL 1 46
ELECTRICAL 2 47

INDEX

NUMERICAL INDEX 48

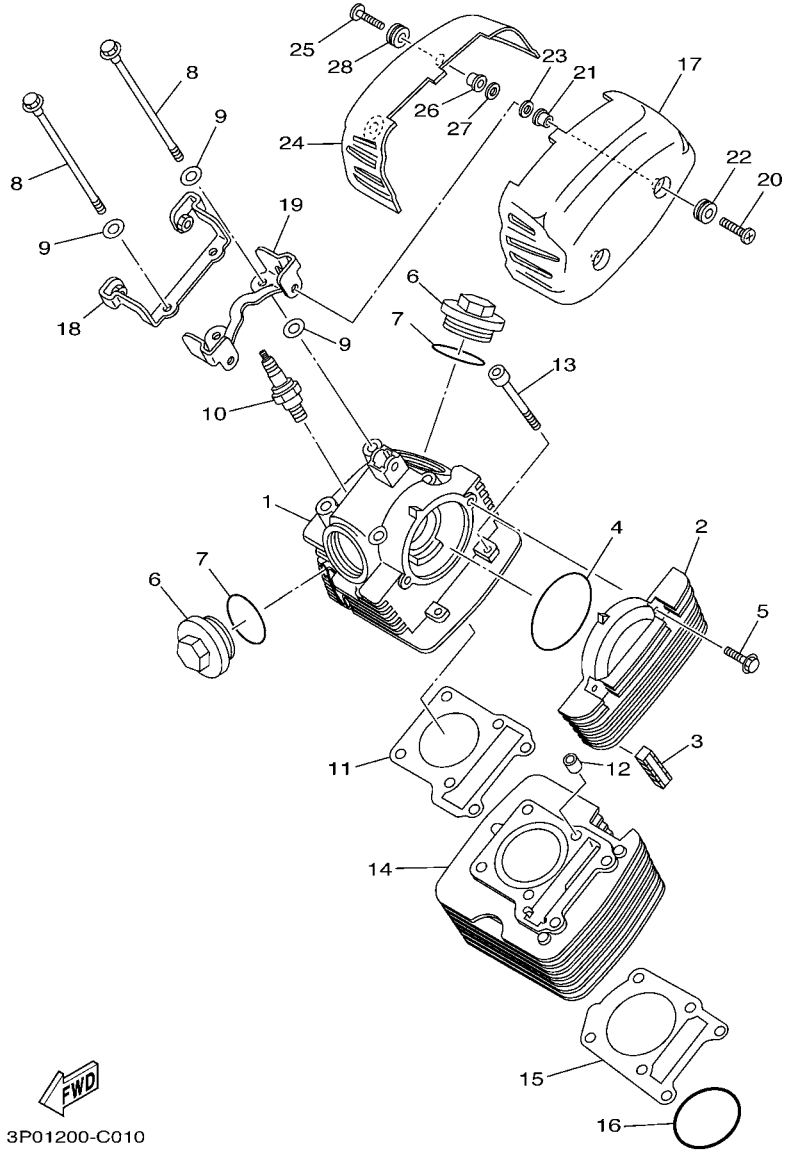

FIG. 1 CILINDRO — CYLINDER

REF. Nº	CODIGO Nº PART NO.	DESCRIPCION DESCRIPTION	3P43					OBSERVACIONES REMARKS
1	4LS–E1111–01	CULATA CILINDRO 1 HEAD, CYLINDER 1	1					
2	4LS–E1185–00	CUBIERTA CULATA CIL.LAT.3 COVER, CYLINDER HEAD SIDE 3	1					
3	4LS–E1161–00	AMORTIGUADOR 1 ABSORBER 1	10					
4	93210–71462	ANILLO O O-RING	1					
5	95027–06020	PERNO, DE BRIDA BOLT, FLANGE	2					
6	4LS–E1186–00	CUBIERTA CULATA CIL.LAT.1 COVER, CYLINDER HEAD SIDE 1	2					
7	93210–44889	ANILLO O O-RING	2					
8	90105–08894	TORNILLO BOLT, FLANGE	4					
9	90201–08609	ARANDELA PLANA WASHER, PLATE	8					
10	94700–00834	BUJIA (NGK CR7HSA) PLUG, SPARK (NGK CR7HSA)	1					
11	4LS–E1181–00	JUNTA, DE CULATA 1 GASKET, CYLINDER HEAD 1	1					
12	91810–14804	PASADOR DE CLAVIJA PIN, DOWEL	2					
13	90110–06850	TORNILLO ALLEN BOLT, HEXAGON SOCKET HEAD	2					
14	4LS–E1310–01	CILINDRO CYLINDER	1					
15	5YY–E1351–00	JUNTA, DE CILINDRO GASKET, CYLINDER	1					
16	93210–57897	ANILLO O O-RING	1					
17	5US–E1191–00	TAPA CULATA DE CILINDRO 1 COVER, CYLINDER HEAD 1	1					
18	5US–E1142–10	SOPORTE DE CULATA DE CINDRO CU BRACKET, CYLINDER HEAD COVER 2	1					
19	5US–E1152–00	SOPORTE DE CULATA DE CINDRO CU BRACKET, CYLINDER HEAD COVER	1					
20	90154–06061	TORNILLO DE LIGAR SCREW, BINDING	2					
21	90560–06201	SEPARADOR SPACER	2					
22	90480–13018	TAPON GROMMET	2					
23	90202–06239	ARANDELA DE PLANA WASHER, PLATE	2					
24	5US–E1192–00	TAPA CULATA DE CILINDRO 2 COVER, CYLINDER HEAD 2	1					
25	90154–06061	TORNILLO DE LIGAR SCREW, BINDING	2					
26	90560–06201	SEPARADOR SPACER	2					
27	90202–06239	ARANDELA DE PLANA WASHER, PLATE	2					

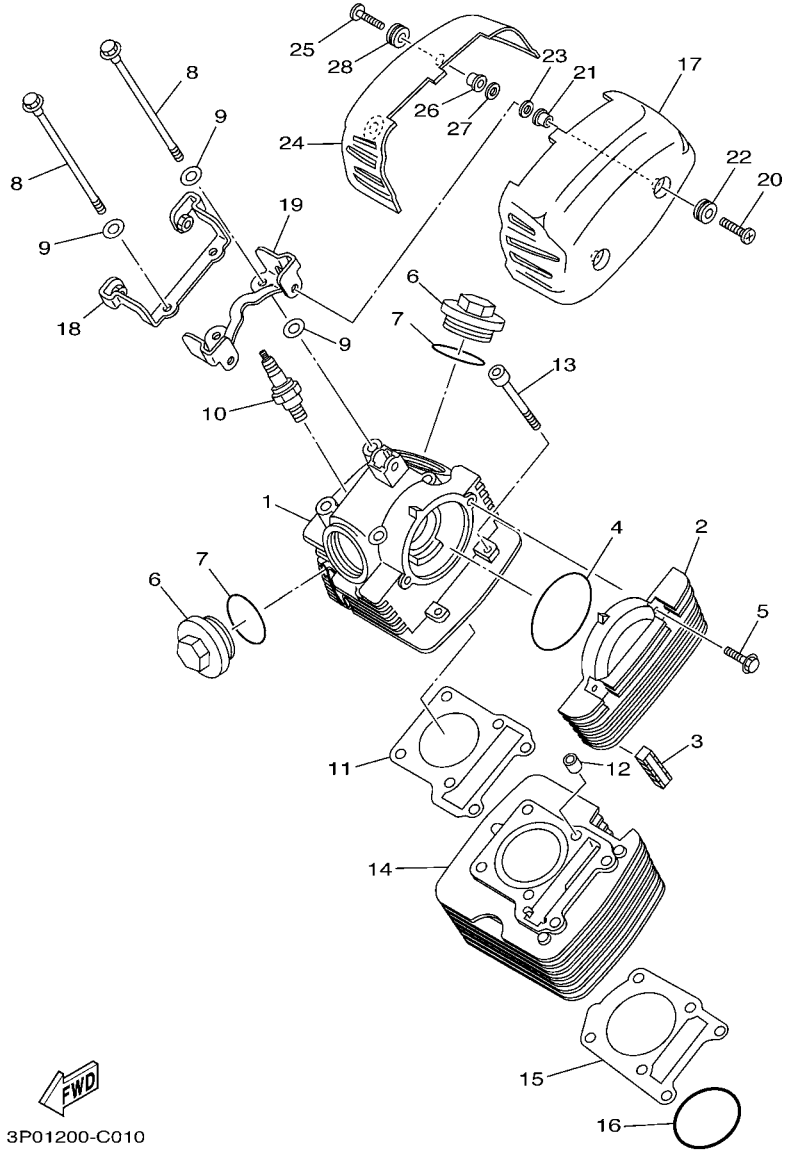

FIG. 1 CILINDRO — CYLINDER

REF. Nº	CODIGO Nº PART NO.	DESCRIPCION DESCRIPTION	3P43					OBSERVACIONES REMARKS
28	90480–13018	TAPON GROMMET	2					

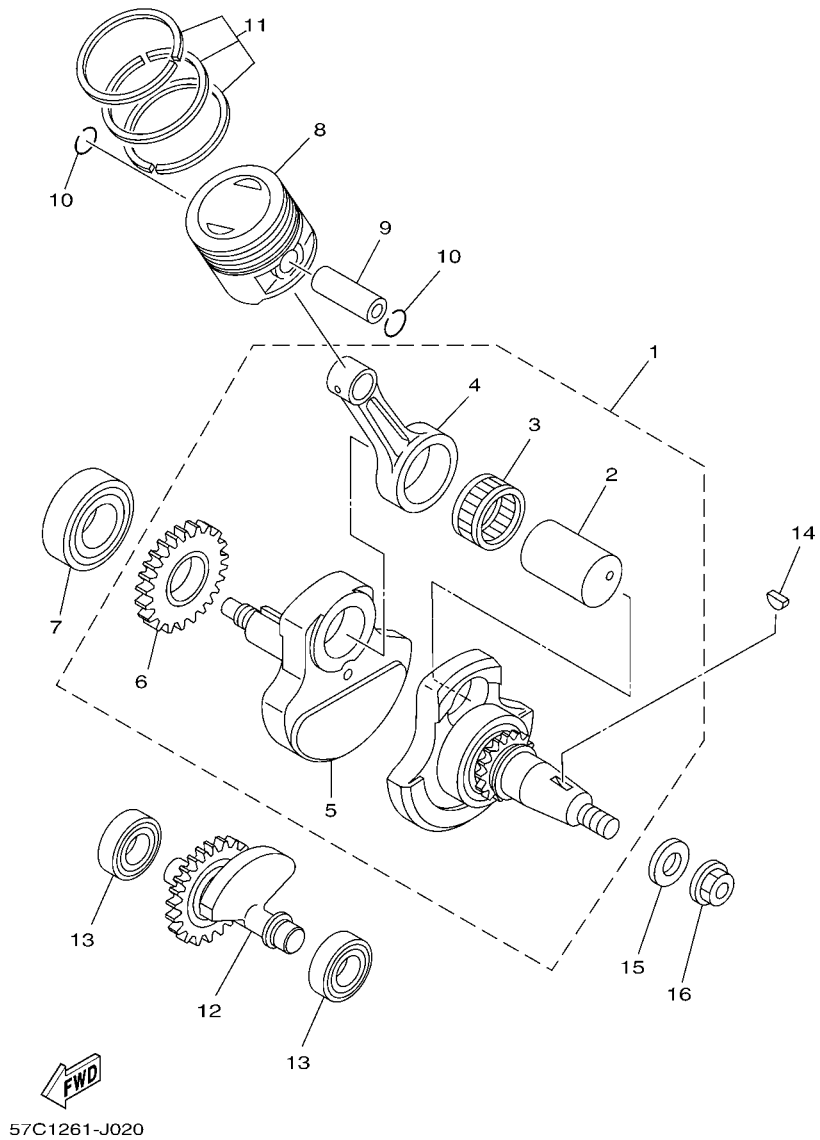

FIG. 2 CIGUENAL & PISTON — CRANKSHAFT & PISTON

REF. Nº	CODIGO Nº PART NO.	DESCRIPCION DESCRIPTION	3P43					OBSERVACIONES REMARKS
1	5US–E1400–00	CIGUENAL COMPLETO CRANKSHAFT ASSY	1					
2	4LS–E1681–00	.PASADOR MANIVELA 1 .PIN, CRANK 1	1					
3	93310–629X4	.COJINETE DE RODILLOS .BEARING	1					
4	4LS–E1651–01	.BIELA .ROD, CONNECTING	1					
5	4LS–E1422–00	.MANIVELA 2 .CRANK 2	1					
6	4LS–E1536–00	.ENGRANAJE TRACCION .GEAR, DRIVE	1					
7	93306–205X3	COJINETE BEARING	1					
8	4LS–E1631–01	PISTON (NORMA) PISTON (STD)	1					
	4LS–11636–00	PISTON (0.50MM O/S) PISTON (0.50MM O/S)	1					AP AP
	4LS–11638–00	PISTON (1.00MM O/S) PISTON (1.00MM O/S)	1					AP AP
9	2TK–11633–00	PASADOR, PISTON PIN, PISTON	1					
10	93450–16812	SEGURO CIRCLIP	2					
11	4LS–11603–00	JUEGO DE ANILLOS (NORMA) PISTON RING SET (STD)	1					
	4LS–11605–00	JUEGO DE ANILLOS (0.50MM O/S) PISTON RING SET (0.50MM O/S)	1					AP AP
	4LS–11607–00	JUEGO DE ANILLOS (1.00MM O/S) PISTON RING SET (1.00MM O/S)	1					AP AP
12	4LS–E1500–02	COMPENSADOR COMPLETA BALANCER ASSY	1					
13	93306–202YD	COJINETE BEARING	2					
14	90280–03017	CUNA WOODRUFF KEY, WOODRUFF	1					
15	90201–122H1	ARANDELA PLANA WASHER, PLATE	1					
16	95707–12500	TUERCA DE BRIDA NUT, FLANGE	1					

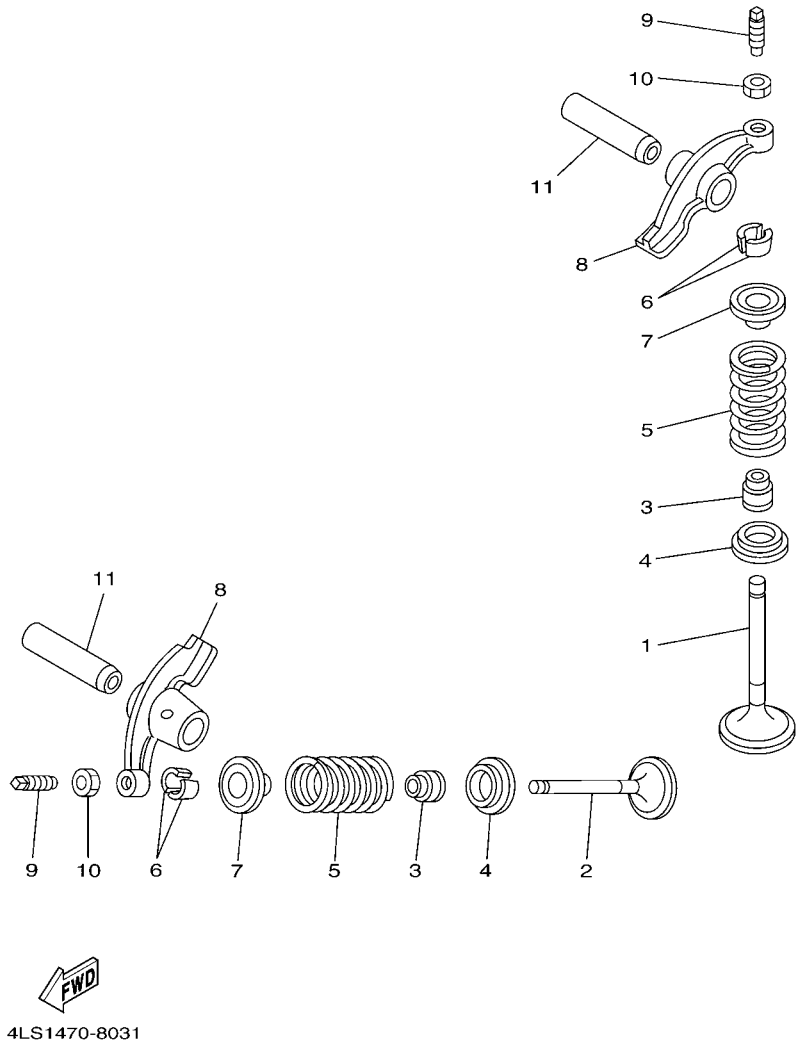

FIG. 3 VALVULA VALVE

REF. Nº	CODIGO Nº PART NO.	DESCRIPCION DESCRIPTION	3P43					OBSERVACIONES REMARKS
1	4LS–E2111–10	VALVULA DE ADMISION VALVE, INTAKE	1					
2	4LS–E2121–10	VALVULA DE ESCAPE VALVE, EXHAUST	1					
3	4LS–E2119–00	SELLO DE ACEITE VALVULA SEAL, VALVE STEM	2					
4	4LS–E2116–00	ASIENTO RESORTE DE VALVULA SEAT, VALVE SPRING	2					
5	5YY–E2113–00	RESORTE VALVULA INTERNA SPRING, VALVE INNER	2					
6	4LS–E2118–00	SEGURO DE VALVULA COTTER, VALVE	4					
7	4LS–E2117–00	RETEN RESORTE DE VALVULA RETAINER, VALVE SPRING	2					
8	5YY–E2151–00	BRAZO DE BALANCIN DE VALVULA ARM, VALVE ROCKER	2					
9	4LS–E2159–01	TORNILLO DE AJUSTE DE VALVULA SCREW, VALVE ADJUSTING	2					
10	90170–05302	TUERCA NUT	2					
11	4LS–E2156–00	EJE DE BALANCIN SHAFT, ROCKER 2	2					

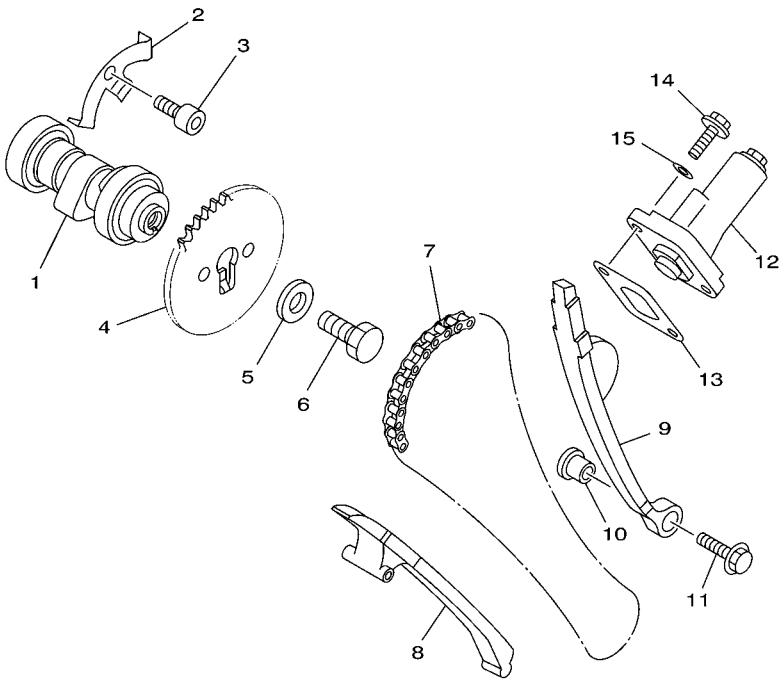

FIG. 4 ARBOL DE LEVAS & CADENA CAMSHAFT & CHAIN

REF. Nº	CODIGO Nº PART NO.	DESCRIPCION DESCRIPTION	3P43					OBSERVACIONES REMARKS
1	4LS–E2170–00	ARBOL DE LEVAS COMPLETO 1 CAMSHAFT ASSY 1	1					
2	4LS–E111F–00	PLACA PLATE	1					
3	90110–06810	TORNILLO ALLEN BOLT, HEXAGON SOCKET HEAD	1					
4	4LS–E2176–01	CATALINA DE CADENA SPROCKET, CAM CHAIN	1					
5	90201–08326	ARANDELA PLANA WASHER, PLATE	1					
6	90101–08590	TORNILLO BOLT	1					
7	94580–25088	CADENA CHAIN	1					
8	4LS–E2231–00	TOPE DE GUIA 1 GUIDE, STOPPER 1	1					
9	4LS–E2241–10	TOPE DE GUIA 2 GUIDE, STOPPER 2	1					
10	4LS–E5598–00	COLLAR COLLAR	1					
11	90105–06812	TORNILLO BOLT, FLANGE	1					
12	4LS–E2210–10	TENSOR CADENA DE LEVA TENSIONER ASSY, CAM CHAIN	1					
13	5YY–E2213–00	EMPAQUE DE CAJA TENSOR GASKET, TENSIONER CASE	1					
14	95027–06016	PERNO, DE BRIDA BOLT, FLANGE	2					
15	90430–06817	JUNTA GASKET	2					

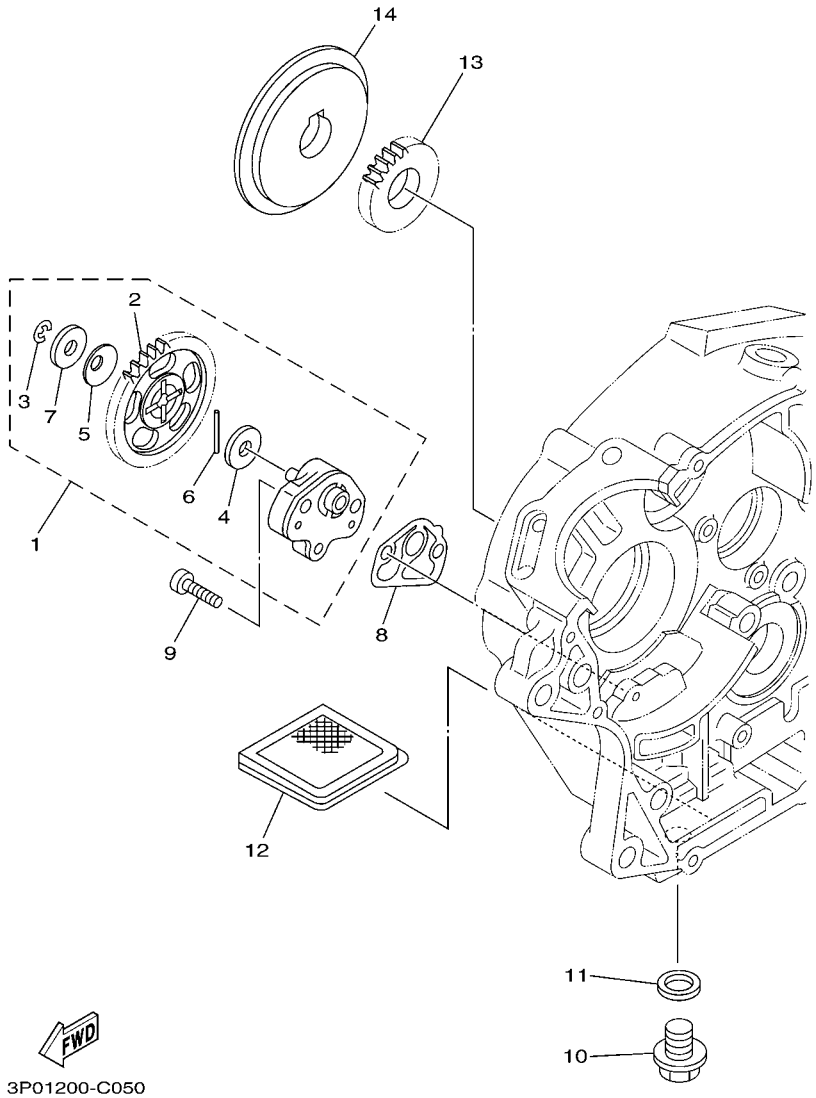

FIG. 5 BOMBA DE ACEITE OIL PUMP

REF. Nº	CODIGO Nº PART NO.	DESCRIPCION DESCRIPTION	3P43					OBSERVACIONES REMARKS
1	5YY–E3300–00	BOMBA DE ACEITE COMPLETA OIL PUMP ASSY	1					
2	5KA–E3325–20	.ENGRANAJE IMPULSOR DE BOMBA 1 .GEAR, PUMP DRIVEN	1					
3	99001–05600	.PRESILLA REDONDA .CIRCLIP	1					
4	90201–07641	.ARANDELA PLANA .WASHER, PLATE	1					
5	90208–07052	.ARANDELA DE RESORTE CONICO .WASHER, CONICAL SPRING	1					
6	93602–20800	.PASADOR DE CLAVIJA .PIN, DOWEL	1					
7	90201–07800	.ARANDELA PLANA .WASHER, PLATE	1					
8	4LS–E3329–00	EMPAQUE TAPA DE BOMBA GASKET, PUMP COVER	1					
9	90155–06002	TORNILLO CABEZA PLANA RAN. SCREW, FLAT FILLISTER	2					
10	90340–12097	TORNILLO, DE DRENAJE PLUG, STRAIGHT SCREW	1					
11	90430–12227	JUNTA GASKET	1					
12	4LS–E3411–00	FILTRO DE ACEITE STRAINER, OIL	1					
13	4LS–E3324–00	ENGRANAJE TRACC. DE BOMBA(22T) GEAR, PUMP DRIVE (22T)	1					
14	4LS–E3451–00	FILTRE ROTATIVO FILTER,ROTARY	1					

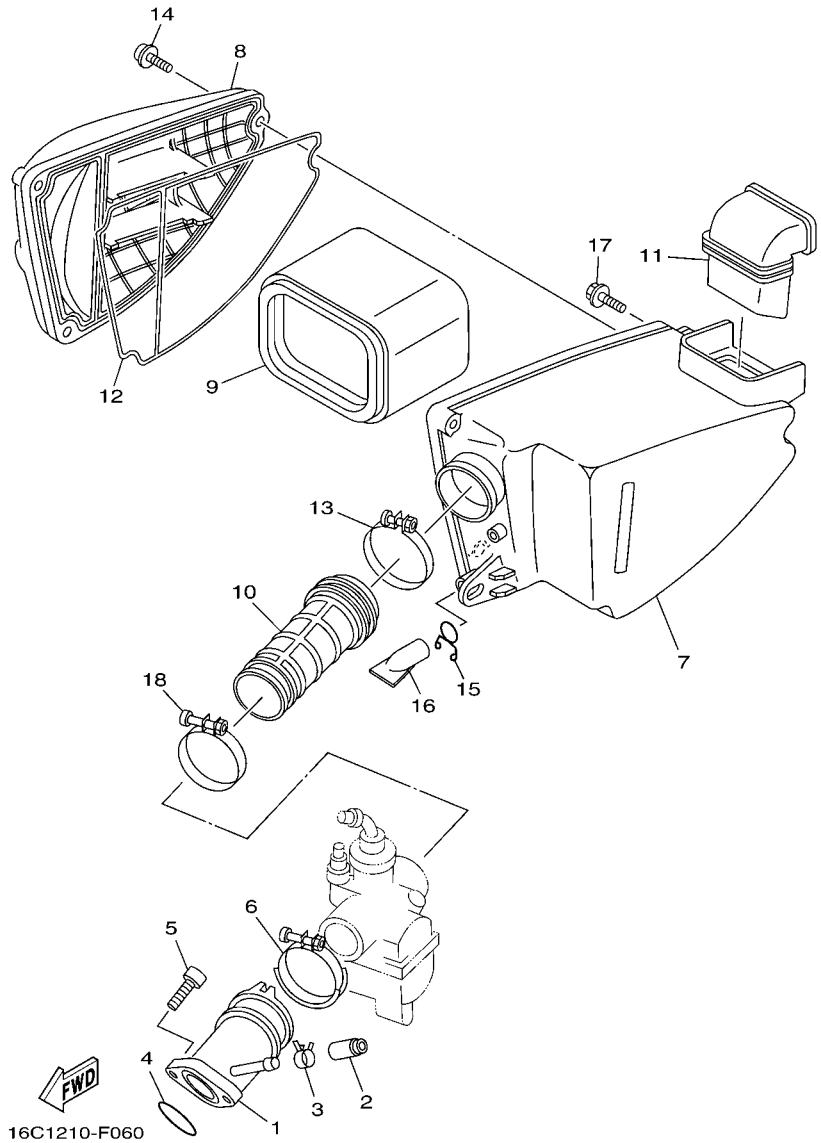

FIG. 6 ADMISION INTAKE

REF. Nº	CODIGO Nº PART NO.	DESCRIPCION DESCRIPTION	3P43					OBSERVACIONES REMARKS
1	5DG–E3586–01	TOBERA DE CARBURADOR 1 JOINT, CARBURETOR 1	1					
2	4LS–E3569–00	TAPON CIEGO PLUG, BLIND	1					
3	90467–10819	PRESILLA CLIP	1					
4	93210–30611	ANILLO O O-RING	1					
5	91317–06020	PERNO BOLT	2					
6	90450–44046	BRIDA, MANGUERA HOSE CLAMP ASSY	1					
7	3P4–E4411–00	CAJA FILTRO DEL AIRE 1 CASE, AIR CLEANER 1	1					
8	5US–E4412–00	TAPA CAJA DEL FILTRO 1 CAP, CLEANER CASE 1	1					
9	5US–E4450–00	ELEMENTO COMP.FILTRO DE AIRE ELEMENT ASSY, AIR CLEANER	1					
10	5US–E4453–00	UNION DEL FILTRO DEL AIRE 1 JOINT, AIR CLEANER 1	1					
11	5US–E4437–00	CONDUCTO DUCT	1					
12	5US–E4452–00	SELLO SEAL	1					
13	5US–E4456–00	BANDA BAND	1					
14	97607–05220	TORNILLO CAB CON PLANA C/ARAN SCREW,WITH WASHER	3					
15	90467–11106	PRESILLA CLIP	1					
16	4LS–E443E–00	TUBO, DRENAJE PIPE, DRAIN	1					
17	90119–06108	TORNILLO CON ARANDELA BOLT, WITH WASHER	2					
18	90450–45802	BRIDA, MANGUERA HOSE CLAMP ASSY	1					

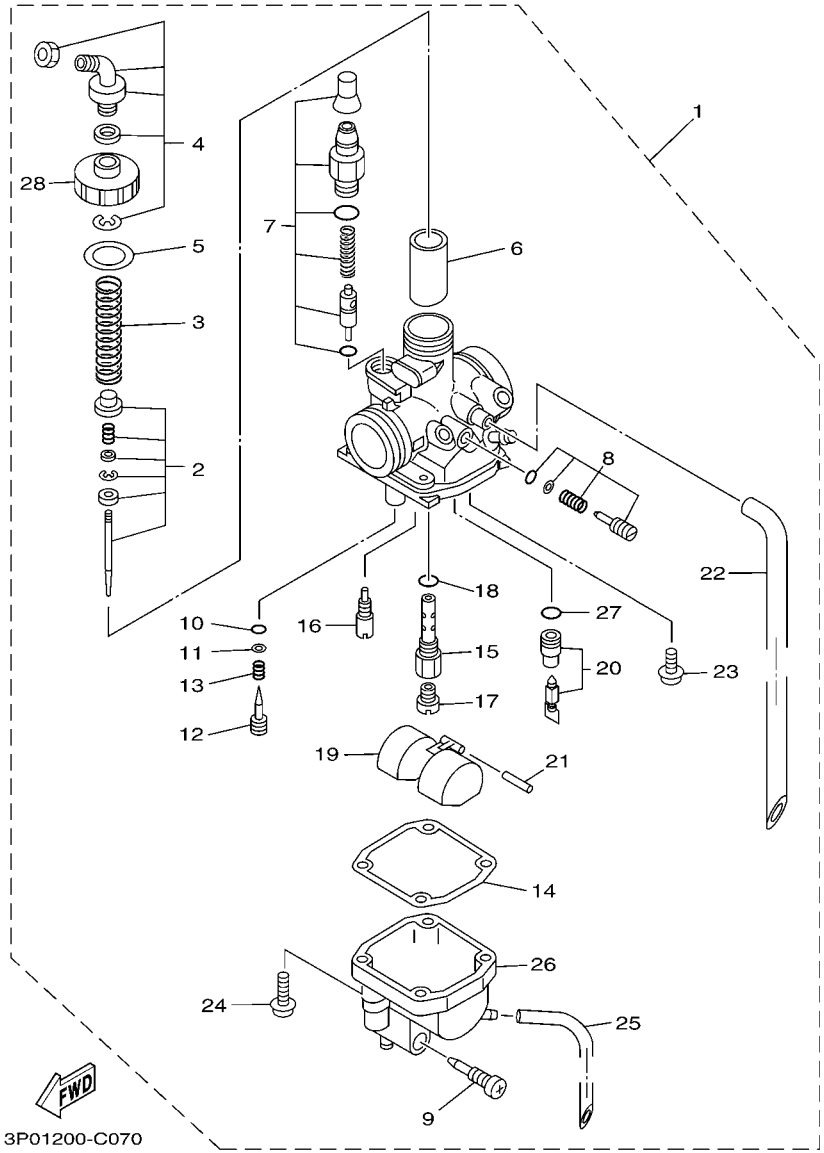

FIG. 7 CARBURADOR CARBURETOR

REF. Nº	CODIGO Nº PART NO.	DESCRIPCION DESCRIPTION	3P43					OBSERVACIONES REMARKS
1	5US–E4101–00	CARBURADOR COMPLETO 1 CARBURETOR ASSY 1	1					
2	5US–1490J–00	.CJTO. AGUJA .NEEDLE SET	1					
3	4LS–14131–00	.RESORTE VALVULA DE ACELERACION .SPRING, THROTTLE VALVE	1					
4	5DG–14106–00	.TORNILLO AJUSTADOR DE CABLE .CABLE ADJUST SCREW SET	1					
5	4LS–14126–00	.EMPAQUE .GASKET	1					
6	5HH–14112–25	.VALVULA DE ACELERACION 1 .VALVE, THROTTLE 1	1					
7	4LS–1410A–00	.JUEGO DE ARRANQUE .STARTER SET	1					
8	5HH–14103–00	.CJTO. TORNILLO DEL RALENTI .THROTTLE SCREW SET	1					
9	4LS–14191–00	.TORNILLO, DE DRENAJE .PLUG, DRAIN	1					
10	3H1–14147–00	.ANILLO O .O-RING	1					
11	3H1–14962–00	.ARANDELA .WASHER	1					
12	4LS–14923–20	.TORNILLO DE AJUSTE .SCREW, PILOT	1					
13	174–14134–00	.RESORTE AJUSTE DE VALVULA .SPRING, AIR ADJUSTING	1					
14	24W–14184–00	.JUNTA, CAMARA DE BOYA .GASKET, FLOAT CHAMBER	1					
15	4LS–14145–00	.ESPREA .SETTER, NEEDLE JET	1					
16	3H1–14142–17	.SURTIDOR DE RALENTI (# 17.5) .JET, PILOT (# 17.5)	1					
17	620–1423A–69	.ESPREA PRINCIPAL (#92.5) .JET, MAIN (#92.5)	1					
18	583–14561–00	.ANILLO O .O-RING	1					
19	5HH–14185–00	.BOYA .FLOAT	1					
20	5KA–14107–15	.VALVULA DE AGUJA .NEEDLE VALVE SET	1					
21	127–14186–00	.PASADOR DE LA BOYA .PIN, FLOAT	1					
22	4LS–14197–10	.TUBO RESPIRADERO .PIPE	1					
23	97607–03106	.TORNILLO CAB CON PLANA C/ARAN .SCREW,WITH WASHER	1					
24	97607–04114	.TORNILLO CAB CON PLANA C/ARAN .SCREW,WITH WASHER	4					
25	2AL–14196–00	.TUBO DE DRENASE .PIPE, OVER FLOW 1	1					
26	4LS–14181–00	.CUERPO DE CAMARA DE BOIA .BODY, FLOAT CHAMBER 1	1					
27	878–14147–00	.ANILLO O .O-RING	1					

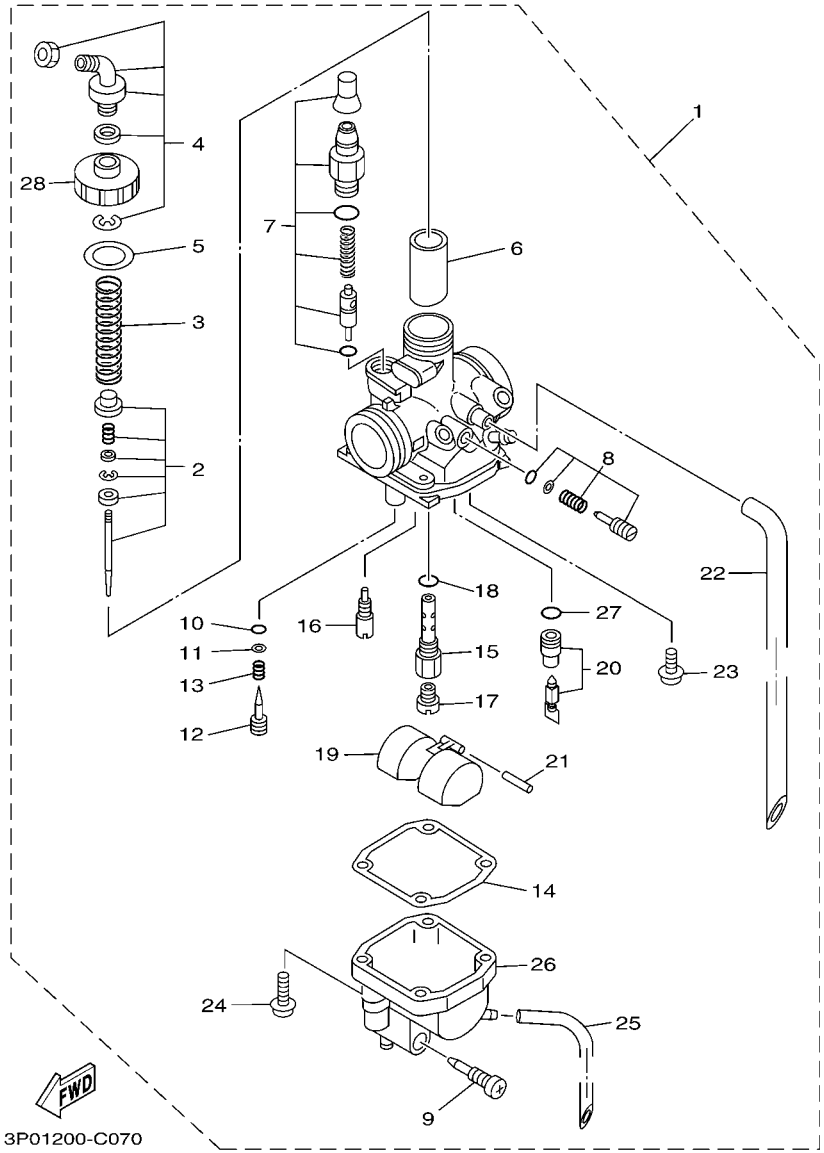

FIG. 7 CARBURADOR CARBURETOR

REF. Nº	CODIGO Nº PART NO.	DESCRIPCION DESCRIPTION	3P43					OBSERVACIONES REMARKS
28	4LS–14158–00	.TECHO DE CAMARA DE MEZCLA .TOP, MIXING CHAMBER	1					

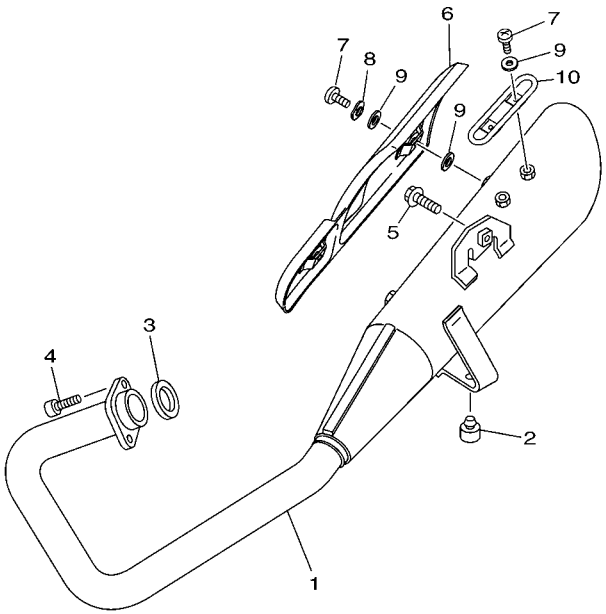

16C1210-F080

FIG. 8 DESCARGA EXHAUST

REF. Nº	CODIGO Nº PART NO.	DESCRIPCION DESCRIPTION	3P43					OBSERVACIONES REMARKS
1	5US–E4703–10	SILENCIADOR COMPL. 1 MUFFLER COMP. 1	1					
2	5US–F7114–00	TOPE DE PUNTAL PRINCIPAL STOPPER, MAIN STAND	1					
3	3AH–E4613–00	JUNTA, TUBO DE ESCAPE GASKET, EXHAUST PIPE	1					
4	91317–06020	PERNO BOLT	2					
5	95827–08020	TORNILLO BOLT, FLANGE	1					
6	5US–E4718–00	PROTECTOR DE SILENCIADOR 1 PROTECTOR, MUFFLER 1	1					
7	98980–06010	TORNILLO DE LIGAR SCREW, BIND	4					
8	90206–06090	ARANDELA ONDULADA WASHER, WAVE	2					
9	90202–05807	ARANDELA DE PLANA WASHER, PLATE	5					
10	5US–E4748–00	PROTECTOR DE SILENCIADOR 4 PROTECTOR, MUFFLER 4	1					

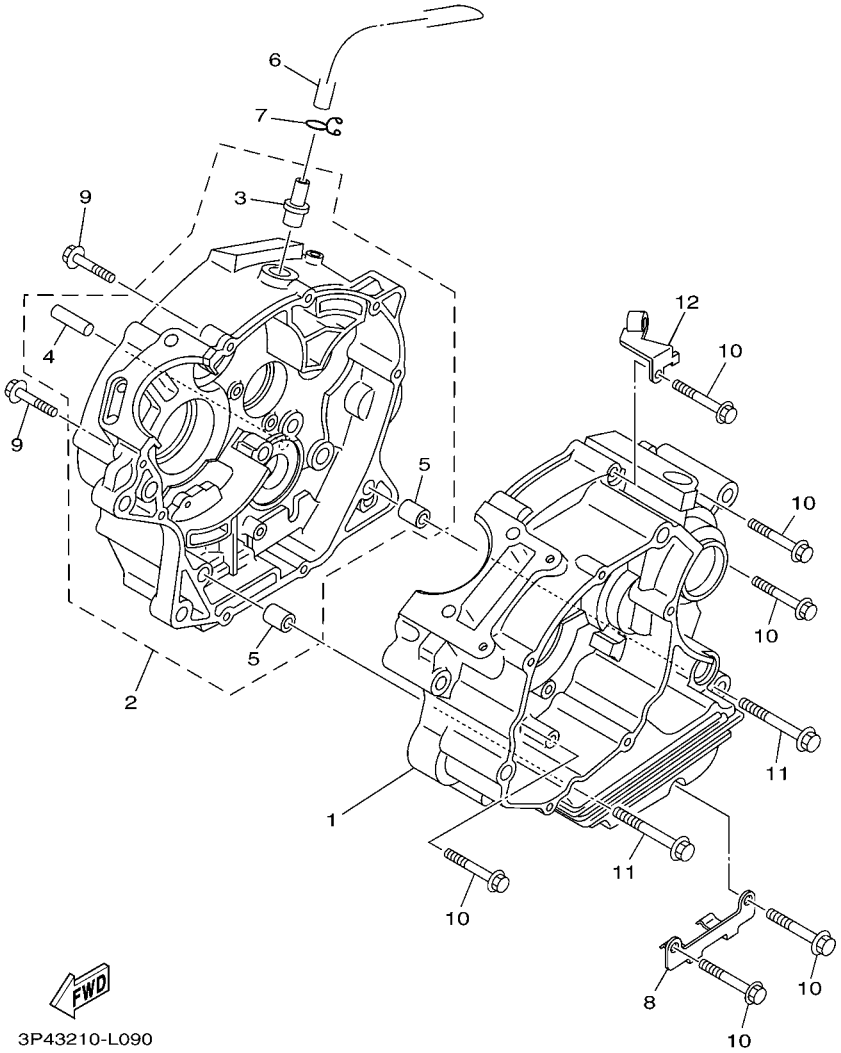

FIG. 9 CARTER — CRANKCASE

REF. Nº	CODIGO Nº PART NO.	DESCRIPCION DESCRIPTION	3P43					OBSERVACIONES REMARKS
1	5YY–E5111–10	CARTER MANIVELA 1 CRANKCASE 1	1					
2	5YY–WE512–31	CARTER 2 CRANKCASE 2	1					
3	4LS–E1167–00	.CUBIERTA RESPIRADERO 2 .PIPE, BREATHER 2	1					
4	93608–30839	.PASADOR DE CLAVIJA .PIN, DOWEL	1					
5	91830–21014	.PASADOR DE CLAVIJA .PIN, DOWEL	2					
6	4LS–E1166–00	TUBO RESPIRADERO 1 PIPE, BREATHER 1	1					
7	90467–13858	PRESILLA CLIP	1					
8	5YY–E5118–10	SOPORTE HOLDER	1					
9	90105–06858	TORNILLO BOLT, FLANGE	2					
10	90105–06856	TORNILLO BOLT, FLANGE	6					
11	90105–06855	TORNILLO BOLT, FLANGE	2					
12	4LS–E5441–00	SOSTEN DE CABLE DE EMBRAGUE HOLDER, CLUTCH CABLE	1					

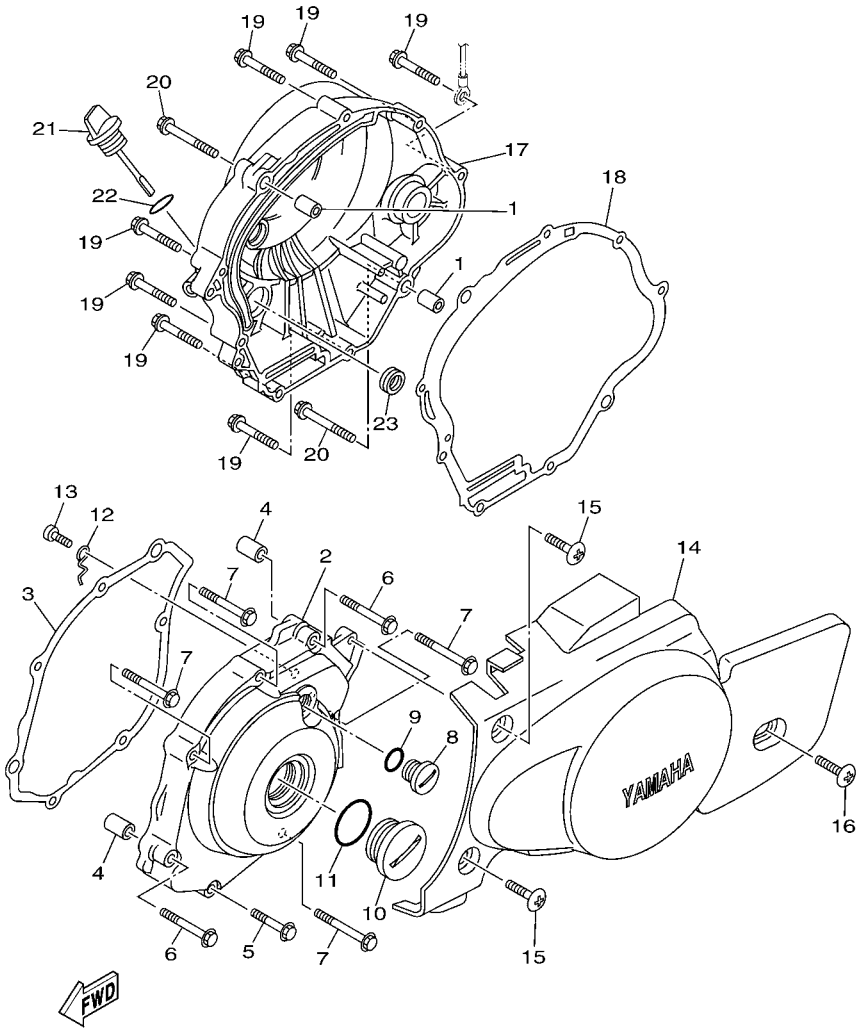

FIG. 10 CUBIERTA DE CARTER 1 CRANKCASE COVER 1

REF. Nº	CODIGO Nº PART NO.	DESCRIPCION DESCRIPTION	3P43					OBSERVACIONES REMARKS
1	91830–21014	PASADOR DE CLAVIJA PIN, DOWEL	2					
2	4LS–E5411–00	CUBIERTA DE CARTER 1 COVER, CRANKCASE 1	1					
3	5YY–E5451–00	EMPAQ DE CUBIERTA DE CARTER GASKET, CRANKCASE COVER 1	1					
4	91830–21014	PASADOR DE CLAVIJA PIN, DOWEL	2					
5	95027–06035	PERNO, DE BRIDA BOLT, FLANGE	1					
6	95027–06045	PERNO, DE BRIDA BOLT, FLANGE	2					
7	95027–06055	PERNO, DE BRIDA BOLT, FLANGE	4					
8	90340–14814	TORNILLO, DE DRENAJE PLUG, STRAIGHT SCREW	1					
9	93210–14899	ANILLO O O-RING	1					
10	90340–32808	TORNILLO, DE DRENAJE PLUG, STRAIGHT SCREW	1					
11	93210–328A4	ANILLO O O-RING	1					
12	4LS–E5191–00	PLACA PLATE	1					
13	98507–06010	TORNILLO DE CABEZA PLANA SCREW, PAN HEAD	1					
14	5US–E5418–00	CUBIERTA CAJA DE CADENA COVER, CHAIN CASE	1					
15	90154–06061	TORNILLO DE LIGAR SCREW, BINDING	2					
16	90150–06021	TORNILLO CABEZA REDONDA SCREW, ROUND HEAD	1					
17	5YY–E5421–10	TAPA DE CARTER DERECHA COVER, CRANKCASE 2	1					
18	5YY–E5461–01	JUNTA TAPA CARTER DERECHO 2 GASKET, CRANKCASE COVER 2	1					
19	95027–06035	PERNO, DE BRIDA BOLT, FLANGE	7					
20	95027–06045	PERNO, DE BRIDA BOLT, FLANGE	2					
21	4LS–E5362–00	TAPON DEL NIVEL DE ACEITE PLUG, OIL LEVEL	1					
22	93210–19809	ANILLO O O-RING	1					
23	93101–10838	SELLO ACEITE OIL SEAL	1					

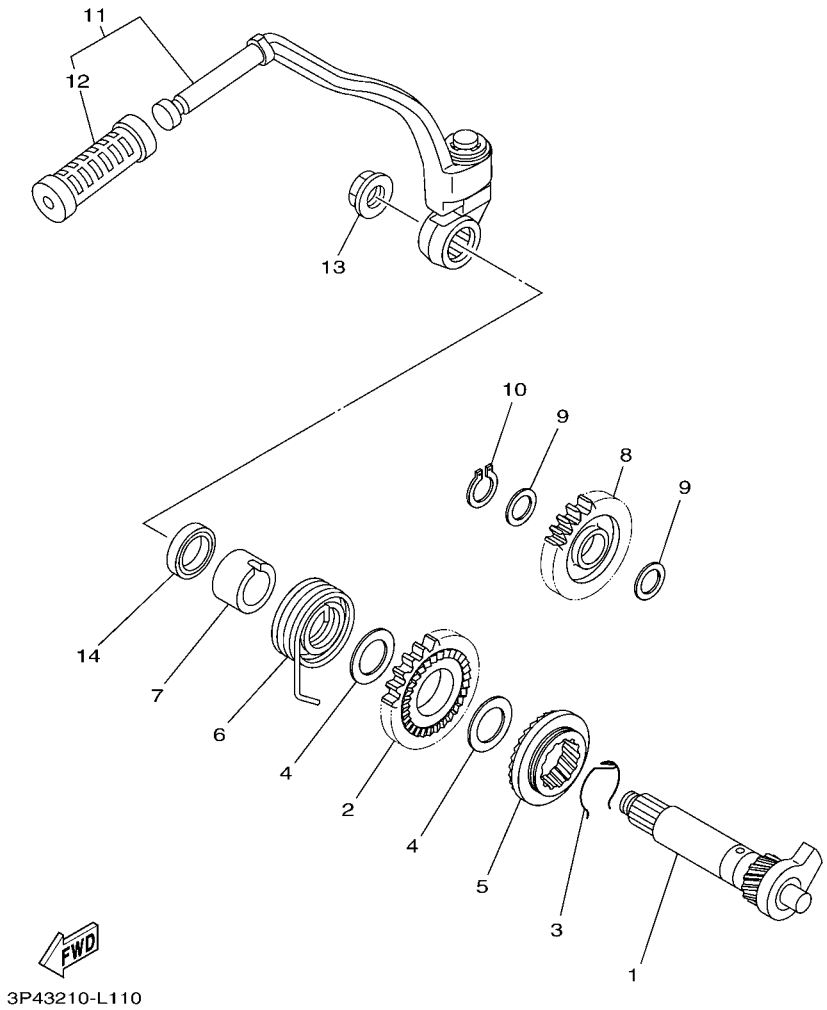

FIG. 11 ARRANQUE STARTER

REF. Nº	CODIGO Nº PART NO.	DESCRIPCION DESCRIPTION	3P43					OBSERVACIONES REMARKS
1	5US–E5661–03	EJE DE PEDAL DE ARRANQUE AXLE, KICK	1					
2	5YY–E5641–00	ENGRANAJE PEDAL ARRANQUE (28T) GEAR, KICK (28T)	1					
3	90468–26048	PRESILLA CLIP	1					
4	90201–202L3	ARANDELA DE PLACA(0.5T) WASHER, PLATE (0.5T)	2					
5	5YY–E5671–00	RUEDA DE TRINQUETE WHEEL, RATCHET	1					
6	90508–26667	RESORTE DE TORSION SPRING, TORSION	1					
7	5YY–E5666–00	SEPARADOR SPACER	1					
8	5RE–E5651–01	PINON LIBRE, PEDAL ARRANQUE GEAR, KICK IDLE	1					
9	90201–177G4	ARANDELA PLANA WASHER, PLATE	2					
10	99009–17400	PRESILLA REDONDA CIRCLIP	1					
11	5YY–E5620–10	PEDAL DE ARRANQUE COMPLETO KICK CRANK ASSY	1					
12	36L–E5618–00	.GOMA PROTECTORA, PEDAL .COVER, KICK LEVER	1					
13	90179–12800	TUERCA NUT	1					
14	93109–20821	SELLO ACEITE OIL SEAL	1					

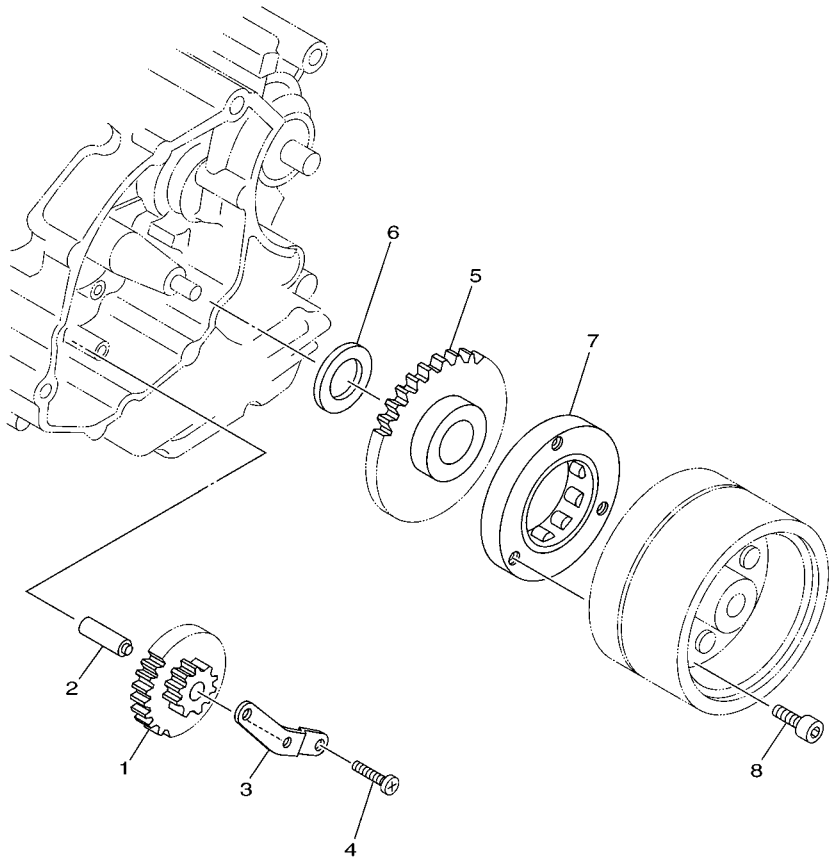

3P01200-C120

FIG. 12 EMBRAGUE DEL ARRANQUE STARTER CLUTCH

REF. Nº	CODIGO Nº PART NO.	DESCRIPCION DESCRIPTION	3P43					OBSERVACIONES REMARKS
1	5VL–E5512–00	ENGRENAJE NEUTRO GEAR, IDLER 1	1					
2	5US–E5521–00	EJE 1 SHAFT 1	1					
3	5US–E5532–00	PLACA DE ENGRENAJE NEUTRO PLATE, IDLE GEAR	1					
4	9850N–06012	TORNILLO DE CABEZA CON PLANA SCREW, PAN HEAD	2					
5	5AP–15517–02	ENGRENAJE POSICION 2DA GEAR, IDLER 2	1					
6	90201–25290	ARANDELA PLANA WASHER, PLATE	1					
7	5US–E5590–00	ENSAMBLE GUIA CADENA ARRANQUE STARTER ONE-WAY ASSY	1					
8	90110–08802	TORNILLO ALLEN BOLT, HEXAGON SOCKET HEAD	3					

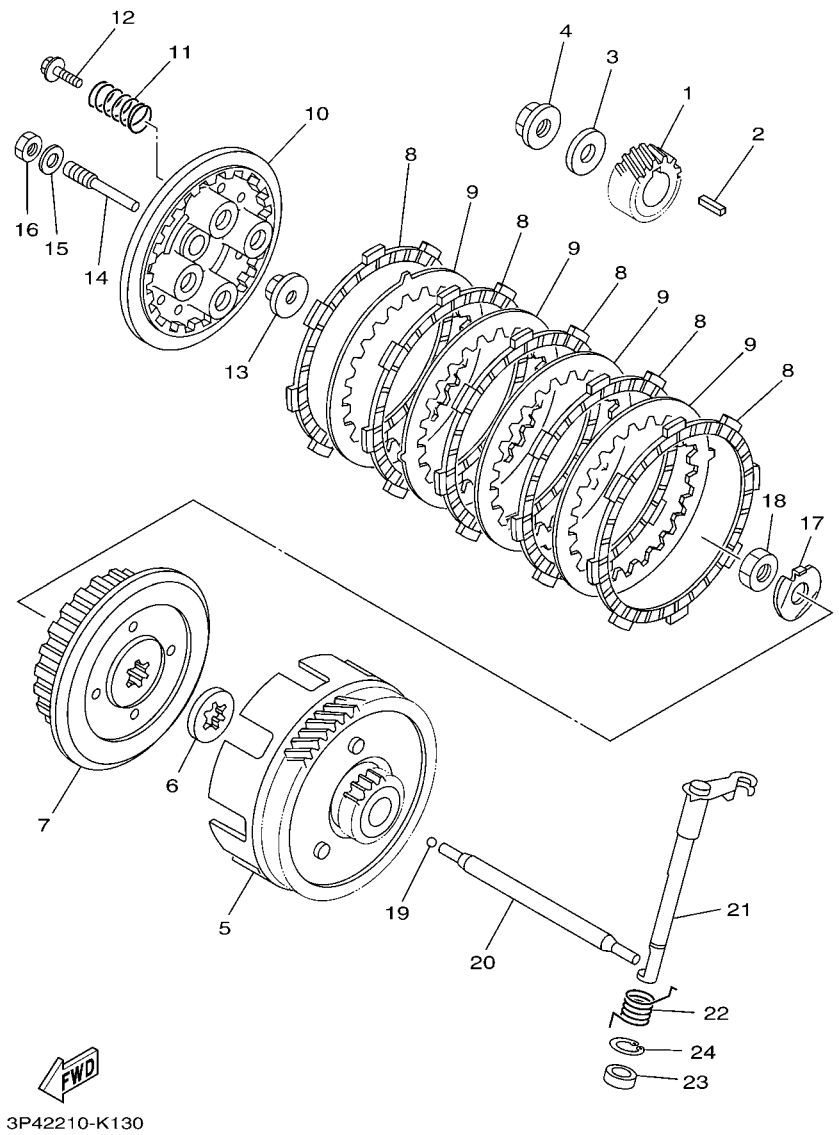

FIG. 13 EMBRAGUE CLUTCH

REF. Nº	CODIGO Nº PART NO.	DESCRIPCION DESCRIPTION	3P43					OBSERVACIONES REMARKS
1	5YY–E6111–00	ENGRANAJE TRACC.PRIMARIA GEAR, PRIMARY DRIVE	1					
2	90282–05001	CHAVETA, RECTA (5MMX16MM) KEY, STRAIGHT (5MMX16MM)	1					
3	90201–122H1	ARANDELA PLANA WASHER, PLATE	1					
4	90179–12659	TUERCA NUT	1					
5	5RE–E6150–20	CAMPANA DE EMBRAGUE PRIMARY DRIVEN GEAR COMP.	1					
6	4LS–E6154–00	ARANDELA, DE EMPUJE 1 PLATE, THRUST 1	1					
7	4LS–E6371–00	CUBO, DE EMBRAGUE BOSS, CLUTCH	1					
8	5KA–E6321–10	PLACA DE FRICCION PLATE, FRICTION	5					
9	5RE–E6324–10	PLACA DE EMBRAGUE PLATE, CLUTCH 1	4					
10	5RE–E6351–00	PLATO DE PRESION PLATE, PRESSURE 1	1					
11	90501–216A6	RESORTE DE COMPRESION SPRING, COMPRESSION	4					
12	90119–05801	TORNILLO CON ARANDELA BOLT, WITH WASHER	4					
13	4LS–E6358–00	PLACA DE EMPUJE PLATE, PUSH	1					
14	4LS–E6356–00	VARILLA DE EMPUJE 1 ROD, PUSH 1	1					
15	9290N–06200	ARANDELA WASHER	1					
16	9530N–06600	TUERCA NUT,HEX	1					
17	90215–12815	ARANDELA DE CIERRE WASHER, LOCK	1					
18	90170–12060	TUERCA NUT	1					
19	93503–16807	ESFERA BALL	1					
20	4LS–E6357–01	VARILLA DE EMPUJE 2 ROD, PUSH 2	1					
21	4LS–E6381–01	CONJ. PALANCA DE EMPUJE PUSH LEVER COMP.	1					
22	90508–14857	RESORTE DE TORSION SPRING, TORSION	1					
23	93102–12877	SELLO ACEITE OIL SEAL	1					
24	99009–20500	PRESILLA REDONDA CIRCLIP	1					

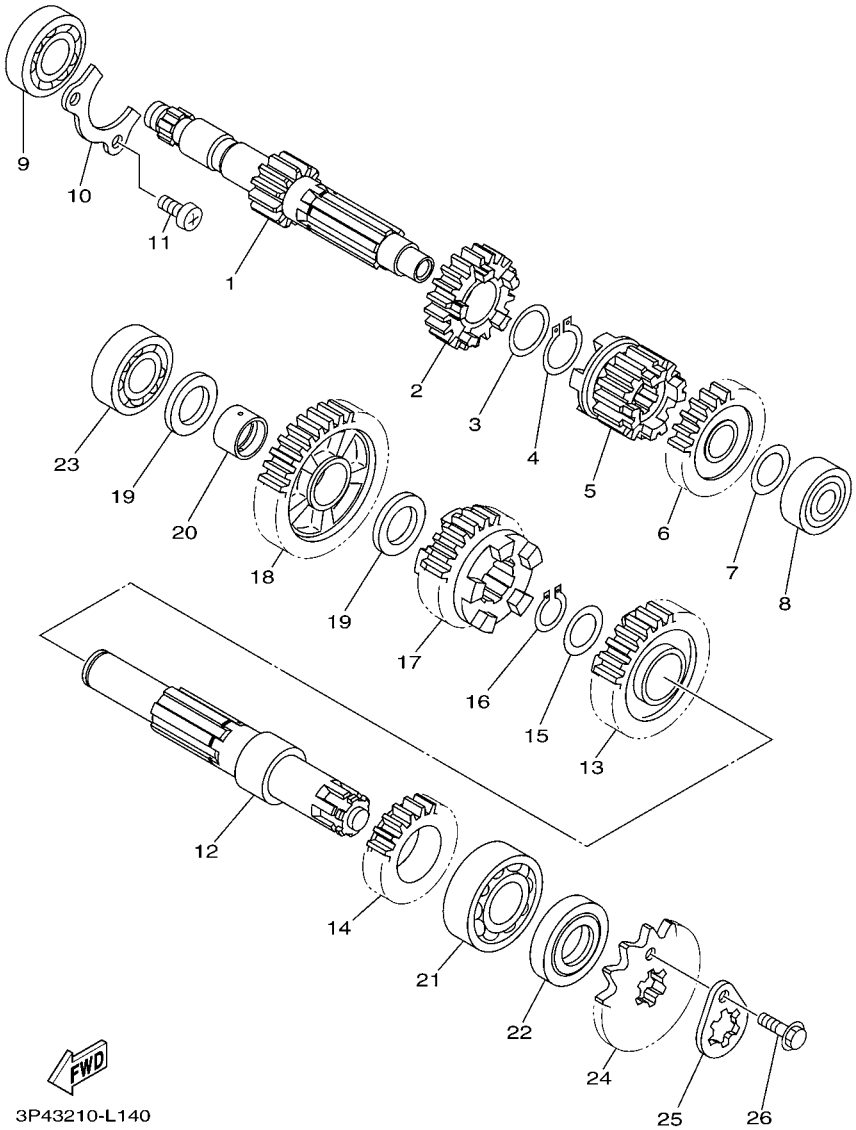

FIG. 14 TRANSMISION — TRANSMISSION

REF. Nº	CODIGO Nº PART NO.	DESCRIPCION DESCRIPTION	3P43					OBSERVACIONES REMARKS
1	5RE–E7411–10	EJE PRIMARIO (12T) AXLE, MAIN (12T)	1					
2	5RE–E7131–10	ENGRANAJE PINON DE 3RA (20T) GEAR, 3RD PINION (20T)	1					
3	90209–17285	ARANDELA DE SEPARACION WASHER	1					
4	93410–20809	SEGURO CIRCLIP	1					
5	5RE–E7121–10	ENGRANAJE DE PINON DE 2DA(16T) GEAR, 2ND PINION (16T)	1					
6	5RE–E7141–10	ENGRANAJE PINON DE 4TA (23T) GEAR, 4TH PINION (23T)	1					
7	90201–127E1	ARANDELA PLANA WASHER, PLATE	1					
8	93306–201Y4	COJINETE BEARING	1					
9	93306–203X2	COJINETE BEARING	1					
10	4LS–E7471–00	PLACA, DE CUBIERTA PLATE, COVER	1					
11	98502–06014	TORNILLO SCREW, PAN HEAD	2					
12	5RE–E7402–10	EJE DE TRACCION COMPLETO DRIVE AXLE ASSY	1					
13	5RE–E7241–10	ENGRANAJE DE RUEDA 4TA (21T) GEAR, 4TH WHEEL (21T)	1					
14	5RE–E7221–10	ENGRANAJE RUEDA DE 2DA (27T) GEAR, 2ND WHEEL (27T)	1					
15	90209–18208	ARANDELA DE SEPARACION WASHER	1					
16	93410–22039	SEGURO CIRCLIP	1					
17	5RE–E7231–10	ENGRANAJE RUEDA DE 3RA (24T) GEAR, 3RD WHEEL (24T)	1					
18	5RE–E7211–10	ENGRANAJE RUEDA DE 1 RA (33T) GEAR, 1ST WHEEL (33T)	1					
19	90201–177G4	ARANDELA PLANA WASHER, PLATE	2					
20	5RE–E7258–00	COLLAR 1 COLLAR 1	1					
21	93306–204Y6	COJINETE BEARING	1					
22	93102–20876	SELLO ACEITE OIL SEAL	1					
23	93306–203X9	COJINETE BEARING	1					
24	93822–15808	CORONA (15T) SPROCKET, DRIVE (15T)	1					
25	4LS–E7456–00	SOPORTE DE CORONA HOLDER, SPROCKET	1					
26	95027–06010	PERNO, DE BRIDA BOLT, FLANGE	1					

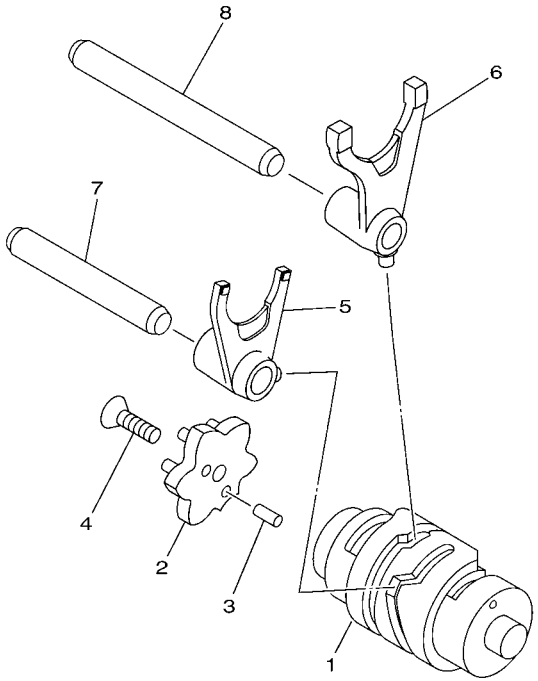

15D2200-F140

FIG. 15 LEVA DE CAMBIO & HORQUILLA SHIFT CAM & FORK

REF. Nº	CODIGO Nº PART NO.	DESCRIPCION DESCRIPTION	3P43					OBSERVACIONES REMARKS
1	5KA–E8540–20	LEVA DEL CAMBIO COMPLETA SHIFT CAM ASSY	1					
2	4LS–E8185–00	SEGMENTO DE RETENCION SEGMENT	1					
3	93604–10011	PASADOR DE CLAVIJA PIN, DOWEL	2					
4	90149–06126	TORNILLO DE REGLAJE SCREW	1					
5	5KA–E8511–20	HORQUILLA DEL CAMBIO 1 FORK, SHIFT 1	1					
6	5KA–E8512–20	HORQUILLA DEL CAMBIO 2 FORK, SHIFT 2	1					
7	36L–E8531–00	BARRA GUIA HORQ. CAMBIO 1 BAR, SHIFT FORK GUIDE 1	1					
8	36L–E8535–00	BARRA GUIA HORQ .CAMBIO 2 BAR, SHIFT FORK GUIDE 2	1					

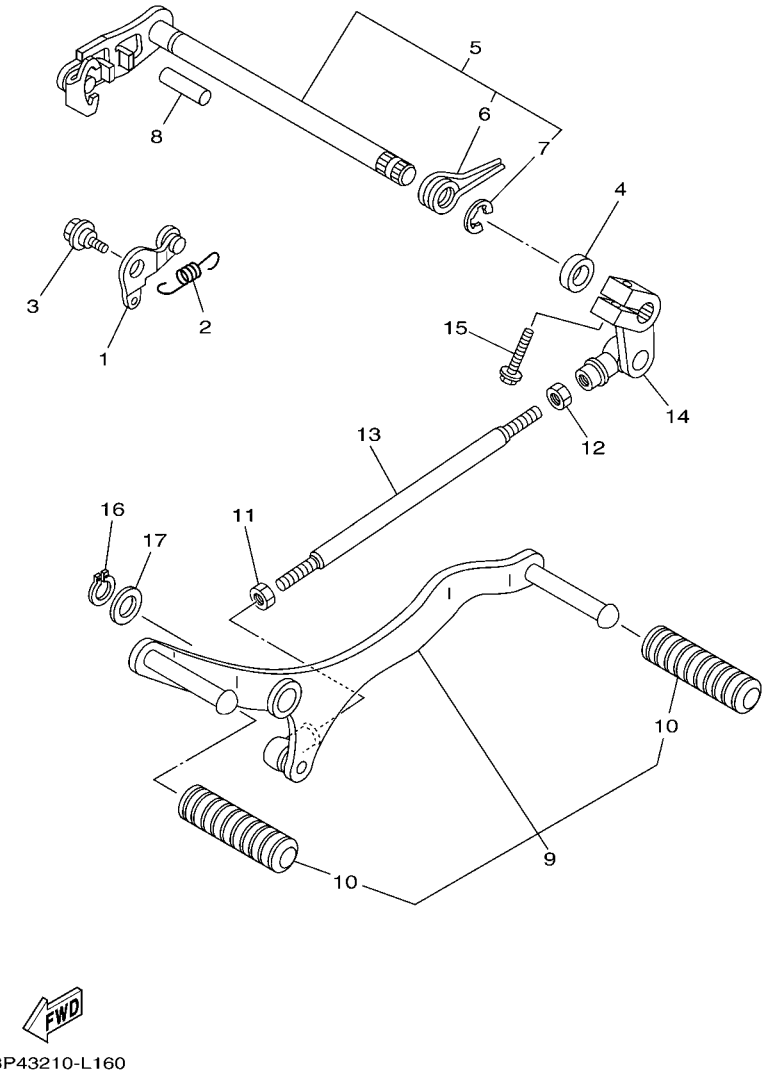

FIG. 16 EJE DE CAMBIO & PEDAL SHIFT SHAFT

REF. Nº	CODIGO Nº PART NO.	DESCRIPCION DESCRIPTION	3P43					OBSERVACIONES REMARKS
1	4LS–E8140–01	PALANCA DE TOPE COMPLETA STOPPER LEVER ASSY	1					
2	4LS–E8337–00	RESORTE SPRING	1					
3	90109–06239	PERNO BOLT	1					
4	93102–12875	SELLO ACEITE OIL SEAL	1					
5	4LS–XE812–00	EJE SELECTOR COMPLETO SHIFT SHAFT ASSY	1					
6	90508–32837	.RESORTE DE TORSION .SPRING, TORSION	1					
7	99001–10600	.PRESILLA REDONDA .CIRCLIP	1					
8	93608–30839	PASADOR DE CLAVIJA PIN, DOWEL	1					
9	5US–E8110–00	PEDAL DE CAMBIO COMPLETO SHIFT PEDAL ASSY	1					
10	5US–E8113–00	.FUNDA DEL PEDAL DEL CAMBIO .COVER, SHIFT PEDAL	2					
11	90170–06228	TUERCA NUT(COUNTER CLOCKWISE)	1					
12	9530L–06700	TUERCA NUT, HEX.,	1					
13	5US–E8115–00	VARILLA DEL CAMBIO ROD, SHIFT	1					
14	5US–E8112–00	BRAZO DEL CAMBIO ARM, SHIFT	1					
15	9702N–06020	PERNO BOLT	1					
16	99009–15400	PRESILLA REDONDA CIRCLIP	1					
17	90201–152L1	ARANDELA PLANA WASHER, PLATE	1					

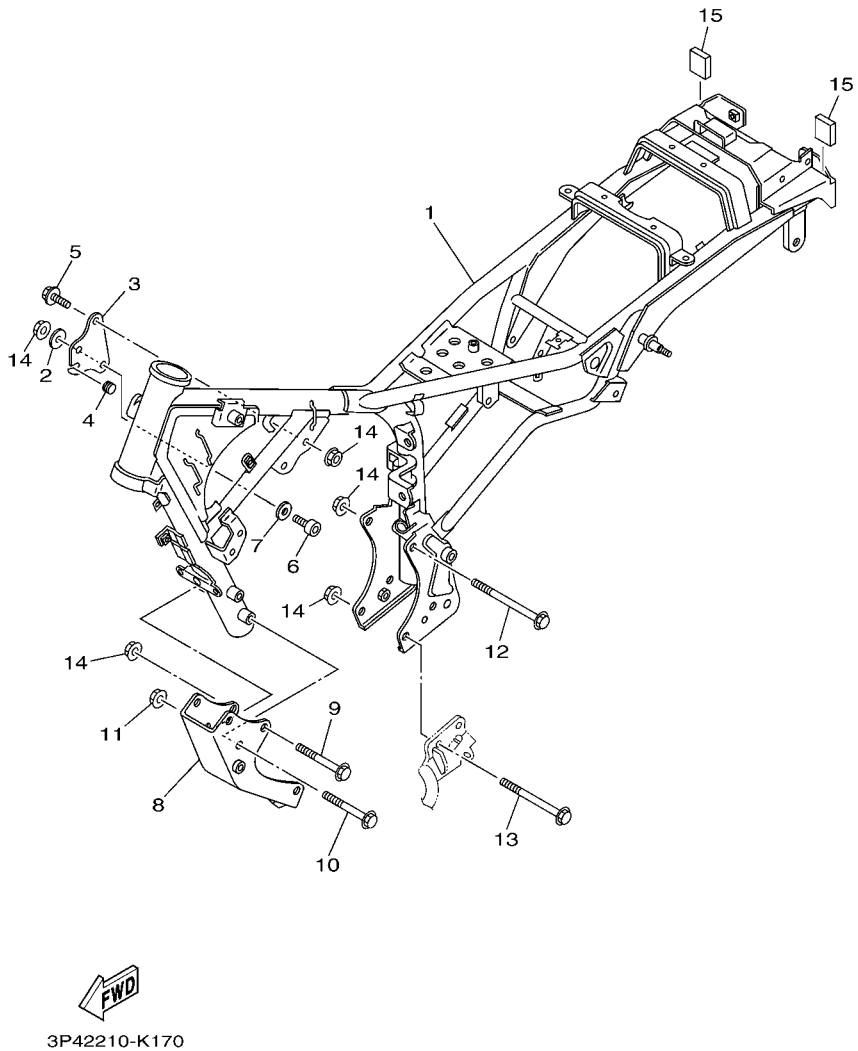

FIG. 17 CUADRO FRAME

REF. Nº	CODIGO Nº PART NO.	DESCRIPCION DESCRIPTION	3P43					OBSERVACIONES REMARKS
1	16C–F1110–00	ARMAZON COMPLETO FRAME COMP.	1					
2	90201–08808	ARANDELA PLANA WASHER, PLATE	1					
3	5US–F1315–00	SOPORTE DE MOTOR 2 STAY, ENGINE 2	1					
4	5US–F139X–00	AMORTIGUADOR DAMPER	1					
5	90105–08809	TORNILLO BOLT, FLANGE	2					
6	9131N–08040	PERNO BOLT	1					
7	92907–08600	ARANDELA WASHER, PLATE	1					
8	5US–F1316–00	SOPORTE DE MOTOR 3 STAY, ENGINE 3	1					
9	90105–088A6	TORNILLO BOLT, FLANGE	2					
10	95817–10080	TORNILLO BOLT, FLANGE	2					
11	95707–10500	TUERCA DE BRIDA NUT, FLANGE	2					
12	90105–08006	TORNILLO BOLT, FLANGE	1					
13	95817–08120	TORNILLO BOLT, FLANGE	1					
14	95707–08500	TUERCA DE BRIDA NUT, FLANGE	7					
15	5US–F1399–00	TAPA CAP	2					

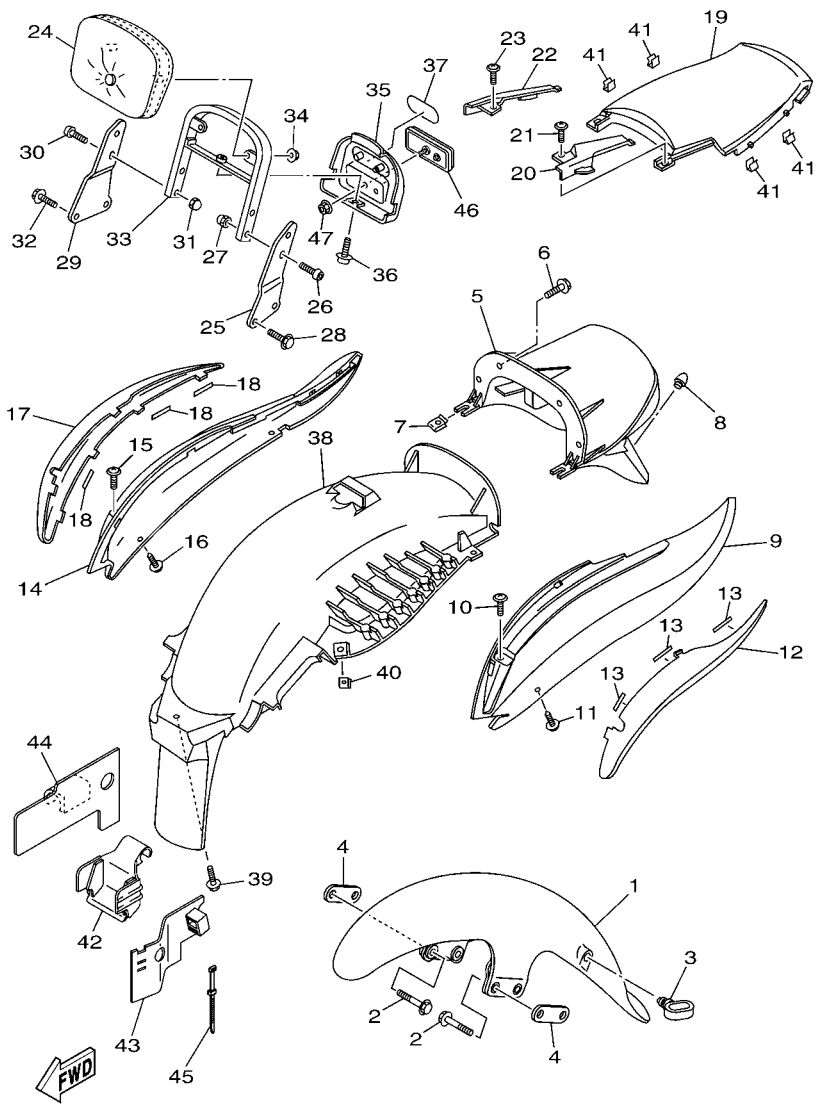

FIG. 18 GUARDABARRO FENDER

REF. Nº	CODIGO Nº PART NO.	DESCRIPCION DESCRIPTION	3P43					OBSERVACIONES REMARKS
1	5US–F1510–20–P0	GUARDABARRO DELANTERO COMPLETO FRONT FENDER COMP.	1					UR PARA LYNM9 UR FOR LYNM9
	5US–F1510–30–P0	GUARDABARRO DELANTERO COMPLETO FRONT FENDER COMP.	1					UR PARA VRC7 UR FOR VRC7
	5US–F1510–00–H9	GUARDABARRO DELANTERO COMPLETO FRONT FENDER COMP.	1					UR PARA BG UR FOR BG
2	95827–06025	TORNILLO BOLT, FLANGE	4					
3	5DG–F1518–00	SOPORTE DE CABLE HOLDER, CABLE	1					
4	5US–F1581–10	SOPORTE PLACA ACCESORIA 1 STAY, PLATE FITTING 1	2					
5	5US–F1611–00	GUARDABARRO TRASERO FENDER, REAR	1					
6	90119–06108	TORNILLO CON ARANDELA BOLT, WITH WASHER	4					
7	90183–05818	TUERCA DE RESORTE NUT, SPRING	2					
8	5US–F1639–00	AMORTIGUADOR 2 DAMPER 2	1					
9	5US–F163A–20–P0	CUBIERTA TRAS GUARDABARRO 1 COVER, REAR FENDER 1	1					UR PARA LYNM9 UR FOR LYNM9
	5US–F163A–30–P0	CUBIERTA TRAS GUARDABARRO 1 COVER, REAR FENDER 1	1					UR PARA VRC7 UR FOR VRC7
	5US–F163A–00–H9	CUBIERTA TRAS GUARDABARRO 1 COVER, REAR FENDER 1	1					UR PARA BG UR FOR BG
10	90159–06178	TORNILLO CON VALONA SCREW, WITH WASHER	1					
11	90160–05806	TORNILLO REDONDO ROSCA HEMBRA SCREW, ROUND TAPPING	2					
12	5US–F171L–00	MUELLE , CUBIERTA LATERAL 1 MOLE, SIDE COVER 1	1					
13	5US–F173T–00	CINTA 1 TAPE 1	3					
14	5US–F163E–20–P0	CUBIERTA TRAS GUARDABARRO 2 COVER, REAR FENDER 2	1					UR PARA LYNM9 UR FOR LYNM9
	5US–F163E–30–P0	CUBIERTA TRAS GUARDABARRO 2 COVER, REAR FENDER 2	1					UR PARA VRC7 UR FOR VRC7
	5US–F163E–00–H9	CUBIERTA TRAS GUARDABARRO 2 COVER, REAR FENDER 2	1					UR PARA BG UR FOR BG
15	90159–06178	TORNILLO CON VALONA SCREW, WITH WASHER	1					
16	90160–05806	TORNILLO REDONDO ROSCA HEMBRA SCREW, ROUND TAPPING	2					
17	5US–F171M–00	MUELLE, CUBIERTA LATERAL 2 MOLE, SIDE COVER 2	1					
18	5US–F173T–00	CINTA 1 TAPE 1	3					
19	5US–F163F–00–P0	CUBIERTA TRAS GUARDABARRO 3 COVER, REAR FENDER 3	1					UR PARA LYNM9 UR FOR LYNM9
	5US–F163F–00–P1	CUBIERTA TRAS GUARDABARRO 3 COVER, REAR FENDER 3	1					UR PARA VRC7 UR FOR VRC7
	5US–F163F–00–H9	CUBIERTA TRAS GUARDABARRO 3 COVER, REAR FENDER 3	1					UR PARA BG UR FOR BG

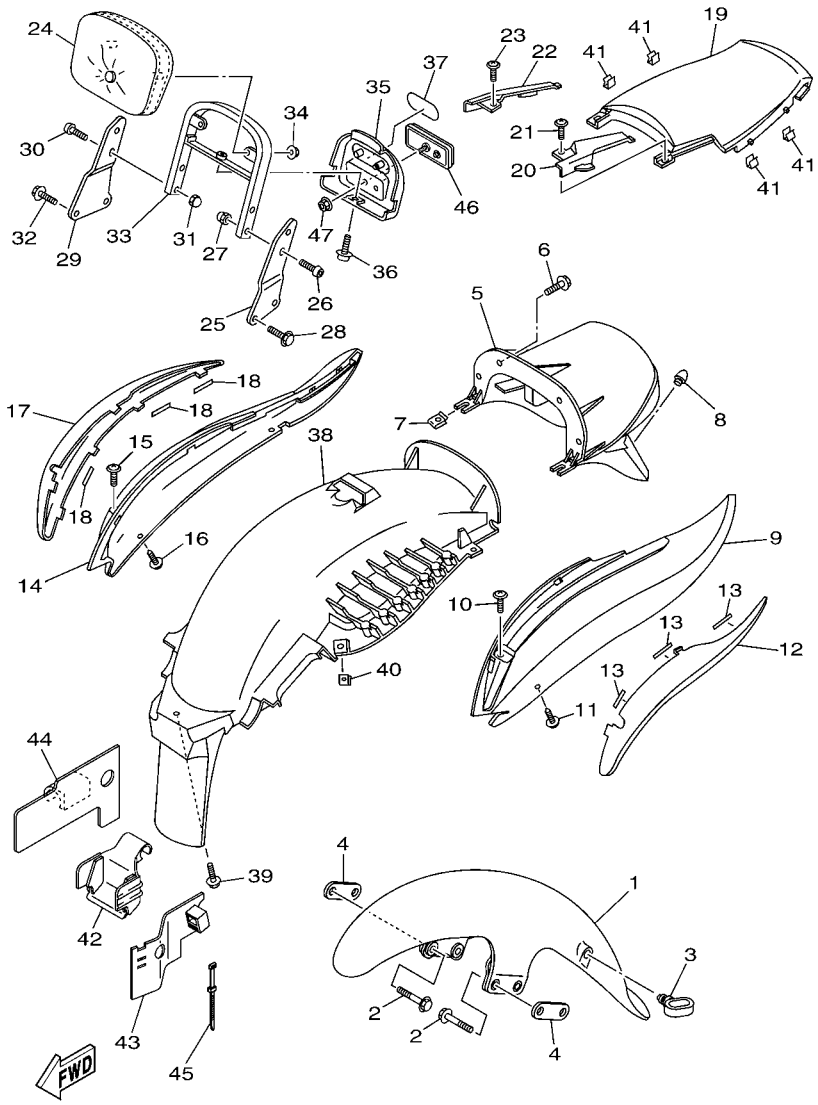

FIG. 18 GUARDABARRO FENDER

REF. Nº	CODIGO Nº PART NO.	DESCRIPCION DESCRIPTION	3P43					OBSERVACIONES REMARKS
20	5US–F172A–20–P0	PANEL 1 PANEL 1	1					UR PARA LYNM9 UR FOR LYNM9
	5US–F172A–30–P0	PANEL 1 PANEL 1	1					UR PARA VRC7 UR FOR VRC7
	5US–F172A–00–H9	PANEL 1 PANEL 1	1					UR PARA BG UR FOR BG
21	90159–06178	TORNILLO CON VALONA SCREW, WITH WASHER	1					
22	5US–F172F–20–P0	PANEL 2 PANEL 2	1					UR PARA LYNM9 UR FOR LYNM9
	5US–F172F–30–P0	PANEL 2 PANEL 2	1					UR PARA VRC7 UR FOR VRC7
	5US–F172F–00–H9	PANEL 2 PANEL 2	1					UR PARA BG UR FOR BG
23	90159–06178	TORNILLO CON VALONA SCREW, WITH WASHER	1					
24	5US–F840F–00	COJIN DEL RESPALDO BACK REST ASSY	1					
25	5US–F164F–00	APOYO 1 STAY 1	1					
26	90111–08816	TORNILLO BOLT,HEX. SOCKET BUTTON	2					
27	90176–08804	TUERCA CORONA NUT, CROWN	2					
28	95817–08020	TORNILLO BOLT, FLANGE	2					
29	5US–F164G–00	APOYO 2 STAY 2	1					
30	90111–08816	TORNILLO BOLT,HEX. SOCKET BUTTON	2					
31	90176–08804	TUERCA CORONA NUT, CROWN	2					
32	95817–08020	TORNILLO BOLT, FLANGE	2					
33	5US–F164H–00	APOYO 3 STAY 3	1					
34	95707–06500	TUERCA DE BRIDA NUT, FLANGE	2					
35	5US–F842M–00	CUBIERTA 1 COVER 1	1					
36	97607–06216	TORNILLO CAB CON PLANA C/ARAN SCREW,WITH WASHER	1					
37	5US–F157B–00	EMBLEMA EMBLEM	1					
38	5US–F1629–00	GUARDABARRO INFERIOR GUARD, MUD	1					
39	90119–06108	TORNILLO CON ARANDELA BOLT, WITH WASHER	1					
40	90183–05818	TUERCA DE RESORTE NUT, SPRING	2					
41	5US–F8457–00	PRESILLA CLIP	4					
42	5US–F1665–00	GUIA DE GUARDAFANGO GUIDE, MUD GUARD	1					

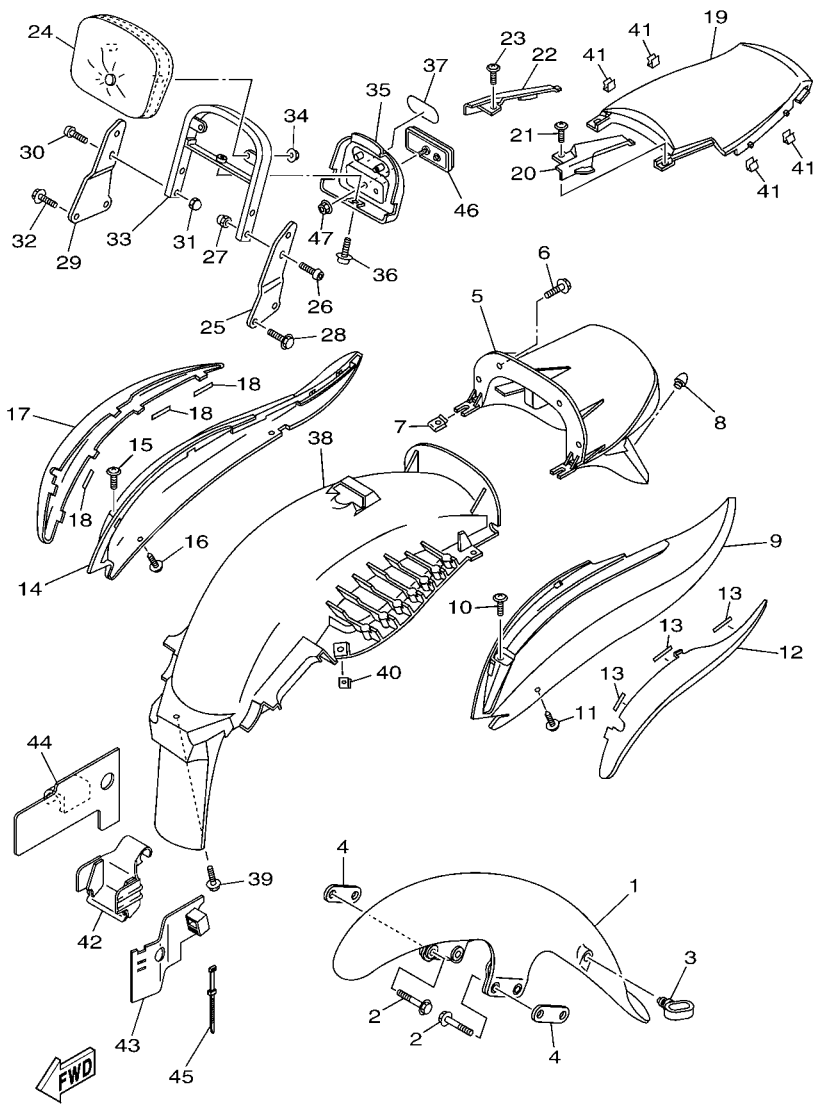

FIG. 18 GUARDABARRO FENDER

REF. Nº	CODIGO Nº PART NO.	DESCRIPCION DESCRIPTION	3P43					OBSERVACIONES REMARKS
43	5US–F1621–00	CHARNELA FLAP	1					
44	5US–F1621–10	CHARNELA FLAP	1					
45	36L–H3936–00	BANDA DE CABLE DE INTERRUPTOR BAND, SWITCH CORD	1					
46	5US–H5110–00	REFLECTOR COMPLETO REFLECTOR ASSY	1					
47	95707–05500	TUERCA DE BRIDA NUT, FLANGE	1					

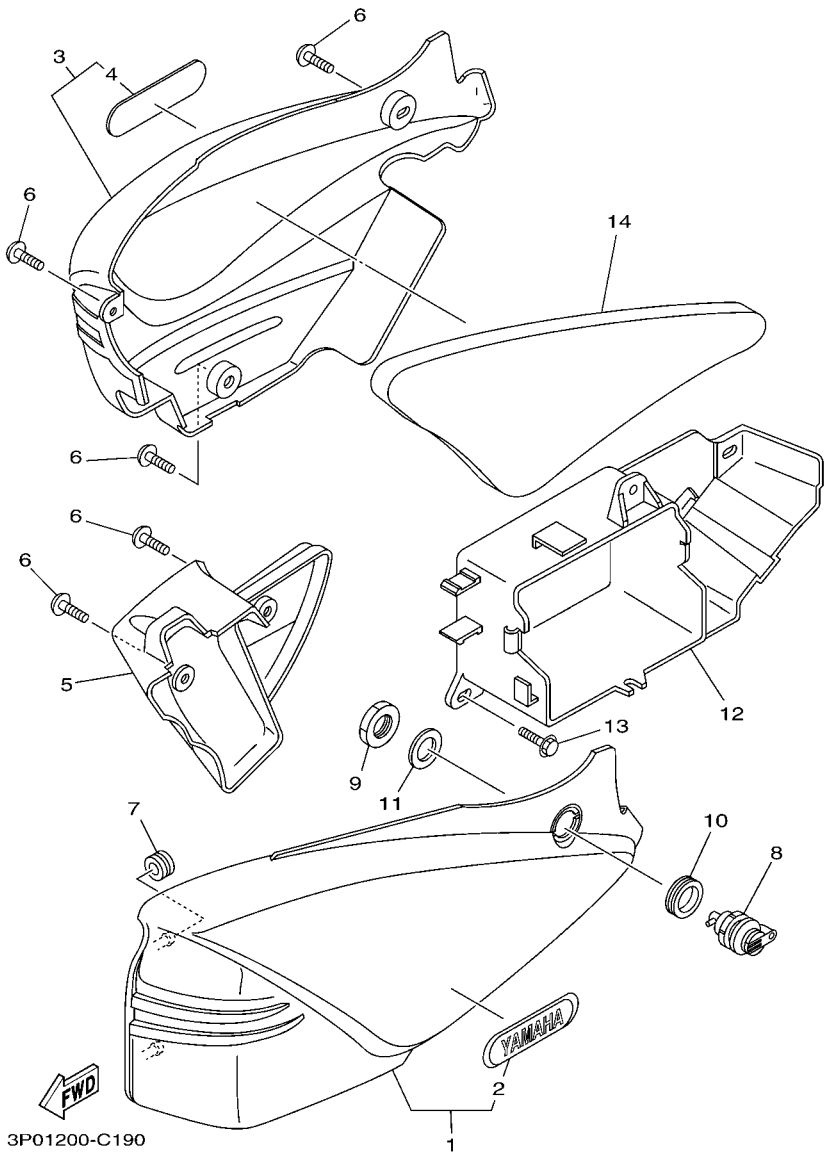

FIG. 19 CUBIERTA LATERAL SIDE COVER

REF. Nº	CODIGO Nº PART NO.	DESCRIPCION DESCRIPTION	3P43					OBSERVACIONES REMARKS
1	5US–F1710–20–0X	CUBIERTA LATERAL COMPLETA 1 SIDE COVER ASSY 1	1					UR PARA LYNM9 UR FOR LYNM9
	5US–F1710–40–1X	CUBIERTA LATERAL COMPLETA 1 SIDE COVER ASSY 1	1					UR PARA VRC7 UR FOR VRC7
	5US–F1710–50–0X	CUBIERTA LATERAL COMPLETA 1 SIDE COVER ASSY 1	1					UR PARA BG UR FOR BG
2	5US–F173B–00	.EMBLEMA 3D .EMBLEM 3D	1					UR PARA LYNM9 UR FOR LYNM9
	5US–F173B–10	.EMBLEMA 3D .EMBLEM 3D	1					UR PARA VRC7,BG UR FOR VRC7,BG
3	5US–F1720–20–0X	CUBIERTA LATERAL COMPLETA 2 SIDE COVER ASSY 2	1					UR PARA LYNM9 UR FOR LYNM9
	5US–F1720–40–1X	CUBIERTA LATERAL COMPLETA 2 SIDE COVER ASSY 2	1					UR PARA VRC7 UR FOR VRC7
	5US–F1720–50–0X	CUBIERTA LATERAL COMPLETA 2 SIDE COVER ASSY 2	1					UR PARA BG UR FOR BG
4	5US–F174B–00	.EMBLEMA 3D .EMBLEM 3D	1					UR PARA LYNM9 UR FOR LYNM9
	5US–F174B–10	.EMBLEMA 3D .EMBLEM 3D	1					UR PARA VRC7,BG UR FOR VRC7,BG
5	5US–F1731–00	TAPA LATERAL 3 COVER, SIDE 3	1					
6	90150–06021	TORNILLO CABEZA REDONDA SCREW, ROUND HEAD	6					
7	90480–13861	TAPON GROMMET	2					
8	2YA–F1780–00	CERRADURA COMPLETA LOCK ASSY	1					
9	90179–22800	TUERCA NUT	1					
10	90480–24186	TAPON GROMMET	1					
11	90201–225A4	ARANDELA PLANA (T=1.0) WASHER, PLATE (T=1.0)	1					
12	5US–F177G–00	CAJA DE BATERIA BOX, BATTERY	1					
13	90119–06839	TORNILLO CON ARANDELA BOLT, WITH WASHER	3					
14	5US–F1717–00	AMORTIGUADOR DAMPER	1					

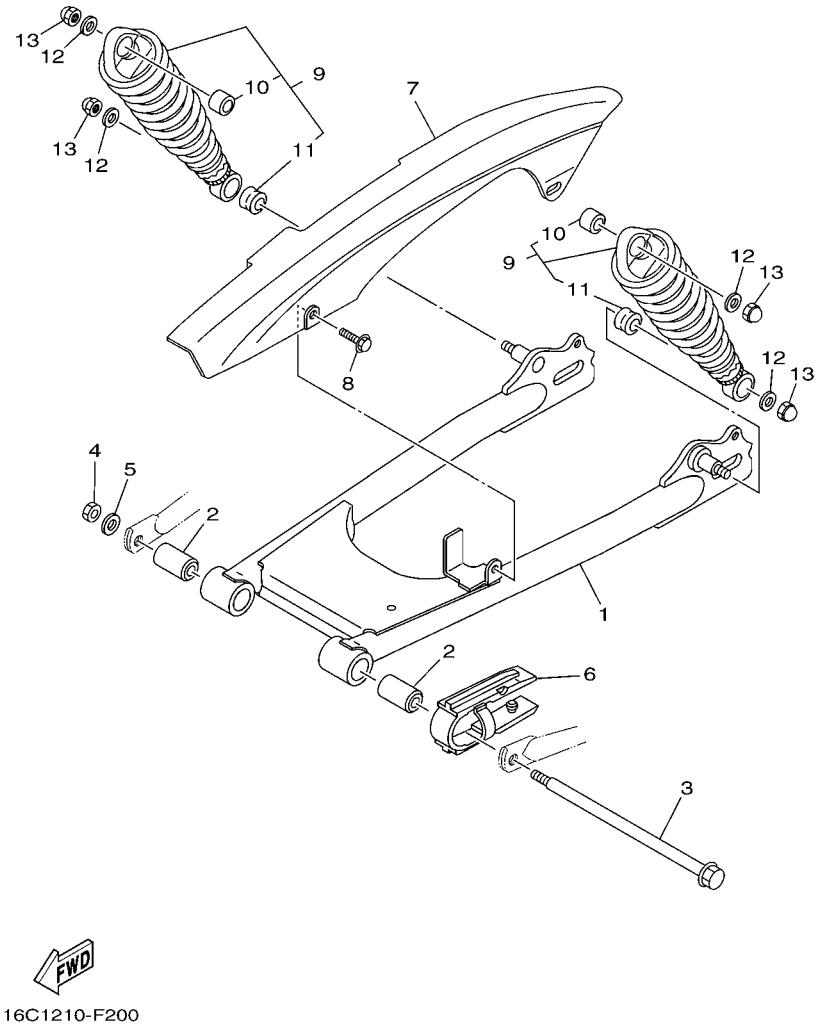

FIG. 20 BRAZO TRASERO & SUSPENSION REAR ARM & SUSPENSION

REF. Nº	CODIGO Nº PART NO.	DESCRIPCION DESCRIPTION	3P43					OBSERVACIONES REMARKS
1	5US–WF211–01	BRAZO TRASERO COMPLETO REAR ARM COMP.	1					
2	36L–F2123–00	.BUJE 1 .BUSH 1	2					
3	5US–F2141–00	EJE DEL BARCULANTE SHAFT, PIVOT	1					
4	90170–12065	TUERCA NUT	1					
5	92907–12200	ARANDELA WASHER	1					
6	5US–F2151–00	SELLO DE GUARDA SEAL, GUARD	1					
7	5US–F2311–00	CABRECADENA CASE, CHAIN	1					
8	90119–06809	TORNILLO CON ARANDELA BOLT, WITH WASHER	2					
9	5US–F2210–02	AMORTIGUADOR TRASERO COMPLETO SHOCK ABSORBER ASSY, REAR	2					
10	5US–F2216–00	.BUJE DEL AMORTIGUADOR TRASERO .BUSH, REAR SHOCK ABSORBER	1					
11	5US–F2226–00	.BUJE DE AMORTIGUADOR INFERIOR .BUSH, SHOCK ABSORBER LOWER	1					
12	90201–106F2	ARANDELA PLANA WASHER, PLATE	4					
13	90176–10073	TUERCA CORONA NUT, CROWN	4					

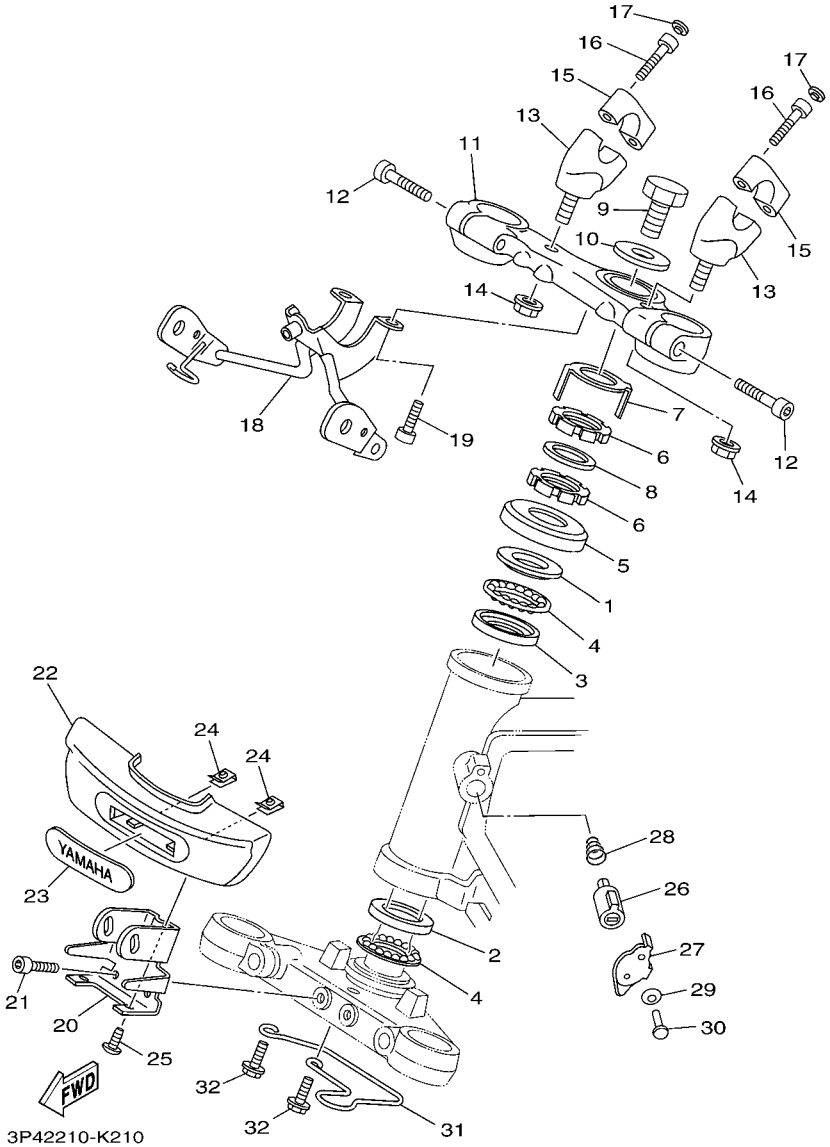

FIG. 21 DIRECCION STEERING

REF. Nº	CODIGO Nº PART NO.	DESCRIPCION DESCRIPTION	3P43					OBSERVACIONES REMARKS
1	5UC–F3414–00	BASE DE BOLA 4 RACE, BALL 4	1					
2	36L–F3412–00	PISTA DE BOLAS 2 RACE, BALL 2	1					
3	5UC–F3413–00	BASE DE BOLA 3 RACE, BALL 3	1					
4	4LS–F341E–10	RETEN DE COJINETE RETAINER, BALL BEARING	2					
5	5US–F3416–00	CUBIERTA DE BASE DE BOLA 2 COVER, BALL RACE 2	1					
6	90179–25033	TUERCA NUT	2					
7	4LS–F3418–00	ARANDELA ESPECIAL WASHER, SPECIAL	1					
8	90202–26142	ARANDELA DE PLANA WASHER, PLATE	1					
9	90101–14800	TORNILLO BOLT	1					
10	90209–15800	ARANDELA DE SEPARACION WASHER	1					
11	5US–F3435–00	PLATINA SUPERIOR CROWN, HANDLE	1					
12	90110–08801	TORNILLO ALLEN BOLT, HEXAGON SOCKET HEAD	2					
13	5US–F3442–00	SOPORTE DE MANUBRIO INFERIOR HOLDER, HANDLE LOWER	2					
14	90185–10804	TUERCA AUTOBLOCANTE NUT, SELF-LOCKING	2					
15	5US–F3441–00	SOPORTE DE MANUBRIO HOLDER, HANDLE UPPER	2					
16	90110–08800	TORNILLO ALLEN BOLT, HEXAGON SOCKET HEAD	4					
17	90338–08163	TAPON PLUG	4					
18	5US–F317E–00	SOPORTE 1 STAY 1	1					
19	91317–06016	PERNO BOLT	2					
20	5US–F3174–00	SOPORTE DEL FARO DELANTERO STAY, HEADLIGHT	1					
21	91317–06016	PERNO BOLT	2					
22	5US–F3391–00	PANEL DELANTERO PANEL, FRONT	1					
23	5US–F1781–00	EMBLEMA 1 EMBLEM, 1	1					
24	90183–05818	TUERCA DE RESORTE NUT, SPRING	2					
25	90160–05807	TORNILLO REDONDO ROSCA HEMBRA SCREW, ROUND TAPPING	2					
26	36L–F3480–00	CERRADURA DE DIRECCION COMPL. STEERING LOCK ASSY	1					
27	5US–F3484–00	TAPA DE CERRADURA DE MANUBRIO CAP, HANDLE LOCK	1					

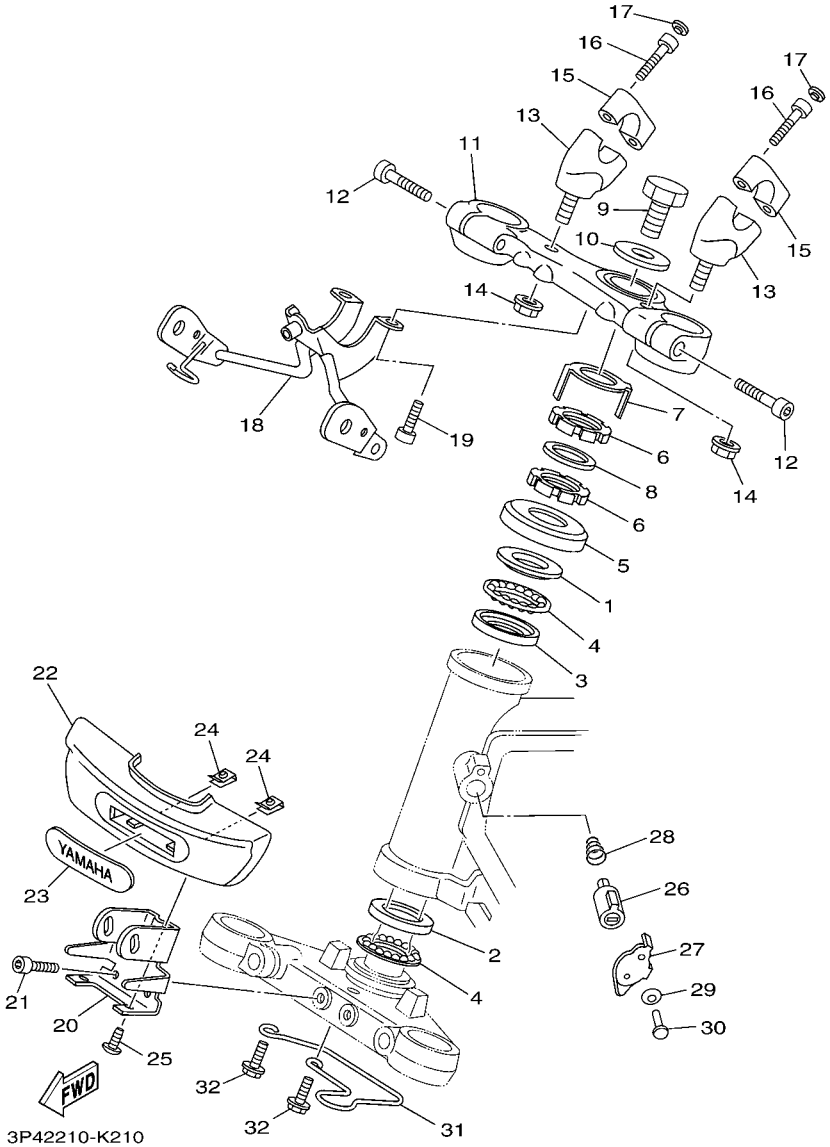

FIG. 21 DIRECCION STEERING

REF. Nº	CODIGO Nº PART NO.	DESCRIPCION DESCRIPTION	3P43					OBSERVACIONES REMARKS
28	90502–09024	RESORTE CONICO SPRING, CONICAL	1					
29	90208–04029	ARANDELA DE RESORTE CONICO WASHER, CONICAL SPRING	1					
30	90269–04003	REMACHE RIVET	1					
31	5US–F3466–00	GRAMPA CLAMP	1					
32	95807–06012	TORNILLO BOLT, FLANGE	2					

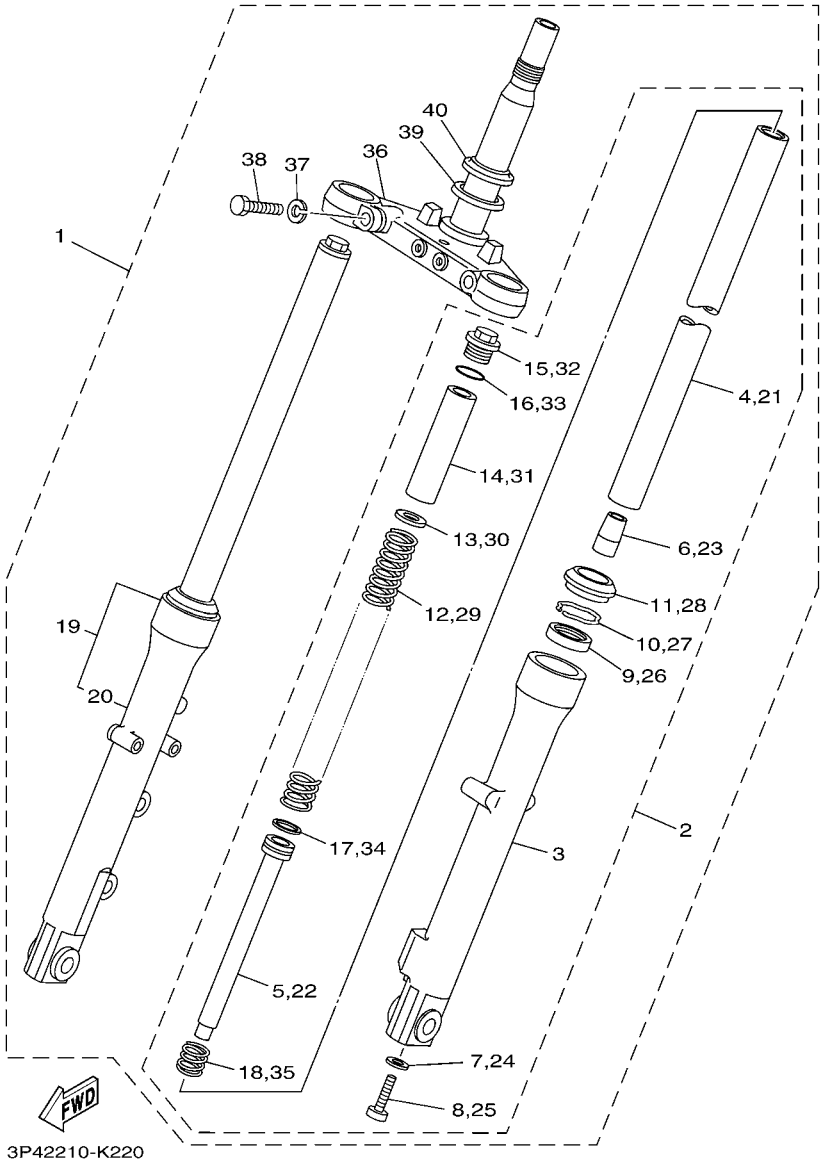

FIG. 22 HORQUILLA DELANTERA FRONT FORK

REF. Nº	CODIGO Nº PART NO.	DESCRIPCION DESCRIPTION	3P43					OBSERVACIONES REMARKS
1	5US–F3100–02	HORQUILLA DELANTERA COMPLETA FRONT FORK ASSY	1					
2	5US–F3102–00	.HORQUILLA DELANTERA COMPL.(MI) .FRONT FORK ASSY (L.H)	1					
3	5US–F3126–00	..TUBO EXTERIOR (IZQUIERDO) ..TUBE, OUTER (LEFT)	1					
4	5US–F3110–00	..TUBO INTERIOR COMPLETO 1 ..INNER TUBE COMP.1	1					
5	5US–F3170–00	..CILINDRO COMPL DE HORQ DELANT ..CYLINDER COMP., FRONT FORK	1					
6	5US–F3173–00	..VASTAGO AHUSADO ..SPINDLE, TAPER	1					
7	36L–F3158–00	..EMPAQUE ..GASKET	1					
8	36L–F3181–00	..TORNILLO CABEZAHEXAGONAL ..BOLT, HEXAGON SOCKET HEAD	1					
9	5YY–F3145–10	..RETEN DE ACEITE ..OIL SEAL	1					
10	4LS–F3153–00	..ANILLO DE ENGANCHE ..RING, SNAP	1					
11	5YY–F3144–10	..GUARDAPOLVO ..SEAL, DUST	1					
12	5US–F3141–00	..RESORTE HORQUILLA DELANT. ..SPRING, FRONT FORK	1					
13	4LS–F3142–00	..ASIENTO DEL MUELLE SUPERIOR ..SEAT, SPRING UPPER	1					
14	5US–F3118–00	..SEPARADOR ..SPACER	1					
15	5US–F3194–00	..TORNILLO DE BANDA DE FUNDA ..SCREW, BOOT BAND	1					
16	5KA–F3147–00	..ARO ..O-RING	1					
17	36L–F3157–00	..ANILLO DEL PISTON ..RING, PISTON	1					
18	36L–F3152–00	..RESORTE DE SUBENSAMBLE ..SPRING, SUB	1					
19	5US–F3103–00	.HORQUILLA DELANTERA COMPL.(MD) .FRONT FORK ASSY (R.H)	1					
20	5US–F3136–00	..TUBO EXTERIOR (DERECHO) ..TUBE, OUTER (RIGHT)	1					
21	5US–F3110–00	..TUBO INTERIOR COMPLETO 1 ..INNER TUBE COMP.1	1					
22	5US–F3170–00	..CILINDRO COMPL DE HORQ DELANT ..CYLINDER COMP., FRONT FORK	1					
23	5US–F3173–00	..VASTAGO AHUSADO ..SPINDLE, TAPER	1					
24	36L–F3158–00	..EMPAQUE ..GASKET	1					
25	36L–F3181–00	..TORNILLO CABEZAHEXAGONAL ..BOLT, HEXAGON SOCKET HEAD	1					
26	5YY–F3145–10	..RETEN DE ACEITE ..OIL SEAL	1					
27	4LS–F3153–00	..ANILLO DE ENGANCHE ..RING, SNAP	1					

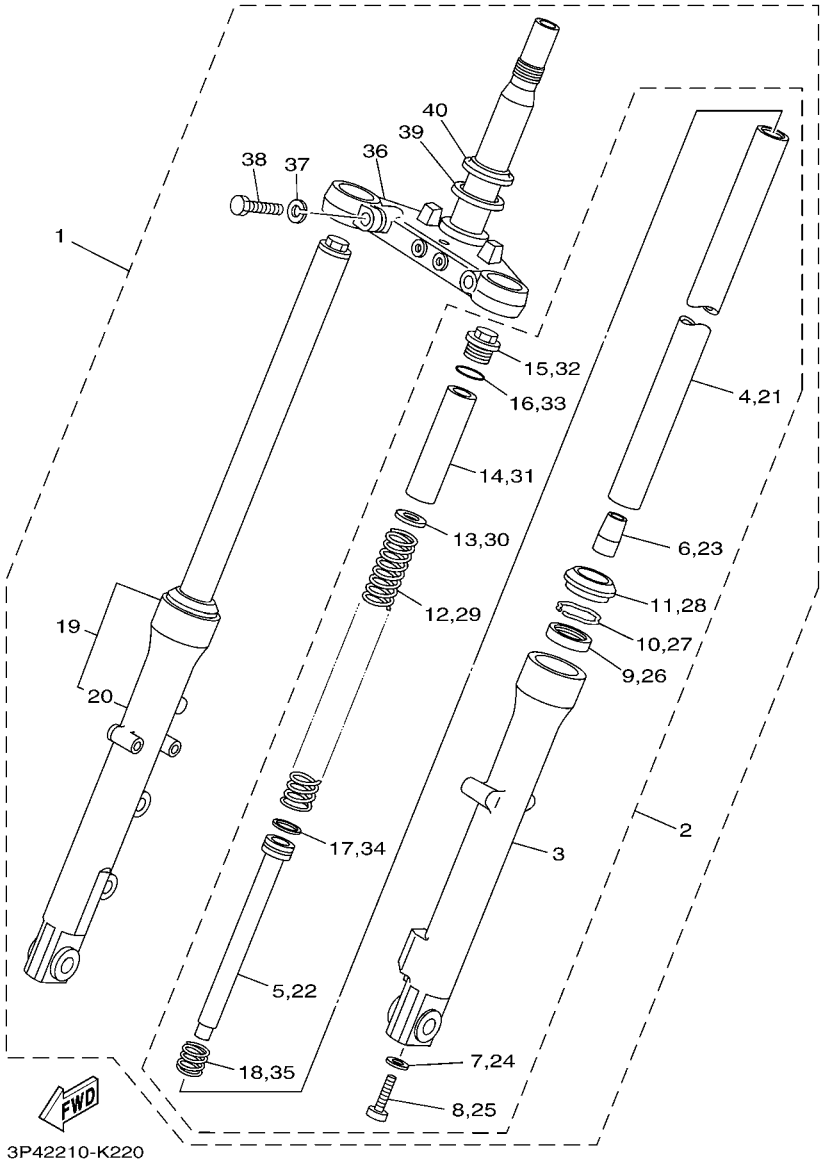

FIG. 22 HORQUILLA DELANTERA FRONT FORK

REF. Nº	CODIGO Nº PART NO.	DESCRIPCION DESCRIPTION	3P43					OBSERVACIONES REMARKS
28	5YY–F3144–10	..GUARDAPOLVO ..SEAL, DUST	1					
29	5US–F3141–00	..RESORTE HORQUILLA DELANT. ..SPRING, FRONT FORK	1					
30	4LS–F3142–00	..ASIENTO DEL MUELLE SUPERIOR ..SEAT, SPRING UPPER	1					
31	5US–F3118–00	..SEPARADOR ..SPACER	1					
32	5US–F3194–00	..TORNILLO DE BANDA DE FUNDA ..SCREW, BOOT BAND	1					
33	5KA–F3147–00	..ARO ..O-RING	1					
34	36L–F3157–00	..ANILLO DEL PISTON ..RING, PISTON	1					
35	36L–F3152–00	..RESORTE DE SUBENSAMBLE ..SPRING, SUB	1					
36	5US–F331X–00	.MENSULA INFERIOR .BRACKET, UNDER	1					
37	36L–F3159–00	.ARANDELA DE RESORTE INFERIOR .WASHER, SPRING, LOWER	2					
38	36L–F3346–00	.PERNO 1 .BOLT 1	2					
39	5YY–F3144–10	.GUARDAPOLVO .SEAL, DUST	1					
40	36L–F3411–00	.PISTA DE BOLAS 1 .RACE, BALL 1	1					

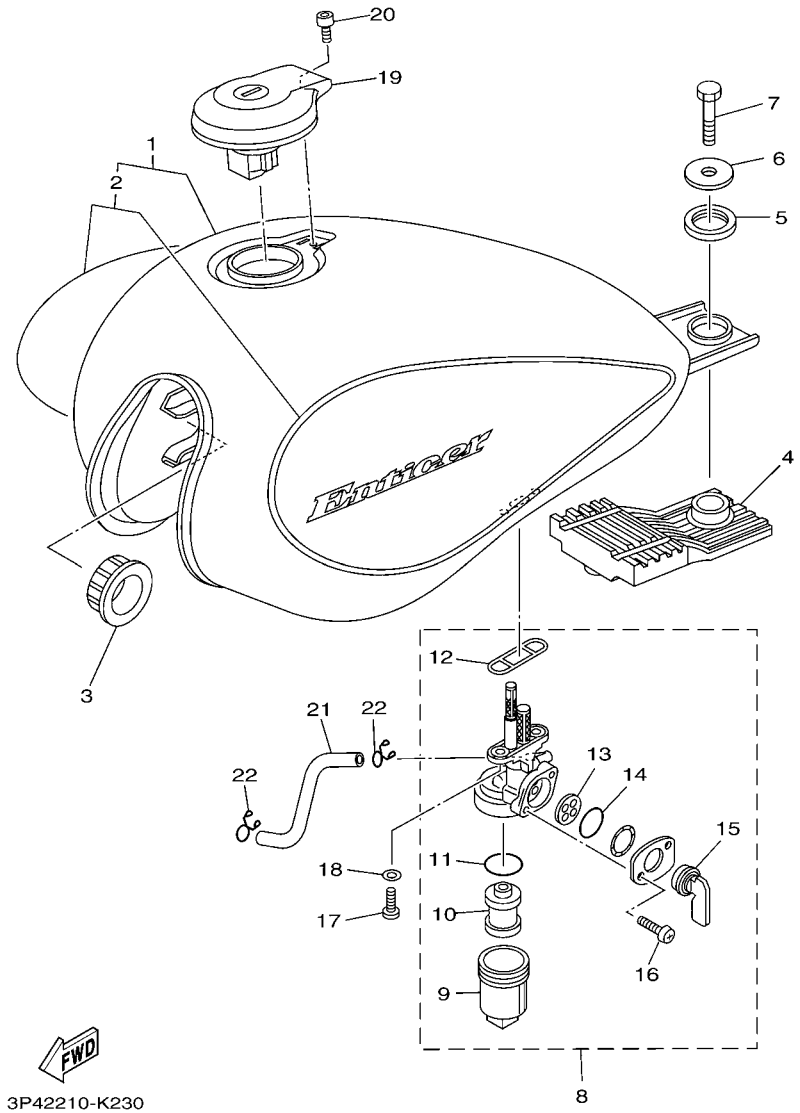

FIG. 23 DEPOSITO DE COMBUSTIBLE FUEL TANK

REF. Nº	CODIGO Nº PART NO.	DESCRIPCION DESCRIPTION	3P43					OBSERVACIONES REMARKS
1	3P4–XF410–50–P0	TANQUE COMBUSTIBLE COMPL. FUEL TANK ASSY	1					UR PARA LYNM9 UR FOR LYNM9
	3P4–XF410–60–P0	TANQUE COMBUSTIBLE COMPL. FUEL TANK ASSY	1					UR PARA VRC7 UR FOR VRC7
	3P4–XF410–30–H9	TANQUE COMBUSTIBLE COMPL. FUEL TANK ASSY	1					UR PARA BG UR FOR BG
2	5US–F4240–50	.JUEGO DE CALCOMANIAS .GRAPHIC SET	1					UR PARA LYNM9 UR FOR LYNM9
	5US–F4240–60	.JUEGO DE CALCOMANIAS .GRAPHIC SET	1					UR PARA VRC7 UR FOR VRC7
	5US–F4240–30	.JUEGO DE CALCOMANIAS .GRAPHIC SET	1					UR PARA BG UR FOR BG
3	5US–F4181–00	AMORTIGUADOR DE MONTAJE 1 DAMPER, LOCATING 1	2					
4	5US–F4182–00	AMORTIGUADOR DE MONTAJE 2 DAMPER, LOCATING 2	1					
5	5US–F4183–00	AMORTIGUADOR DE MONTAJE 3 DAMPER, LOCATING 3	1					
6	90201–08569	ARANDELA PLANA WASHER, PLATE	1					
7	97007–08016	PERNO BOLT	1					
8	5US–F4500–00	GRIFO DE COMBUSTIBLE 1 FUEL COCK ASSY 1	1					
9	4UU–F4521–00	.COPA DE FILTRO .CUP, FILTER	1					
10	4UU–F4515–00	.RED DE FILTRO 2 .NET, FILTER 2	1					
11	4UU–F4565–00	.EMPAQUE .GASKET	1					
12	4UU–F4512–00	.EMPAQUE .GASKET	1					
13	4UU–F4523–00	.VALVULA .VALVE	1					
14	4US–F4534–00	.SELLO DE GRIFO .SEAL, COCK	1					
15	5US–F4524–00	.LLAVE DEL GRIFO .LEVER, COCK	1					
16	98507–03008	.TORNILLO DE CABEZA PLANA .SCREW, PAN HEAD	2					
17	90157–06804	TORNILLO CABEZA CONICA PLANA SCREW, PAN HEAD	2					
18	90202–05807	ARANDELA DE PLANA WASHER, PLATE	2					
19	5US–WF461–00	TAPA DE DEPOSITO COMPLETO CAP ASSY WITH LOCK	1					
20	91317–05010	PERNO BOLT	1					
21	5US–F4311–00	TUBO DE COMBUSTIBLE 1 PIPE, FUEL 1	1					
22	90467–09006	PRESILLA CLIP	2					

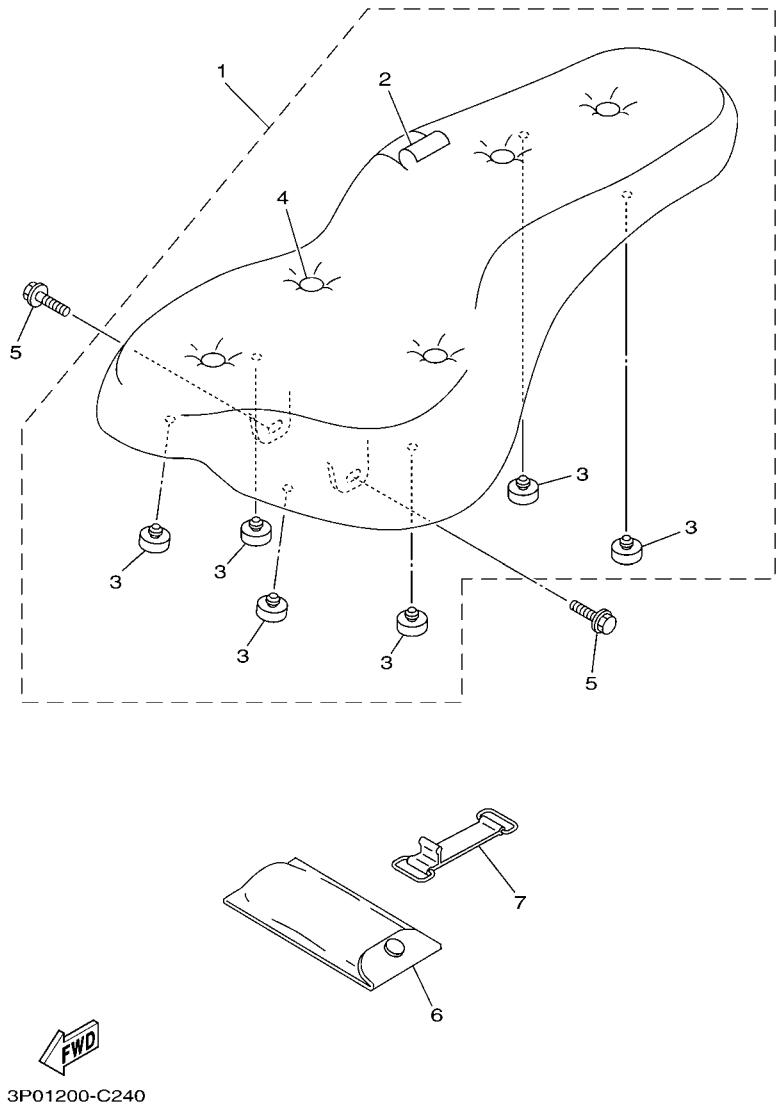

FIG. 24 ASIENTO SEAT

REF. Nº	CODIGO Nº PART NO.	DESCRIPCION DESCRIPTION	3P43					OBSERVACIONES REMARKS
1	5US–F4730–00	SILLIN DOBLE COMPLETO DOUBLE SEAT ASSY	1					
2	5US–F470F–00	.FUNDADE SILLIN .SEAT COVER COMP.	1					
3	4LS–F4741–00	.COJIN DE ASIENTO .PAD, SEAT	6					
4	5US–F471F–00	.BUTTON .BUTTON	5					
5	90119–06060	TORNILLO CON ARANDELA BOLT, WITH WASHER	2					
6	5US–F8100–00	JUEGO DE HERRAMIENTAS TOOL KIT	1					
7	5US–H2131–00	TIRANTE DE BATERIA BAND, BATTERY	1					

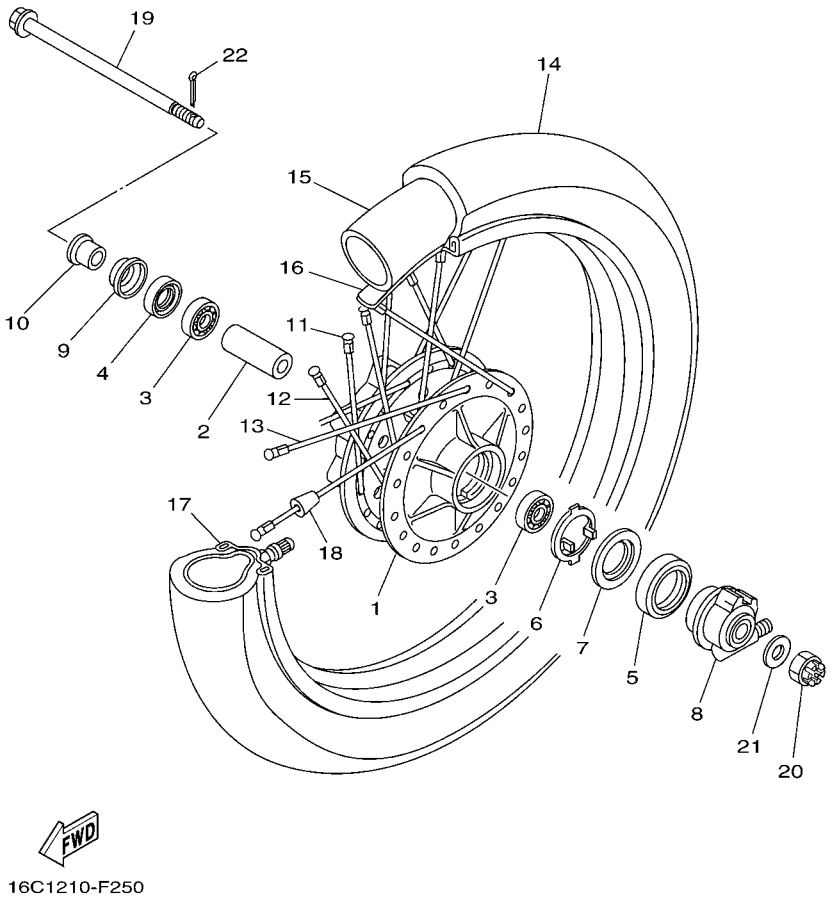

FIG. 25 RUEDA DELANTERA FRONT WHEEL

REF. Nº	CODIGO Nº PART NO.	DESCRIPCION DESCRIPTION	3P43					OBSERVACIONES REMARKS
1	5US–F5111–10	MASA DELANTERA HUB, FRONT	1					
2	5US–F5117–10	ESPACIADOR DE COJINETE SPACER, BEARING	1					
3	93306–252YH	COJINETE BEARING	1					
4	93106–22820	SELLO ACEITE OIL SEAL	1					
5	93105–45801	SELLO ACEITE OIL SEAL	1					
6	4UU–F5149–00	EMBRAGUE DEL CUENTAKMS CLUTCH, METER	1					
7	4UU–F5846–00	RETEN DEL EMBRAGUE RETAINER, CLUTCH	1					
8	5US–F5190–00	UNIDAD DE ENGRANAJE COMPLETA GEAR UNIT ASSY	1					
9	5US–F5118–00	CUBIERTA DE MASA PARA POLVO COVER, HUB DUST	1					
10	90387–1500N	ESPACIADOR COLLAR	1					
11	5US–F5395–00	NIPLE NIPPLE, SPOKE	36					
12	5US–F5196–00	RAYOS INTERNO 1 SPOKE, INNER 1	18					
13	5US–F5197–00	RAYOS EXTERNO 1 SPOKE, OUTER 1	18					
14	94127–18825	NEUMATICO (2.75-18) TIRE (2.75-18)	1					DUNLOP DUNLOP
15	94227–18803	TUBO (2.75-18) TUBE (2.75-18)	1					FALCON FALCON
16	94325–18822	BANDA DE ARO (2.50-18) BAND, RIM (2.50-18)	1					
17	5US–F5144–00	ARO (1.60-18) RIM (1.60-18)	1					
18	3HT–25398–00	CONTRAPESO DE RUEDA (15G) BALANCER, WHEEL (15G)	1					
19	5US–F5181–00	EJE DE LA RUEDA AXLE, WHEEL	1					
20	90171–14800	TUERCA ENTALLADA NUT, CASTLE	1					
21	92907–14200	ARANDELA WASHER	1					
22	90252–55800	PASADOR DE CHAVETA PIN, COTTER	1					

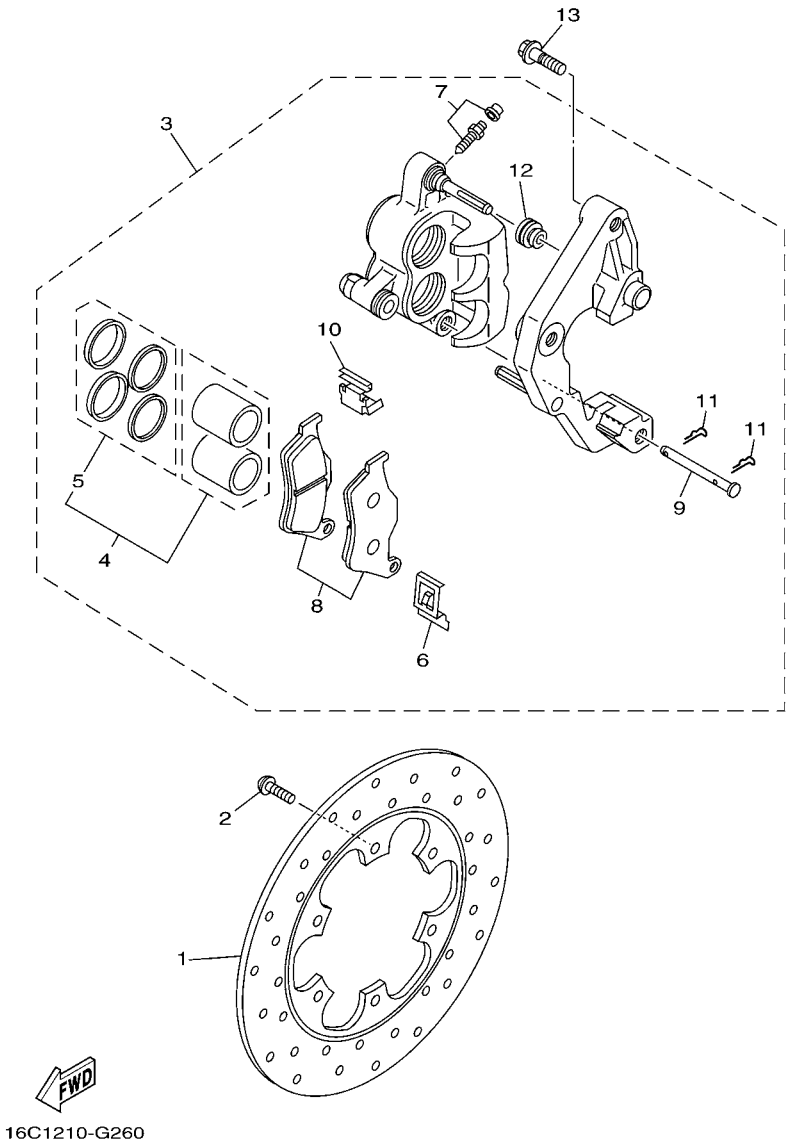

FIG. 26 CALIBRE FRENO DELANTERA FRONT BRAKE CALIPER

REF. Nº	CODIGO Nº PART NO.	DESCRIPCION DESCRIPTION	3P43					OBSERVACIONES REMARKS
1	5US–F582U–00	DISCO DE FRENO (DERECHO) DISK, BRAKE (RIGHT)	1					
2	90110–06819	TORNILLO ALLEN BOLT, HEXAGON SOCKET HEAD	6					
3	5US–F580U–00	CALIBRE COMPLETO (DERECHO) CALIPER ASSY (RIGHT)	1					
4	5US–W0057–00	.PISTON COMPLETO PINZA .PISTON ASSY, CALIPER	1					
5	5US–W0047–00	..JUEGO DE RETENES DE PINZA ..CALIPER SEAL KIT	1					
6	5US–F5977–00	.RESORTE DE RETORNO .SPRING, RETURN	1					
7	5US–W0048–00	.CJTO TORNILLO DE PURGA .BLEED SCREW KIT	1					
8	5US–W0045–00	.JUEGO DE COJIN DE FRENO .BRAKE PAD KIT	1					
9	5US–F5744–00	.PASADOR 2 .PIN 2	1					
10	5US–F5827–00	.CUNA DE CALIBRE .SHIM, CALIPER	1					
11	5US–W0016–00	.PRESILLA .CLIP	2					
12	5US–W0053–00	.DUST COVER .DUST COVER	1					
13	90105–10815	TORNILLO BOLT, FLANGE	2					

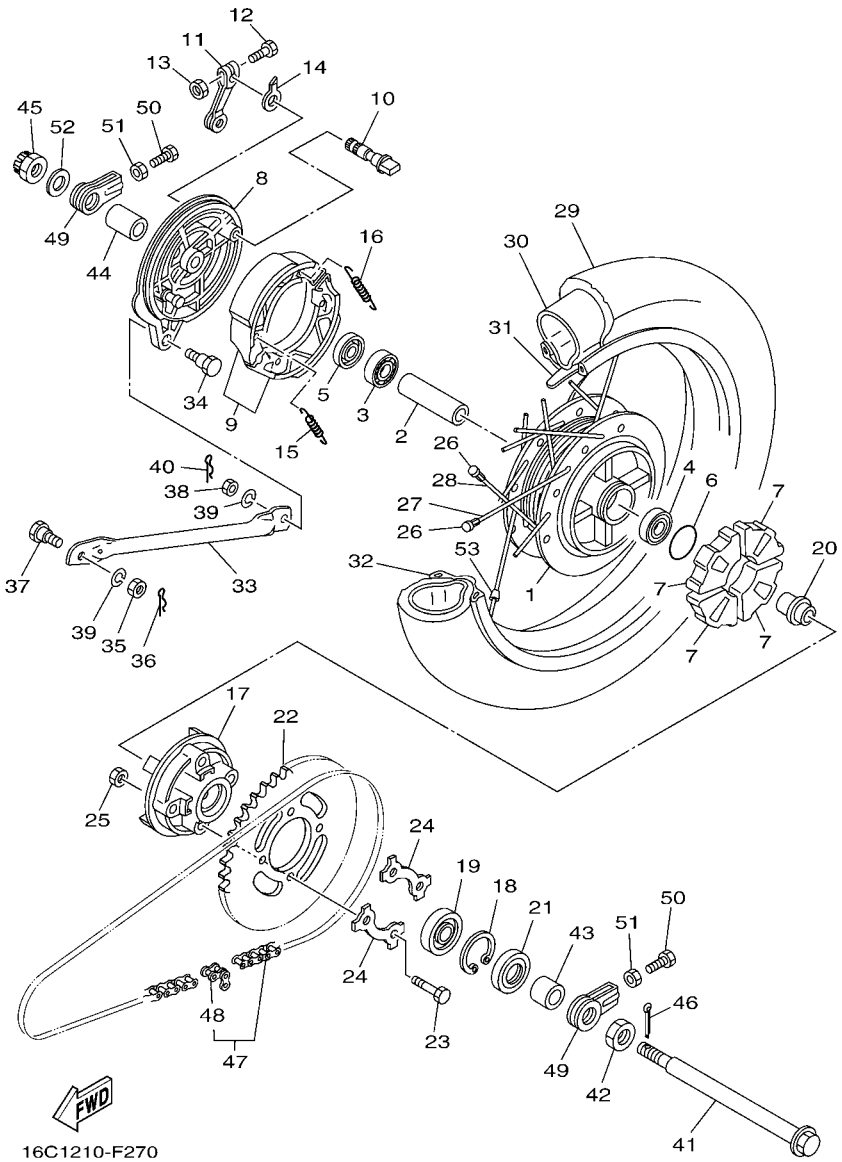

FIG. 27 RUEDA TRASERA REAR WHEEL

REF. Nº	CODIGO Nº PART NO.	DESCRIPCION DESCRIPTION	3P43					OBSERVACIONES REMARKS
1	5US–F5311–00	MASA TRASERA HUB, REAR	1					
2	5US–F5317–00	ESPACIADOR DE COJINETE SPACER, BEARING	1					
3	93306–202Y0	COJINETE BEARING	1					
4	93306–202Y1	COJINETE BEARING	1					
5	93104–22805	SELLO ACEITE OIL SEAL	1					
6	93210–42807	ANILLO O O-RING	1					
7	36L–F5364–00	AMORTIGUADOR DAMPER	4					
8	5US–F5321–00	PLACA DE ZAPATA DE FRENO PLATE, BRAKE SHOE	1					
9	5YY–WF533–00	JUEGO DE ZAPATA DE FRENO BRAKE SHOE KIT	1					
10	5YY–F5351–00	ARBOL DE LEVAS CAMSHAFT	1					
11	5US–F5355–00	PALANCA DE ARBOL DE LEVAS LEVER, CAMSHAFT	1					
12	90101–06278	TORNILLO BOLT	1					
13	9530N–06600	TUERCA NUT,HEX	1					
14	36L–F533A–00	PLACA INDICADOR PLATE, INDICATOR	1					
15	90506–15001	RESORTE DE TENSION SPRING, TENSION	1					
16	90506–12001	RESORTE DE TENSION SPRING, TENSION	1					
17	36L–F5366–10	EMBRAGUE DE MASA CLUTCH, HUB	1					
18	93420–42801	SEGURO CIRCLIP	1					
19	93306–054Y5	COJINETE BEARING	1					
20	5US–F5387–00	EJE DE CORONA AXLE, SPROCKET	1					
21	93106–26801	SELLO ACEITE OIL SEAL	1					
22	5YY–F5445–00	CORONA (45D) SPROCKET, DRIVEN (45T)	1					
23	90109–08361	PERNO BOLT	4					
24	36L–F5412–00	ARANDELA WASHER	2					
25	90179–08816	TUERCA NUT	4					
26	5US–F5395–00	NIPLE NIPPLE, SPOKE	36					
27	5US–F5396–00	RAYOS INTERNO 2 SPOKE, INNER 2	18					

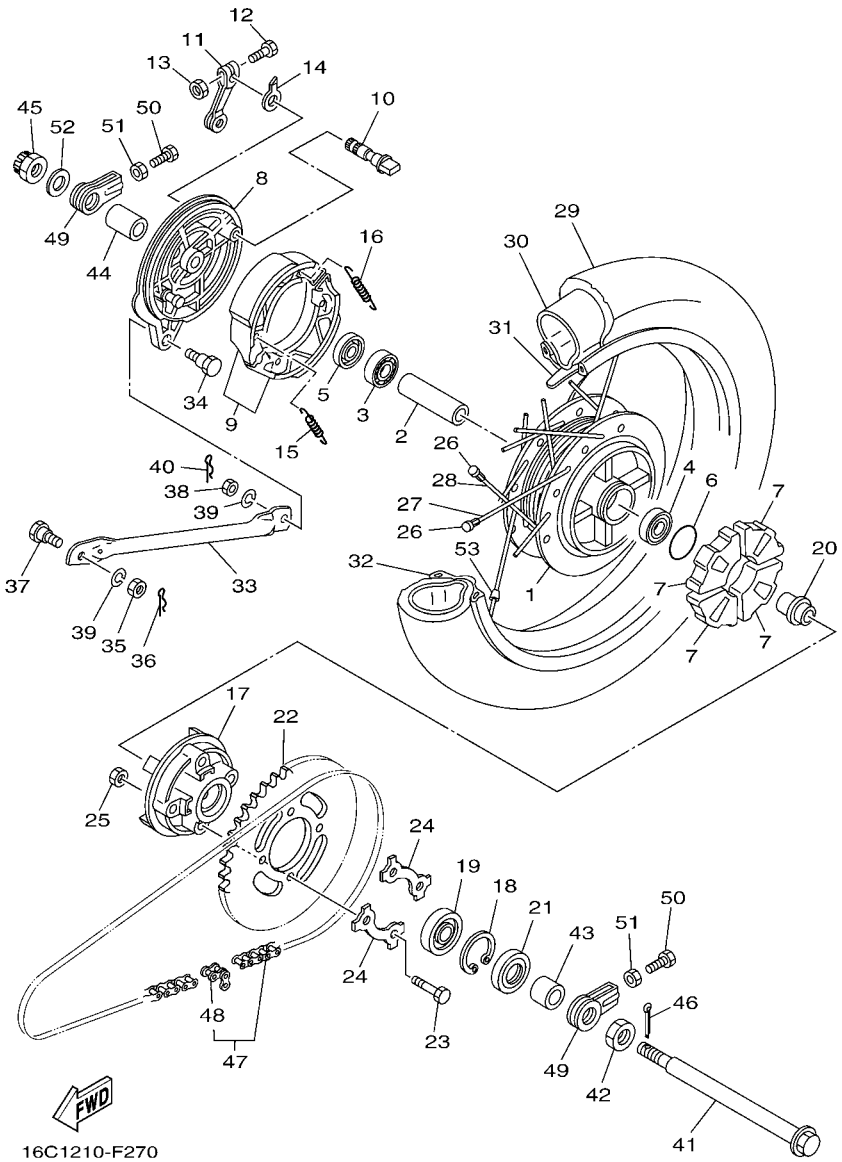

FIG. 27 RUEDA TRASERA REAR WHEEL

REF. Nº	CODIGO Nº PART NO.	DESCRIPCION DESCRIPTION	3P43					OBSERVACIONES REMARKS
28	5US–F5397–00	RAYOS EXTERNO 2 SPOKE, OUTER 2	18					
29	94112–16801	NEUMATICO (120/80-16 60P) TIRE (120/80-16 60P)	1					DUNLOP DUNLOP
30	94212–16800	TUBO(120/80-16) TUBE(120/80-16)	1					FALCON FALCON
31	94312–16800	BANDA DE ARO BAND, RIM	1					
32	5US–F5344–00	ARO (2.50-16) RIM (2.50-16)	1					
33	5US–F5371–00	BARRA TENSORA BAR, TENSION	1					
34	90109–08063	PERNO BOLT	1					
35	9530N–08600	TUERCA NUT	1					
36	90468–12007	PRESILLA CLIP	1					
37	90109–08831	PERNO BOLT	1					
38	9530N–08700	TUERCA NUT	1					
39	92907–08100	ARANDELA WASHER, SPRING	2					
40	91401–20015	CHAVETA PIN, COTTER	1					
41	5US–F5381–00	EJE DE RUEDA AXLE, WHEEL	1					
42	90170–20224	TUERCA NUT	1					
43	5US–F5376–00	COLLAR DE RUEDA COLLAR, WHEEL	1					
44	5US–F5377–00	COLLAR DE RUEDA COLLAR, WHEEL	1					
45	90171–14800	TUERCA ENTALLADA NUT, CASTLE	1					
46	90252–55800	PASADOR DE CHAVETA PIN, COTTER	1					
47	94568–C9130	CADENA CHAIN	1					
48	94680–88001	.CONECTOR DE CADENA(DID 428HG) .JOINT, CHAIN (DID 428HG)	1					
49	36L–F5388–00	TIRADOR DE CADENA 1 PULLER, CHAIN 1	2					
50	90153–08011	TORNILLO HEXAGONAL SCREW, HEXAGON	2					
51	95307–08700	TUERCA NUT	2					
52	92907–14200	ARANDELA WASHER	1					
53	3HT–25398–00	CONTRAPESO DE RUEDA (15G) BALANCER, WHEEL (15G)	1					UN UN

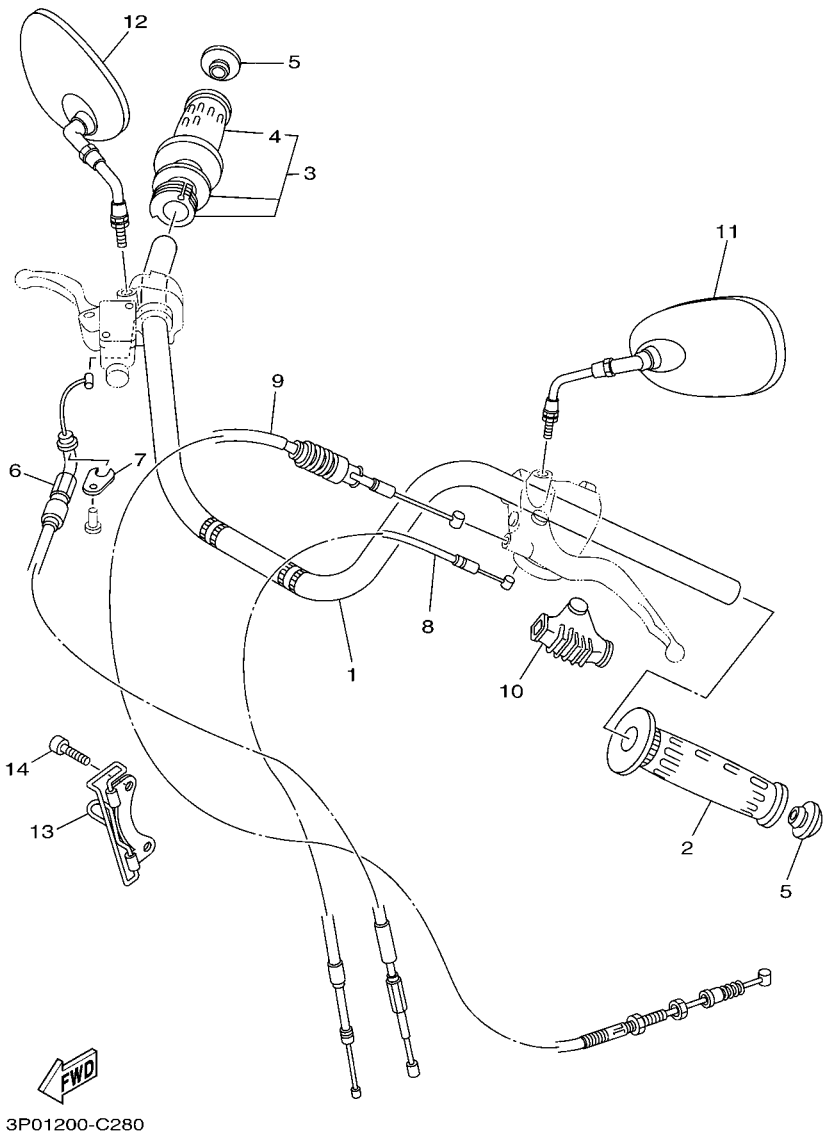

FIG. 28 MANILLAR & CABLE — STEERING HANDLE & CABLE

REF. Nº	CODIGO Nº PART NO.	DESCRIPCION DESCRIPTION	3P43					OBSERVACIONES REMARKS
1	5US–F6111–00	MANUBRIO HANDLEBAR	1					
2	5US–F6241–00	EMPUNADURA GRIP	1					
3	5US–F6240–00	EMPUNADURA COMPLETA GRIP ASSY	1					
4	5US–F6242–00	.EMPUNADURA (MD) .GRIP (RIGHT)	1					
5	5US–F628J–00	TAPA EMPUNADURA CAP, GRIP	2					
6	5US–F6311–00	CABLE DE ACELERADOR 1 CABLE, THROTTLE 1	1					
7	5US–F6393–00	SOPORTE HOLDER	1					
8	5US–F6331–00	CABLE DE ARRANQUE CABLE, STARTER 1	1					
9	5US–F6335–00	CABLE DE EMBRAGUE CABLE, CLUTCH	1					
10	5US–F6372–00	CUBIERTA DE PALANCA DE MANUB 1 COVER, HANDLE LEVER 1	1					
11	5US–F6280–01	ESPEJO COMPLETO (IZQUIERDO) REAR VIEW MIRROR ASSY (LEFT)	1					
12	5US–F6290–01	ESPEJO COMPLETO (DERECHO) REAR VIEW MIRROR ASSY (RIGHT)	1					
13	5US–F6279–10	GUIA DE CABLE GUIDE, CABLE	1					
14	91317–06014	PERNO BOLT	1					

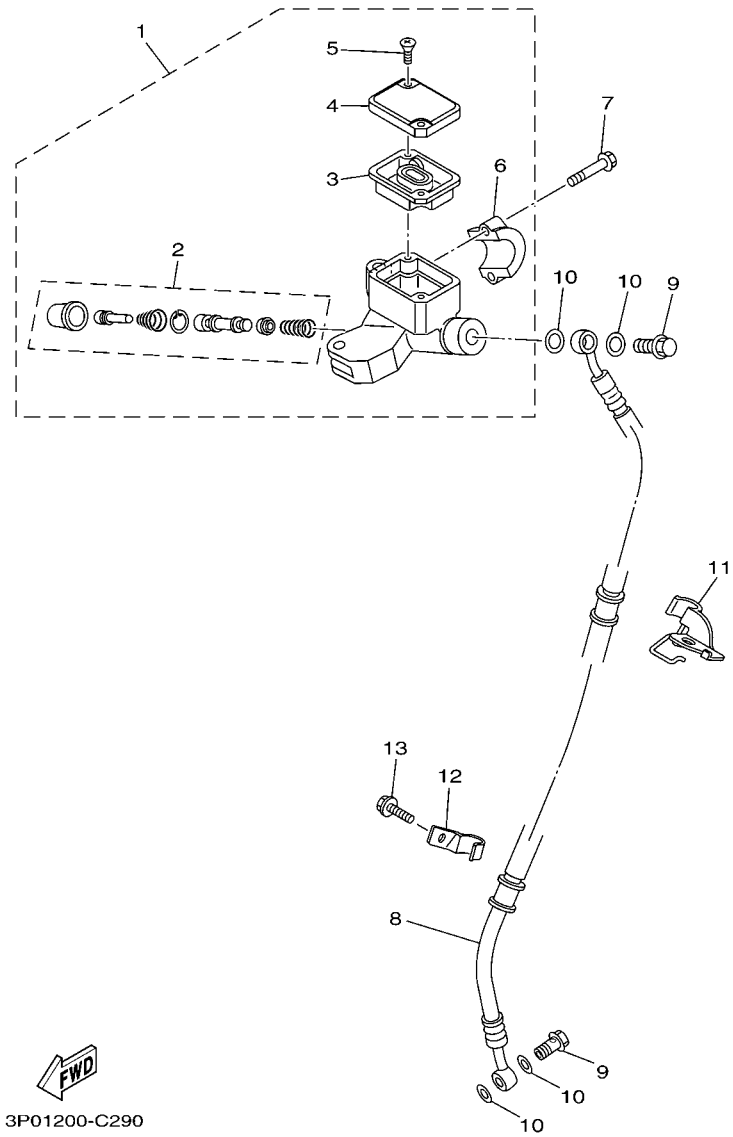

FIG. 29 CILINDRO MAESTRO DELANTERO FRONT MASTER CYLINDER

REF. Nº	CODIGO Nº PART NO.	DESCRIPCION DESCRIPTION	3P43					OBSERVACIONES REMARKS
1	5US–F583T–00	CILINDRO MAESTRO COMPLETO MASTER CYLINDER ASSY	1					
2	5US–W0041–00	.JUEGO DE CILINDRO MAESTRO .CYLINDER KIT, MASTER	1					
3	5US–25854–00	.EMPAQUE,DIAFRAGMA .DIAPHRAGM, RESERVOIR	1					
4	5US–25852–00	.TAPA DE TANQUE DE RESERVA .CAP, RESERVOIR	1					
5	98706–04012	.TORNILLO DE CABEZA PLANA .SCREW, FLAT HEAD	2					
6	5US–25867–00	.SOPORTE DE CILINDRO MAESTRO .BRACKET, MASTER CYLINDER	1					
7	90105–06818	TORNILLO BOLT, FLANGE	2					
8	5US–F5872–00	MANGUERA DE FRENO 1 HOSE, BRAKE 1	1					
9	90401–10813	PERNO DE UNION BOLT, UNION	2					
10	90201–10815	ARANDELA PLANA WASHER, PLATE	4					
11	5US–F5875–00	SOPORTE DE MANGUERA FRENO 1 HOLDER, BRAKE HOSE 1	1					
12	5US–F5886–00	SOPORTE DE MANGUERA FRENO HOLDER, BRAKE HOSE	1					
13	95827–06012	TORNILLO BOLT, FLANGE	1					

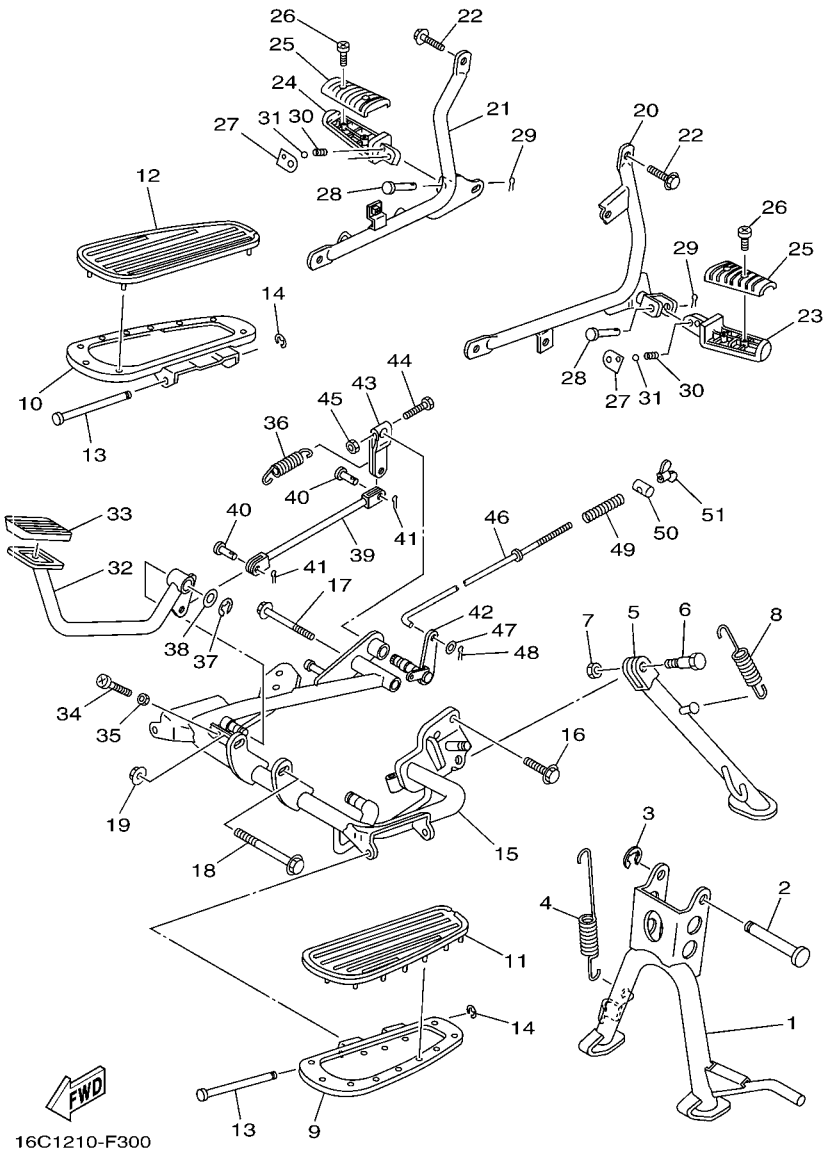

FIG. 30 SOPORTE & APOYAPIE STAND & FOOTREST

REF. Nº	CODIGO Nº PART NO.	DESCRIPCION DESCRIPTION	3P43					OBSERVACIONES REMARKS
1	5US–F7111–00	PUNTAL PRINCIPAL STAND, MAIN	1					
2	5US–F7112–00	EJE DE PUNTAL PRINCIPAL SHAFT, MAIN STAND	1					
3	93430–12821	SEGURO CIRCLIP	1					
4	90506–35517	RESORTE DE TENSION SPRING, TENSION	1					
5	5US–F7311–00	PUNTAL LATERAL STAND, SIDE	1					
6	90109–10474	PERNO BOLT	1					
7	95307–10700	TUERCA NUT	1					
8	90506–28146	RESORTE DE TENSION SPRING, TENSION	1					
9	5US–F7411–00	APOYAPIE 1 FOOTREST 1	1					
10	5US–F7421–00	APOYAPIE 2 FOOTREST 2	1					
11	5US–F7413–00	CUBIERTA DE APOYAPIE COVER, FOOTREST	1					
12	5US–F7423–00	CUBIERTA DE APOYAPIE COVER, FOOTREST	1					
13	5US–F744G–00	PASADOR PIN	2					
14	99001–06600	PRESILLA REDONDA CIRCLIP	2					
15	5US–F7452–00	SOPORTE, DE APOYAPIE 1 BRACKET, FOOTREST 1	1					
16	95807–08025	TORNILLO BOLT, FLANGE	1					
17	95817–08090	TORNILLO BOLT, FLANGE	1					
18	90105–10809	TORNILLO BOLT, FLANGE	1					
19	95707–10500	TUERCA DE BRIDA NUT, FLANGE	1					
20	5US–F7432–00	SOPORTE 1 BRACKET 1	1					
21	5US–F7442–00	SOPORTE 2 BRACKET 2	1					
22	95807–08020	TORNILLO BOLT, FLANGE	2					
23	5US–F7431–00	APOYAPIE POSTERIOR 1 FOOTREST, REAR 1	1					
24	5US–F7441–00	APOYAPIE POSTERIOR 2 FOOTREST, REAR 2	1					
25	5US–F7433–00	CUBIERTA APOYAPIE TRASERO COVER, REAR FOOTREST	2					
26	98517–06012	TORNILLO DE CABEZA CON PLANA SCREW, PAN HEAD	4					
27	5US–F7437–00	ARANDELA ESPECIAL WASHER, SPECIAL	2					

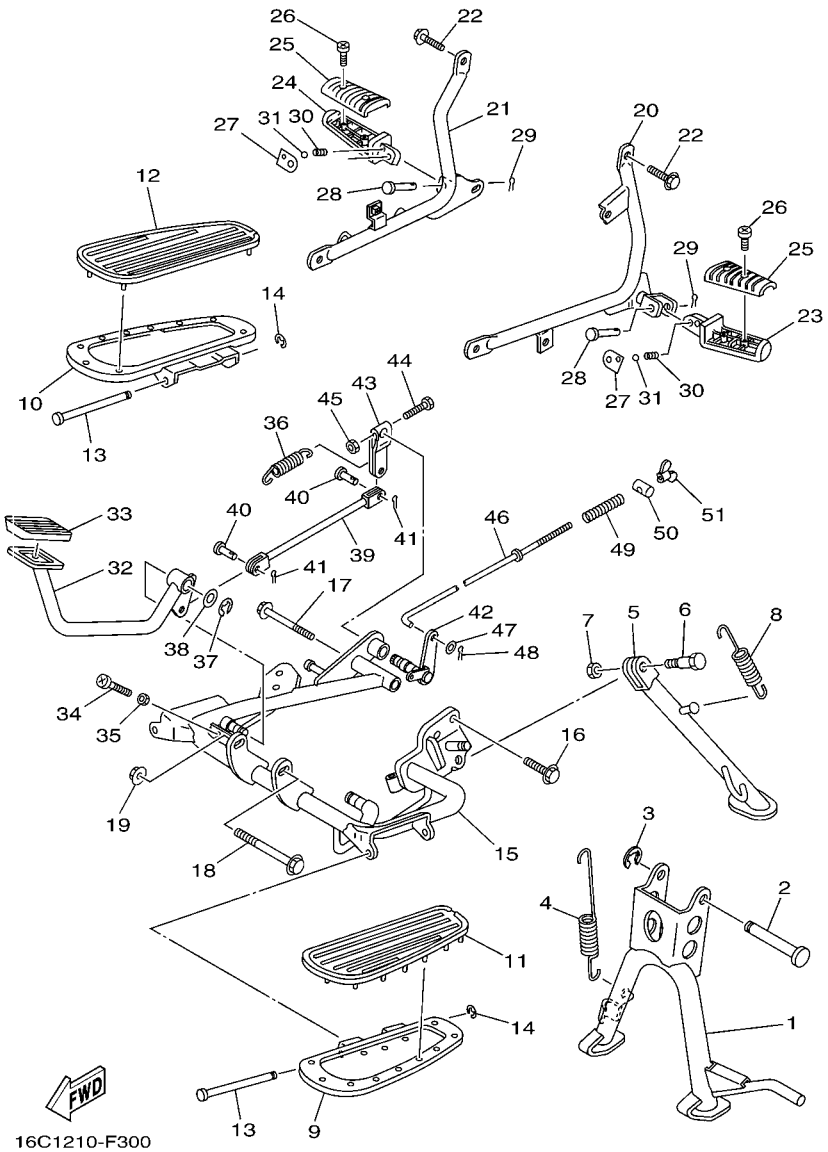

FIG. 30 SOPORTE & APOYAPIE STAND & FOOTREST

REF. Nº	CODIGO Nº PART NO.	DESCRIPCION DESCRIPTION	3P43					OBSERVACIONES REMARKS
28	91701–06032	PASADOR DE ABRAZADERA PIN	2					
29	90252–35802	PASADOR DE CHAVETA PIN, COTTER	2					
30	90501–12743	RESORTE DE COMPRESION SPRING, COMPRESSION	2					
31	93501–04805	BOLA BALL	2					
32	5US–F7211–00	PEDAL DE FRENO PEDAL, BRAKE	1					
33	5US–F7285–00	TAPA CAP	1					
34	98507–06020	TORNILLO DE CABEZA CON PLANA SCREW, PAN HEAD	1					
35	95307–06700	TUERCA NUT	1					
36	90506–20223	RESORTE DE TENSION SPRING, TENSION	1					
37	99009–15400	PRESILLA REDONDA CIRCLIP	1					
38	90201–152L1	ARANDELA PLANA WASHER, PLATE	1					
39	5US–F7247–00	COJIN DE FRENO ROD 1	1					
40	91701–08018	PASADOR DE ABRAZADERA PIN	2					
41	90252–35802	PASADOR DE CHAVETA PIN, COTTER	2					
42	5US–F7204–00	PALANCA COMPLETA LEVER ASSY 1	1					
43	5US–F7262–00	PALANCA LEVER	1					
44	90101–06278	TORNILLO BOLT	1					
45	95307–06600	TUERCA NUT	1					
46	5US–F7231–00	VARILLA DE FRENO ROD, BRAKE	1					
47	9290N–06600	ARANDELA WASHER	1					
48	90252–35802	PASADOR DE CHAVETA PIN, COTTER	1					
49	90501–10245	RESORTE DE COMPRESION SPRING, COMPRESSION	1					
50	90249–12008	PASADOR PIN	1					
51	90179–06806	TUERCA NUT	1					

FIG. 31 GENERADOR GENERATOR

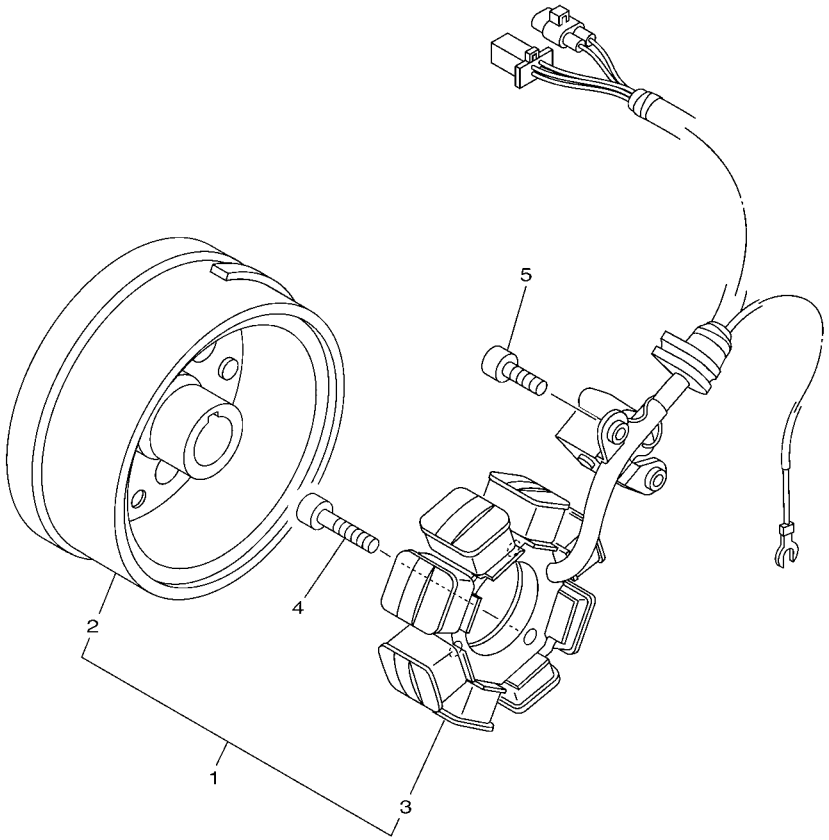

REF. Nº	CODIGO Nº PART NO.	DESCRIPCION DESCRIPTION	3P43					OBSERVACIONES REMARKS
1	5US–H1400–00	GENERADOR MAGNETO C.A. AC MAGNET GENERATOR ASSY	1					
2	5US–H1450–00	.ROTOR COMPLETO .ROTOR ASSY	1					
3	5US–H1410–00	.ESTATOR COMPLETO .STATOR ASSY	1					
4	90110–06811	TORNILLO ALLEN BOLT, HEXAGON SOCKET HEAD	3					
5	90110–06806	TORNILLO ALLEN BOLT, HEXAGON SOCKET HEAD	2					

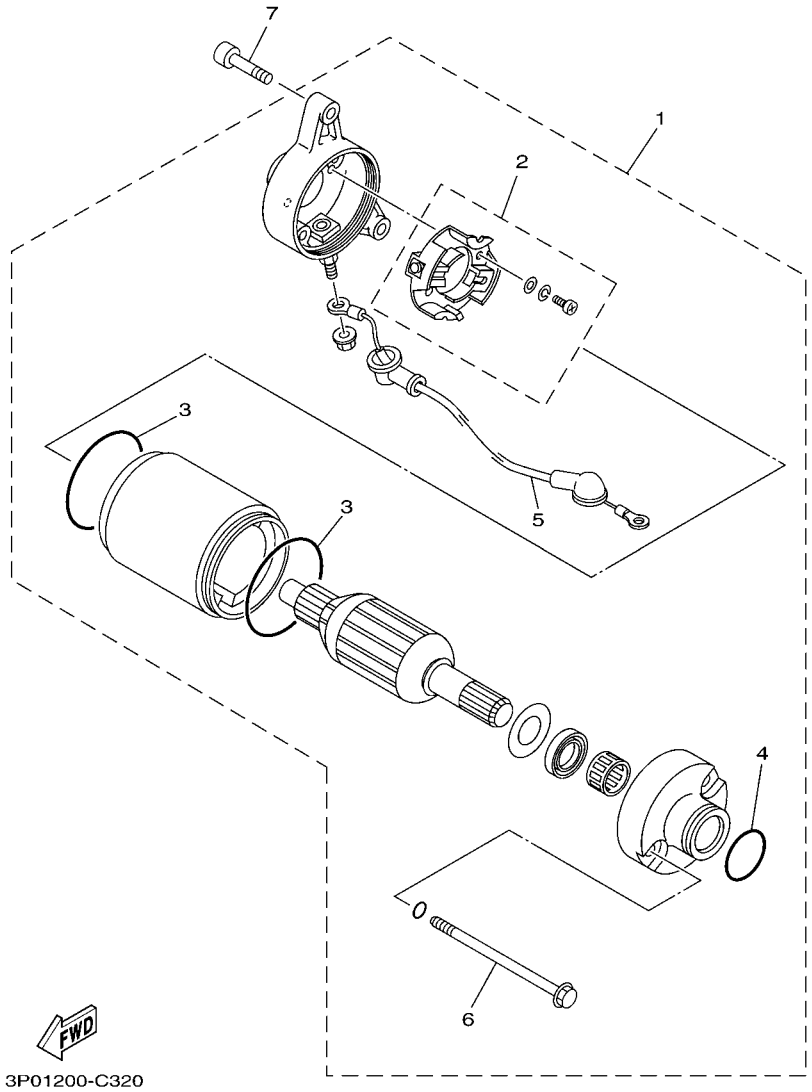

FIG. 32 MOTOR DE ARRANQUE STARTING MOTOR

REF. Nº	CODIGO Nº PART NO.	DESCRIPCION DESCRIPTION	3P43					OBSERVACIONES REMARKS
1	5US–H1800–00	MOTOR DE ARRANQUE COMPLETO STARTING MOTOR ASSY	1					
2	5US–H1801–00	.JUEGO DE ESCOBILLA .BRUSH SET	1					
3	93210–56803	.ANILLO O .O-RING	2					
4	93210–25804	.ANILLO O .O-RING	1					
5	5US–H183G–00	.CABLE DEL MOTOR COMPL. .CORD COMP.	1					
6	90105–05800	.TORNILLO .BOLT, FLANGE	2					
7	90105–06868	TORNILLO BOLT, FLANGE	2					

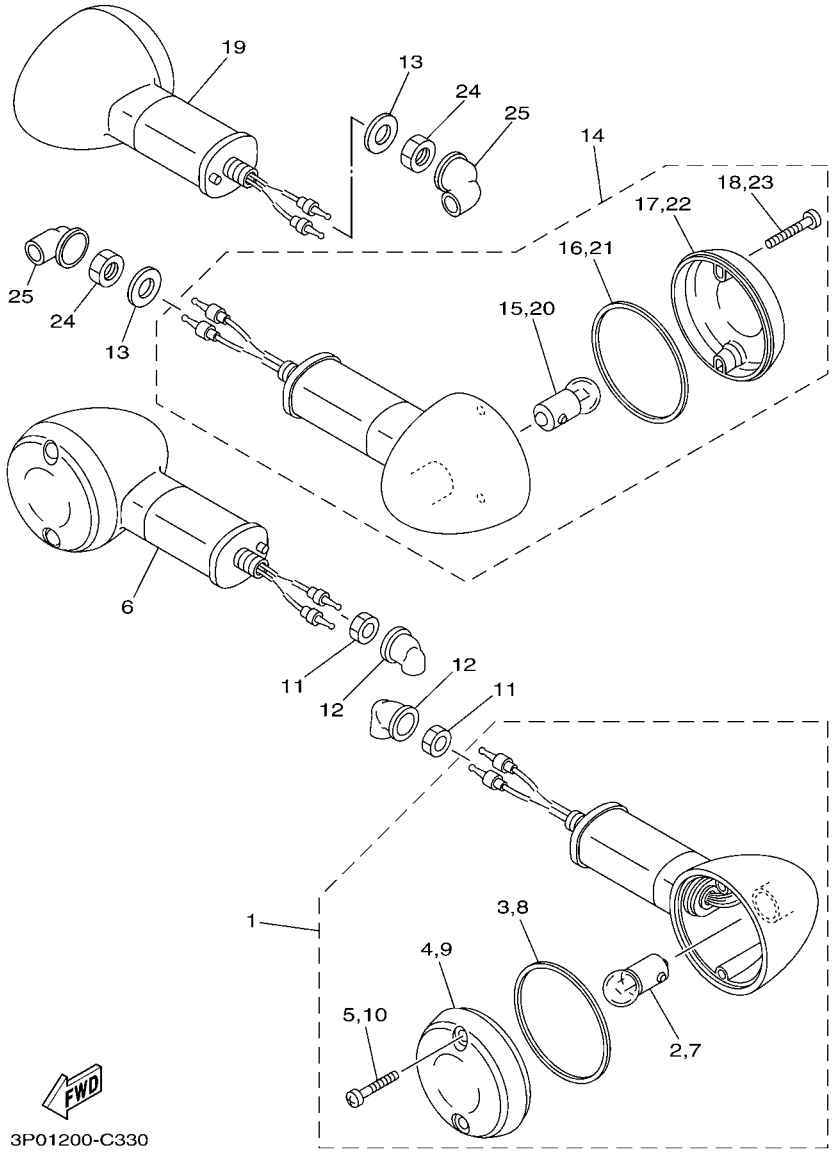

FIG. 33 LUZ DE DESTELLADOR FLASHER LIGHT

REF. Nº	CODIGO Nº PART NO.	DESCRIPCION DESCRIPTION	3P43					OBSERVACIONES REMARKS
1	5US–H3310–00	DESTELLADOR DE LUZ DELANT. FRONT FLASHER LIGHT ASSY 1	1					
2	36L–H3311–00	.BOMBILLA (12V-10W) .BULB, FLASHER (12V-10W)	1					
3	5US–H3313–00	.EMPAQUE DE LENTE DESTELLADOR .GASKET, FLASHER LENS	1					
4	5US–H3312–00	.LENTE DE DESTELLADOR .LENS, FLASHER	1					
5	5US–H3333–00	.TORNILLO ACCESORIO DE LENTE .SCREW, LENS FITTING	2					
6	5US–H3320–00	DESTELLADOR DE LUZ DELANT. FRONT FLASHER LIGHT ASSY 2	1					
7	36L–H3311–00	.BOMBILLA (12V-10W) .BULB, FLASHER (12V-10W)	1					
8	5US–H3313–00	.EMPAQUE DE LENTE DESTELLADOR .GASKET, FLASHER LENS	1					
9	5US–H3312–00	.LENTE DE DESTELLADOR .LENS, FLASHER	1					
10	5US–H3333–00	.TORNILLO ACCESORIO DE LENTE .SCREW, LENS FITTING	2					
11	95304–12600	TUERCA NUT	2					
12	5US–H3365–00	TAPON CAP	2					
13	90201–12749	ARANDELA PLANA WASHER, PLATE	2					
14	5US–H3330–00	DESTELLADOR DE LUZ TRAS.COMPL. REAR FLASHER LIGHT ASSY 1	1					
15	36L–H3311–00	.BOMBILLA (12V-10W) .BULB, FLASHER (12V-10W)	1					
16	5US–H3313–00	.EMPAQUE DE LENTE DESTELLADOR .GASKET, FLASHER LENS	1					
17	5US–H3312–00	.LENTE DE DESTELLADOR .LENS, FLASHER	1					
18	5US–H3333–00	.TORNILLO ACCESORIO DE LENTE .SCREW, LENS FITTING	2					
19	5US–H3340–00	DESTELLADOR DE LUZ TRAS.COMPL. REAR FLASHER LIGHT ASSY 2	1					
20	36L–H3311–00	.BOMBILLA (12V-10W) .BULB, FLASHER (12V-10W)	1					
21	5US–H3313–00	.EMPAQUE DE LENTE DESTELLADOR .GASKET, FLASHER LENS	1					
22	5US–H3312–00	.LENTE DE DESTELLADOR .LENS, FLASHER	1					
23	5US–H3333–00	.TORNILLO ACCESORIO DE LENTE .SCREW, LENS FITTING	2					
24	95304–12600	TUERCA NUT	2					
25	5US–H3365–00	TAPON CAP	2					

FIG. 34 MEDIDOR METER

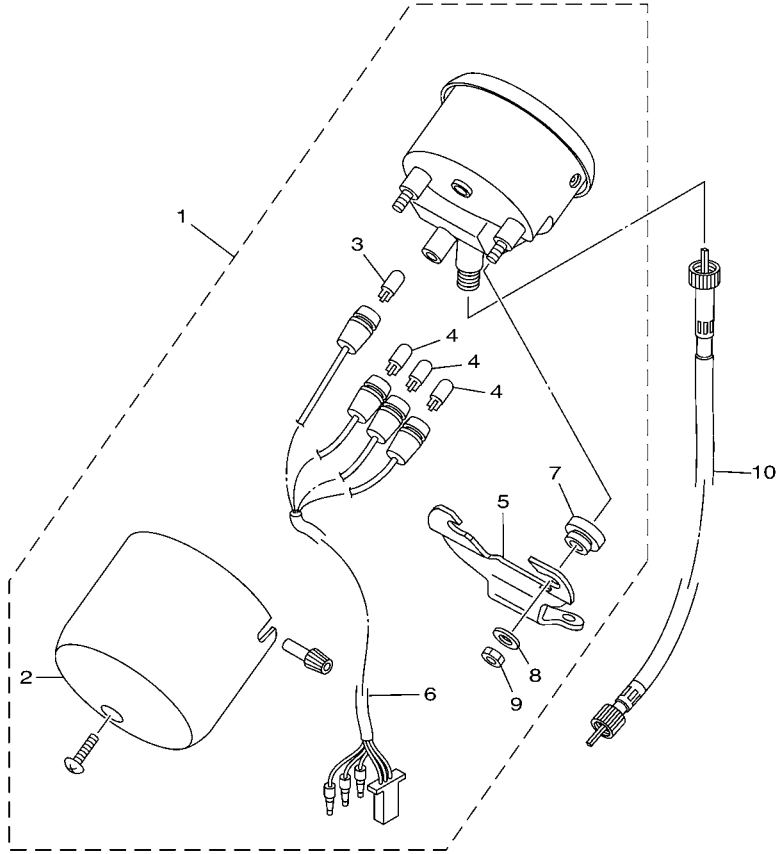

3P01200-C340

REF. Nº	CODIGO Nº PART NO.	DESCRIPCION DESCRIPTION	3P43					OBSERVACIONES REMARKS
1	5US–H3570–00	VELOCIMETRO COMPLETO SPEEDOMETER ASSY	1					
2	5US–H3507–00	.CUBIERTA DE VELOCIMETRO .CASE COMP, UNDER	1					
3	5US–H3517–00	.AMPOLLETA (12V-1.7W) .BULB (12V-1.7W)	1					
4	5US–H3518–00	.AMPOLLETA (14V-3.0W) .BULB, METER (14V-3.0W)	3					
5	5US–H3519–00	.SOPORTE DE MEDIDOR .BRACKET, METER	1					
6	5US–H3509–00	.ENCASTRE DE CABLE COMPLETO .SOCKET CORD ASSY	1					
7	5US–H3523–00	.AMORTIGUADOR .DAMPER	3					
8	5US–H3524–00	.ARANDELA ESPECIAL .WASHER, SPECIAL	3					
9	95301–05600	.TUERCA HEXAGONAL .NUT	3					
10	5US–H3550–10	CABLE DE VELOCIMETRO COMPLETO SPEEDOMETER CABLE ASSY	1					

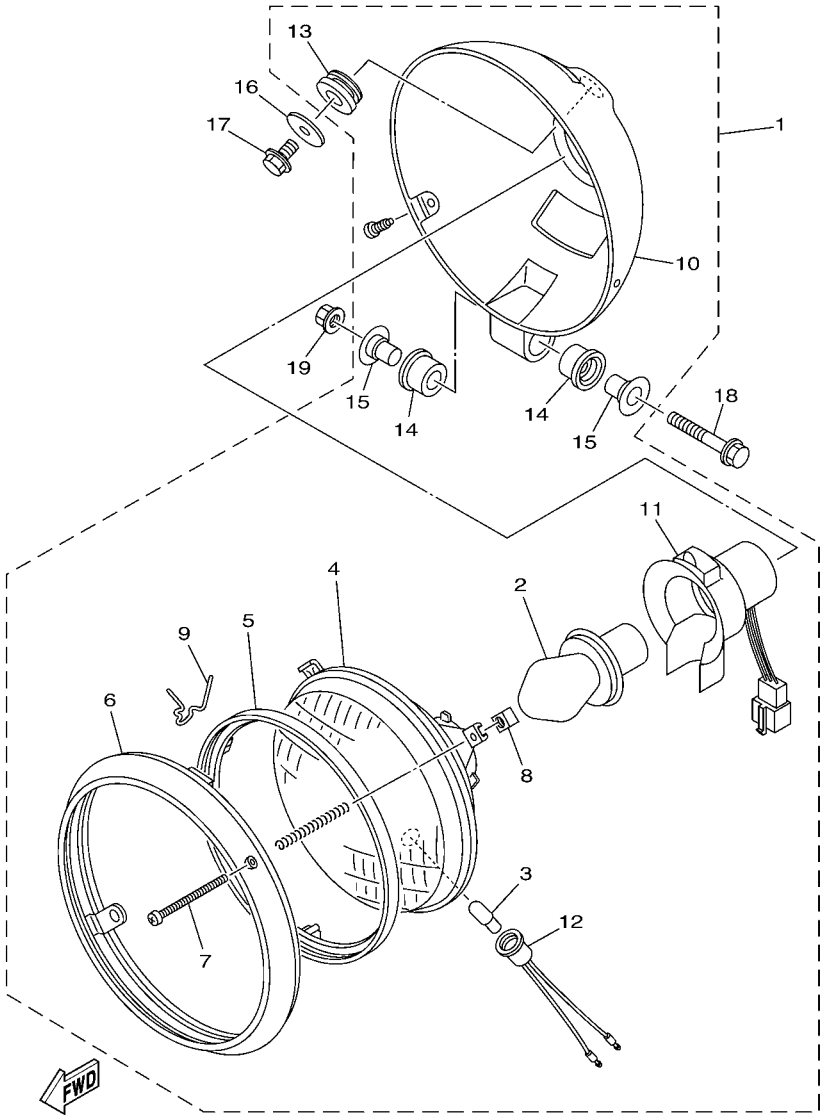

3P01200-C350

FIG. 35 FARO DELANTERO HEADLIGHT

REF. Nº	CODIGO Nº PART NO.	DESCRIPCION DESCRIPTION	3P43					OBSERVACIONES REMARKS
1	5US–H4300–00	FARO DELANTERO COMPLETO HEADLIGHT ASSY	1					
2	36L–H4314–00	.BOMBILLA (12V-35/35W) .BULB, HEADLIGHT (12V-35/35W)	1					
3	4LS–H3516–00	.AMPOLLETA .BULB	1					
4	5US–H4321–00	.LENTE COMPLETO .LENS ASSY	1					
5	5US–H4395–00	.ANILLO DE RETEN .RING, RETAINING	1					
6	5US–H4315–00	.ARO DE FARO DELANTERO .RIM, HEADLIGHT	1					
7	5US–H4331–00	.TORNILLO DE AJUSTE DE ARO .SCREW, RIM ADJUSTING	1					
8	5US–H4334–00	.TUERCA DE AJUSTE .NUT, ADJUSTING	1					
9	5US–H4124–00	.JUEGO DE RESORTES .SPRING, SET	1					
10	5US–H4130–00	.CUERPO COMPL FARO DELANTERO .BODY ASSY, HEADLIGHT	1					
11	5US–H4340–00	.ENCASTRE DE CABLE COMPLETO .SOCKET CORD ASSY 1	1					
12	5US–H4350–00	.ENCASTRE DE CABLE COMPLETO .SOCKET CORD ASSY 2	1					
13	5US–H4164–00	.AMORTIGUADOR .DAMPER	1					
14	5US–H4163–00	.AMORTIGUADOR .DAMPER	2					
15	5US–H4145–00	.COLLAR ACCESORIO DE CUERPO .COLLAR, BODY FITTING	2					
16	90201–060A3	ARANDELA PLANA WASHER, PLATE	1					
17	95807–06014	TORNILLO BOLT, FLANGE	1					
18	95824–06045	TORNILLO BOLT, FLANGE	1					
19	95704–06500	TUERCA DE BRIDA NUT, FLANGE	1					

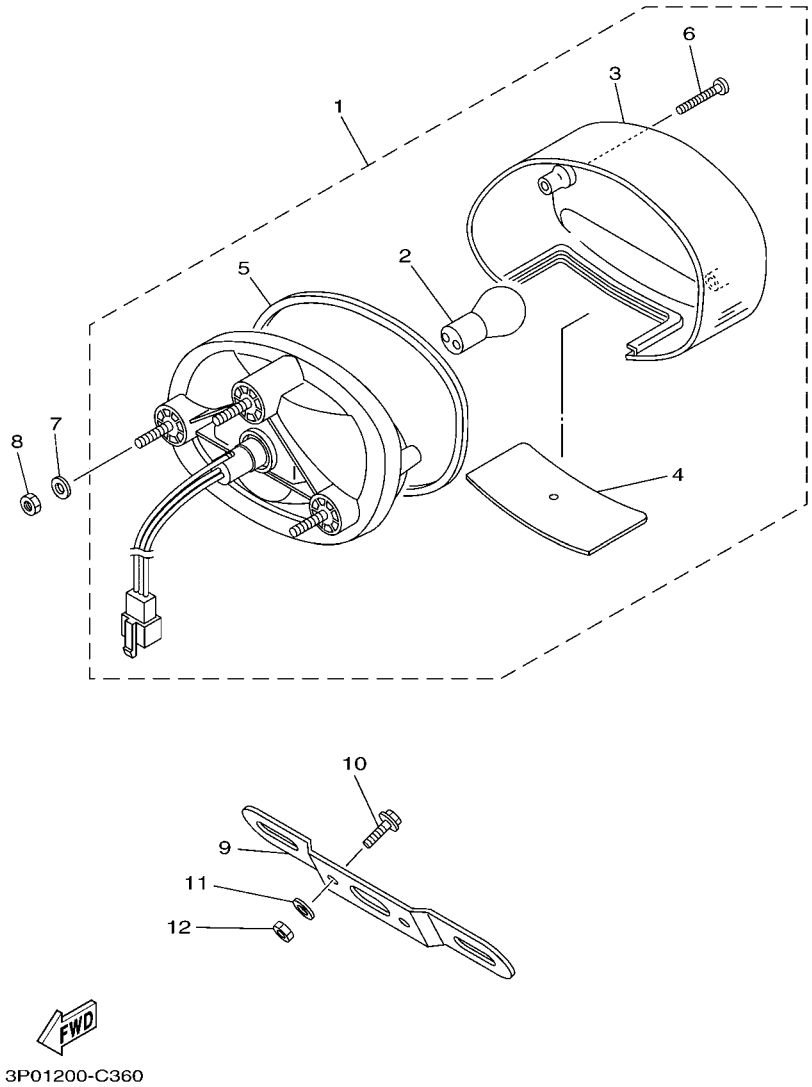

FIG. 36 LUZ DE COLA — TAILLIGHT

REF. Nº	CODIGO Nº PART NO.	DESCRIPCION DESCRIPTION	3P43					OBSERVACIONES REMARKS
1	5US–H4700–00	FARO TRASERO COMPLET. TAILLIGHT ASSY	1					
2	36L–H4714–10	.BOMBILLA (12V-21/5W) .BULB (12V-21/5W)	1					
3	5US–H4721–00	.LENTE DE FARO TRASERO .LENS, TAILLIGHT	1					
4	5US–H4743–00	.LENTE DE LUZ DE LICENCIA .LENS, LICENCE LIGHT	1					
5	5US–H4723–00	.EMPAQUE LENTE FARO TRASERO .GASKET, TAIL LENS	1					
6	9770N–40620	.TORNILLO ROSCA HEMBRA .SCREW, TAPPING	2					
7	90201–06380	ARANDELA PLANA WASHER PLAIN	3					
8	95607–06100	TUERCA AUTOBLOCANTE NUT, U	3					
9	5US–H4751–00	SOPORTE DE LICENCIA BRACKET, LICENSE	1					
10	95807–06012	TORNILLO BOLT, FLANGE	2					
11	90201–06380	ARANDELA PLANA WASHER PLAIN	2					
12	95307–06600	TUERCA NUT	2					

FIG. 37 INTERRUPTOR DE MANILLAR&PALANC HANDLE SWITCH & LEVER

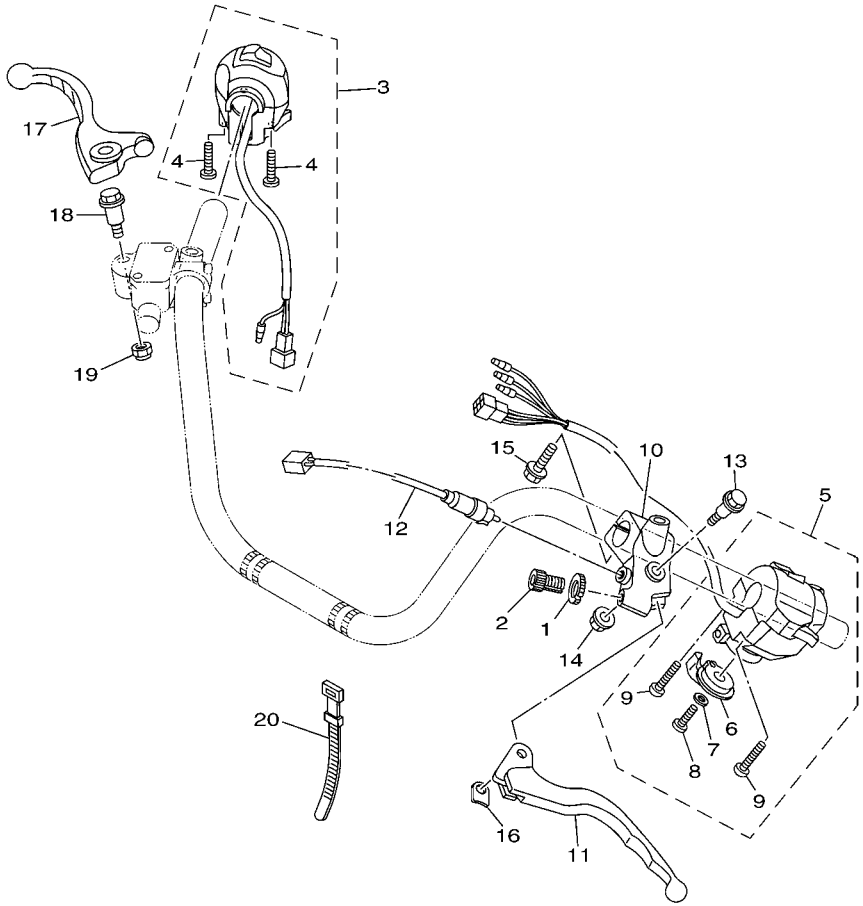

3P43210-L370

REF. Nº	CODIGO Nº PART NO.	DESCRIPCION DESCRIPTION	3P43					OBSERVACIONES REMARKS
1	90179–08148	TUERCA NUT	1					
2	90123–08046	PERNO BOLT	1					
3	5US–H3975–30	INTERRUPTOR DE MANIJA 2 SWITCH, HANDLE 2	1					
4	98507–06918	.TORNILLO DE CABEZA PLANA .SCREW, PAN HEAD	2					
5	5US–H3973–00	INTERRUPTOR DE MANIJA 3 SWITCH, HANDLE 3	1					
6	4TL–H3941–00	.PALANCA DE ARRANQUE .LEVER, STARTER	1					
7	92907–06200	.ARANDELA .WASHER	1					
8	98507–06008	.TORNILLO DE CABEZA PLANA .SCREW, PAN HEAD	1					
9	98507–06035	.TORNILLO DE CABEZA PLANA .SCREW, PAN HEAD	2					
10	5US–H2911–00	SOPORTE DE LEVA 1 HOLDER, LEVER 1	1					
11	5US–H3912–00	PALANCA 1 LEVER 1	1					
12	5US–H2917–00	INTERRUPTOR SWITCH	1					
13	90109–06863	PERNO BOLT	1					
14	95707–06300	TUERCA DE BRIDA NUT, NYLON	1					
15	97507–06425	PERNO CON ARANDELA BOLT, WITH WASHER	1					
16	36L–H3929–V0	PLACA DE RESORTE PLATE, SPRING	1					
17	5US–H3922–10	PALANCA 2 LEVER 2	1					
18	90109–06811	PERNO BOLT	1					
19	90185–06802	TUERCA AUTOBLOCANTE NUT, SELF-LOCKING	1					
20	36L–H3936–00	BANDA DE CABLE DE INTERRUPTOR BAND, SWITCH CORD	4					

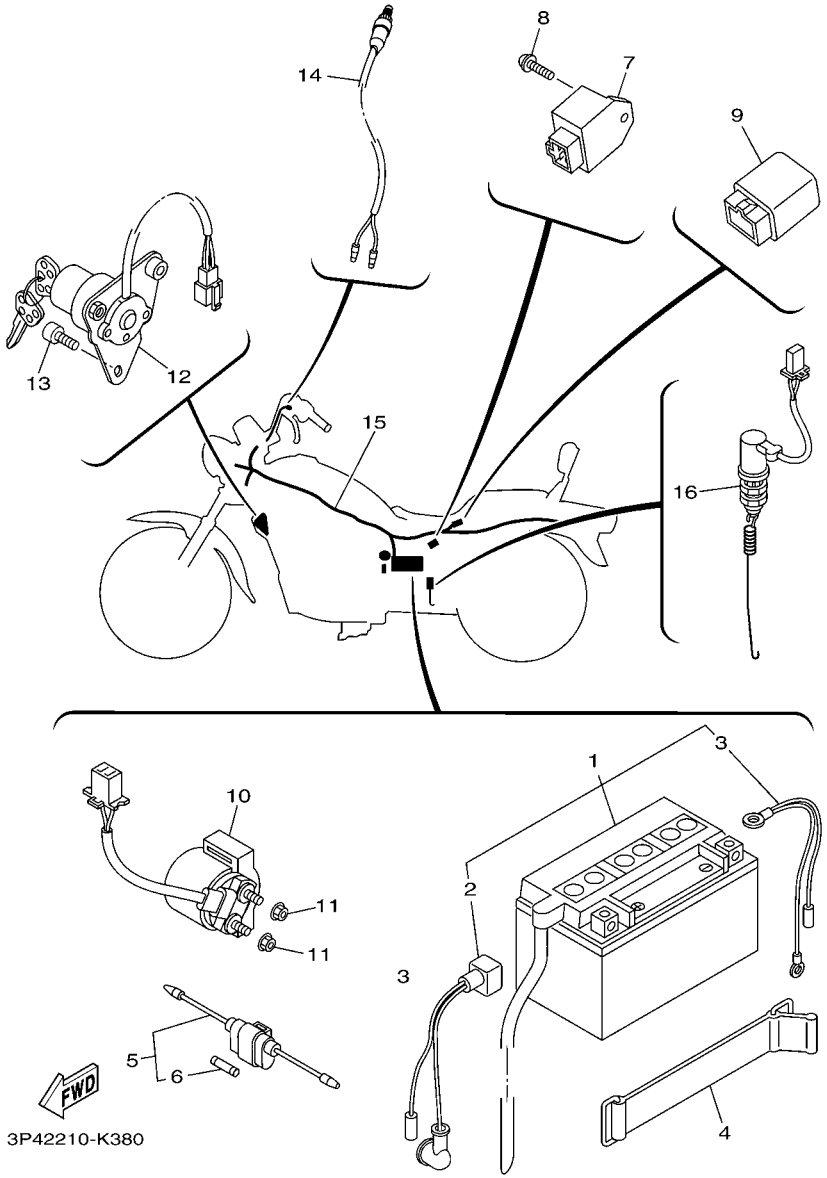

FIG. 38 EQUIPO ELECTRICO 1 ELECTRICAL 1

REF. Nº	CODIGO Nº PART NO.	DESCRIPCION DESCRIPTION	3P43					OBSERVACIONES REMARKS
1	5US–H2100–10	BATERIA COMPLETA (YTX7A-BS) BATTERY ASSY (YTX7A-BS)	1					
2	5US–H2115–00	.CABLE CONDUCTOR POSITIVO .WIRE, PLUS LEAD	1					
3	5US–H2116–00	.CABLE CONDUCTOR NEGATIVO .WIRE, MINUS LEAD	1					
4	5US–H2124–00	BANDA DE BATERIA BAND, BATTERY	1					
5	36L–H2150–V0	PORTA-FUSIBLES COMPLETO FUSE HOLDER ASSY	1					
6	36L–H2151–V0	.FUSIBLE (10A) .FUSE (10A)	2					
7	5KA–H1960–00	RECTIFICADOR Y REGULADOR RECTIFIER & REGULATOR ASSY	1					
8	97607–06216	TORNILLO CAB CON PLANA C/ARAN SCREW,WITH WASHER	1					
9	5US–H1950–00	RELE COMPLETO RELAY ASSY	1					
10	5US–H1940–00	CONJUNTO ARRANCADOR RELEVO STARTER RELAY ASSY	1					
11	95707–06500	TUERCA DE BRIDA NUT, FLANGE	2					
12	5US–H2510–10	CONJUNTO DE LLAVE IGNICION MAIN SWITCH ASSY	1					
13	91317–06014	PERNO BOLT	1					
14	5US–H3980–00	INTERRUP. DE PARADA DELANTERO FRONT STOP SWITCH ASSY	1					
15	5US–H2590–20	CONJUNTO DE CABLES WIRE HARNESS ASSY	1					
16	5US–H2530–00	INTERRUPTOR DE PARADA COMPLETO STOP SWITCH ASSY	1					

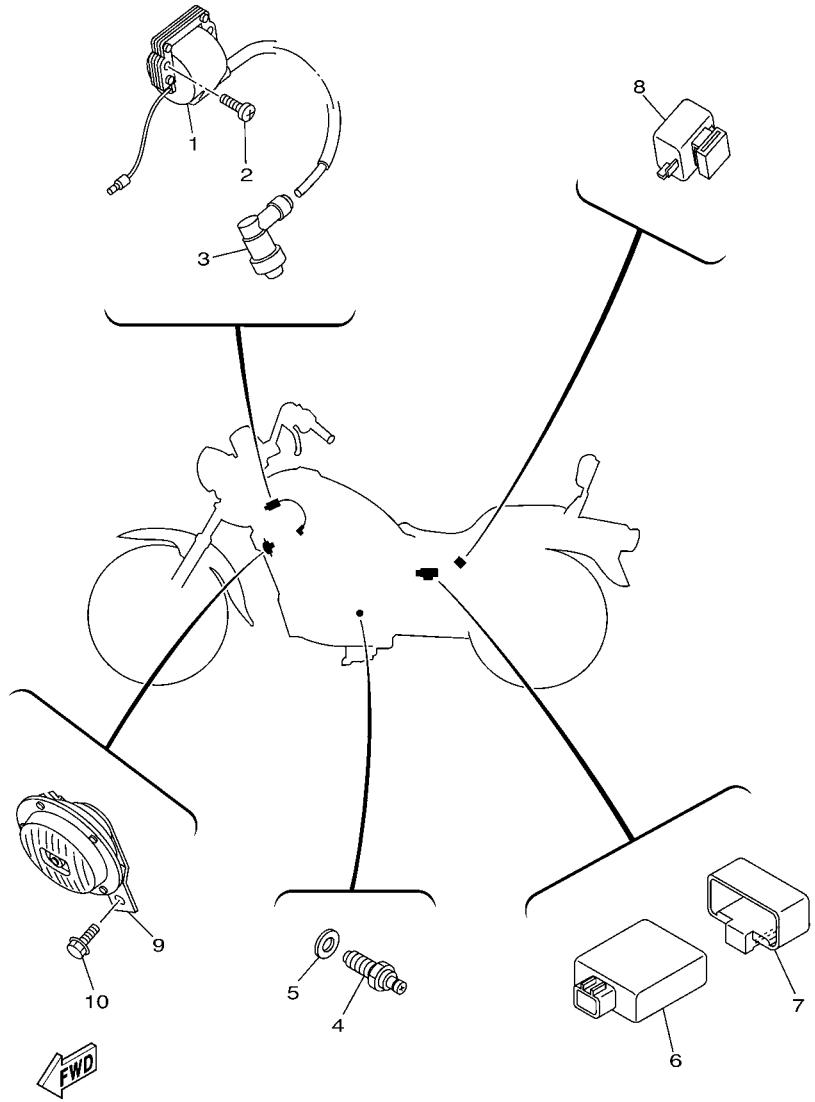

3P01200-C390

FIG. 39 EQUIPO ELECTRICO 2 ELECTRICAL 2

REF. Nº	CODIGO Nº PART NO.	DESCRIPCION DESCRIPTION	3P43					OBSERVACIONES REMARKS
1	5US–H2310–00	BOBINA DE ENCENDIDO COMPLETA IGNITION COIL ASSY	1					
2	98907–06025	TORNILLO DE LIGAR SCREW, BIND	2					
3	4LS–H2370–00	TAPON DE BUJIA COMPLT PLUG CAP ASSY	1					
4	4LS–H2540–00	INTERRUPTOR NEUTRAL COMPL NEUTRAL SWITCH ASSY	1					
5	90430–10148	JUNTA GASKET	1					
6	5US–H5540–00	UNIDAD C.D.I. COMPLETA C.D.I. UNIT ASSY	1					
7	5US–H5546–10	BANDA BAND	1					
8	5KA–H3350–00	RELE DE DESTELLADOR COMPL. FLASHER RELAY ASSY	1					
9	5US–H3371–10	BOCINA HORN	1					
10	95827–06012	TORNILLO BOLT, FLANGE	1					

INDICE NUMERICO
NUMERICAL INDEX

CODIGO Nº PART NO.	REF. Nº
4LS–11603–00	2 – 11
4LS–11605–00	2 – 11
4LS–11607–00	2 – 11
2TK–11633–00	2 – 9
4LS–11636–00	2 – 8
4LS–11638–00	2 – 8
5HH–14103–00	7 – 8
5DG–14106–00	7 – 4
5KA–14107–15	7 – 20
4LS–1410A–00	7 – 7
5HH–14112–25	7 – 6
4LS–14126–00	7 – 5
4LS–14131–00	7 – 3
174–14134–00	7 – 13
3H1–14142–17	7 – 16
4LS–14145–00	7 – 15
3H1–14147–00	7 – 10
878–14147–00	7 – 27
4LS–14158–00	7 – 28
4LS–14181–00	7 – 26
24W–14184–00	7 – 14
5HH–14185–00	7 – 19
127–14186–00	7 – 21
4LS–14191–00	7 – 9
2AL–14196–00	7 – 25
4LS–14197–10	7 – 22
620–1423A–69	7 – 17
583–14561–00	7 – 18
5US–1490J–00	7 – 2
4LS–14923–20	7 – 12
3H1–14962–00	7 – 11
5AP–15517–02	12 – 5
3HT–25398–00	25 – 18
	27 – 53
5US–25852–00	29 – 4
5US–25854–00	29 – 3
5US–25867–00	29 – 6
4LS–E1111–01	1 – 1
4LS–E111F–00	4 – 2
5US–E1142–10	1 – 18
5US–E1152–00	1 – 19
4LS–E1161–00	1 – 3
4LS–E1166–00	9 – 6
4LS–E1167–00	9 – 3
4LS–E1181–00	1 – 11
4LS–E1185–00	1 – 2
4LS–E1186–00	1 – 6
5US–E1191–00	1 – 17

CODIGO Nº PART NO.	REF. Nº
5US–E1192–00	1 – 24
4LS–E1310–01	1 – 14
5YY–E1351–00	1 – 15
5US–E1400–00	2 – 1
4LS–E1422–00	2 – 5
4LS–E1500–02	2 – 12
4LS–E1536–00	2 – 6
4LS–E1631–01	2 – 8
4LS–E1651–01	2 – 4
4LS–E1681–00	2 – 2
4LS–E2111–10	3 – 1
5YY–E2113–00	3 – 5
4LS–E2116–00	3 – 4
4LS–E2117–00	3 – 7
4LS–E2118–00	3 – 6
4LS–E2119–00	3 – 3
4LS–E2121–10	3 – 2
5YY–E2151–00	3 – 8
4LS–E2156–00	3 – 11
4LS–E2159–01	3 – 9
4LS–E2170–00	4 – 1
4LS–E2176–01	4 – 4
4LS–E2210–10	4 – 12
5YY–E2213–00	4 – 13
4LS–E2231–00	4 – 8
4LS–E2241–10	4 – 9
5YY–E3300–00	5 – 1
4LS–E3324–00	5 – 13
5KA–E3325–20	5 – 2
4LS–E3329–00	5 – 8
4LS–E3411–00	5 – 12
4LS–E3451–00	5 – 14
4LS–E3569–00	6 – 2
5DG–E3586–01	6 – 1
5US–E4101–00	7 – 1
3P4–E4411–00	6 – 7
5US–E4412–00	6 – 8
5US–E4437–00	6 – 11
4LS–E443E–00	6 – 16
5US–E4450–00	6 – 9
5US–E4452–00	6 – 12
5US–E4453–00	6 – 10
5US–E4456–00	6 – 13
3AH–E4613–00	8 – 3
5US–E4703–10	8 – 1
5US–E4718–00	8 – 6
5US–E4748–00	8 – 10
5YY–E5111–10	9 – 1

CODIGO Nº PART NO.	REF. Nº
5YY–E5118–10	9 – 8
4LS–E5191–00	10 – 12
4LS–E5362–00	10 – 21
4LS–E5411–00	10 – 2
5US–E5418–00	10 – 14
5YY–E5421–10	10 – 17
4LS–E5441–00	9 – 12
5YY–E5451–00	10 – 3
5YY–E5461–01	10 – 18
5VL–E5512–00	12 – 1
5US–E5521–00	12 – 2
5US–E5532–00	12 – 3
5US–E5590–00	12 – 7
4LS–E5598–00	4 – 10
36L–E5618–00	11 – 12
5YY–E5620–10	11 – 11
5YY–E5641–00	11 – 2
5RE–E5651–01	11 – 8
5US–E5661–03	11 – 1
5YY–E5666–00	11 – 7
5YY–E5671–00	11 – 5
5YY–E6111–00	13 – 1
5RE–E6150–20	13 – 5
4LS–E6154–00	13 – 6
5KA–E6321–10	13 – 8
5RE–E6324–10	13 – 9
5RE–E6351–00	13 – 10
4LS–E6356–00	13 – 14
4LS–E6357–01	13 – 20
4LS–E6358–00	13 – 13
4LS–E6371–00	13 – 7
4LS–E6381–01	13 – 21
5RE–E7121–10	14 – 5
5RE–E7131–10	14 – 2
5RE–E7141–10	14 – 6
5RE–E7211–10	14 – 18
5RE–E7221–10	14 – 14
5RE–E7231–10	14 – 17
5RE–E7241–10	14 – 13
5RE–E7258–00	14 – 20
5RE–E7402–10	14 – 12
5RE–E7411–10	14 – 1
4LS–E7456–00	14 – 25
4LS–E7471–00	14 – 10
5US–E8110–00	16 – 9
5US–E8112–00	16 – 14
5US–E8113–00	16 – 10
5US–E8115–00	16 – 13

CODIGO Nº PART NO.	REF. Nº
4LS–E8140–01	16 – 1
4LS–E8185–00	15 – 2
4LS–E8337–00	16 – 2
5KA–E8511–20	15 – 5
5KA–E8512–20	15 – 6
36L–E8531–00	15 – 7
36L–E8535–00	15 – 8
5KA–E8540–20	15 – 1
16C–F1110–00	17 – 1
5US–F1315–00	17 – 3
5US–F1316–00	17 – 8
5US–F1399–00	17 – 15
5US–F139X–00	17 – 4
5US–F1510–00–H9	18 – 1
5US–F1510–20–P0	18 – 1
5US–F1510–30–P0	18 – 1
5DG–F1518–00	18 – 3
5US–F157B–00	18 – 37
5US–F1581–10	18 – 4
5US–F1611–00	18 – 5
5US–F1621–00	18 – 43
5US–F1621–10	18 – 44
5US–F1629–00	18 – 38
5US–F1639–00	18 – 8
5US–F163A–00–H9	18 – 9
5US–F163A–20–P0	18 – 9
5US–F163A–30–P0	18 – 9
5US–F163E–00–H9	18 – 14
5US–F163E–20–P0	18 – 14
5US–F163E–30–P0	18 – 14
5US–F163F–00–H9	18 – 19
5US–F163F–00–P0	18 – 19
5US–F163F–00–P1	18 – 19
5US–F164F–00	18 – 25
5US–F164G–00	18 – 29
5US–F164H–00	18 – 33
5US–F1665–00	18 – 42
5US–F1710–20–0X	19 – 1
5US–F1710–40–1X	19 – 1
5US–F1710–50–0X	19 – 1
5US–F1717–00	19 – 14
5US–F171L–00	18 – 12
5US–F171M–00	18 – 17
5US–F1720–20–0X	19 – 3
5US–F1720–40–1X	19 – 3
5US–F1720–50–0X	19 – 3
5US–F172A–00–H9	18 – 20
5US–F172A–20–P0	18 – 20

CODIGO Nº PART NO.	REF. Nº
5US–F172A–30–P0	18 – 20
5US–F172F–00–H9	18 – 22
5US–F172F–20–P0	18 – 22
5US–F172F–30–P0	18 – 22
5US–F1731–00	19 – 5
5US–F173B–00	19 – 2
5US–F173B–10	19 – 2
5US–F173T–00	18 – 13
	18 – 18
5US–F174B–00	19 – 4
5US–F174B–10	19 – 4
5US–F177G–00	19 – 12
2YA–F1780–00	19 – 8
5US–F1781–00	21 – 23
36L–F2123–00	20 – 2
5US–F2141–00	20 – 3
5US–F2151–00	20 – 6
5US–F2210–02	20 – 9
5US–F2216–00	20 – 10
5US–F2226–00	20 – 11
5US–F2311–00	20 – 7
5US–F3100–02	22 – 1
5US–F3102–00	22 – 2
5US–F3103–00	22 – 19
5US–F3110–00	22 – 4
	22 – 21
5US–F3118–00	22 – 14
	22 – 31
5US–F3126–00	22 – 3
5US–F3136–00	22 – 20
5US–F3141–00	22 – 12
	22 – 29
4LS–F3142–00	22 – 13
	22 – 30
5YY–F3144–10	22 – 11
	22 – 28
	22 – 39
5YY–F3145–10	22 – 9
	22 – 26
5KA–F3147–00	22 – 16
	22 – 33
36L–F3152–00	22 – 18
	22 – 35
4LS–F3153–00	22 – 10
	22 – 27
36L–F3157–00	22 – 17
	22 – 34
36L–F3158–00	22 – 7

CODIGO Nº PART NO.	REF. Nº
36L–F3158–00	22 – 24
36L–F3159–00	22 – 37
5US–F3170–00	22 – 5
	22 – 22
5US–F3173–00	22 – 6
	22 – 23
5US–F3174–00	21 – 20
5US–F317E–00	21 – 18
36L–F3181–00	22 – 8
	22 – 25
5US–F3194–00	22 – 15
	22 – 32
5US–F331X–00	22 – 36
36L–F3346–00	22 – 38
5US–F3391–00	21 – 22
36L–F3411–00	22 – 40
36L–F3412–00	21 – 2
5UC–F3413–00	21 – 3
5UC–F3414–00	21 – 1
5US–F3416–00	21 – 5
4LS–F3418–00	21 – 7
4LS–F341E–10	21 – 4
5US–F3435–00	21 – 11
5US–F3441–00	21 – 15
5US–F3442–00	21 – 13
5US–F3466–00	21 – 31
36L–F3480–00	21 – 26
5US–F3484–00	21 – 27
5US–F4181–00	23 – 3
5US–F4182–00	23 – 4
5US–F4183–00	23 – 5
5US–F4240–30	23 – 2
5US–F4240–50	23 – 2
5US–F4240–60	23 – 2
5US–F4311–00	23 – 21
5US–F4500–00	23 – 8
4UU–F4512–00	23 – 12
4UU–F4515–00	23 – 10
4UU–F4521–00	23 – 9
4UU–F4523–00	23 – 13
5US–F4524–00	23 – 15
4US–F4534–00	23 – 14
4UU–F4565–00	23 – 11
5US–F470F–00	24 – 2
5US–F471F–00	24 – 4
5US–F4730–00	24 – 1
4LS–F4741–00	24 – 3
5US–F5111–10	25 – 1

INDICE NUMERICO
NUMERICAL INDEX

CODIGO Nº PART NO.	REF. Nº
5US–F5117–10	25 – 2
5US–F5118–00	25 – 9
5US–F5144–00	25 – 17
4UU–F5149–00	25 – 6
5US–F5181–00	25 – 19
5US–F5190–00	25 – 8
5US–F5196–00	25 – 12
5US–F5197–00	25 – 13
5US–F5311–00	27 – 1
5US–F5317–00	27 – 2
5US–F5321–00	27 – 8
36L–F533A–00	27 – 14
5US–F5344–00	27 – 32
5YY–F5351–00	27 – 10
5US–F5355–00	27 – 11
36L–F5364–00	27 – 7
36L–F5366–10	27 – 17
5US–F5371–00	27 – 33
5US–F5376–00	27 – 43
5US–F5377–00	27 – 44
5US–F5381–00	27 – 41
5US–F5387–00	27 – 20
36L–F5388–00	27 – 49
5US–F5395–00	25 – 11
	27 – 26
5US–F5396–00	27 – 27
5US–F5397–00	27 – 28
36L–F5412–00	27 – 24
5YY–F5445–00	27 – 22
5US–F5744–00	26 – 9
5US–F580U–00	26 – 3
5US–F5827–00	26 – 10
5US–F582U–00	26 – 1
5US–F583T–00	29 – 1
4UU–F5846–00	25 – 7
5US–F5872–00	29 – 8
5US–F5875–00	29 – 11
5US–F5886–00	29 – 12
5US–F5977–00	26 – 6
5US–F6111–00	28 – 1
5US–F6240–00	28 – 3
5US–F6241–00	28 – 2
5US–F6242–00	28 – 4
5US–F6279–10	28 – 13
5US–F6280–01	28 – 11
5US–F628J–00	28 – 5
5US–F6290–01	28 – 12
5US–F6311–00	28 – 6

CODIGO Nº PART NO.	REF. Nº
5US–F6331–00	28 – 8
5US–F6335–00	28 – 9
5US–F6372–00	28 – 10
5US–F6393–00	28 – 7
5US–F7111–00	30 – 1
5US–F7112–00	30 – 2
5US–F7114–00	8 – 2
5US–F7204–00	30 – 42
5US–F7211–00	30 – 32
5US–F7231–00	30 – 46
5US–F7247–00	30 – 39
5US–F7262–00	30 – 43
5US–F7285–00	30 – 33
5US–F7311–00	30 – 5
5US–F7411–00	30 – 9
5US–F7413–00	30 – 11
5US–F7421–00	30 – 10
5US–F7423–00	30 – 12
5US–F7431–00	30 – 23
5US–F7432–00	30 – 20
5US–F7433–00	30 – 25
5US–F7437–00	30 – 27
5US–F7441–00	30 – 24
5US–F7442–00	30 – 21
5US–F744G–00	30 – 13
5US–F7452–00	30 – 15
5US–F8100–00	24 – 6
5US–F840F–00	18 – 24
5US–F842M–00	18 – 35
5US–F8457–00	18 – 41
5US–H1400–00	31 – 1
5US–H1410–00	31 – 3
5US–H1450–00	31 – 2
5US–H1800–00	32 – 1
5US–H1801–00	32 – 2
5US–H183G–00	32 – 5
5US–H1940–00	38 – 10
5US–H1950–00	38 – 9
5KA–H1960–00	38 – 7
5US–H2100–10	38 – 1
5US–H2115–00	38 – 2
5US–H2116–00	38 – 3
5US–H2124–00	38 – 4
5US–H2131–00	24 – 7
36L–H2150–V0	38 – 5
36L–H2151–V0	38 – 6
5US–H2310–00	39 – 1
4LS–H2370–00	39 – 3

CODIGO Nº PART NO.	REF. Nº
5US–H2510–10	38 – 12
5US–H2530–00	38 – 16
4LS–H2540–00	39 – 4
5US–H2590–20	38 – 15
5US–H2911–00	37 – 10
5US–H2917–00	37 – 12
5US–H3310–00	33 – 1
36L–H3311–00	33 – 2
	33 – 7
	33 – 15
	33 – 20
5US–H3312–00	33 – 4
	33 – 9
	33 – 17
	33 – 22
5US–H3313–00	33 – 3
	33 – 8
	33 – 16
	33 – 21
5US–H3320–00	33 – 6
5US–H3330–00	33 – 14
5US–H3333–00	33 – 5
	33 – 10
	33 – 18
	33 – 23
5US–H3340–00	33 – 19
5KA–H3350–00	39 – 8
5US–H3365–00	33 – 12
	33 – 25
5US–H3371–10	39 – 9
5US–H3507–00	34 – 2
5US–H3509–00	34 – 6
4LS–H3516–00	35 – 3
5US–H3517–00	34 – 3
5US–H3518–00	34 – 4
5US–H3519–00	34 – 5
5US–H3523–00	34 – 7
5US–H3524–00	34 – 8
5US–H3550–10	34 – 10
5US–H3570–00	34 – 1
5US–H3912–00	37 – 11
5US–H3922–10	37 – 17
36L–H3929–V0	37 – 16
36L–H3936–00	18 – 45
	37 – 20
4TL–H3941–00	37 – 6
5US–H3973–00	37 – 5
5US–H3975–30	37 – 3

CODIGO Nº PART NO.	REF. Nº
5US–H3980–00	38 – 14
5US–H4124–00	35 – 9
5US–H4130–00	35 – 10
5US–H4145–00	35 – 15
5US–H4163–00	35 – 14
5US–H4164–00	35 – 13
5US–H4300–00	35 – 1
36L–H4314–00	35 – 2
5US–H4315–00	35 – 6
5US–H4321–00	35 – 4
5US–H4331–00	35 – 7
5US–H4334–00	35 – 8
5US–H4340–00	35 – 11
5US–H4350–00	35 – 12
5US–H4395–00	35 – 5
5US–H4700–00	36 – 1
36L–H4714–10	36 – 2
5US–H4721–00	36 – 3
5US–H4723–00	36 – 5
5US–H4743–00	36 – 4
5US–H4751–00	36 – 9
5US–H5110–00	18 – 46
5US–H5540–00	39 – 6
5US–H5546–10	39 – 7
5US–W0016–00	26 – 11
5US–W0041–00	29 – 2
5US–W0045–00	26 – 8
5US–W0047–00	26 – 5
5US–W0048–00	26 – 7
5US–W0053–00	26 – 12
5US–W0057–00	26 – 4
5YY–WE512–31	9 – 2
5US–WF211–01	20 – 1
5US–WF461–00	23 – 19
5YY–WF533–00	27 – 9
4LS–XE812–00	16 – 5
3P4–XF410–30–H9	23 – 1
3P4–XF410–50–P0	23 – 1
3P4–XF410–60–P0	23 – 1
90101–06278	27 – 12
	30 – 44
90101–08590	4 – 6
90101–14800	21 – 9
90105–05800	32 – 6
90105–06812	4 – 11
90105–06818	29 – 7
90105–06855	9 – 11
90105–06856	9 – 10

CODIGO Nº PART NO.	REF. Nº
90105–06858	9 – 9
90105–06868	32 – 7
90105–08006	17 – 12
90105–08809	17 – 5
90105–08894	1 – 8
90105–088A6	17 – 9
90105–10809	30 – 18
90105–10815	26 – 13
90109–06239	16 – 3
90109–06811	37 – 18
90109–06863	37 – 13
90109–08063	27 – 34
90109–08361	27 – 23
90109–08831	27 – 37
90109–10474	30 – 6
90110–06806	31 – 5
90110–06810	4 – 3
90110–06811	31 – 4
90110–06819	26 – 2
90110–06850	1 – 13
90110–08800	21 – 16
90110–08801	21 – 12
90110–08802	12 – 8
90111–08816	18 – 26
	18 – 30
90119–05801	13 – 12
90119–06060	24 – 5
90119–06108	6 – 17
	18 – 6
	18 – 39
90119–06809	20 – 8
90119–06839	19 – 13
90123–08046	37 – 2
90149–06126	15 – 4
90150–06021	10 – 16
	19 – 6
90153–08011	27 – 50
90154–06061	1 – 20
	1 – 25
	10 – 15
90155–06002	5 – 9
90157–06804	23 – 17
90159–06178	18 – 10
	18 – 15
	18 – 21
	18 – 23
90160–05806	18 – 11
	18 – 16

CODIGO Nº PART NO.	REF. Nº
90160–05807	21 – 25
90170–05302	3 – 10
90170–06228	16 – 11
90170–12060	13 – 18
90170–12065	20 – 4
90170–20224	27 – 42
90171–14800	25 – 20
	27 – 45
90176–08804	18 – 27
	18 – 31
90176–10073	20 – 13
90179–06806	30 – 51
90179–08148	37 – 1
90179–08816	27 – 25
90179–12659	13 – 4
90179–12800	11 – 13
90179–22800	19 – 9
90179–25033	21 – 6
90183–05818	18 – 7
	18 – 40
	21 – 24
90185–06802	37 – 19
90185–10804	21 – 14
90201–060A3	35 – 16
90201–06380	36 – 7
	36 – 11
90201–07641	5 – 4
90201–07800	5 – 7
90201–08326	4 – 5
90201–08569	23 – 6
90201–08609	1 – 9
90201–08808	17 – 2
90201–106F2	20 – 12
90201–10815	29 – 10
90201–122H1	2 – 15
	13 – 3
90201–12749	33 – 13
90201–127E1	14 – 7
90201–152L1	16 – 17
	30 – 38
90201–177G4	11 – 9
	14 – 19
90201–202L3	11 – 4
90201–225A4	19 – 11
90201–25290	12 – 6
90202–05807	8 – 9
	23 – 18
90202–06239	1 – 23

INDICE NUMERICO
NUMERICAL INDEX

CODIGO Nº PART NO.	REF. Nº
90202–06239	1 – 27
90202–26142	21 – 8
90206–06090	8 – 8
90208–04029	21 – 29
90208–07052	5 – 5
90209–15800	21 – 10
90209–17285	14 – 3
90209–18208	14 – 15
90215–12815	13 – 17
90249–12008	30 – 50
90252–35802	30 – 29
	30 – 41
	30 – 48
90252–55800	25 – 22
	27 – 46
90269–04003	21 – 30
90280–03017	2 – 14
90282–05001	13 – 2
90338–08163	21 – 17
90340–12097	5 – 10
90340–14814	10 – 8
90340–32808	10 – 10
90387–1500N	25 – 10
90401–10813	29 – 9
90430–06817	4 – 15
90430–10148	39 – 5
90430–12227	5 – 11
90450–44046	6 – 6
90450–45802	6 – 18
90467–09006	23 – 22
90467–10819	6 – 3
90467–11106	6 – 15
90467–13858	9 – 7
90468–12007	27 – 36
90468–26048	11 – 3
90480–13018	1 – 22
	1 – 28
90480–13861	19 – 7
90480–24186	19 – 10
90501–10245	30 – 49
90501–12743	30 – 30
90501–216A6	13 – 11
90502–09024	21 – 28
90506–12001	27 – 16
90506–15001	27 – 15
90506–20223	30 – 36
90506–28146	30 – 8
90506–35517	30 – 4

CODIGO Nº PART NO.	REF. Nº
90508–14857	13 – 22
90508–26667	11 – 6
90508–32837	16 – 6
90560–06201	1 – 21
	1 – 26
91317–05010	23 – 20
91317–06014	28 – 14
	38 – 13
91317–06016	21 – 19
	21 – 21
91317–06020	6 – 5
	8 – 4
9131N–08040	17 – 6
91401–20015	27 – 40
91701–06032	30 – 28
91701–08018	30 – 40
91810–14804	1 – 12
91830–21014	9 – 5
	10 – 1
	10 – 4
92907–06200	37 – 7
92907–08100	27 – 39
92907–08600	17 – 7
92907–12200	20 – 5
92907–14200	25 – 21
	27 – 52
9290N–06200	13 – 15
9290N–06600	30 – 47
93101–10838	10 – 23
93102–12875	16 – 4
93102–12877	13 – 23
93102–20876	14 – 22
93104–22805	27 – 5
93105–45801	25 – 5
93106–22820	25 – 4
93106–26801	27 – 21
93109–20821	11 – 14
93210–14899	10 – 9
93210–19809	10 – 22
93210–25804	32 – 4
93210–30611	6 – 4
93210–328A4	10 – 11
93210–42807	27 – 6
93210–44889	1 – 7
93210–56803	32 – 3
93210–57897	1 – 16
93210–71462	1 – 4
93306–054Y5	27 – 19

CODIGO Nº PART NO.	REF. Nº
93306–201Y4	14 – 8
93306–202Y0	27 – 3
93306–202Y1	27 – 4
93306–202YD	2 – 13
93306–203X2	14 – 9
93306–203X9	14 – 23
93306–204Y6	14 – 21
93306–205X3	2 – 7
93306–252YH	25 – 3
93310–629X4	2 – 3
93410–20809	14 – 4
93410–22039	14 – 16
93420–42801	27 – 18
93430–12821	30 – 3
93450–16812	2 – 10
93501–04805	30 – 31
93503–16807	13 – 19
93602–20800	5 – 6
93604–10011	15 – 3
93608–30839	9 – 4
	16 – 8
93822–15808	14 – 24
94112–16801	27 – 29
94127–18825	25 – 14
94212–16800	27 – 30
94227–18803	25 – 15
94312–16800	27 – 31
94325–18822	25 – 16
94568–C9130	27 – 47
94580–25088	4 – 7
94680–88001	27 – 48
94700–00834	1 – 10
95027–06010	14 – 26
95027–06016	4 – 14
95027–06020	1 – 5
95027–06035	10 – 5
	10 – 19
95027–06045	10 – 6
	10 – 20
95027–06055	10 – 7
95301–05600	34 – 9
95304–12600	33 – 11
	33 – 24
95307–06600	30 – 45
	36 – 12
95307–06700	30 – 35
95307–08700	27 – 51
95307–10700	30 – 7

CODIGO Nº PART NO.	REF. Nº
9530L–06700	16 – 12
9530N–06600	13 – 16
	27 – 13
9530N–08600	27 – 35
9530N–08700	27 – 38
95607–06100	36 – 8
95704–06500	35 – 19
95707–05500	18 – 47
95707–06300	37 – 14
95707–06500	18 – 34
	38 – 11
95707–08500	17 – 14
95707–10500	17 – 11
	30 – 19
95707–12500	2 – 16
95807–06012	21 – 32
	36 – 10
95807–06014	35 – 17
95807–08020	30 – 22
95807–08025	30 – 16
95817–08020	18 – 28
	18 – 32
95817–08090	30 – 17
95817–08120	17 – 13
95817–10080	17 – 10
95824–06045	35 – 18
95827–06012	29 – 13
	39 – 10
95827–06025	18 – 2
95827–08020	8 – 5
97007–08016	23 – 7
9702N–06020	16 – 15
97507–06425	37 – 15
97607–03106	7 – 23
97607–04114	7 – 24
97607–05220	6 – 14
97607–06216	18 – 36
	38 – 8
9770N–40620	36 – 6
98502–06014	14 – 11
98507–03008	23 – 16
98507–06008	37 – 8
98507–06010	10 – 13
98507–06020	30 – 34
98507–06035	37 – 9
98507–06918	37 – 4
9850N–06012	12 – 4
98517–06012	30 – 26

CODIGO Nº PART NO.	REF. Nº
98706–04012	29 – 5
98907–06025	39 – 2
98980–06010	8 – 7
99001–05600	5 – 3
99001–06600	30 – 14
99001–10600	16 – 7
99009–15400	16 – 16
	30 – 37
99009–17400	11 – 10
99009–20500	13 – 24

CODIGO Nº PART NO.	REF. Nº