YAMAHA

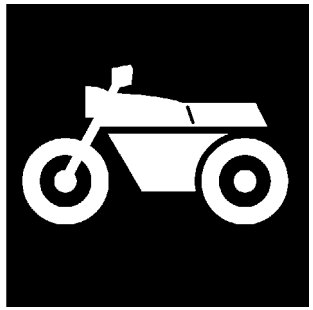

PARTS CATALOGUE

XVZ13CTSY (1D6S) U49
XVZ13CTSYC (1D6T) CALIFORNIA

1H1D6-110EA

( )

YAMAHA
GENUINE
Parts & Accessories

XVZ13CTSY/XVZ13CTSYC
PARTS CATALOGUE
©2008 by Yamaha Motor Co., Ltd.
1st edition, June 2008
All rights reserved.
Any reprinting or unauthorized use
without the written permission of
Yamaha Motor Co., Ltd.
is expressly prohibited.
Printed in Japan.

FOREWORD

This Parts Catalogue is related to the parts for the model(s) on the cover page. When you are ordering replacement parts, please refer to this Parts Catalogue and quote both part numbers and part names correctly.

1. Modifications or additions which have been made after the issue of the Parts Catalogue will be announced in the Parts News.
   It is advisable that you make the necessary corrections to the Parts Catalogue according to the Parts News.

2. Abbreviations
   The following abbreviations are used in this Parts Catalogue.

   “UR” Use specified parts number.
   “UN” Use as many as needed.
   “AP” Alternate Parts
   “LM” Locally Made (Parts need to be ordered locally)
   “F#” Frame No. (Applicable machine No.)
   “O/S” Over Size

3. The number of components for assembly
   - Parts, which are to be supplied in an assembly, are listed with a dot (.) in front of the part name as shown below.
   - The numeral appearing to the right of each component part indicates the quantity of parts for each assembly unit.

PART NO.	DESCRIPTION	Q’TY	REMARKS
2F5–83310–60	FRONT FLASHER LIGHT ASSY	2	
115–83311–60	.BULB (6V–18W)	1	

4. Applicable colours of graphics are represented in the “REMARKS” as shown below.

PART NO.	DESCRIPTION	Q’TY	REMARKS
2N4–24110–00–X5	FUEL TANK COMP.	2	MXR
3J1–24240–10	.GRAPHIC, FUEL TANK	1	FOR MXR

5. Note that the illustrations for reference in finding parts numbers are not to be used for assembling. When assembling, please use the applicable service manual.

6. The asterisk (*) before a reference number indicates modified items after the first edition.

7. Applicable Serial No.

Engine Serial No.

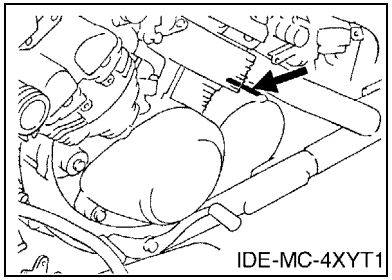

Frame Serial No.

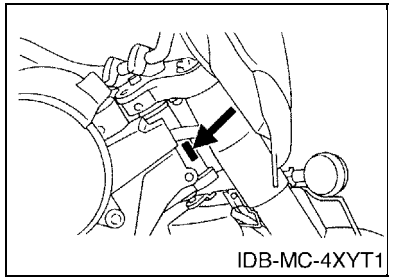

8. Applicable Colour Code (The (*) mark shows Model colour.)

Abbreviation	Colour Name	Colour Code
DBNM8(*)	DARK BLUISH GRAY METALLIC 8	0919
SMX	BLACK METALLIC X	0903
YB	YAMAHA BLACK	0033

MODEL LABEL

(1) A label called “Model Label” is affixed in the location as indicated in (3) below. When using this parts catalogue, please be sure to cross–reference the “model code – production code No.” in the catalogue with the “model code – production code No.” indicated on the Model Label affixed onto the product concerned.

(2) “Model Label” Indication

a b ○ xxxx – xxx ● x c	a: Model Type Code b: Production Code No. c: Colouring Type

○ 4TW1–010 ● A

(3) Model Label Affixing Location

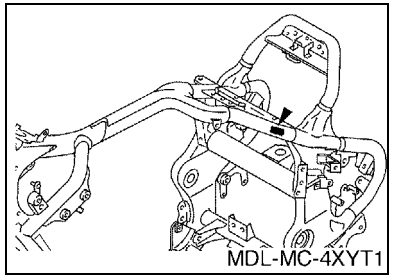

(4) Colouring Information

Model Code	Colouring Type Code	Colour Code	Colour Name	Abbreviation
1D6S	A	0919	DARK BLUISH GRAY METALLIC 8	DBNM8
1D6T	A	0919	DARK BLUISH GRAY METALLIC 8	DBNM8

(5) Model Code – Production Code Number of Model Listed in This Parts Catalogue

Model Code	Production Code No.	Country (destination)	Model Code	Production Code No.	Country (destination)
1D6S	010	U49			
1D6T	010	CALIFORNIA			

CONTENTS

ENGINE

CYLINDER HEAD 1
CRANKSHAFT & PISTON 4
VALVE 6
CAMSHAFT & CHAIN 8
WATER PUMP 9
RADIATOR & HOSE 11
OIL PUMP 13
OIL CLEANER 14
INTAKE 16
AIR INDUCTION SYSTEM 19
CARBURETOR 22
EXHAUST 25
CRANKCASE 27
CRANKCASE COVER 1 29
STARTER CLUTCH 31
CLUTCH 32
TRANSMISSION 34
MIDDLE DRIVE GEAR 35
SHIFT CAM & FORK 37
SHIFT SHAFT 38

CHASSIS

FRAME 40
FENDER 42
SIDE COVER 43
REAR ARM 45
DRIVE SHAFT 46
REAR SUSPENSION 48
STEERING 49
FRONT FORK 50
FUEL TANK 52
SEAT 54
FRONT WHEEL 56
FRONT BRAKE CALIPER 57
REAR WHEEL 58
REAR BRAKE CALIPER 59
STEERING HANDLE & CABLE 60
FRONT MASTER CYLINDER 62
FRONT MASTER CYLINDER 2 64
STAND & FOOTREST 65
REAR MASTER CYLINDER 67
COWLING 1 69
COWLING 2 71
SADDLEBAG 1 73
SADDLEBAG 2 76
GENERATOR 79
STARTING MOTOR 80
FLASHER LIGHT 81
METER 83
HEADLIGHT 84
TAILLIGHT 85
HANDLE SWITCH & LEVER 86
ELECTRICAL 1 87
ELECTRICAL 2 89
ELECTRICAL 3 91

INDEX

NUMERICAL INDEX 92

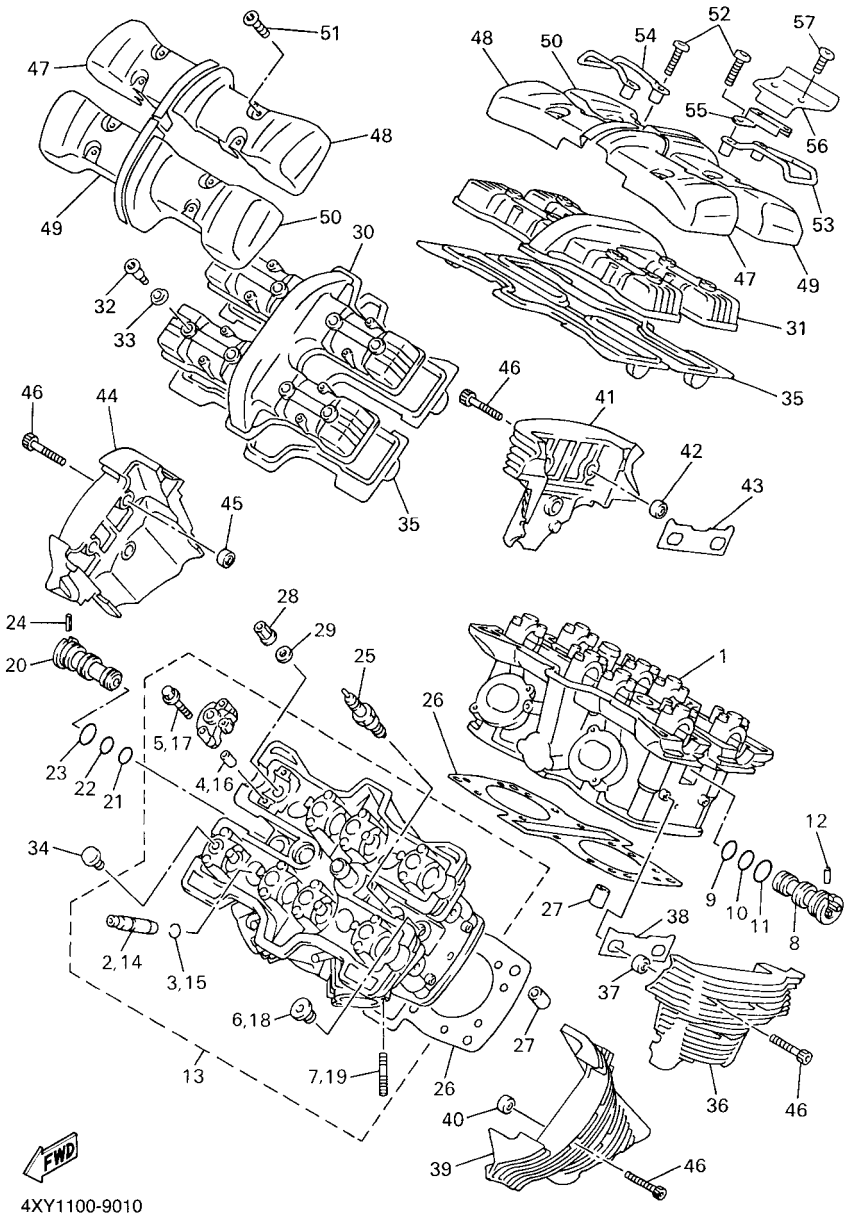

4XY1100-9010

FIG. 1 CYLINDER HEAD

REF. NO.	PART NO.	DESCRIPTION	1D6S	1D6T				REMARKS
1	4XY–11101–41	CYLINDER HEAD ASSY	1	1				
2	26H–11133–00	.GUIDE, VALVE 1	8	8				
3	93440–12117	.CIRCLIP	8	8				
4	91808–16023	.PIN, DOWEL	16	16				
5	90105–06153	.BOLT, FLANGE	16	16				
6	90340–18101	.PLUG, STRAIGHT SCREW	3	3				
7	95617–08620	.BOLT, STUD	4	4				
8	26H–12469–01	JOINT 1	1	1				
9	93210–16629	O-RING	1	1				
10	93210–18322	O-RING	1	1				
11	93210–21631	O-RING	1	1				
12	90254–03008	PIN, SPRING	1	1				
13	4XY–11101–51	CYLINDER HEAD ASSY	1	1				
14	26H–11133–00	.GUIDE, VALVE 1	8	8				
15	93440–12117	.CIRCLIP	8	8				
16	91808–16023	.PIN, DOWEL	16	16				
17	90105–06153	.BOLT, FLANGE	16	16				
18	90340–18101	.PLUG, STRAIGHT SCREW	3	3				
19	95617–08620	.BOLT, STUD	4	4				
20	26H–12469–01	JOINT 1	1	1				
21	93210–16629	O-RING	1	1				
22	93210–18322	O-RING	1	1				
23	93210–21631	O-RING	1	1				
24	90254–03008	PIN, SPRING	1	1				
25	94701–00241	PLUG, SPARK (NGK DPR8EA-9)	4	4				UR
	94701–00242	PLUG, SPARK (ND X24EPR-U9)	4	4				UR
26	1NL–11181–02	GASKET, CYLINDER HEAD 1	2	2				

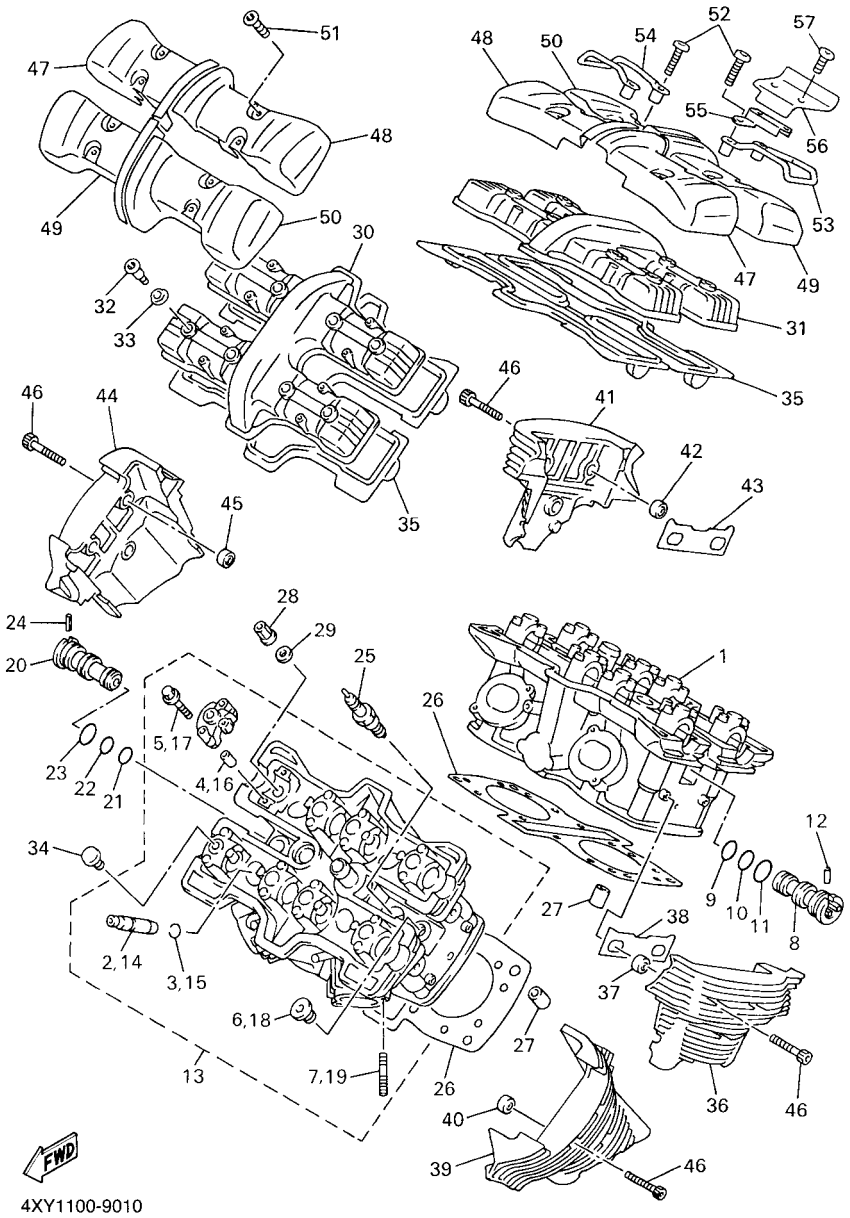

4XY1100-9010

FIG. 1 CYLINDER HEAD

REF. NO.	PART NO.	DESCRIPTION	1D6S	1D6T				REMARKS
27	99530–14016	PIN, DOWEL	4	4				
28	90179–10026	NUT	16	16				
29	90201–102G9	WASHER, PLATE	16	16				
30	4NK–11191–00	COVER, CYLINDER HEAD 1	1	1				
31	4NK–11191–00	COVER, CYLINDER HEAD 1	1	1				
32	90109–066F0	BOLT	16	16				
33	4KG–1111G–00	RUBBER, MOUNT 1	16	16				
34	90338–10150	PLUG	16	16				
35	4NK–11193–00	GASKET, HEAD COVER 1	2	2				
36	4NK–11186–20	COVER, CYLINDER HEAD SIDE 2	1	1				
37	4NK–15316–00	DAMPER 1	3	3				
38	4NK–11195–00	GASKET	1	1				
39	4XY–11187–20	COVER, CYLINDER HEAD SIDE 3	1	1				
40	4NK–15316–00	DAMPER 1	3	3				
41	4NK–11185–20	COVER, CYLINDER HEAD SIDE 1	1	1				
42	4NK–15316–00	DAMPER 1	3	3				
43	4NK–11195–00	GASKET	1	1				
44	4XY–1111H–20	COVER, CYLINDER HEAD SIDE 4	1	1				
45	4NK–15316–00	DAMPER 1	3	3				
46	91314–06020	BOLT, HEXAGON SOCKET HEAD	12	12				
47	4NK–1111M–00	COVER 1	2	2				
48	4NK–1111N–00	COVER 2	2	2				
49	4NK–1111P–00	COVER 3	2	2				
50	4NK–1111R–00	COVER 4	2	2				
51	92014–06014	BOLT, BUTTON HEAD	12	12				
52	92014–06030	BOLT, BUTTON HEAD	4	4				
53	4NK–11152–00	BRACKET, CYLINDER HEAD COVER	1	1				

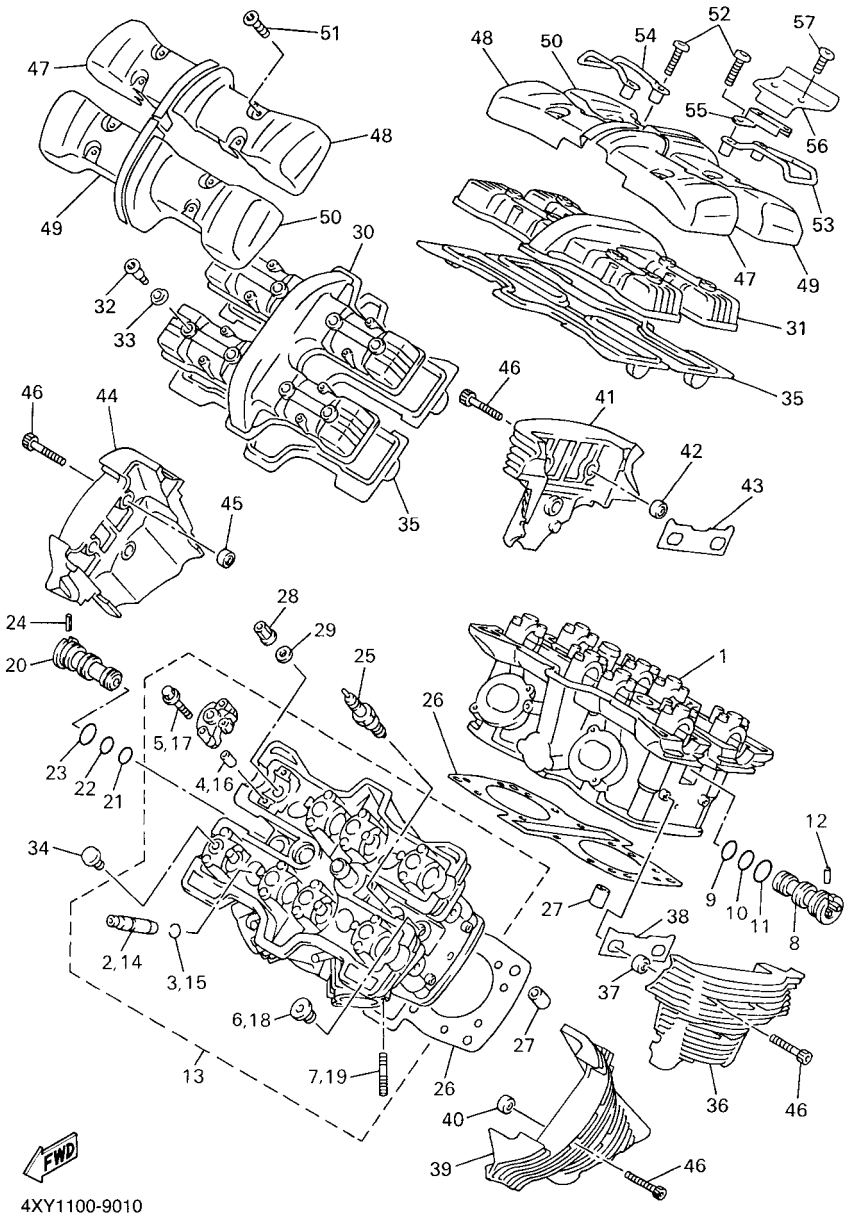

FIG. 1 CYLINDER HEAD

REF. NO.	PART NO.	DESCRIPTION	1D6S	1D6T				REMARKS
54	4NK–11142–00	BRACKET, CYLINDER HEAD COVER 2	1	1				
55	4XY–11152–00	BRACKET, CYLINDER HEAD COVER	1	1				
56	1D6–1118A–00	COVER	1	1				
57	92014–06010	BOLT, BUTTON HEAD	2	2				

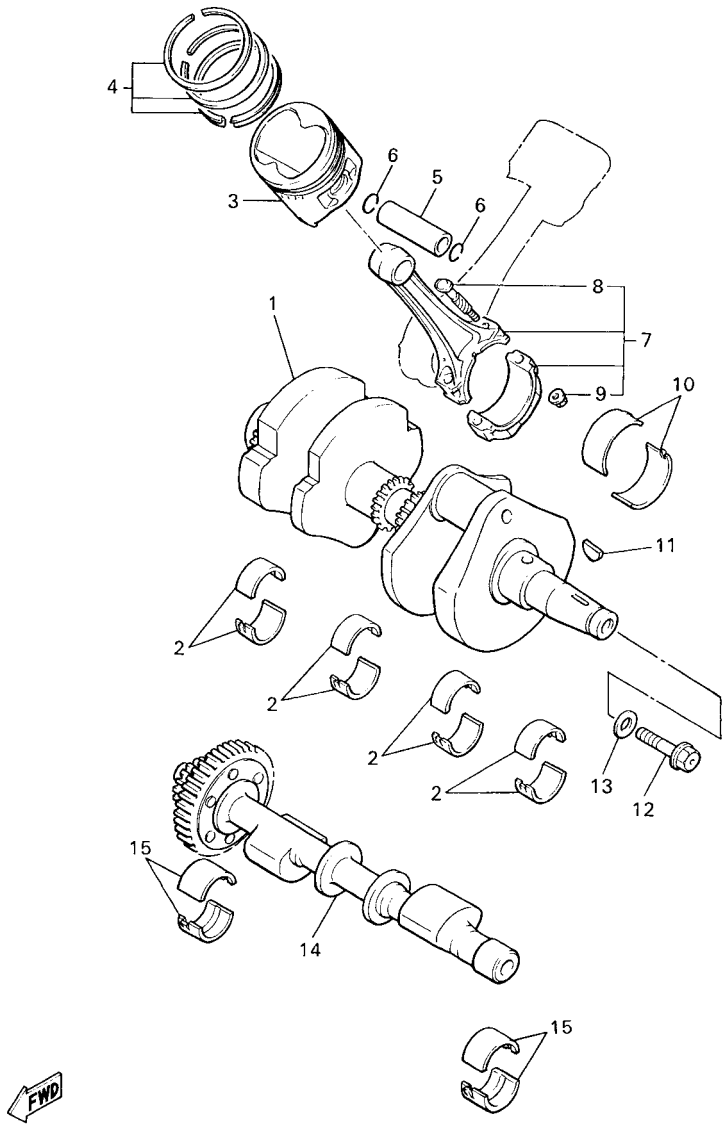

4XY1100-9020

FIG. 2 CRANKSHAFT & PISTON

REF. NO.	PART NO.	DESCRIPTION	1D6S	1D6T				REMARKS
1	4XY–11400–00	CRANKSHAFT ASSY	1	1				
2	1FK–11416–01	PLANE BEARING, CRANKSHAFT 1	8	8				UR BLUE
	1FK–11416–11	PLANE BEARING, CRANKSHAFT 1	8	8				UR BLACK
	1FK–11416–21	PLANE BEARING, CRANKSHAFT 1	8	8				UR BROWN
	1FK–11416–31	PLANE BEARING, CRANKSHAFT 1	8	8				UR GREEN
	1FK–11416–41	PLANE BEARING, CRANKSHAFT 1	8	8				UR YELLOW
	1FK–11416–51	PLANE BEARING, CRANKSHAFT 1	8	8				UR PINK
	1FK–11416–61	PLANE BEARING, CRANKSHAFT 1	8	8				UR RED
3	4XY–11631–00–A0	PISTON (STD)	4	4				
	4XY–11635–00	PISTON (0.25MM O/S)	4	4				AP
	4XY–11636–00	PISTON (0.50MM O/S)	4	4				AP
4	1NL–11610–00	PISTON RING SET (STD)	4	4				
	1NL–11610–10	PISTON RING SET (0.25MM O/S)	4	4				AP
	1NL–11610–20	PISTON RING SET (0.50MM O/S)	4	4				AP
5	1FK–11633–00	PIN, PISTON	4	4				
6	93450–19095	CIRCLIP	8	8				
7	26H–11650–00	CONNECTING ROD ASSY	4	4				
8	26H–11654–00	.BOLT, CONNECTING ROD	2	2				
9	90179–08327	.NUT	2	2				
10	1FK–11656–00	PLANE BEARING, CONNECTING ROD	8	8				UR BLUE
	1FK–11656–10	PLANE BEARING, CONNECTING ROD	8	8				UR BLACK
	1FK–11656–20	PLANE BEARING, CONNECTING ROD	8	8				UR BROWN
	1FK–11656–30	PLANE BEARING, CONNECTING ROD	8	8				UR GREEN
	1FK–11656–40	PLANE BEARING, CONNECTING ROD	8	8				UR YELLOW
	1FK–11656–50	PLANE BEARING, CONNECTING ROD	8	8				UR PINK
11	90280–05029	KEY, WOODRUFF	1	1				
12	90105–12005	BOLT, FLANGE	1	1				

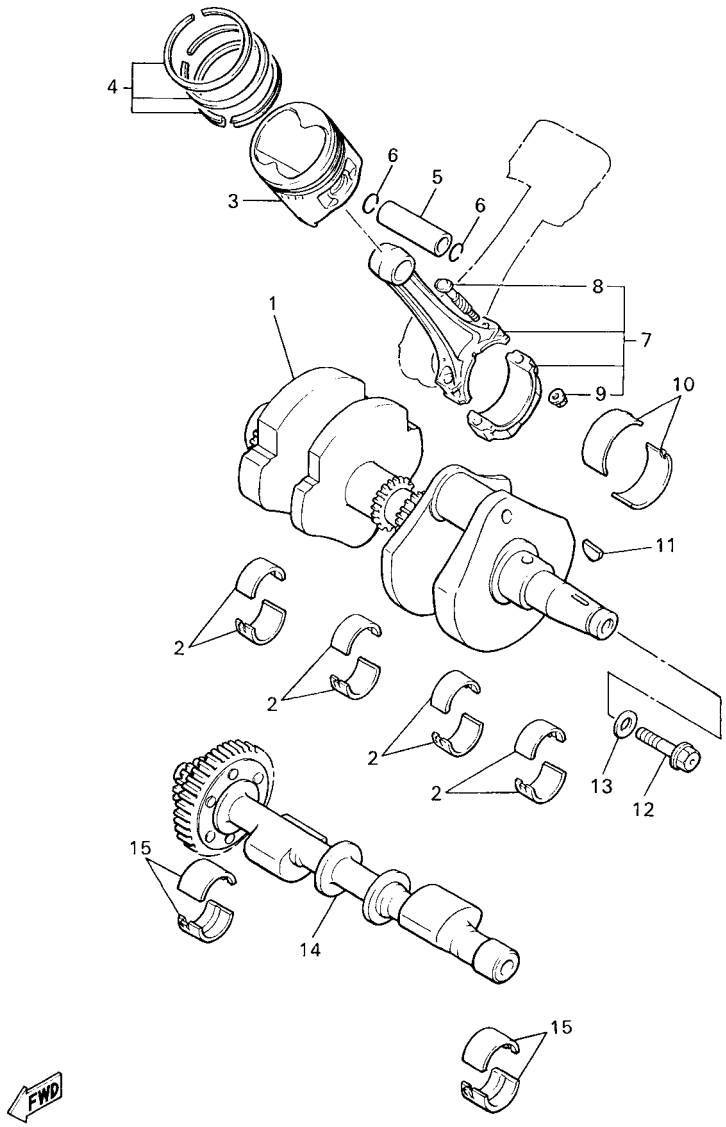

4XY1100-9020

FIG. 2 CRANKSHAFT & PISTON

REF. NO.	PART NO.	DESCRIPTION	1D6S	1D6T				REMARKS
13	90201–121H0	WASHER, PLATE	1	1				
14	1FK–11500–10	BALANCER ASSY	1	1				
15	26H–11413–02	PLANE BEARING, BALANCE WEIGHT	4	4				UR BLUE
	26H–11413–12	PLANE BEARING, BALANCE WEIGHT	4	4				UR BLACK
	26H–11413–22	PLANE BEARING, BALANCE WEIGHT	4	4				UR BROWN
	26H–11413–32	PLANE BEARING, BALANCE WEIGHT	4	4				UR GREEN
	26H–11413–42	PLANE BEARING, BALANCE WEIGHT	4	4				UR YELLOW
	26H–11413–52	PLANE BEARING, BALANCE WEIGHT	4	4				UR PINK
	26H–11413–62	PLANE BEARING, BALANCE WEIGHT	4	4				UR RED

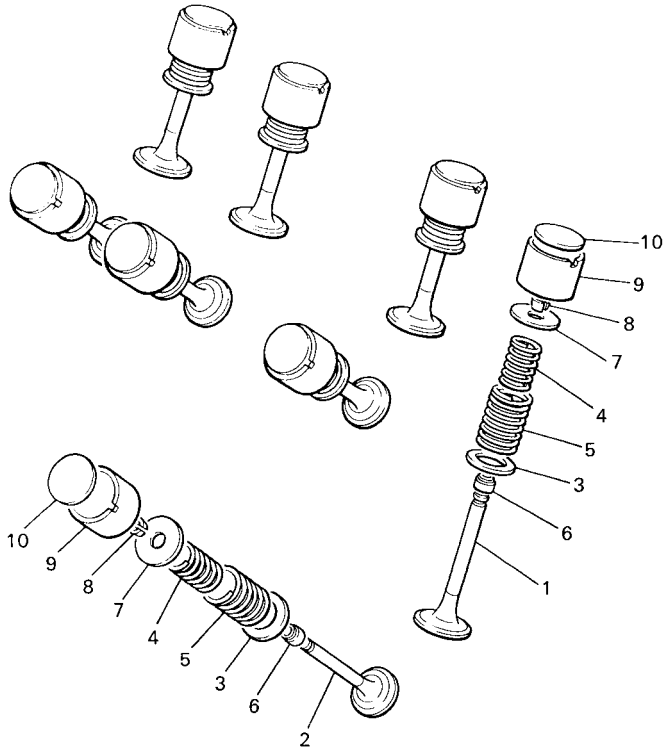

4XY1100-9030

FIG. 3 VALVE

REF. NO.	PART NO.	DESCRIPTION	1D6S	1D6T				REMARKS
1	26H–12111–11	VALVE, INTAKE	8	8				
2	26H–12121–11	VALVE, EXHAUST	8	8				
3	26H–12116–00	SEAT, VALVE SPRING	16	16				
4	26H–12113–00	SPRING, VALVE INNER	16	16				
5	26H–12114–00	SPRING, VALVE OUTER	16	16				
6	4KM–12119–00	SEAL, VALVE STEM	16	16				
7	26H–12117–00	RETAINER, VALVE SPRING	16	16				
8	4G0–12118–00	COTTER, VALVE	32	32				
9	26H–12153–01	LIFTER, VALVE	16	16				WHITE
	26H–12153–09	LIFTER, VALVE(O/S)	16	16				AP GREEN
10	26H–12168–00	PAD, ADJUSTING (2.00)	16	16				UR
	26H–12168–20	PAD, ADJUSTING (2.05)	16	16				UR
	26H–12168–40	PAD, ADJUSTING (2.10)	16	16				UR
	26H–12168–60	PAD, ADJUSTING (2.15)	16	16				UR
	26H–12168–80	PAD, ADJUSTING (2.20)	16	16				UR
	26H–12168–A0	PAD, ADJUSTING (2.25)	16	16				UR
	26H–12168–F0	PAD, ADJUSTING (2.30)	16	16				UR
	26H–12168–H0	PAD, ADJUSTING (2.35)	16	16				UR
	26H–12168–K0	PAD, ADJUSTING (2.40)	16	16				UR
	26H–12168–M0	PAD, ADJUSTING (2.45)	16	16				UR
	26H–12168–R0	PAD, ADJUSTING (2.50)	16	16				UR
	26H–12168–U0	PAD, ADJUSTING (2.55)	16	16				UR
	26H–12168–W0	PAD, ADJUSTING (2.60)	16	16				UR
	26H–12168–Y0	PAD, ADJUSTING (2.65)	16	16				UR
	26H–12169–10	PAD, ADJUSTING (2.70)	16	16				UR
	26H–12169–30	PAD, ADJUSTING (2.75)	16	16				UR
	26H–12169–50	PAD, ADJUSTING (2.80)	16	16				UR

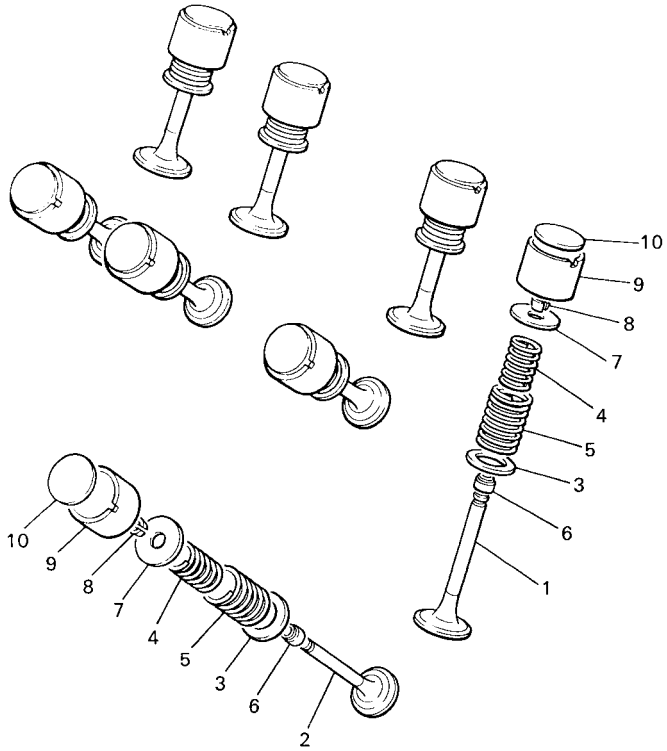

4XY1100-9030

FIG. 3 VALVE

REF. NO.	PART NO.	DESCRIPTION	1D6S	1D6T				REMARKS
10	26H–12169–70	PAD, ADJUSTING (2.85)	16	16				UR
	26H–12169–90	PAD, ADJUSTING (2.90)	16	16				UR
	26H–12169–E0	PAD, ADJUSTING (2.95)	16	16				UR
	26H–12169–G0	PAD, ADJUSTING (3.00)	16	16				UR
	26H–12169–J0	PAD, ADJUSTING (3.05)	16	16				UR
	26H–12169–L0	PAD, ADJUSTING (3.10)	16	16				UR
	26H–12169–N0	PAD, ADJUSTING (3.15)	16	16				UR
	26H–12169–T0	PAD, ADJUSTING (3.20)	16	16				UR

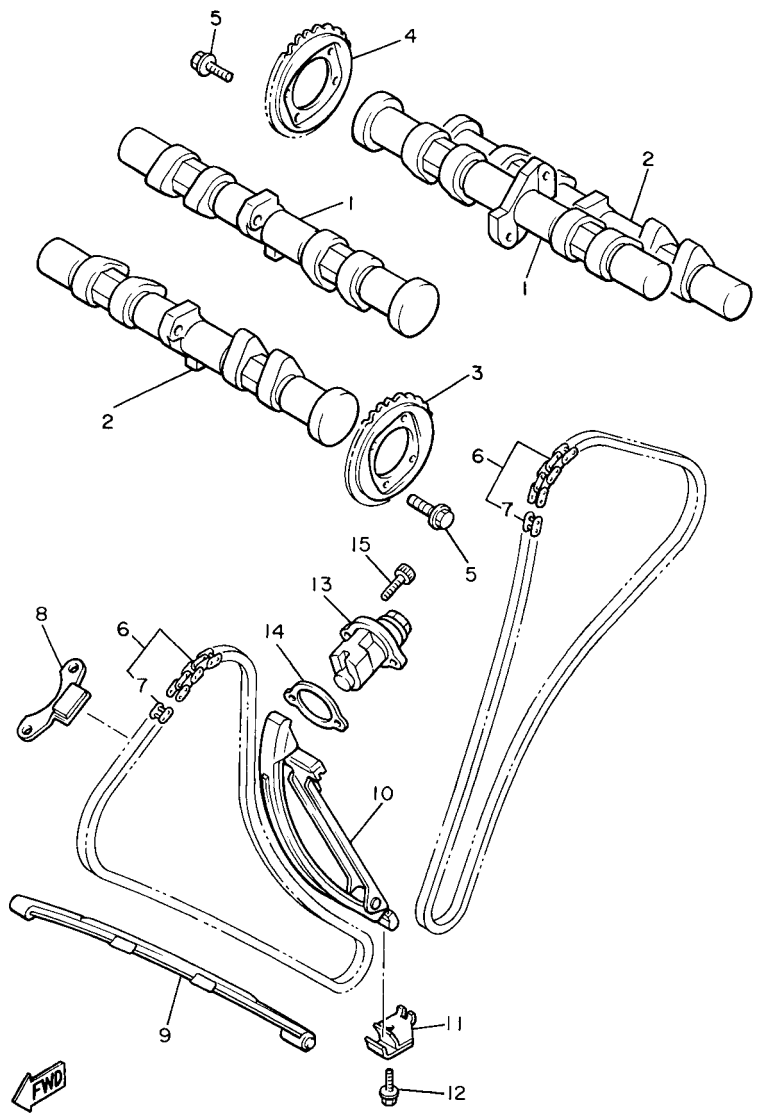

FIG. 4 CAMSHAFT & CHAIN

REF. NO.	PART NO.	DESCRIPTION	1D6S	1D6T				REMARKS
1	4XY–12171–00	CAMSHAFT 1	2	2				
2	4XY–12181–00	CAMSHAFT 2	2	2				
3	4XY–12177–00	SPROCKET, CAM CHAIN	2	2				
4	4XY–12176–00	SPROCKET, CAM CHAIN	2	2				
5	90105–07004	BOLT, FLANGE	8	8				
6	94590–44118	CHAIN (BF05M-118L)	2	2				
7	94600–02001	.JOINT, CHAIN (BF05M)	1	1				TSUBAKIMOTO
8	26H–12241–00	GUIDE, STOPPER 2	2	2				
9	26H–12251–00	DAMPER, CHAIN 1	2	2				
10	26H–12252–00	DAMPER, CHAIN 2	2	2				
11	26H–12233–00	PLATE, GUIDE STOPPER 1	1	1				
12	95817–08025	BOLT, FLANGE	1	1				
13	26H–12210–03	TENSIONER ASSY, CAM CHAIN	2	2				
14	3JP–12213–01	GASKET, TENSIONER CASE	2	2				
15	91317–06020	BOLT	4	4				

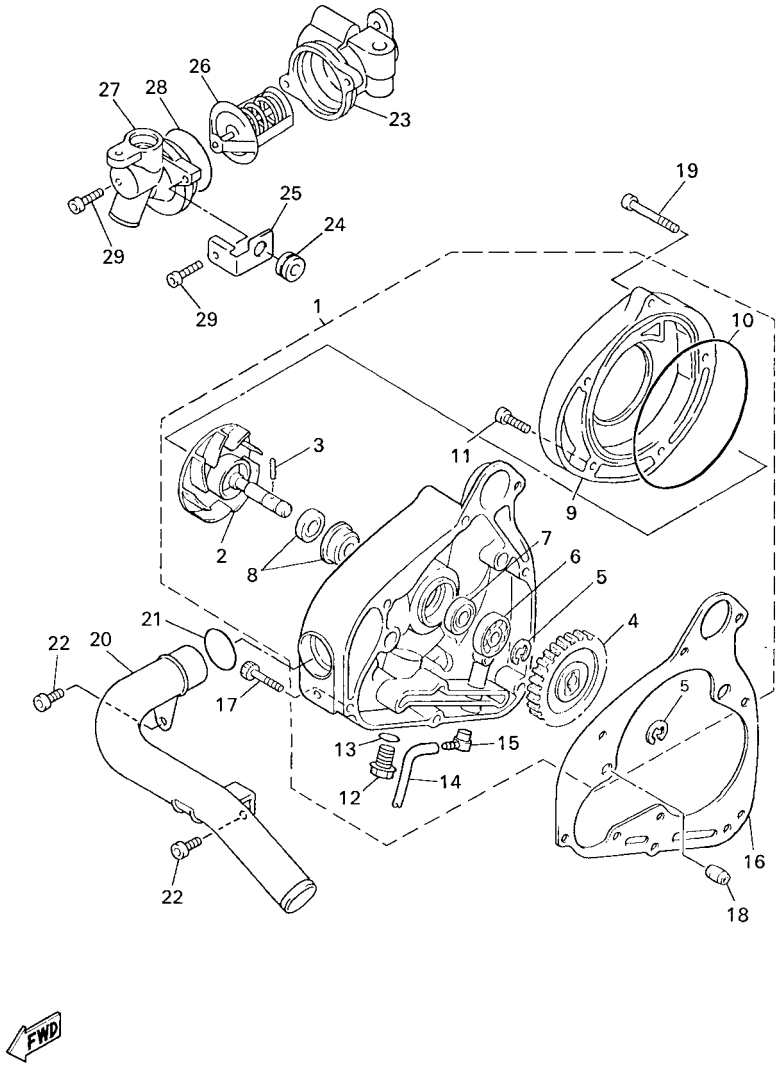

FIG. 5 WATER PUMP

REF. NO.	PART NO.	DESCRIPTION	1D6S	1D6T				REMARKS
1	4NK–12420–03	WATER PUMP ASSY	1	1				
2	1FK–12450–00	.IMPELLER SHAFT ASSY	1	1				
3	93603–14026	.PIN, DOWEL	1	1				
4	26H–12459–00	.GEAR, IMPELLER SHAFT (31T)	1	1				
5	99009–10400	.CIRCLIP	2	2				
6	93306–00006	.BEARING	1	1				
7	93101–10090	.OIL SEAL	1	1				
8	11H–12438–10	.SEAL, MECHANICAL	1	1				
9	4NK–W1241–02	.COVER, HOUSING	1	1				
10	93211–16591	.O-RING	1	1				
11	91314–06030	.BOLT, HEXAGON SOCKET HEAD	2	2				
12	90340–14132	.PLUG, STRAIGHT SCREW	1	1				
13	214–11198–01	.GASKET	1	1				
14	90445–05278	.HOSE (L200)	1	1				
15	353–13552–01	.NOZZLE	1	1				
16	4NK–12449–00	GASKET, WATER PUMP	1	1				
17	91314–06025	BOLT, HEXAGON SOCKET HEAD	4	4				
18	99530–10114	PIN, DOWEL	2	2				
19	91314–06080	BOLT, HEXAGON SOCKET HEAD	3	3				
20	4XY–12483–00	PIPE 3	1	1				
21	93210–23787	O-RING	1	1				
22	91314–06014	BOLT, HEXAGON SOCKET HEAD	2	2				
23	4XY–12417–00	HOUSING, THERMOSTAT	1	1				
24	90480–10517	GROMMET	1	1				
25	4XY–1244E–00	BRACKET 1	1	1				
26	1AE–12410–00	THERMOSTAT ASSY	1	1				
27	4XY–12413–00	COVER, THERMOSTAT	1	1				

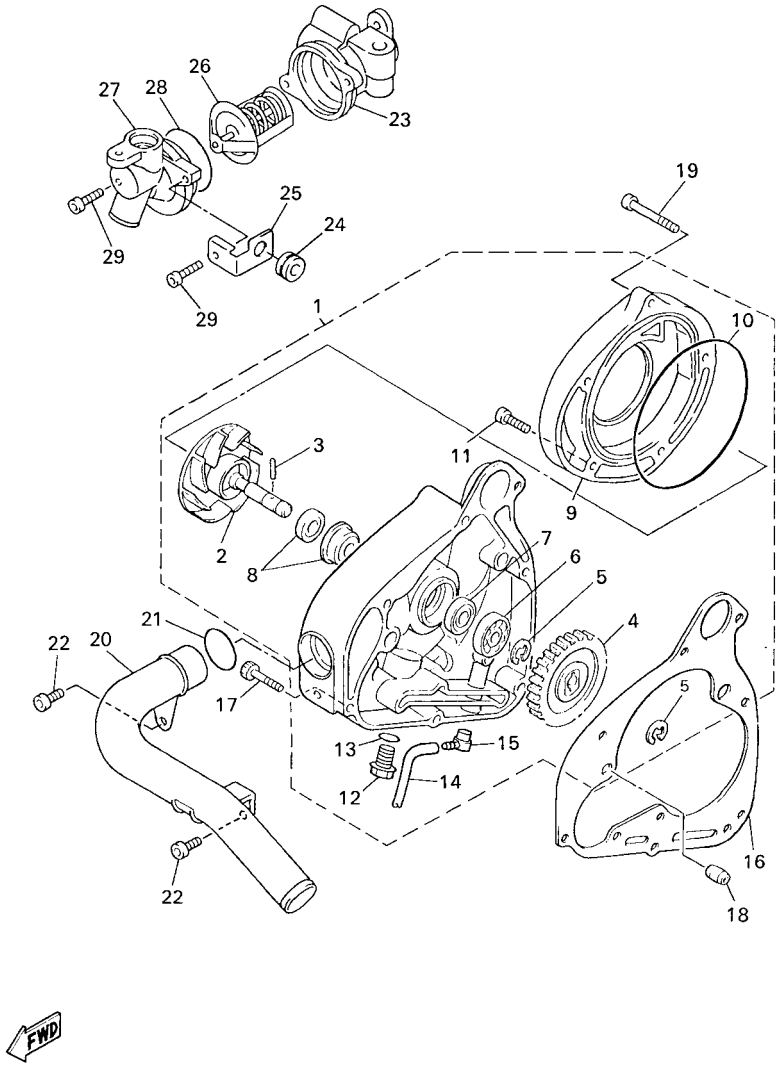

FIG. 5 WATER PUMP

REF. NO.	PART NO.	DESCRIPTION	1D6S	1D6T				REMARKS
28	93210–49046	O-RING	1	1				
29	91317–06020	BOLT	2	2				

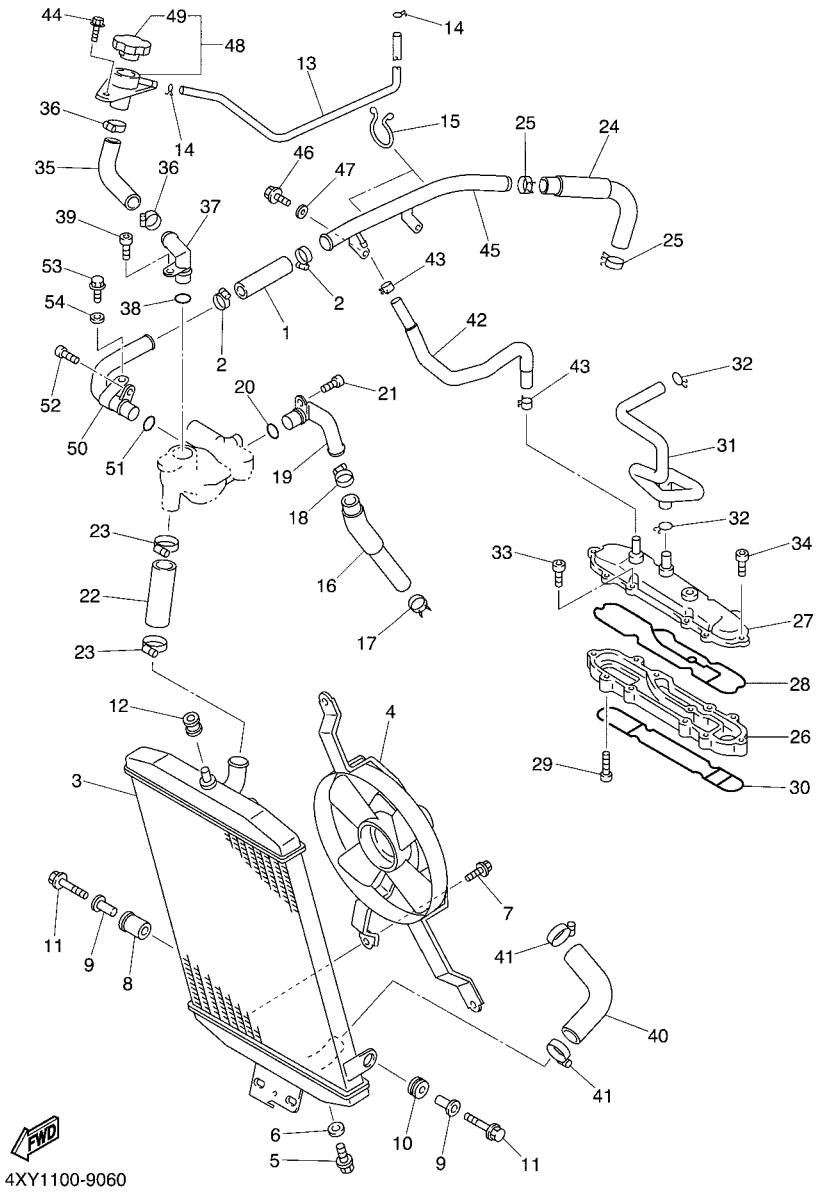

4XY1100-9060

FIG. 6 RADIATOR & HOSE

REF. NO.	PART NO.	DESCRIPTION	1D6S	1D6T				REMARKS
1	4XY–12578–00	HOSE 3	1	1				
2	90450–28014	HOSE CLAMP ASSY	2	2				
3	4XY–12461–00	RADIATOR ASSY	1	1				
4	1D6–12405–00	BLOWER ASSY	1	1				
5	1AA–12561–00	PLUG,DRAIN COCK	1	1				
6	1AA–12435–00	GASKET	1	1				
7	90119–06044	BOLT, WITH WASHER	3	3				
8	4XY–12465–00	DAMPER, RADIATOR	1	1				
9	90387–0614X	COLLAR	2	2				
10	90480–19283	GROMMET	1	1				
11	95827–06045	BOLT, FLANGE	2	2				
12	90480–16284	GROMMET	1	1				
13	90445–09123	HOSE (L730)	1	1				
14	90467–08003	CLIP	2	2				
15	90464–25267	CLAMP	2	2				
16	4XY–12576–00	HOSE 1	1	1				
17	90467–23109	CLIP	1	1				
18	90450–28014	HOSE CLAMP ASSY	1	1				
19	4XY–12485–00	PIPE 5	1	1				
20	93210–18417	O-RING	1	1				
21	91317–06012	BOLT	1	1				
22	4XY–12579–00	HOSE 4	1	1				
23	90450–38040	HOSE CLAMP ASSY	2	2				
24	4XY–12577–00	HOSE 2	1	1				
25	90467–23109	CLIP	2	2				
26	1FK–1246A–10	COVER 1	1	1				
27	26H–1246E–20	COVER 2	1	1				

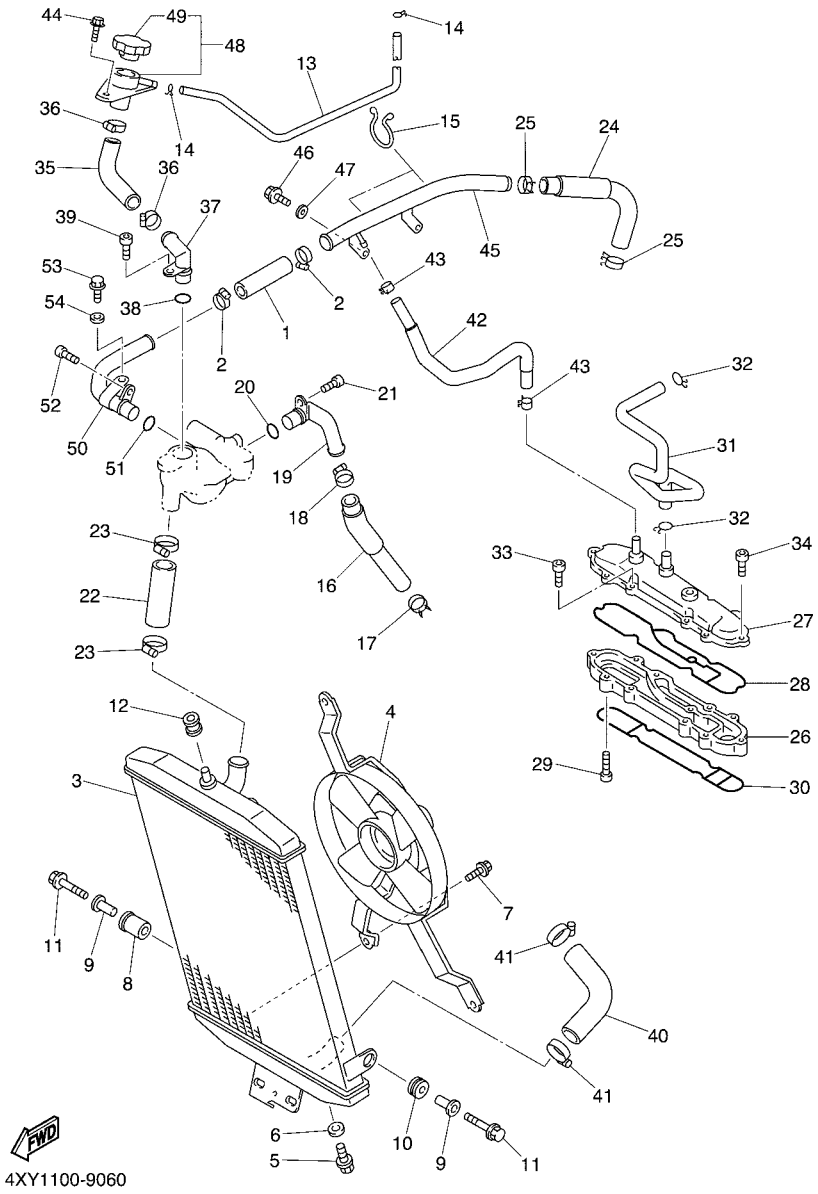

FIG. 6 RADIATOR & HOSE

REF. NO.	PART NO.	DESCRIPTION	1D6S	1D6T				REMARKS
28	26H–12428–00	GASKET, HOUSING COVER 2	1	1				
29	91314–06016	BOLT, HEXAGON SOCKET HEAD	4	4				
30	26H–12427–00	GASKET, HOUSING COVER 1	1	1				
31	4XY–11166–00	PIPE, BREATHER 1	1	1				
32	90467–14015	CLIP	2	2				
33	90110–06023	BOLT, HEXAGON SOCKET HEAD	4	4				
34	91314–06040	BOLT, HEXAGON SOCKET HEAD	2	2				
35	4XY–12589–00	HOSE 6	1	1				
36	90450–28014	HOSE CLAMP ASSY	2	2				
37	4XY–12484–00	PIPE 4	1	1				
38	93210–18417	O-RING	1	1				
39	91317–06012	BOLT	1	1				
40	4XY–12588–00	HOSE 5	1	1				
41	90450–38040	HOSE CLAMP ASSY	2	2				
42	4XY–12551–00	HOSE 7	1	1				
43	90467–11090	CLIP	2	2				
44	95827–06012	BOLT, FLANGE	2	2				
45	4XY–12481–00	PIPE 1	1	1				
46	97027–05010	BOLT, HEXAGON	2	2				
47	92907–05600	WASHER, PLATE	2	2				
48	4NK–12590–00	CONDUCTION ASSY	1	1				
49	3XP–12462–00	.CAP, RADIATOR	1	1				
50	4XY–12482–00	PIPE 2	1	1				
51	93210–18417	O-RING	1	1				
52	91317–06012	BOLT	1	1				
53	95027–06012	BOLT, FLANGE	1	1				
54	92907–06600	WASHER, PLATE	1	1				

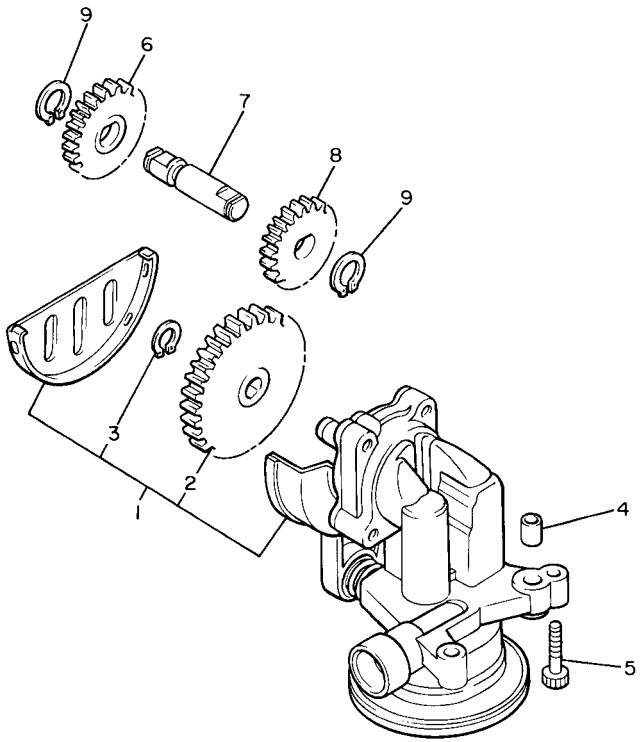

26H110-3070

FIG. 7 OIL PUMP

REF. NO.	PART NO.	DESCRIPTION	1D6S	1D6T				REMARKS
1	26H–13300–02	OIL PUMP ASSY	1	1				
2	26H–13325–00	.GEAR, PUMP DRIVEN (28T)	1	1				
3	99009–11400	.CIRCLIP	1	1				
4	99530–10114	PIN, DOWEL	2	2				
5	91317–06025	BOLT	3	3				
6	26H–13351–01	GEAR, PUMP IDLE 1 (16T)	1	1				
7	26H–13342–00	SHAFT, IDLE GEAR	1	1				
8	26H–13361–00	GEAR, PUMP IDLE 2 (15T)	1	1				
9	99009–12400	CIRCLIP	2	2				

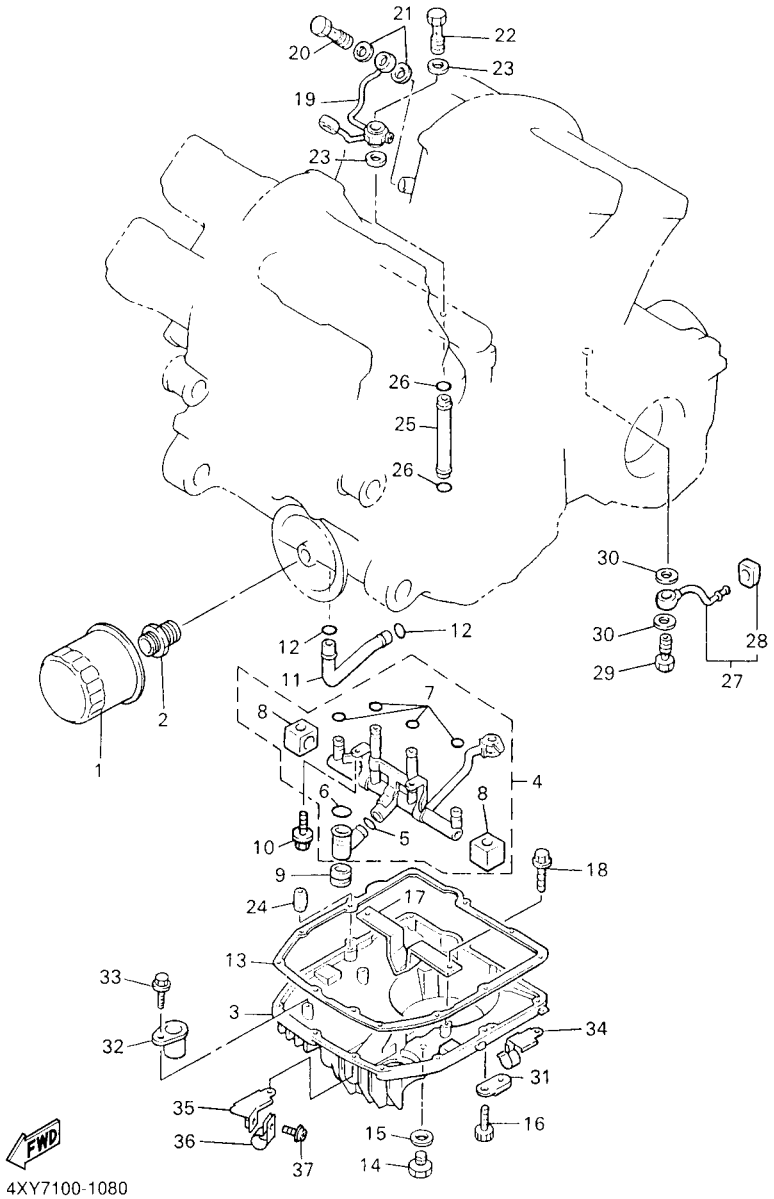

FIG. 8 OIL CLEANER

REF. NO.	PART NO.	DESCRIPTION	1D6S	1D6T				REMARKS
1	5GH–13440–00	ELEMENT ASSY, OIL CLEANER	1	1				
2	90401–20145	BOLT, UNION	1	1				
3	26H–13417–01	COVER, STRAINER	1	1				
4	26H–Y1319–10	DELIVERY PIPE ASS'Y	1	1				
5	93210–13361	.O-RING	1	1				
6	93210–14637	.O-RING	1	1				
7	93210–06667	.O-RING	4	4				
8	26H–15365–00	.GROMMET	2	2				
9	26H–15366–01	GROMMET	1	1				
10	95817–06012	BOLT, FLANGE	2	2				
11	26H–13161–00	PIPE, DELIVERY 1	1	1				
12	93210–14579	O-RING	2	2				
13	3JP–13414–01	GASKET, STRAINER COVER	1	1				
14	90340–14132	PLUG, STRAIGHT SCREW	1	1				
15	214–11198–01	GASKET	1	1				
16	91317–06030	BOLT	12	12				
17	26H–13337–01	PLATE, BAFFLE LOWER	1	1				
18	95817–06012	BOLT, FLANGE	2	2				
19	26H–13181–03	PIPE, DELIVERY 3	1	1				
20	90401–08038	BOLT, UNION	2	2				
21	90430–08119	GASKET	4	4				
22	90401–10108	BOLT, UNION	1	1				
23	90201–10128	WASHER, PLATE	2	2				
24	99530–08016	PIN, DOWEL	2	2				
25	26H–13171–00	PIPE, DELIVERY 2	1	1				
26	93210–06667	O-RING	2	2				
27	26H–13416–01	PIPE, OIL 1	1	1				

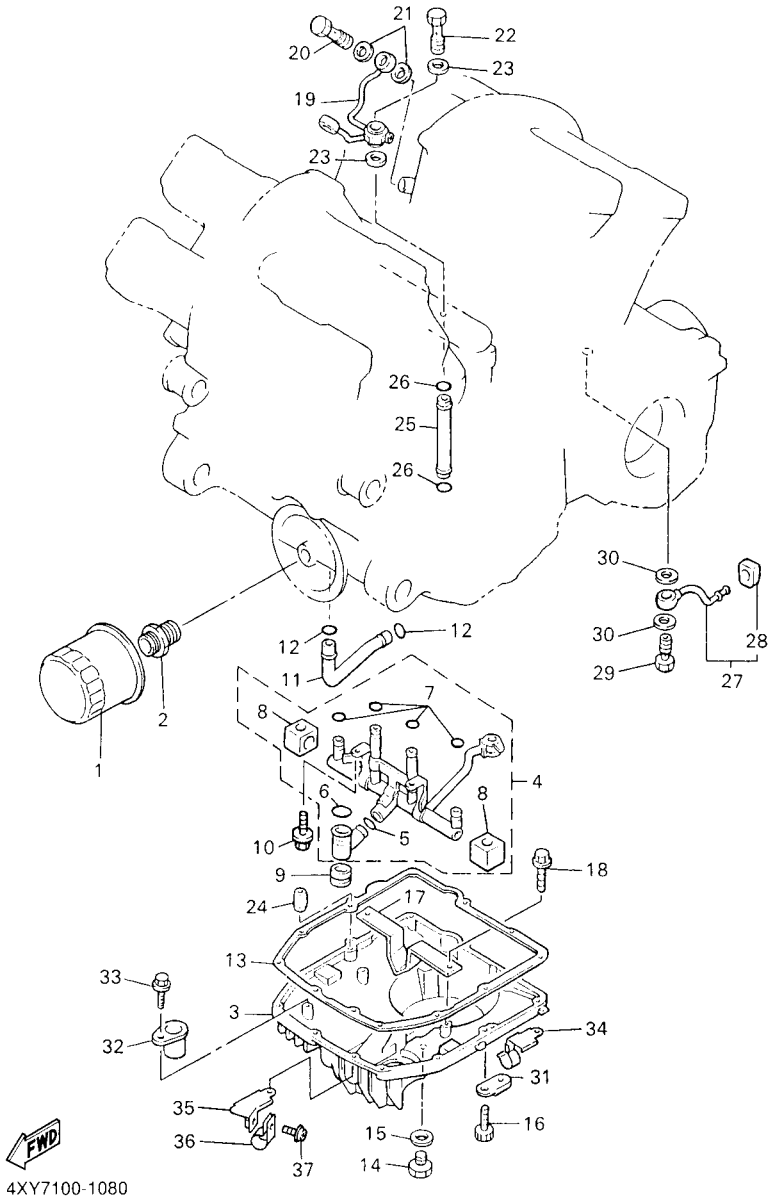

FIG. 8 OIL CLEANER

REF. NO.	PART NO.	DESCRIPTION	1D6S	1D6T				REMARKS
28	26H–13476–00	.GASKET	1	1				
29	90401–08093	BOLT, UNION	1	1				
30	90430–08119	GASKET	2	2				
31	90465–08193	CLAMP	1	1				
32	1FK–13151–00	STAY	1	1				
33	95817–06012	BOLT, FLANGE	1	1				
34	90462–10226	CLAMP	1	1				
35	4NK–13782–00	STAY	1	1				
36	90461–15100	CLAMP	1	1				
37	90159–05155	SCREW, WITH WASHER	1	1				

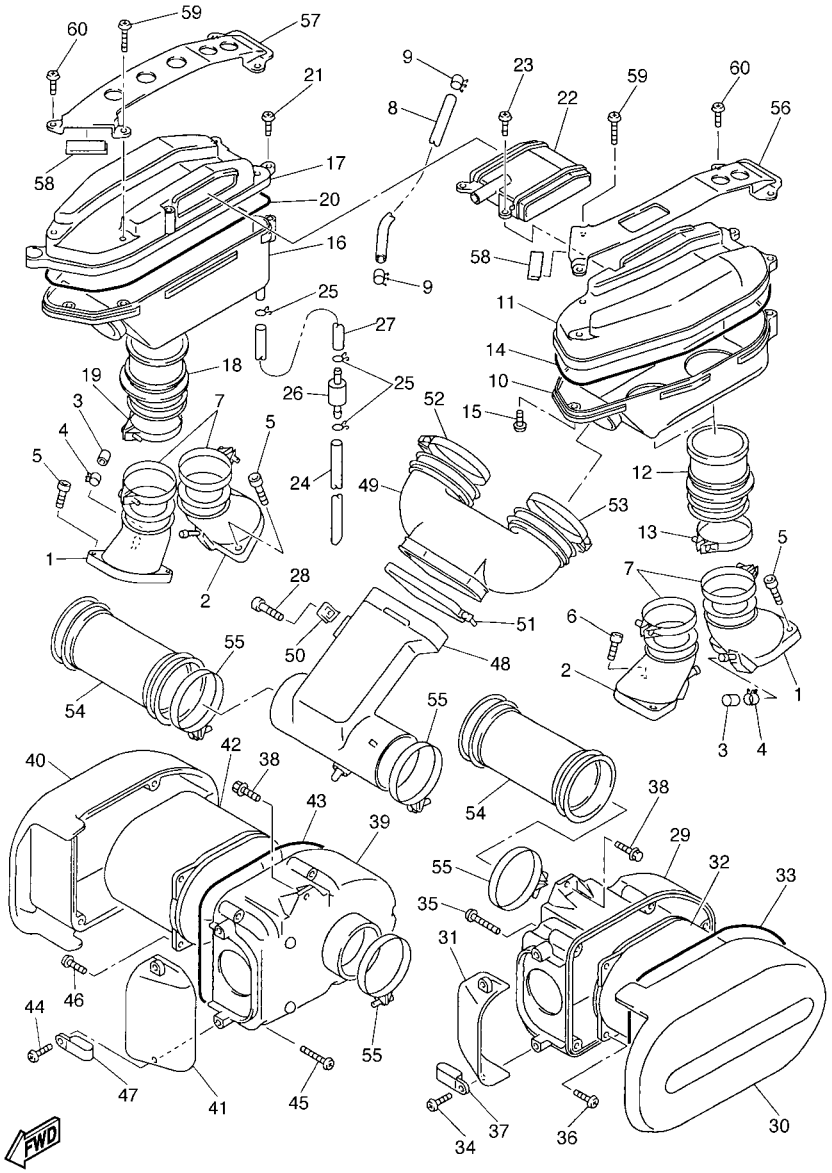

1D61100-D090

FIG. 9 INTAKE

REF. NO.	PART NO.	DESCRIPTION	1D6S	1D6T				REMARKS
1	4XY–13586–10	JOINT, CARBURETOR 1	2	2				
2	4XY–13596–10	JOINT, CARBURETOR 2	2	2				
3	16G–13569–00	PLUG, BLIND	2	2				
4	90467–10039	CLIP	2	2				
5	91317–06020	BOLT	6	6				
6	90110–06113	BOLT, HEXAGON SOCKET HEAD	2	2				
7	4XY–13575–00	BAND	4	4				
8	4XY–13971–10	PIPE, FUEL 1	1	1				
9	90467–13123	CLIP	2	2				
10	4XY–14411–00	CASE, AIR CLEANER 1	1	1				
11	4XY–14417–01	COVER 1	1	1				
12	4XY–14453–00	JOINT, AIR CLEANER 1	2	2				
13	90460–58204	CLAMP, HOSE	2	2				
14	4XY–14457–00	SEAL	1	1				
15	97707–50120	SCREW, TAPPING	2	2				
16	4XY–14421–00	CASE, AIR CLEANER 2	1	1				
17	4XY–14418–01	COVER 2	1	1				
18	4XY–14453–00	JOINT, AIR CLEANER 1	2	2				
19	90460–58204	CLAMP, HOSE	2	2				
20	4XY–14457–00	SEAL	1	1				
21	97707–50120	SCREW, TAPPING	2	2				
22	4XY–14485–00	PIPE, JOINT	1	1				
23	97707–50116	SCREW, TAPPING	2	2				
24	90445–115J9	HOSE (L340)	2	2				
25	90467–11106	CLIP	6	6				
26	4X7–2149Y–00	FILTER ASSY	2	2				
27	2UJ–14419–00	PIPE	2	2				

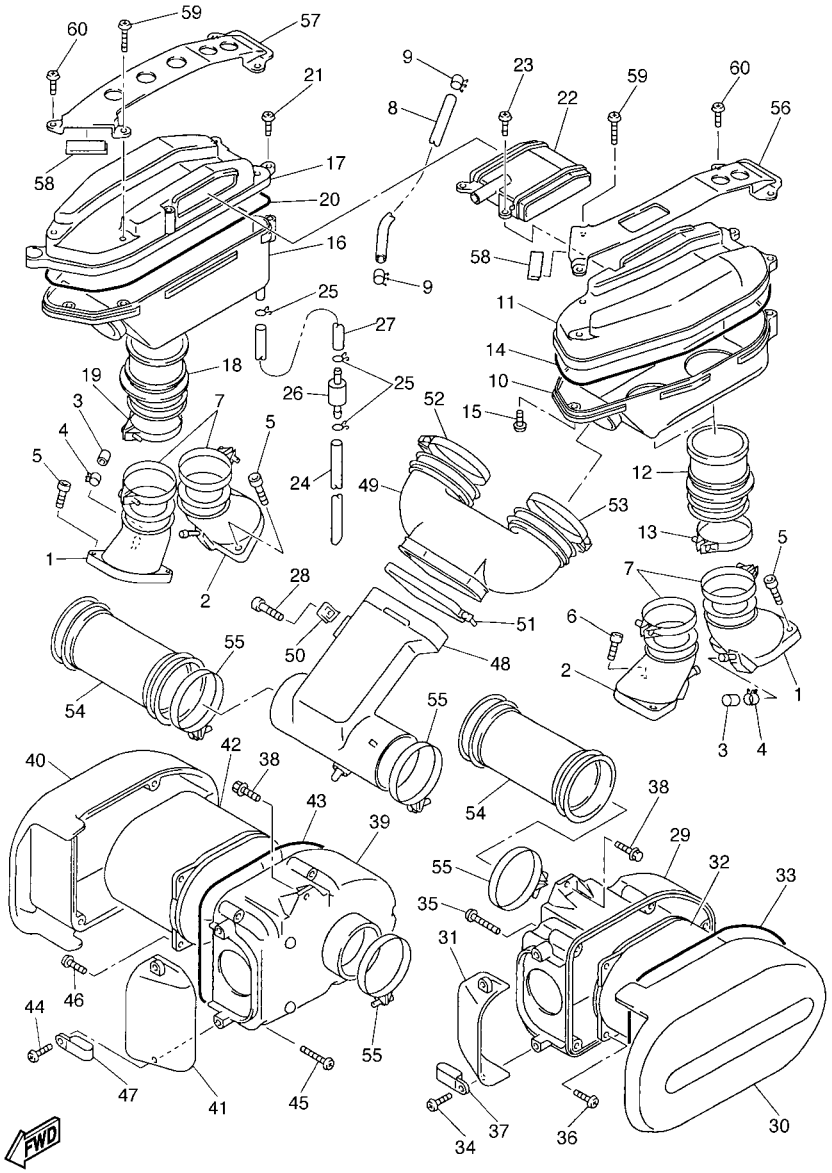

1D61100-D090

FIG. 9 INTAKE

REF. NO.	PART NO.	DESCRIPTION	1D6S	1D6T				REMARKS
28	91314–06035	BOLT, HEXAGON SOCKET HEAD	1	1				
29	4XY–14431–02	SILENCER, INTAKE 1	1	1				
30	4XY–1442A–00	COVER, CLEANER CASE 3	1	1				
31	4XY–14437–00	DUCT	1	1				
32	4XY–14451–01	ELEMENT, AIR CLEANER	1	1				
33	4XY–14452–00	SEAL	1	1				
34	97707–50125	SCREW, TAPPING	2	2				
35	97707–50140	SCREW, TAPPING	5	5				
36	97707–50116	SCREW, TAPPING	2	2				
37	90461–05003	CLAMP	1	1				
38	95804–06012	BOLT, FLANGE	4	4				
39	4XY–14431–02	SILENCER, INTAKE 1	1	1				
40	4XY–1442A–00	COVER, CLEANER CASE 3	1	1				
41	4XY–14437–00	DUCT	1	1				
42	4XY–14451–01	ELEMENT, AIR CLEANER	1	1				
43	4XY–14452–00	SEAL	1	1				
44	97707–50125	SCREW, TAPPING	2	2				
45	97707–50140	SCREW, TAPPING	5	5				
46	97707–50116	SCREW, TAPPING	2	2				
47	90461–05003	CLAMP	1	1				
48	4XY–1441A–00	COVER, CLEANER CASE 1	1	1				
49	4XY–14463–00	JOINT, AIR CLEANER 2	1	1				
50	90183–06069	NUT, SPRING	1	1				
51	4XY–14455–00	BAND	1	1				
52	90460–65169	CLAMP, HOSE	1	1				
53	1D6–11387–00	CLAMP, HOSE 1	1	1				
54	4XY–14454–00	JOINT	2	2				

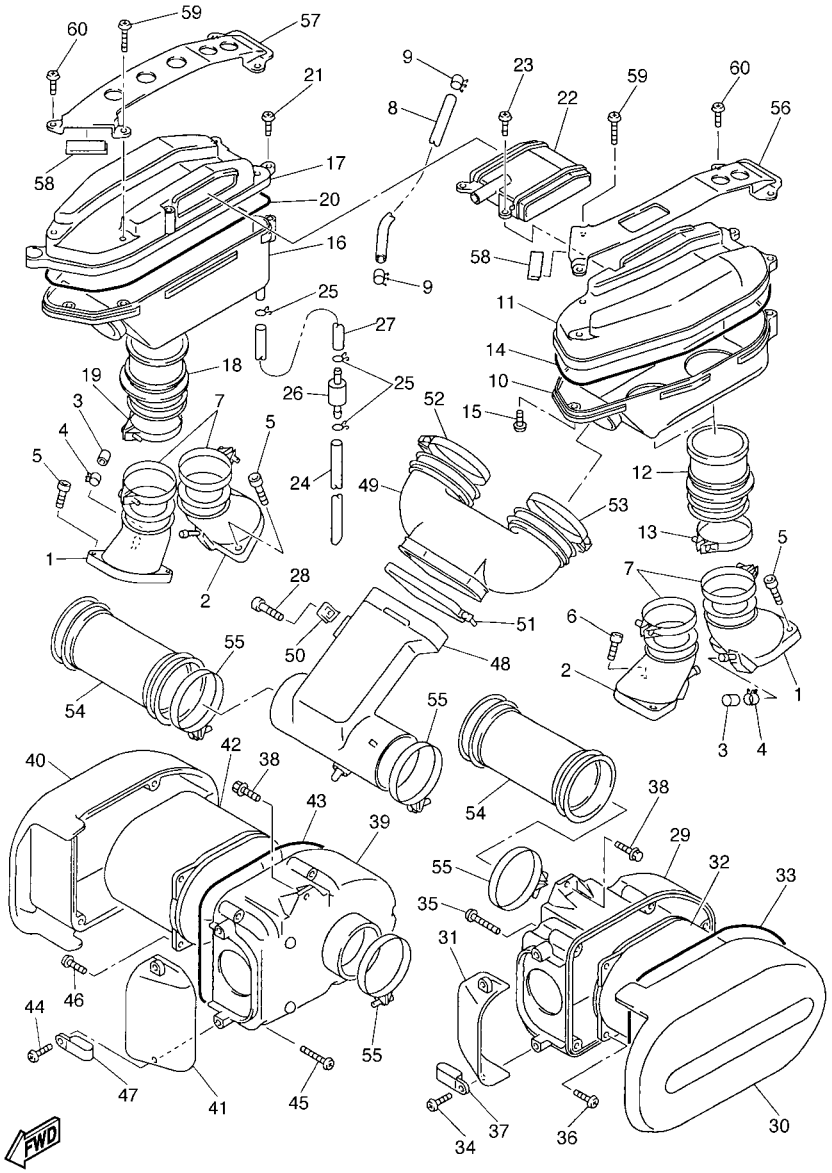

FIG. 9 INTAKE

REF. NO.	PART NO.	DESCRIPTION	1D6S	1D6T				REMARKS
55	90460–65169	CLAMP, HOSE	4	4				
56	4XY–82361–00	CLAMP, CORD	1	1				
57	4XY–82362–00	CLAMP, CORD 2	1	1				
58	4XY–82388–01	PLATE	2	2				
59	97707–50140	SCREW, TAPPING	2	2				
60	97707–50125	SCREW, TAPPING	6	6				

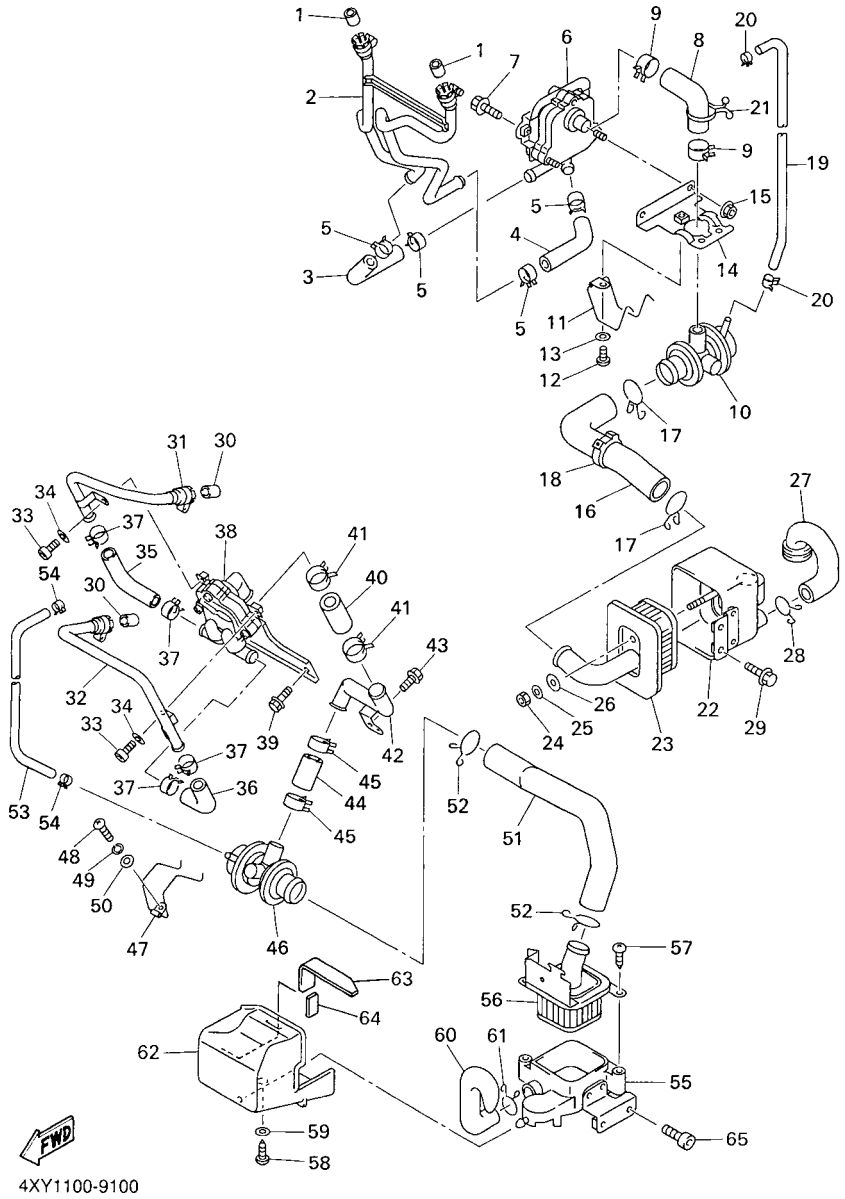

FIG. 10 AIR INDUCTION SYSTEM

REF. NO.	PART NO.	DESCRIPTION	1D6S	1D6T				REMARKS
1	4KM–14714–01	GASKET, MUFFLER	2	2				
2	4XY–14872–00	PIPE 2	1	1				
3	4XY–14881–00	HOSE, BEND 1	1	1				
4	4XY–14881–10	HOSE, BEND 1	1	1				
5	90468–08104	CLIP	4	4				
6	4XY–14808–00	REED VALVE ASSY	1	1				
7	95827–06012	BOLT, FLANGE	2	2				
8	4XY–14882–10	HOSE, BEND 2	1	1				
9	90467–19160	CLIP	2	2				
10	4XY–14840–00	AIR CUT VALVE ASSY	1	1				
11	90462–20188	CLAMP	1	1				
12	98507–06014	SCREW, PAN HEAD	1	1				
13	92907–06600	WASHER, PLATE	1	1				
14	4XY–14868–00	BRACKET 2	1	1				
15	95707–06500	NUT, FLANGE	2	2				
16	4XY–14882–00	HOSE, BEND 2	1	1				
17	90467–24096	CLIP	2	2				
18	90464–25217	CLAMP	1	1				
19	90445–086K4	HOSE (L985)	1	1				
20	90467–08092	CLIP	2	2				
21	90464–25267	CLAMP	1	1				
22	4XY–14857–00	CASE, AIR CLEANER	1	1				
23	4XY–14858–00	CAP, CASE	1	1				
24	95307–05600	NUT	1	1				
25	92907–05200	WASHER	1	1				
26	90202–05057	WASHER, PLATE	1	1				
27	4XY–14883–00	HOSE, BEND 3	1	1				

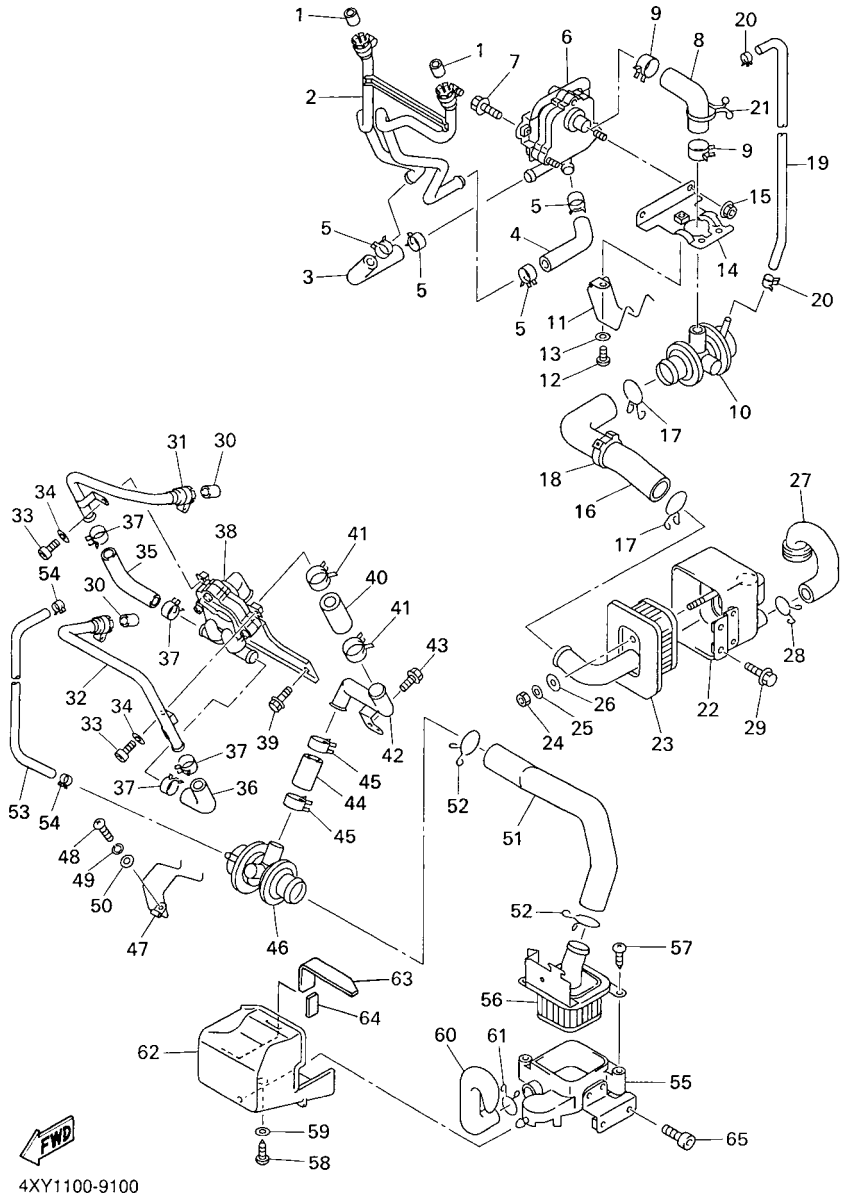

FIG. 10 AIR INDUCTION SYSTEM

REF. NO.	PART NO.	DESCRIPTION	1D6S	1D6T				REMARKS
28	90467–20030	CLIP	1	1				
29	95827–06012	BOLT, FLANGE	2	2				
30	4KM–14714–01	GASKET, MUFFLER	2	2				
31	4XY–14873–00	PIPE 3	1	1				
32	4XY–14874–00	PIPE 4	1	1				
33	91317–06012	BOLT	2	2				
34	92907–06600	WASHER, PLATE	2	2				
35	4XY–14886–00	HOSE, BEND 6	1	1				
36	4XY–14886–10	HOSE, BEND 6	1	1				
37	90468–08104	CLIP	4	4				
38	4XY–14808–10	REED VALVE ASSY	1	1				
39	95807–06012	BOLT, FLANGE	1	1				
40	4XY–14884–00	HOSE, BEND 4	1	1				
41	90467–19160	CLIP	2	2				
42	4XY–14875–00	PIPE 5	1	1				
43	95817–06012	BOLT, FLANGE	1	1				
44	4XY–14884–10	HOSE, BEND 4	1	1				
45	90467–19160	CLIP	2	2				
46	4XY–14840–10	AIR CUT VALVE ASSY	1	1				
47	90462–20188	CLAMP	1	1				
48	98507–06016	SCREW, PAN HEAD	1	1				
49	92907–06100	WASHER, SPRING	1	1				
50	92907–06600	WASHER, PLATE	1	1				
51	4XY–14885–00	HOSE, BEND 5	1	1				
52	90467–24096	CLIP	2	2				
53	90445–091J2	HOSE (L685)	1	1				
54	90467–08092	CLIP	2	2				

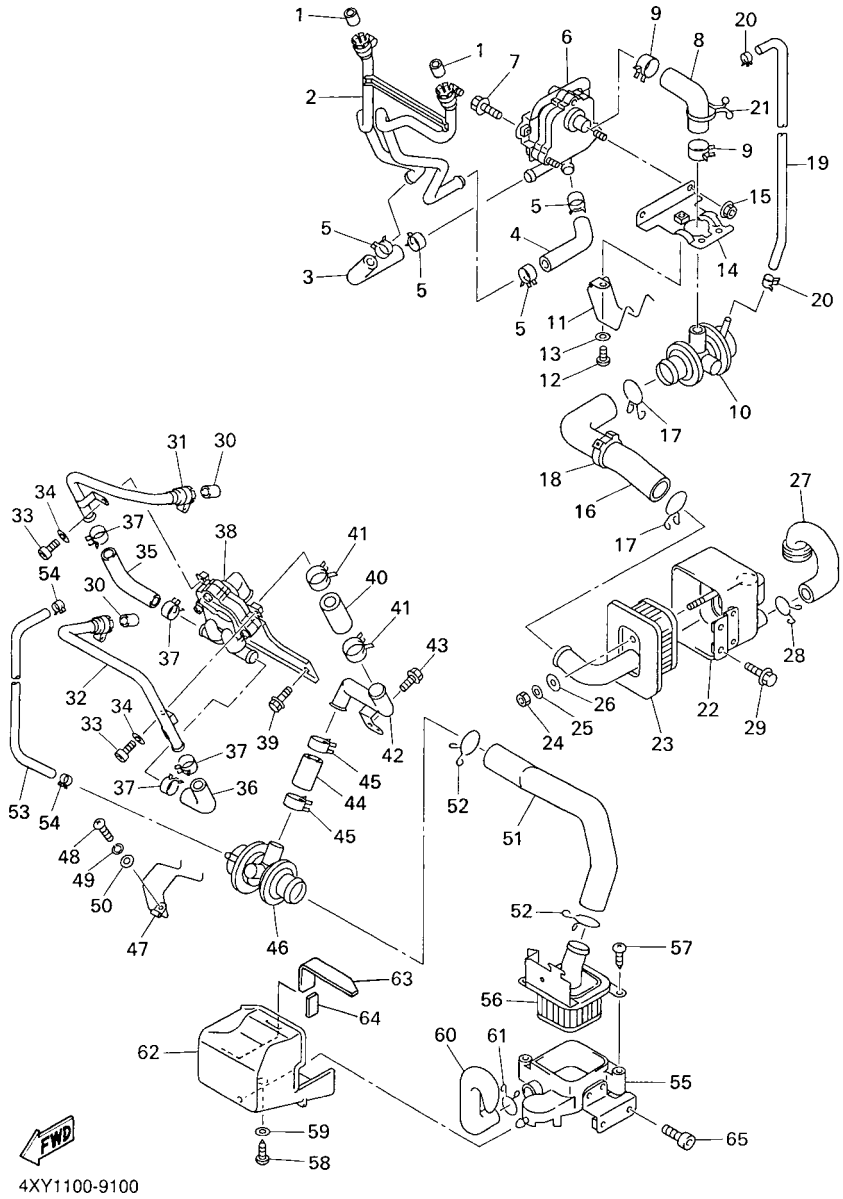

FIG. 10 AIR INDUCTION SYSTEM

REF. NO.	PART NO.	DESCRIPTION	1D6S	1D6T				REMARKS
55	4XY–14857–10	CASE, AIR CLEANER	1	1				
56	4XY–14858–10	CAP, CASE	1	1				
57	97707–50112	SCREW, TAPPING	2	2				
58	97707–50114	SCREW, TAPPING	1	1				
59	90201–05725	WASHER, PLATE	1	1				
60	4XY–14887–10	HOSE, BEND 7	1	1				
61	90467–20030	CLIP	1	1				
62	4XY–1479H–00	COVER, 1	1	1				
63	4XY–14829–00	SEAL, DUST	1	1				
64	4XY–14855–00	SEAL, DUST	1	1				
65	91317–06016	BOLT	2	2				

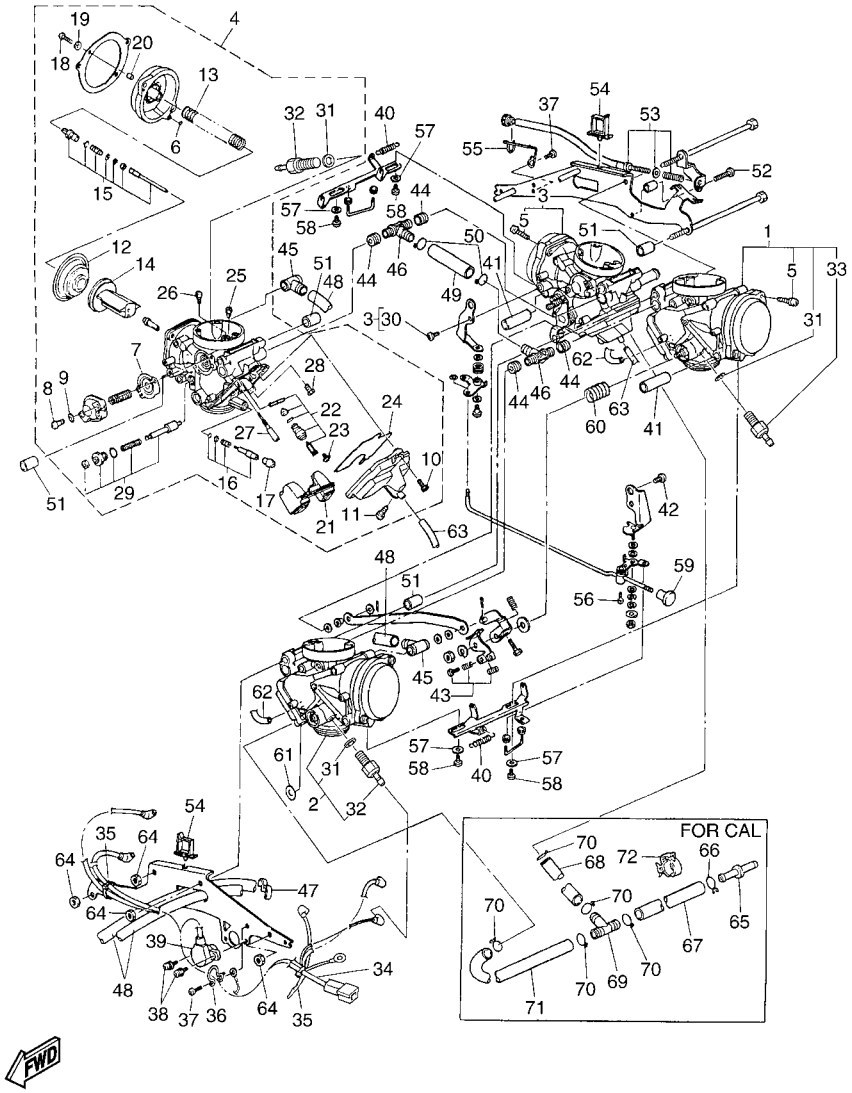

1D6G100-G110

FIG. 11 CARBURETOR

REF. NO.	PART NO.	DESCRIPTION	1D6S	1D6T				REMARKS
1	4XY–14901–81	CARBURETOR ASSY 1	1					
	4XY–14901–61	CARBURETOR ASSY 1		1				
2	4XY–14902–81	CARBURETOR ASSY 2	1					
	4XY–14902–61	CARBURETOR ASSY 2		1				
3	4XY–14903–81	CARBURETOR ASSY 3	1					
	4XY–14903–61	CARBURETOR ASSY 3		1				
4	4XY–14904–81	CARBURETOR ASSY 4	1					
	4XY–14904–61	CARBURETOR ASSY 4		1				
5	4KM–14216–00	.SCREW	2	2				#1,2,3
6	354–14147–00	.O-RING	1	1				
7	5AP–14940–00	.DIAPHRAGM ASSY	1	1				
8	98507–04014	.SCREW, PAN HEAD	2	2				
9	92907–04100	.WASHER, SPRING	2	2				
10	91317–05012	.BOLT	3	3				
11	4KP–14191–00	.PLUG, DRAIN	1	1				
12	5DM–14940–00	.DIAPHRAGM ASSY	1	1				
13	4XY–14933–00	.SPRING, DIAPHRAGM	1	1				
14	5DM–14112–00	.VALVE, THROTTLE 1	1	1				
15	4XY–1490J–00	.NEEDLE SET	1	1				
16	4XY–14105–00	.PILOT SCREW SET	1	1				
17	4XY–14118–00	.CAP	1	1				
18	98507–05018	.SCREW, PAN HEAD	2	2				#4
19	92907–05100	.WASHER, SPRING	2	2				#4
20	4KM–14194–00	.RING	2	2				#4
21	4SV–14985–00	.FLOAT	1	1				
22	4KM–14107–15	.NEEDLE VALVE SET	1	1				
23	1FN–14565–00	.SCREW	1	1				

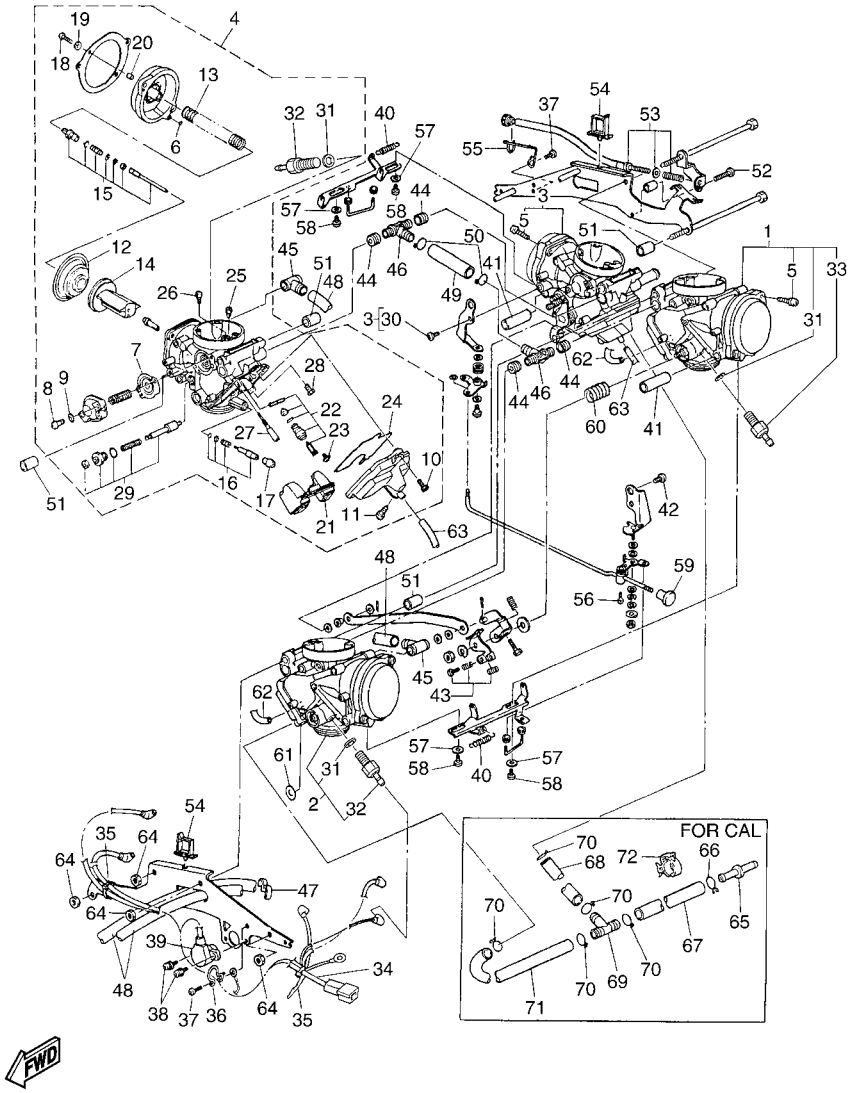

1D6G100-G110

FIG. 11 CARBURETOR

REF. NO.	PART NO.	DESCRIPTION	1D6S	1D6T				REMARKS
24	4XV–14562–00	.O-RING	1	1				
25	1HX–14231–17	.JET, MAIN (# 85)	1	1				
26	1HX–14231–28	.JET, MAIN (#140)	1	1				
27	4KM–14142–15	.JET, PILOT (# 15)	1	1				
28	3G2–1423A–75	.JET, MAIN (#122.5)	1	1				UR #1,2
	3G2–1423A–74	.JET, MAIN (#117.5)	1	1				UR #3
	3G2–14231–24	.JET, MAIN (#120)	1	1				UR #4
29	4SV–1410A–00	.STARTER SET	1	1				
30	98607–05110	.SCREW, OVAL HEAD	1	1				#3
31	90201–08016	.WASHER, PLATE	1	1				
32	5FU–83790–00	.HEATER ASSY (15W)	1	1				#2,4
33	5FU–83790–20	.HEATER ASSY (30W)	1	1				#1,3
34	1D6–81517–00	WIRE, SUB LEAD	1	1				
35	35H–14139–00	CLIP, PIPE	4	4				
36	4XY–14159–00	CLIP	1	1				
37	98507–05006	SCREW, PAN HEAD	2	2				
38	4WM–14565–00	SCREW	2	2				
39	4HM–85885–20	THROTTLE POSITION SENSOR ASSY	1	1				
40	5DM–14935–00	SPRING	2	2				
41	4XY–14148–00	PIPE	2	2				
42	98607–05110	SCREW, OVAL HEAD	1	1				
43	3EN–1490K–00	STOP SCREW SET	2	2				
44	3EN–14997–00	SEAL	4	4				
45	5DM–14396–10	PIPE	2	2				
46	4XY–14251–00	NIPPLE	2	2				
47	90464–09M31	CLAMP	1	1				
48	4XY–14349–00	PIPE	2	2				

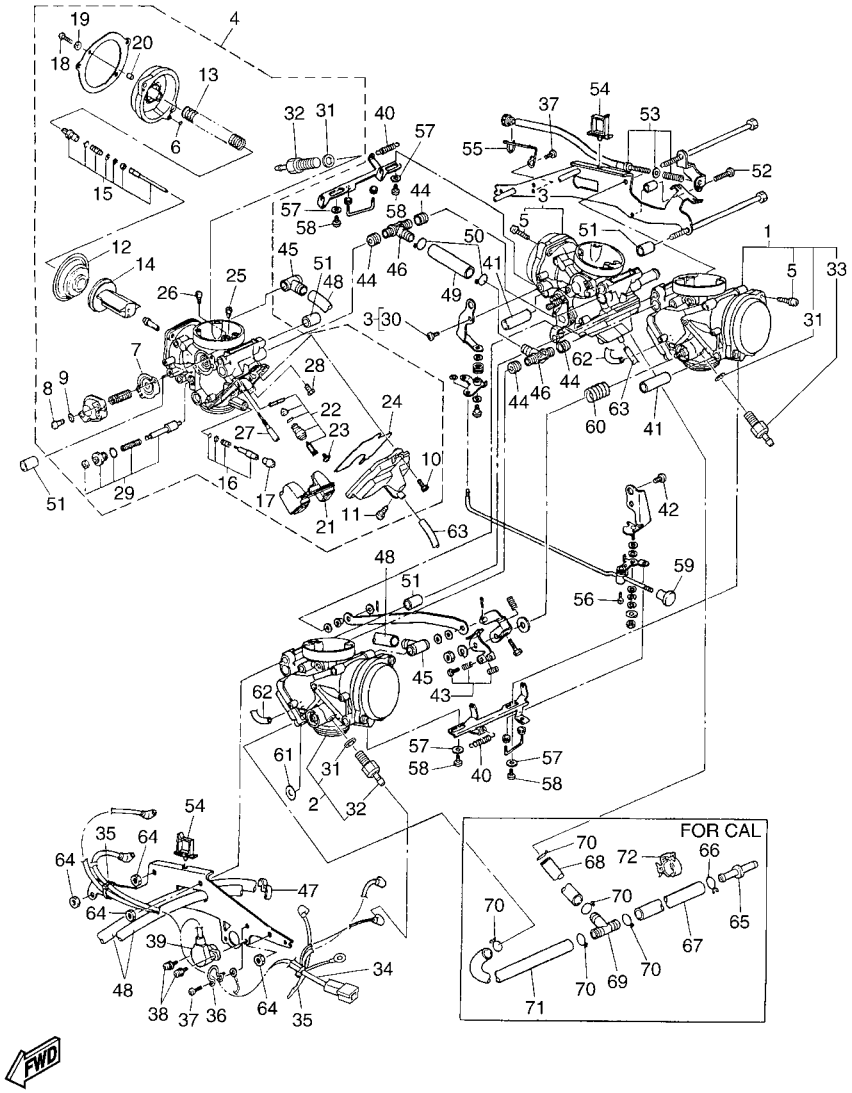

1D6G100-G110

FIG. 11 CARBURETOR

REF. NO.	PART NO.	DESCRIPTION	1D6S	1D6T				REMARKS
49	4XY–14349–11	PIPE	1	1				
50	4NK–14137–00	CLIP	2	2				
51	4XY–14148–10	PIPE	4	4				
52	98507–05020	SCREW, PAN HEAD	1	1				
53	4XY–14103–00	THROTTLE SCREW SET	1	1				
54	4XY–14137–00	CLIP	2	2				
55	4XY–14139–00	CLIP, PIPE	1	1				
56	4XY–14565–00	SCREW	1	1				
57	4NK–14327–00	PACKING	4	4				
58	4XY–24453–10	SCREW	4	4				
59	4XY–14261–00	HOLDER	1	1				
60	4XY–14286–00	SPRING	1	1				
61	4KG–14285–00	WASHER	1	1				
62	3JD–14197–00	PIPE	2	2				
63	4FU–14197–00	PIPE	2	2				
64	95307–06600	NUT	4	4				
65	4XY–14568–00	JOINT		1				
66	90467–10041	CLIP		1				
67	4XY–14349–21	PIPE		1				
68	51L–14987–01	HOSE		1				
69	3H3–24376–00	PIPE, JOINT 1		1				
70	3UH–14937–00	CLIP		5				
71	3UH–14294–01	HOSE		1				
72	90464–15192	CLAMP		1				

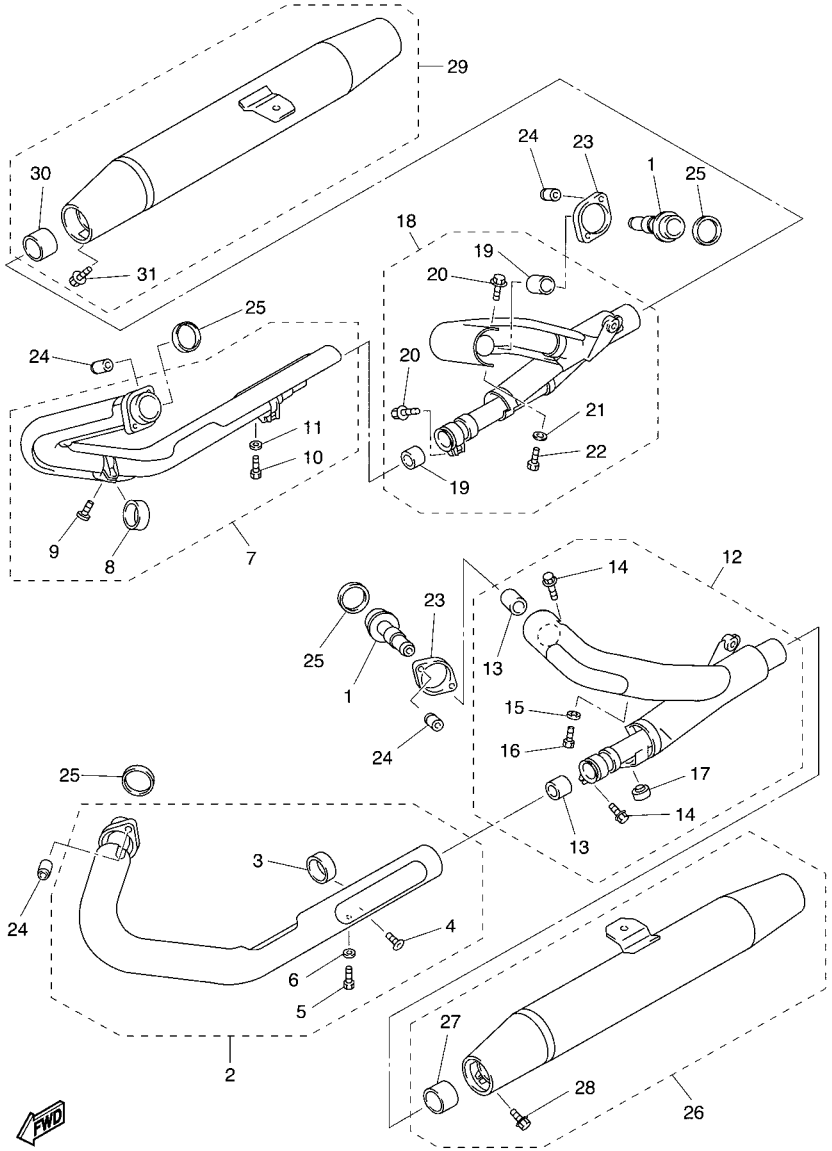

4XY1100-9130

FIG. 12 EXHAUST

REF. NO.	PART NO.	DESCRIPTION	1D6S	1D6T				REMARKS
1	4YE–14614–00	FLANGE, EXHAUST PIPE	2	2				
2	4NK–14620–01	EXHAUST PIPE ASSY 2	1	1				
3	4NK–14714–00	.GASKET, MUFFLER	2	2				
4	92017–08025	.BOLT, BUTTON HEAD	2	2				
5	97080–06008	.BOLT	1	1				
6	92990–06600	.WASHER, PLATE	1	1				
7	4NK–14650–01	EXHAUST PIPE ASSY 4	1	1				
8	4NK–14714–00	.GASKET, MUFFLER	2	2				
9	92017–08025	.BOLT, BUTTON HEAD	2	2				
10	97080–06008	.BOLT	1	1				
11	92990–06600	.WASHER, PLATE	1	1				
12	4XY–14730–00	CHAMBER ASSY	1	1				
13	4BH–14714–00	.GASKET, MUFFLER	2	2				
14	95024–08020	.BOLT, FLANGE	2	2				
15	92990–06600	.WASHER, PLATE	1	1				
16	97080–06008	.BOLT	1	1				
17	116–27114–00	.STOPPER, MAIN STAND	1	1				
18	4XY–14730–10	CHAMBER ASSY	1	1				
19	4BH–14714–00	.GASKET, MUFFLER	2	2				
20	95024–08020	.BOLT, FLANGE	2	2				
21	92990–06600	.WASHER, PLATE	1	1				
22	97080–06008	.BOLT	1	1				
23	4KG–14612–01	NUT, RING	2	2				
24	90179–08442	NUT	8	8				
25	3GD–14613–00	GASKET, EXHAUST PIPE	4	4				
26	1D6–14710–00	MUFFLER ASSY 1	1	1				
27	3XW–14714–00	.GASKET, MUFFLER	1	1				

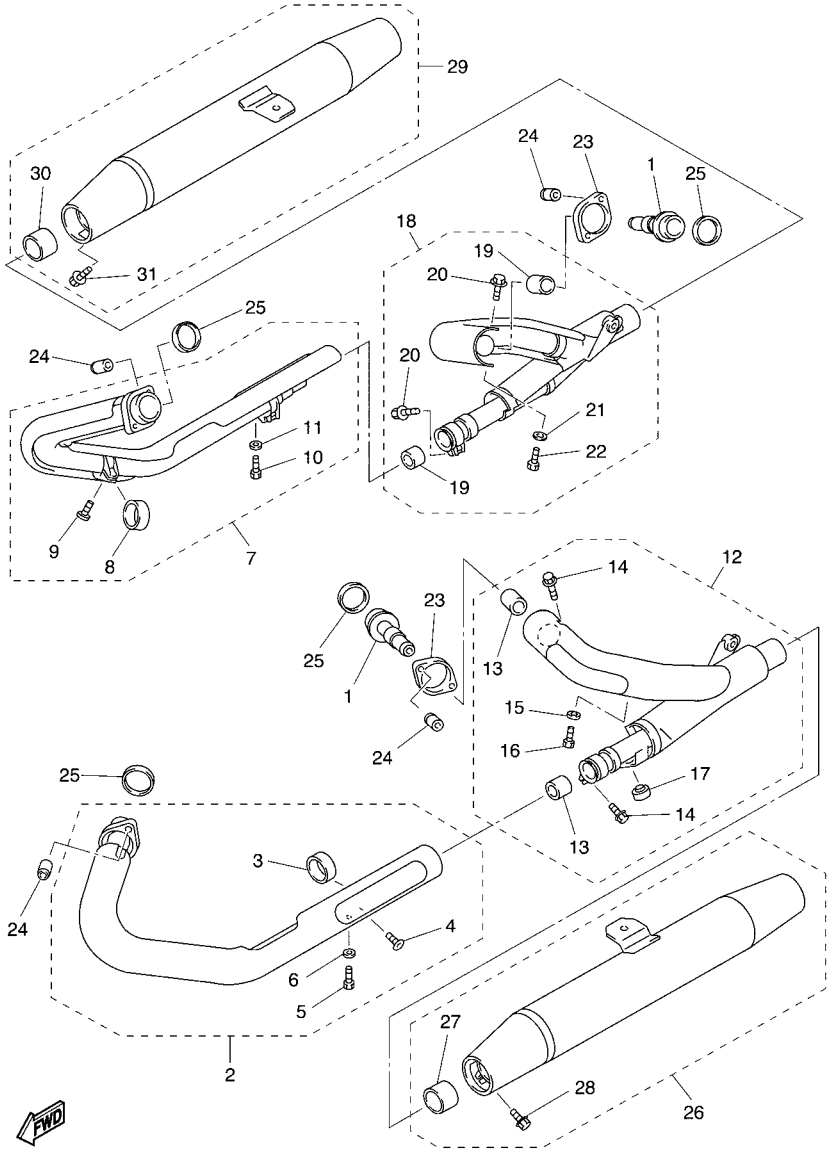

FIG. 12 EXHAUST

REF. NO.	PART NO.	DESCRIPTION	1D6S	1D6T				REMARKS
28	95814–08025	.BOLT, FLANGE	1	1				
29	1D6–14720–00	MUFFLER ASSY 2	1	1				
30	3XW–14714–00	.GASKET, MUFFLER	1	1				
31	95814–08025	.BOLT, FLANGE	1	1				

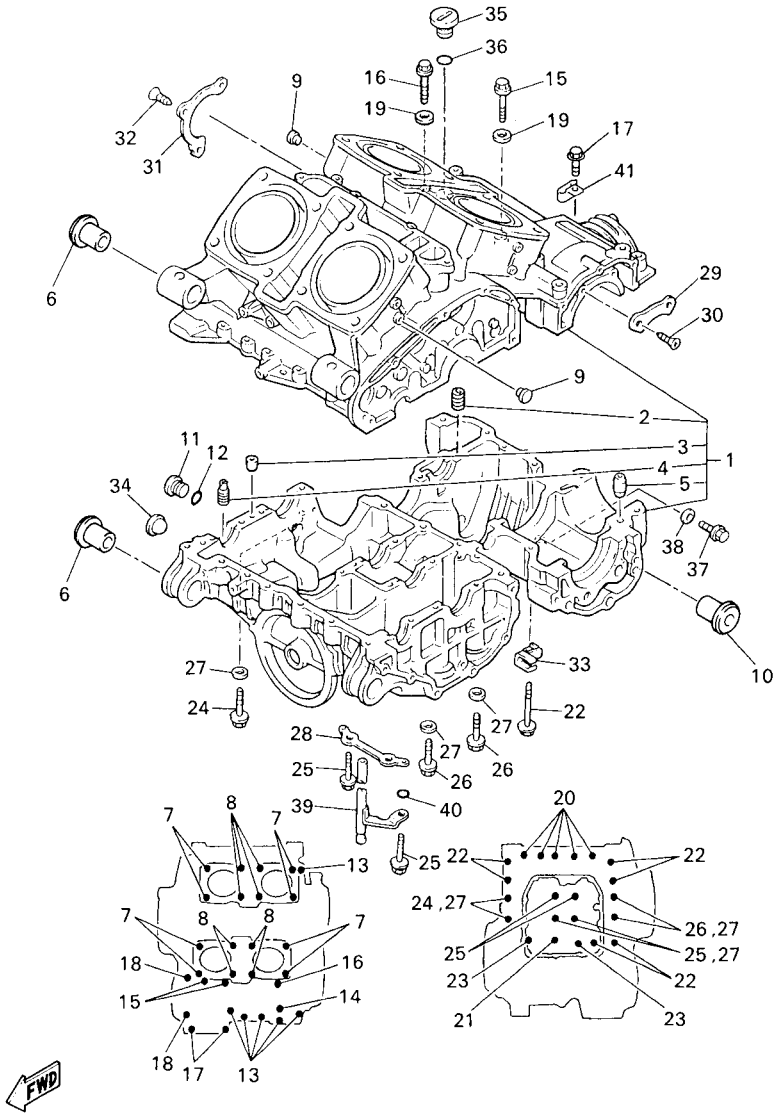

4XY4100-0140

FIG. 13 CRANKCASE

REF. NO.	PART NO.	DESCRIPTION	1D6S	1D6T				REMARKS
1	4XY–15100–20	CRANKCASE ASSY	1	1				
2	26H–15138–00	.NOZZLE 1	1	1				
3	26H–15148–00	.NOZZLE 2	1	1				
4	4G0–15138–00	.NOZZLE 1	1	1				
5	99530–10114	.PIN, DOWEL	1	1				
6	4XY–15541–00	COLLAR	4	4				
7	90116–10411	BOLT, STUD	8	8				
8	90116–10429	BOLT, STUD	8	8				
9	90338–11152	PLUG	4	4				
10	4XY–15542–00	COLLAR 2	2	2				
11	4H7–15189–00	PLUG	1	1				
12	93210–22382	O-RING	1	1				
13	95814–06045	BOLT, FLANGE	6	6				
14	95814–06070	BOLT, FLANGE	1	1				
15	95814–06090	BOLT, FLANGE	2	2				
16	95817–06095	BOLT, FLANGE	1	1				
17	95814–08045	BOLT, FLANGE	2	2				
18	95814–08080	BOLT, FLANGE	2	2				
19	90430–06166	GASKET	2	2				
20	95817–08050	BOLT, FLANGE	5	5				
21	95817–08065	BOLT, FLANGE	1	1				
22	95814–08080	BOLT, FLANGE	6	6				
23	95817–08095	BOLT, FLANGE	2	2				
24	90109–103G0	BOLT	2	2				
25	90105–10248	BOLT, FLANGE	4	4				
26	90105–10249	BOLT, FLANGE	2	2				
27	90201–11597	WASHER, PLATE	6	6				

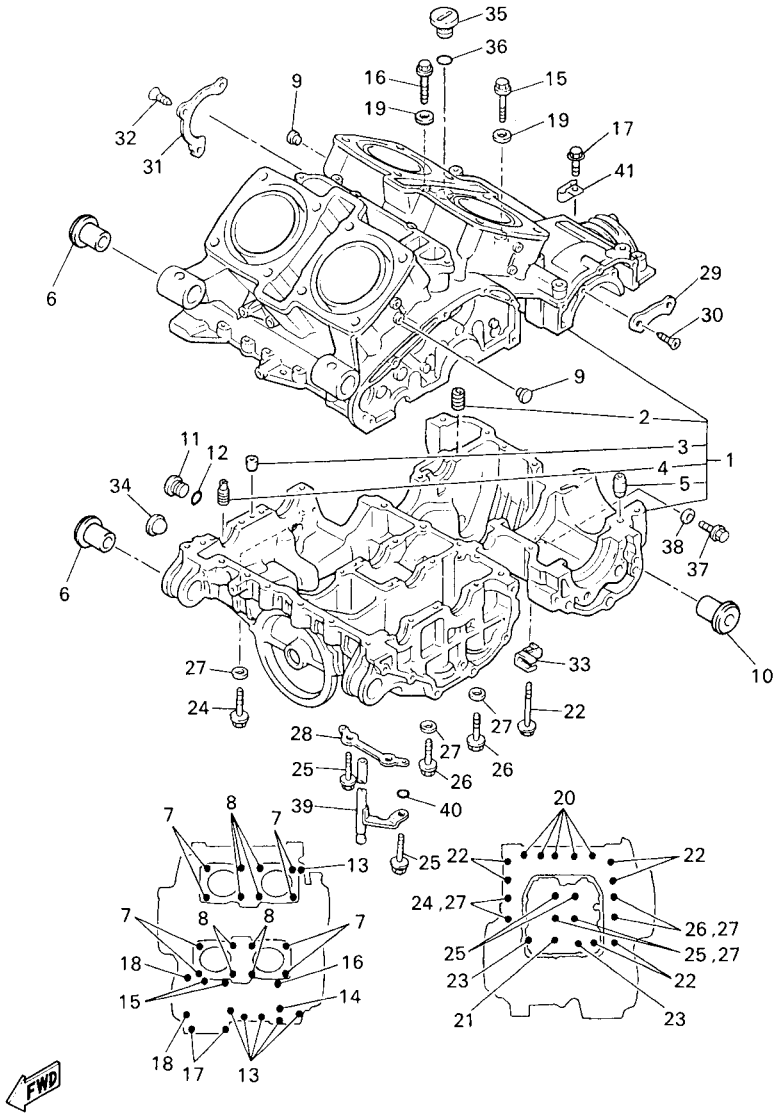

4XY4100-0140

FIG. 13 CRANKCASE

REF. NO.	PART NO.	DESCRIPTION	1D6S	1D6T				REMARKS
28	26H–15113–00	PLATE	1	1				
29	26H–15381–00	PLATE, BEARING COVER	2	2				
30	90149–08152	SCREW	4	4				
31	26H–15383–00	PLATE, BEARING COVER	1	1				
32	90151–06041	SCREW, COUNTERSUNK	3	3				
33	90465–08233	CLAMP	1	1				
34	2H7–15361–00	GAUGE, LEVEL	1	1				
35	4NK–15363–00	PLUG, OIL	1	1				
36	93210–27370	O-RING	1	1				
37	95807–12016	BOLT, FLANGE	1	1				
38	90201–12790	WASHER, PLATE	1	1				
39	26H–15373–00	PIPE, BREATHER	1	1				
40	93210–06667	O-RING	1	1				
41	90461–14150	CLAMP	1	1				

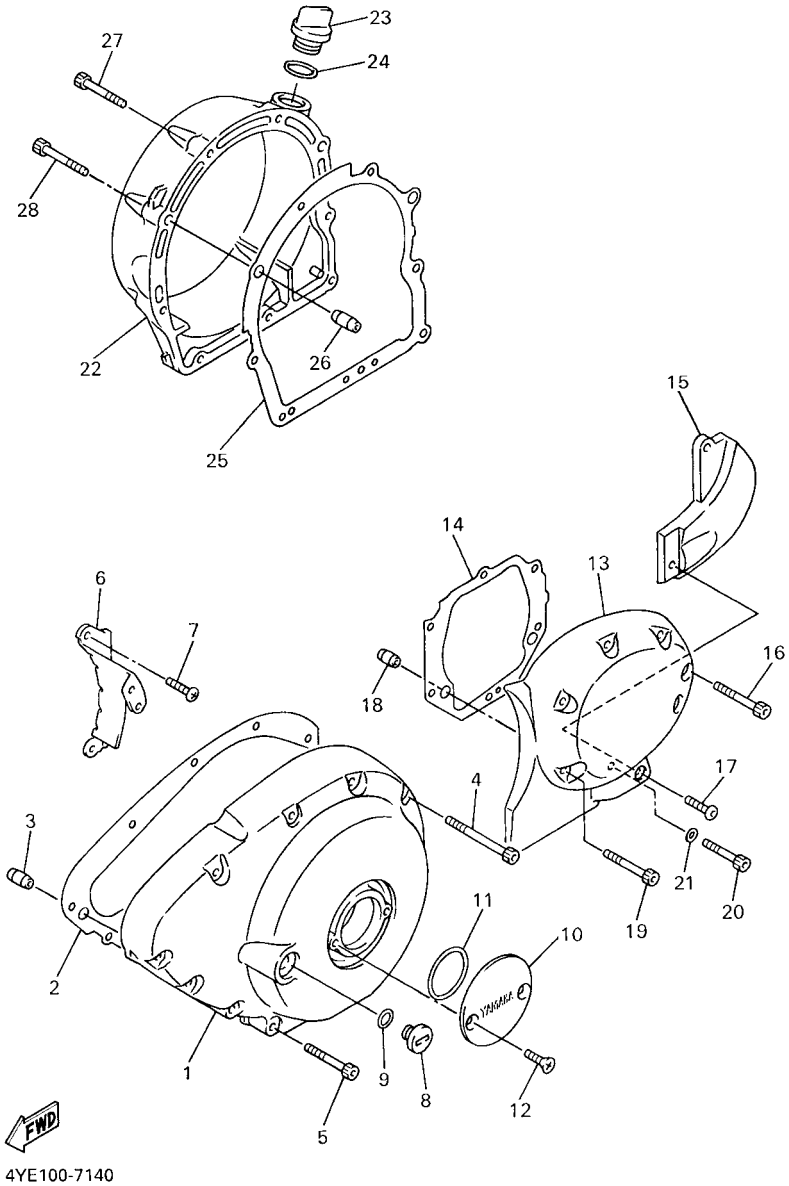

FIG. 14 CRANKCASE COVER 1

REF. NO.	PART NO.	DESCRIPTION	1D6S	1D6T				REMARKS
1	4NK–15411–00	COVER, CRANKCASE 1	1	1				
2	4NK–15451–00	GASKET, CRANKCASE COVER 1	1	1				
3	99530–10114	PIN, DOWEL	2	2				
4	91314–06060	BOLT, HEXAGON SOCKET HEAD	4	4				
5	91314–06045	BOLT, HEXAGON SOCKET HEAD	7	7				
6	4NK–15191–00	PLATE	1	1				
7	98507–06016	SCREW, PAN HEAD	1	1				
8	90340–14139	PLUG, STRAIGHT SCREW	1	1				
9	93210–14369	O-RING	1	1				
10	4NK–15427–00	COVER, CAP 2	1	1				
11	93210–45150	O-RING	1	1				
12	98704–06016	SCREW, FLAT HEAD	2	2				
13	4NK–15421–00	COVER, CRANKCASE 2	1	1				
14	3JP–15461–01	GASKET, CRANKCASE COVER 2	1	1				
15	4NK–15423–00	COVER 2	1	1				
16	91314–06025	BOLT, HEXAGON SOCKET HEAD	1	1				
17	92014–06014	BOLT, BUTTON HEAD	1	1				
18	99530–10114	PIN, DOWEL	2	2				
19	91314–06045	BOLT, HEXAGON SOCKET HEAD	3	3				
20	91314–06035	BOLT, HEXAGON SOCKET HEAD	3	3				
21	90430–06014	GASKET	1	1				
22	4NK–15431–00	COVER, CRANKCASE 3	1	1				
23	2H7–15363–00	PLUG, OIL	1	1				
24	93210–27370	O-RING	1	1				
25	4NK–15462–00	GASKET, CRANKCASE COVER 3	1	1				
26	99530–10114	PIN, DOWEL	2	2				
27	91314–06025	BOLT, HEXAGON SOCKET HEAD	7	7				

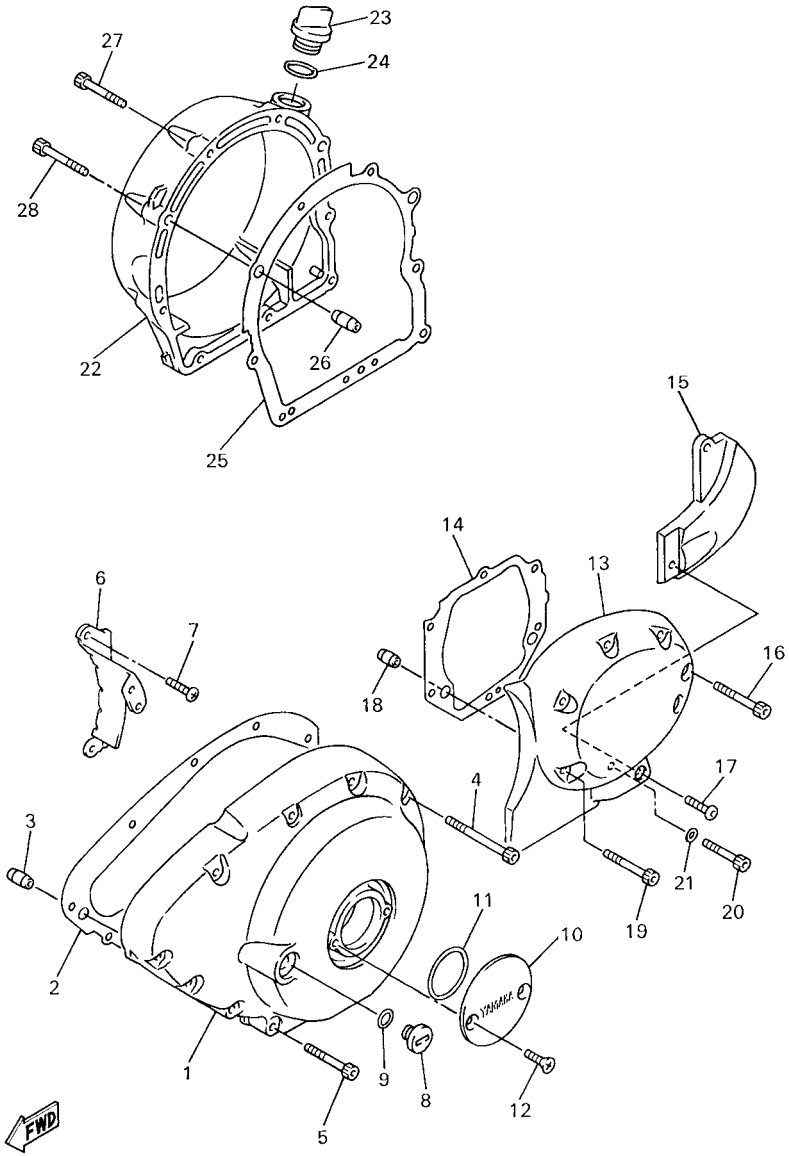

FIG. 14 CRANKCASE COVER 1

REF. NO.	PART NO.	DESCRIPTION	1D6S	1D6T				REMARKS
28	91314–06035	BOLT, HEXAGON SOCKET HEAD	2	2				

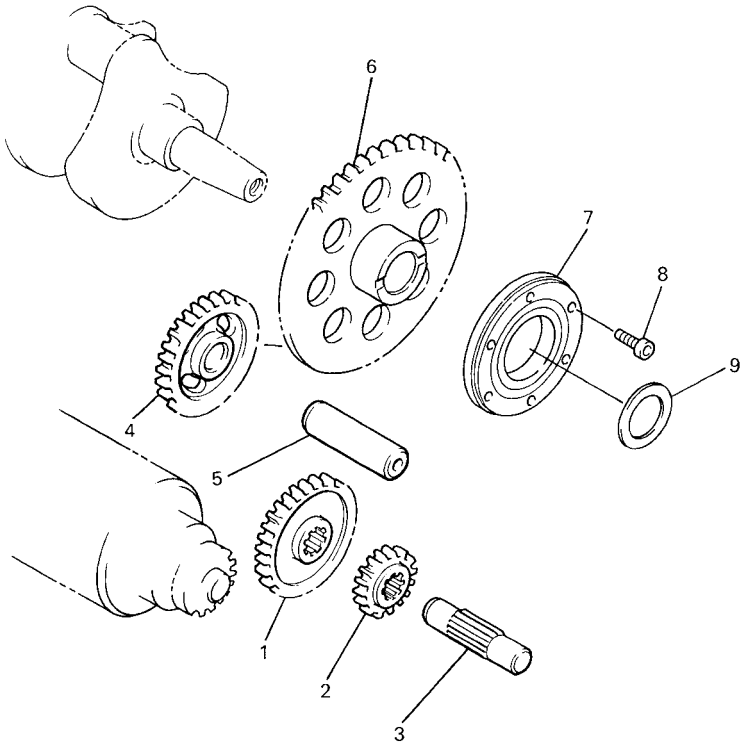

4NK110-6150

FIG. 15 STARTER CLUTCH

REF. NO.	PART NO.	DESCRIPTION	1D6S	1D6T				REMARKS
1	26H–15514–00	GEAR 2 (42T)	1	1				
2	26H–15515–00	GEAR 3 (13T)	1	1				
3	26H–15522–00	SHAFT 2	1	1				
4	26H–15512–00	GEAR, IDLER 1 (27T)	1	1				
5	26H–15521–00	SHAFT 1	1	1				
6	4NK–15517–00	GEAR, IDLER 2 (76T)	1	1				
7	4NK–15590–00	STARTER ONE-WAY ASSY	1	1				
8	90110–08193	BOLT, HEXAGON SOCKET HEAD	6	6				
9	90201–350F3	WASHER, PLATE	1	1				

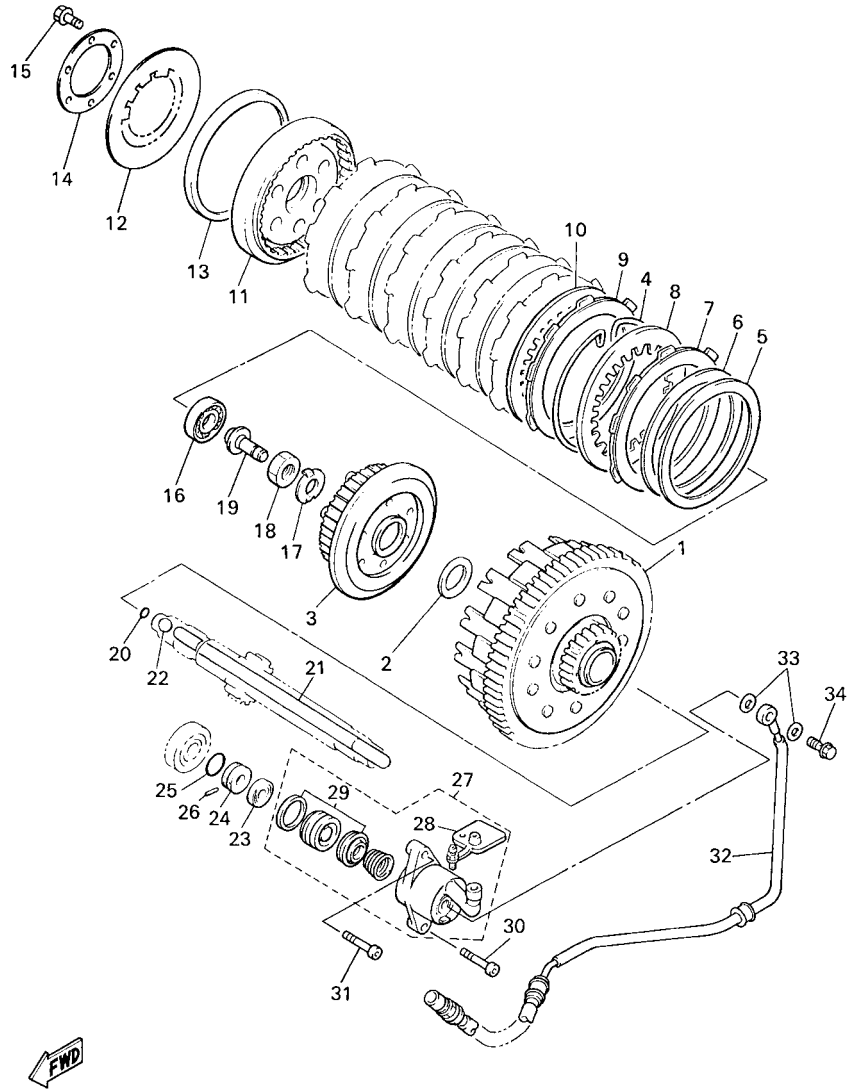

4XY1100-9170

FIG. 16 CLUTCH

REF. NO.	PART NO.	DESCRIPTION	1D6S	1D6T				REMARKS
1	26H–16150–10	PRIMARY DRIVEN GEAR COMP.	1	1				
2	26H–16154–00	PLATE, THRUST 1	1	1				
3	4XY–16371–00	BOSS, CLUTCH	1	1				
4	26H–16385–00	RING, CLUTCH BOSS	1	1				
5	26H–16384–00	PLATE, SEAT	1	1				
6	1FK–16383–00	SPRING, CLUTCH BOSS	1	1				
7	26H–16321–01	PLATE, FRICTION	1	1				
8	26H–16324–00	PLATE, CLUTCH 1	1	1				
9	26H–16307–01	PLATE, FRICTION 3	7	7				
10	26H–16324–00	PLATE, CLUTCH 1	6	6				
11	1FK–16351–00	PLATE, PRESSURE 1	1	1				
12	1FK–16334–00	SPRING, CLUTCH 2	1	1				
13	1FK–16335–00	HOUSING, SPRING	1	1				
14	1FK–16352–00	PLATE, PRESSURE 2	1	1				
15	97007–06025	BOLT	6	6				
16	93306–00304	BEARING	1	1				
17	90215–25218	WASHER, LOCK	1	1				
18	90170–20323	NUT	1	1				
19	4KG–16356–00	ROD, PUSH 1	1	1				
20	93210–06632	O-RING	1	1				
21	4NK–16357–00	ROD, PUSH 2	1	1				
22	93511–32017	BALL	1	1				
23	93109–08061	OIL SEAL	1	1				
24	26H–16399–00	GUIDE, PUSH ROD	1	1				
25	93210–18322	O-RING	1	1				
26	93603–07073	PIN, DOWEL	1	1				
27	1FK–16381–11	PUSH LEVER COMP.	1	1				

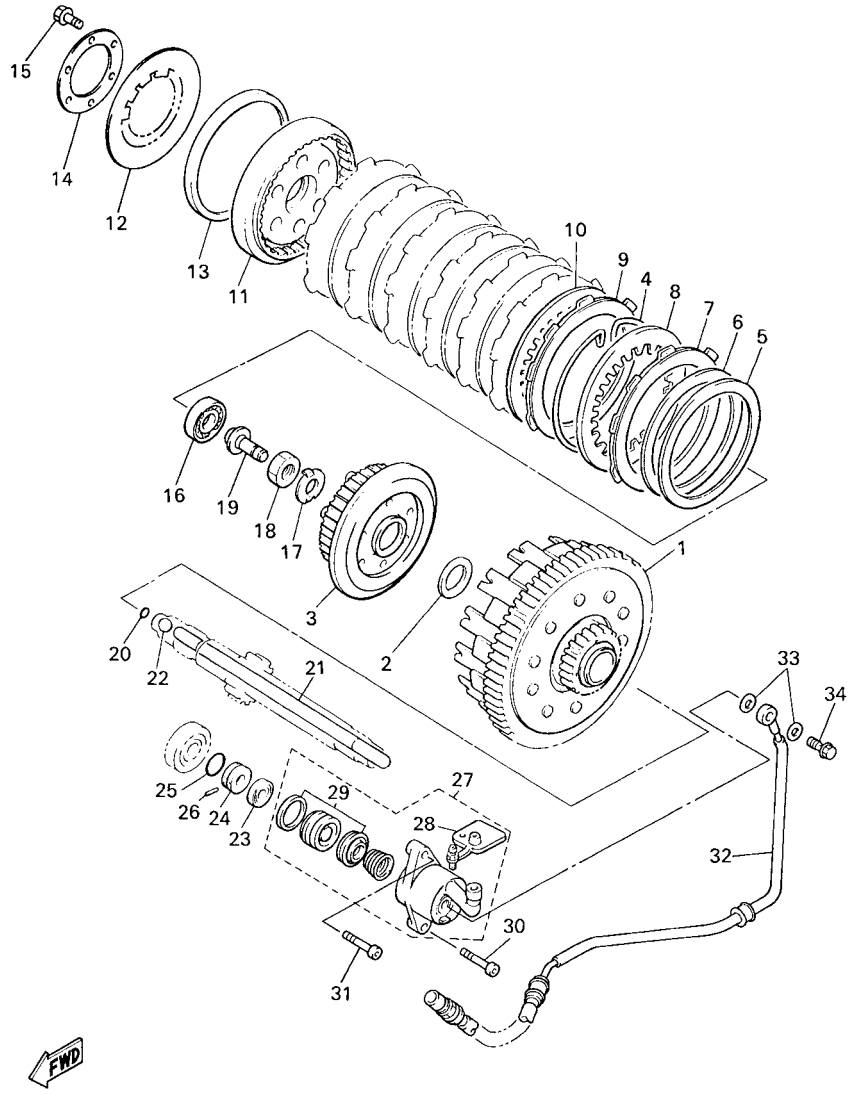

4XY1100-9170

FIG. 16 CLUTCH

REF. NO.	PART NO.	DESCRIPTION	1D6S	1D6T				REMARKS
28	1NL–W0048–00	.BLEED SCREW KIT	1	1				
29	26H–W0098–00	.PUSH LEVER SEAL KIT	1	1				
30	90110–06035	BOLT, HEXAGON SOCKET HEAD	1	1				
31	90110–06243	BOLT, HEXAGON SOCKET HEAD	1	1				
32	4NK–1638A–00	PIPE, CLUTCH 1	1	1				
33	90201–10118	WASHER, PLATE	2	2				
34	90401–10159	BOLT, UNION	1	1				

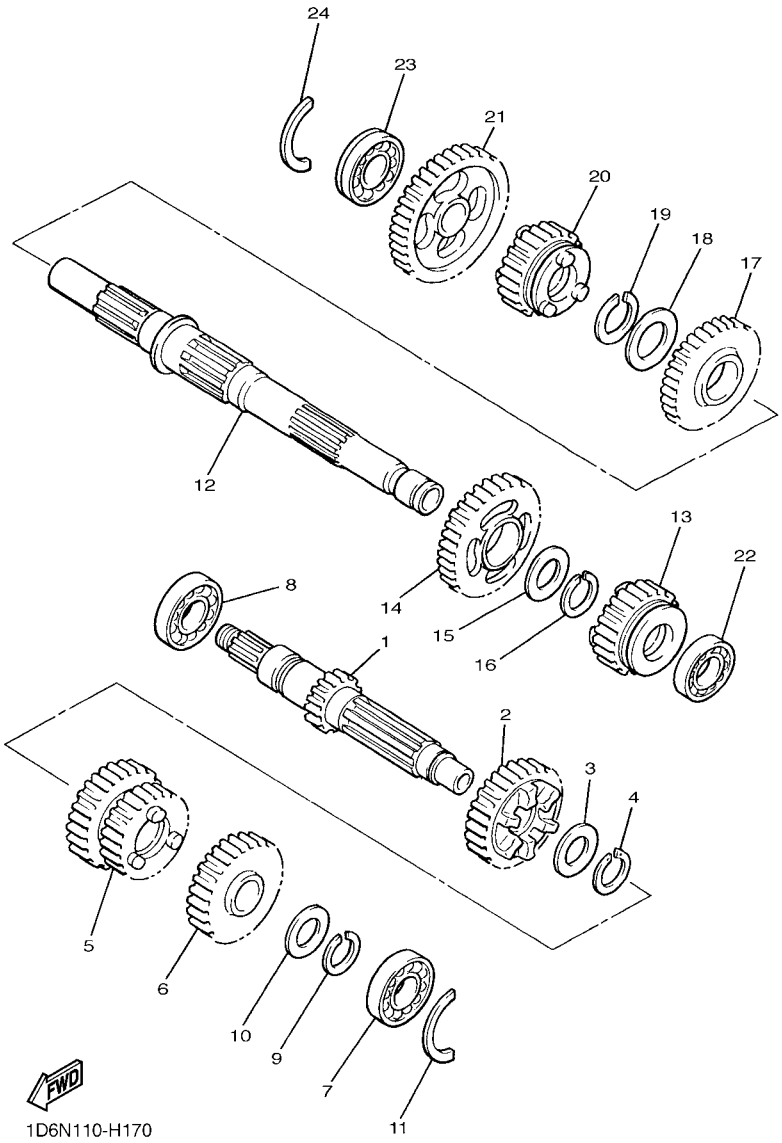

FIG. 17 TRANSMISSION

REF. NO.	PART NO.	DESCRIPTION	1D6S	1D6T				REMARKS
1	4XY–17411–00	AXLE, MAIN (17T)	1	1				
2	4XY–17141–00	GEAR, 4TH PINION (25T)	1	1				
3	90209–25196	WASHER	1	1				
4	93440–28062	CIRCLIP	1	1				
5	4XY–17121–00	GEAR, 2ND/3RD PINION (19/25T)	1	1				
6	4XY–17151–00	GEAR, 5TH PINION (28T)	1	1				
7	93306–30430	BEARING	1	1				
8	93306–36401	BEARING	1	1				
9	93410–23056	CIRCLIP	1	1				
10	90201–232K5	WASHER, PLATE	1	1				
11	93440–52118	CIRCLIP	1	1				
12	4NK–17402–00	DRIVE AXLE ASSY	1	1				
13	4XY–17251–00	GEAR, 5TH WHEEL (22T)	1	1				
14	4XY–17221–00	GEAR, 2ND WHEEL (31T)	1	1				
15	90209–32231	WASHER	1	1				
16	93440–34025	CIRCLIP	1	1				
17	4XY–17231–00	GEAR, 3RD WHEEL (30T)	1	1				
18	90209–27192	WASHER	1	1				
19	93440–30077	CIRCLIP	1	1				
20	4XY–17241–00	GEAR, 4TH WHEEL (24T)	1	1				
21	4XY–17211–00	GEAR, 1ST WHEEL (43T)	1	1				
22	93306–20645	BEARING	1	1				
23	93306–20555	BEARING	1	1				
24	93440–52118	CIRCLIP	1	1				

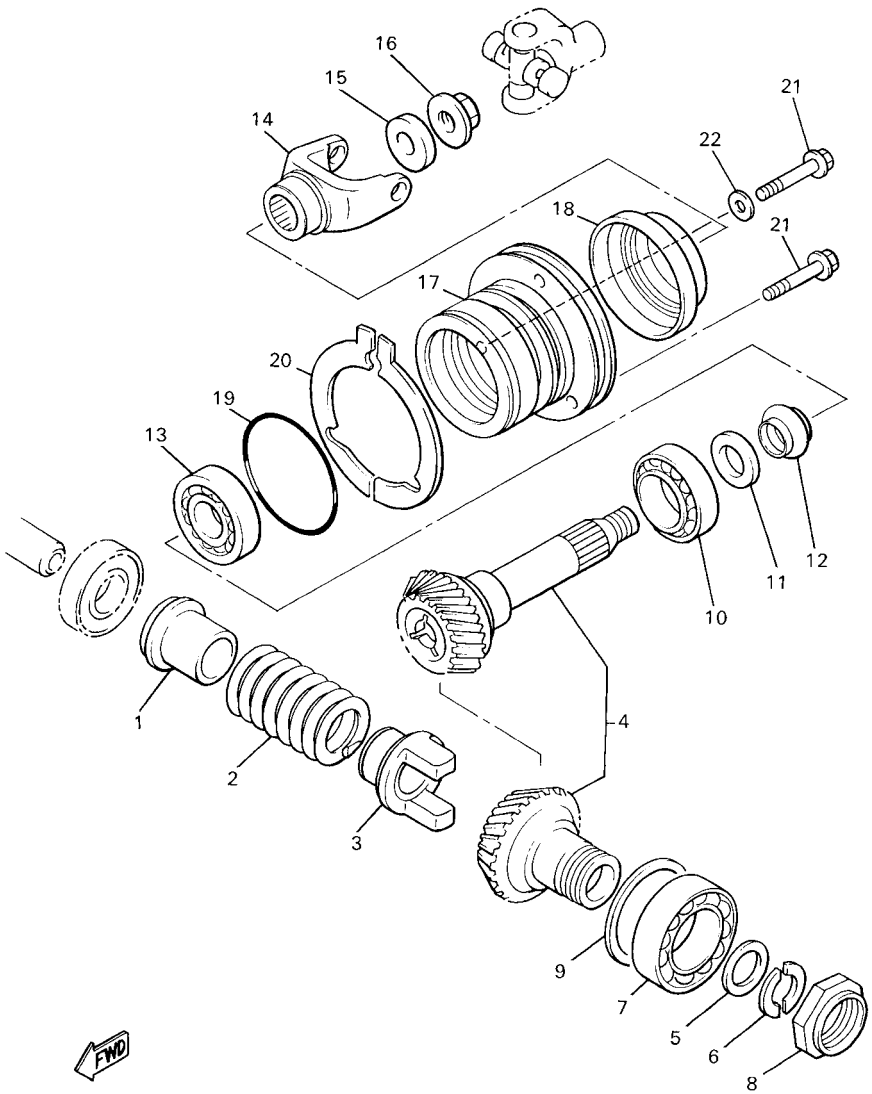

FIG. 18 MIDDLE DRIVE GEAR

REF. NO.	PART NO.	DESCRIPTION	1D6S	1D6T				REMARKS
1	2WE–17524–00	HOLDER	1	1				
2	90501–75638	SPRING, COMPRESSION	1	1				
3	2WE–17527–00	CAM, DRIVEN	1	1				
4	26H–W1751–01	MIDDLE GEAR COMP.	1	1				
5	90201–252K4	WASHER, PLATE	1	1				
6	90209–21281	WASHER	2	2				
7	93306–20901	BEARING	1	1				
8	90179–44328	NUT	1	1				
9	4X7–17531–00–15	SHIM, PINION (0.15T)	1	1				UR
	4X7–17531–00–30	SHIM, PINION (0.30T)	1	1				UR
	4X7–17531–00–40	SHIM, PINION (0.40T)	1	1				UR
	4X7–17531–00–50	SHIM, PINION (0.50T)	1	1				UR
10	93332–00028	BEARING	1	1				
11	90201–25634	WASHER, PLATE	1	1				
12	2H7–17571–01	SPACER, EXPANSION	1	1				
13	93332–00024	BEARING	1	1				
14	26H–17556–00	YOKE, JOINT	1	1				
15	90201–166R6	WASHER, PLATE	1	1				
16	90179–16662	NUT	1	1				
17	26H–17551–00	HOUSING, BEARING	1	1				
18	93101–35085	OIL SEAL	1	1				
19	93210–71360	O-RING	1	1				
20	3UF–17531–00	SHIM, PINION (0.10T)	2	2				UR
	3UF–17531–10	SHIM, PINION (0.15T)	2	2				UR
	3UF–17531–20	SHIM, PINION (0.20T)	2	2				UR
	3UF–17531–30	SHIM, PINION (0.30T)	2	2				UR
	3UF–17531–40	SHIM, PINION (0.40T)	2	2				UR

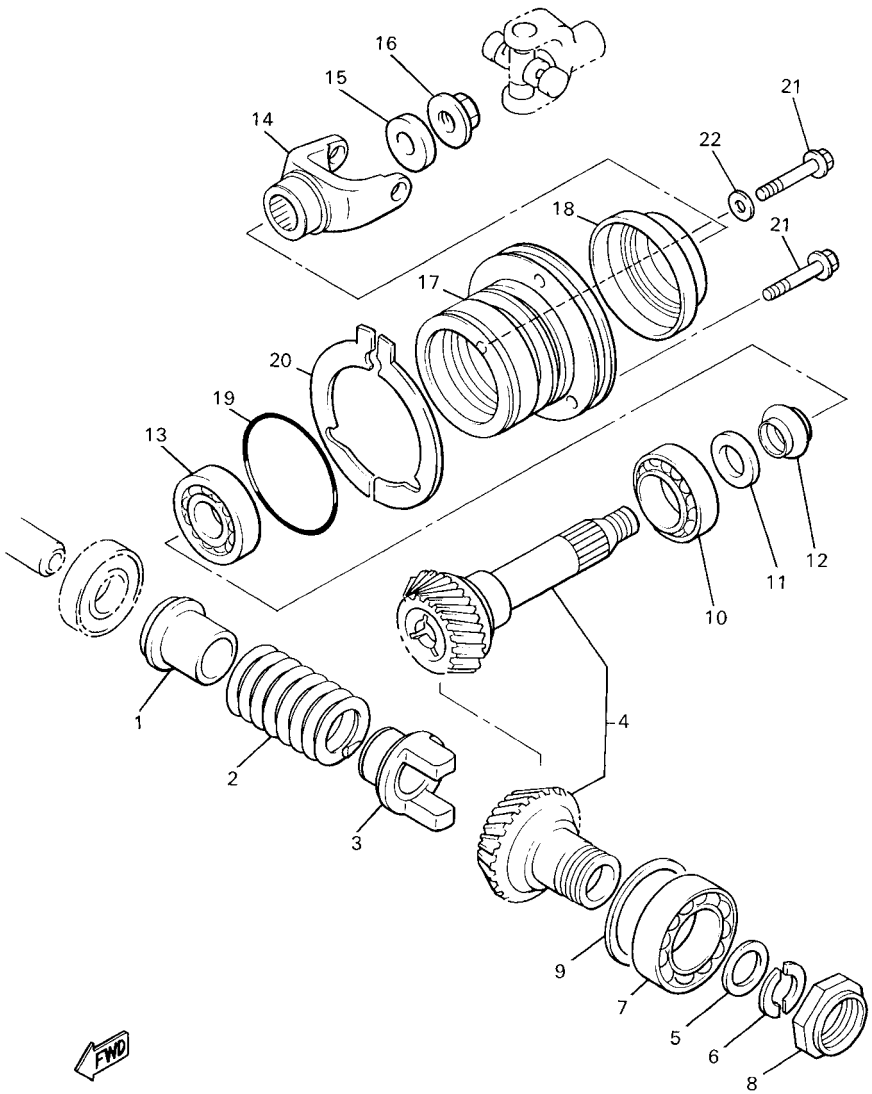

FIG. 18 MIDDLE DRIVE GEAR

REF. NO.	PART NO.	DESCRIPTION	1D6S	1D6T				REMARKS
20	3UF–17531–50	SHIM, PINION (0.50T)	2	2				UR
21	95827–08030	BOLT, FLANGE	3	3				
22	90201–08676	WASHER, PLATE	1	1				

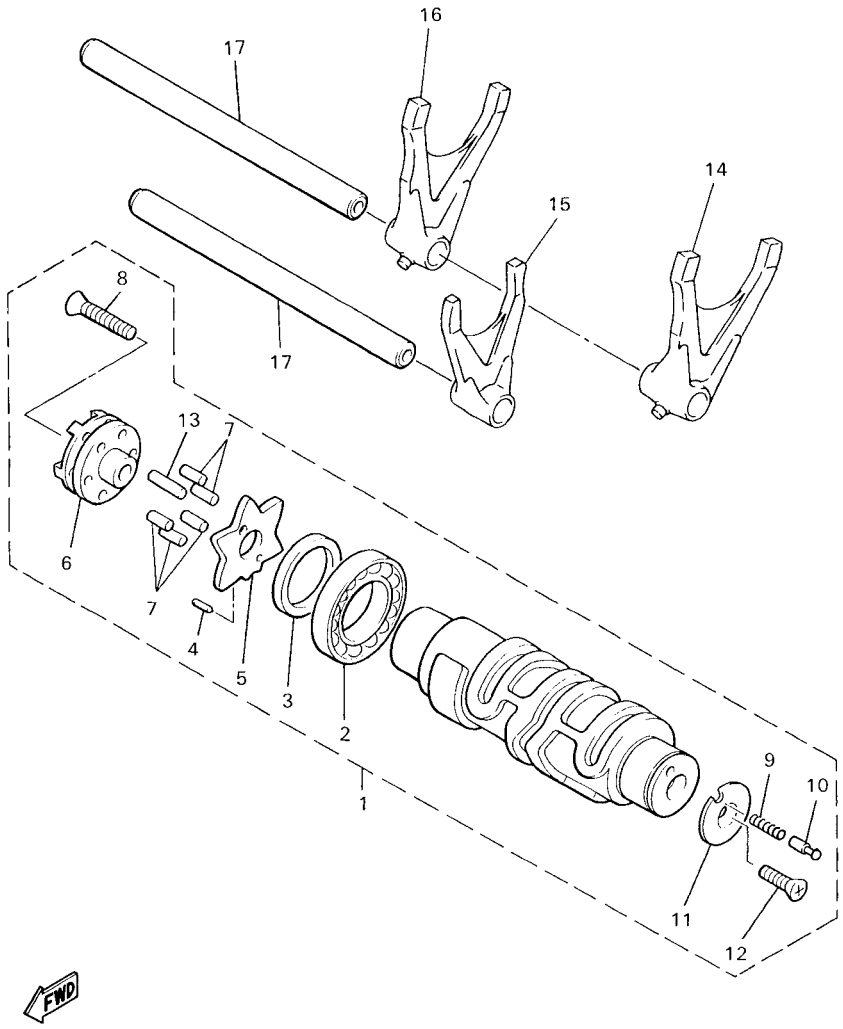

4NK7100-8190

FIG. 19 SHIFT CAM & FORK

REF. NO.	PART NO.	DESCRIPTION	1D6S	1D6T				REMARKS
1	4NK–18540–03	SHIFT CAM ASSY	1	1				
2	93306–90602	.BEARING	1	1				
3	90560–30234	.SPACER	1	1				
4	93603–10049	.PIN, DOWEL	1	1				
5	4NK–18141–00	.PLATE, STOPPER	1	1				
6	4NK–18185–00	.SEGMENT	1	1				
7	93604–12037	.PIN, DOWEL	5	5				
8	90151–06013	.SCREW, COUNTERSUNK	1	1				
9	90501–06022	.SPRING, COMPRESSION	1	1				
10	4UN–18542–00	.POINT, NEUTRAL	1	1				
11	4UN–18566–00	.PLATE, SIDE 2	1	1				
12	90149–05321	.SCREW	1	1				
13	93604–16092	.PIN, DOWEL	1	1				
14	4NK–18511–00	FORK, SHIFT 1	1	1				
15	4NK–18512–00	FORK, SHIFT 2	1	1				
16	4NK–18513–00	FORK, SHIFT 3	1	1				
17	4NK–18531–00	BAR, SHIFT FORK GUIDE 1	2	2				

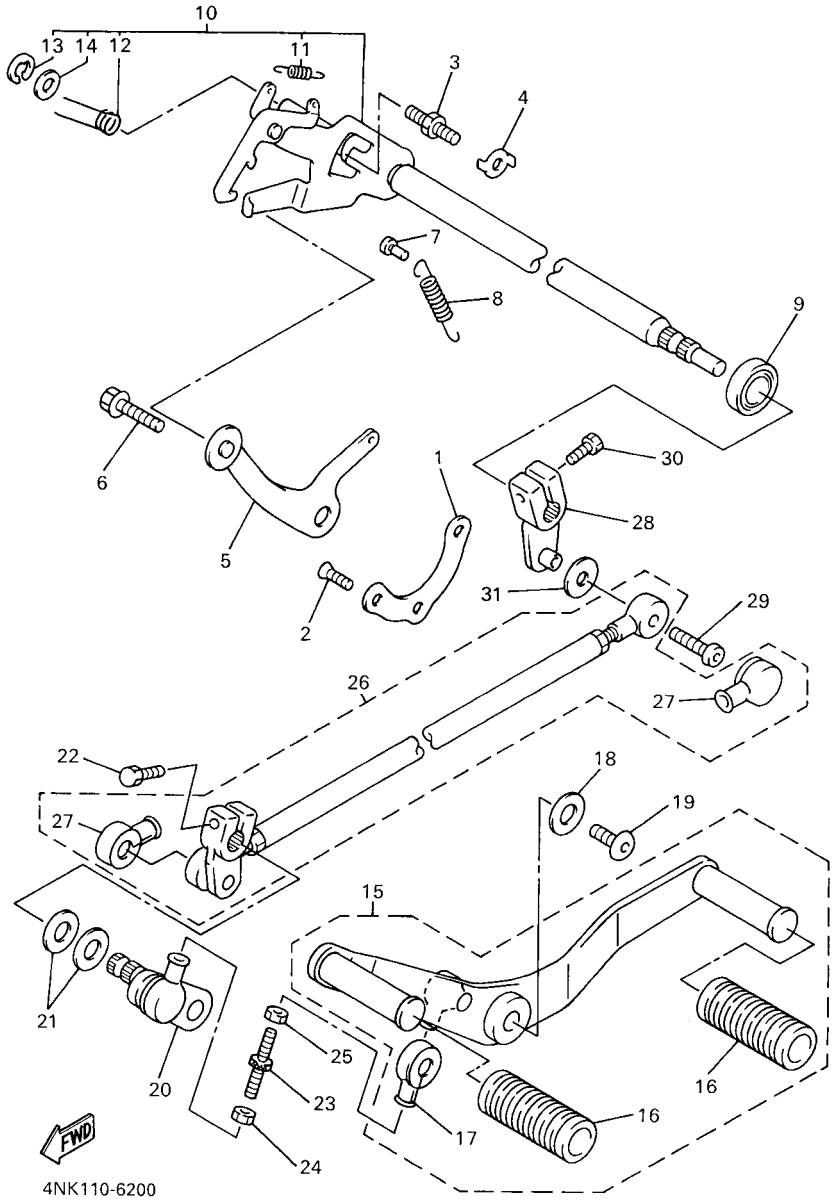

FIG. 20 SHIFT SHAFT

REF. NO.	PART NO.	DESCRIPTION	1D6S	1D6T				REMARKS
1	26H–18536–00	STOPPER, SHIFT BAR	1	1				
2	90151–06041	SCREW, COUNTERSUNK	3	3				
3	90109–08050	BOLT	1	1				
4	90215–08115	WASHER, LOCK	1	1				
5	26H–18140–02	STOPPER LEVER ASSY	1	1				
6	90109–063F8	BOLT	1	1				
7	132–16346–00	HOOK, SPRING	1	1				
8	90507–14064	SPRING, TENSION	1	1				
9	93102–14209	OIL SEAL	1	1				
10	4NK–18101–01	SHIFT SHAFT ASSY	1	1				
11	90506–08227	.SPRING, TENSION	1	1				
12	90508–32588	.SPRING, TORSION	1	1				
13	99001–10600	.CIRCLIP	1	1				
14	90201–127E1	.WASHER, PLATE	1	1				
15	4XY–18110–00	SHIFT PEDAL ASSY	1	1				
16	4NK–18113–10	.COVER, SHIFT PEDAL	2	2				
17	2H9–18154–00	.COVER, DUST	1	1				
18	90201–06070	WASHER, PLATE	1	1				
19	90149–06280	SCREW	1	1				
20	4NK–18197–01	SHAFT	1	1				
21	90201–12688	WASHER, PLATE	2	2				
22	97024–06020	BOLT	1	1				
23	4NK–18115–00	ROD, SHIFT	1	1				
24	95304–06700	NUT	1	1				
25	90170–06228	NUT(COUNTER CLOCKWISE)	1	1				
26	4NK–18150–02	SHIFT LEVER ASSY	1	1				
27	2H9–18154–00	.COVER, DUST	2	2				

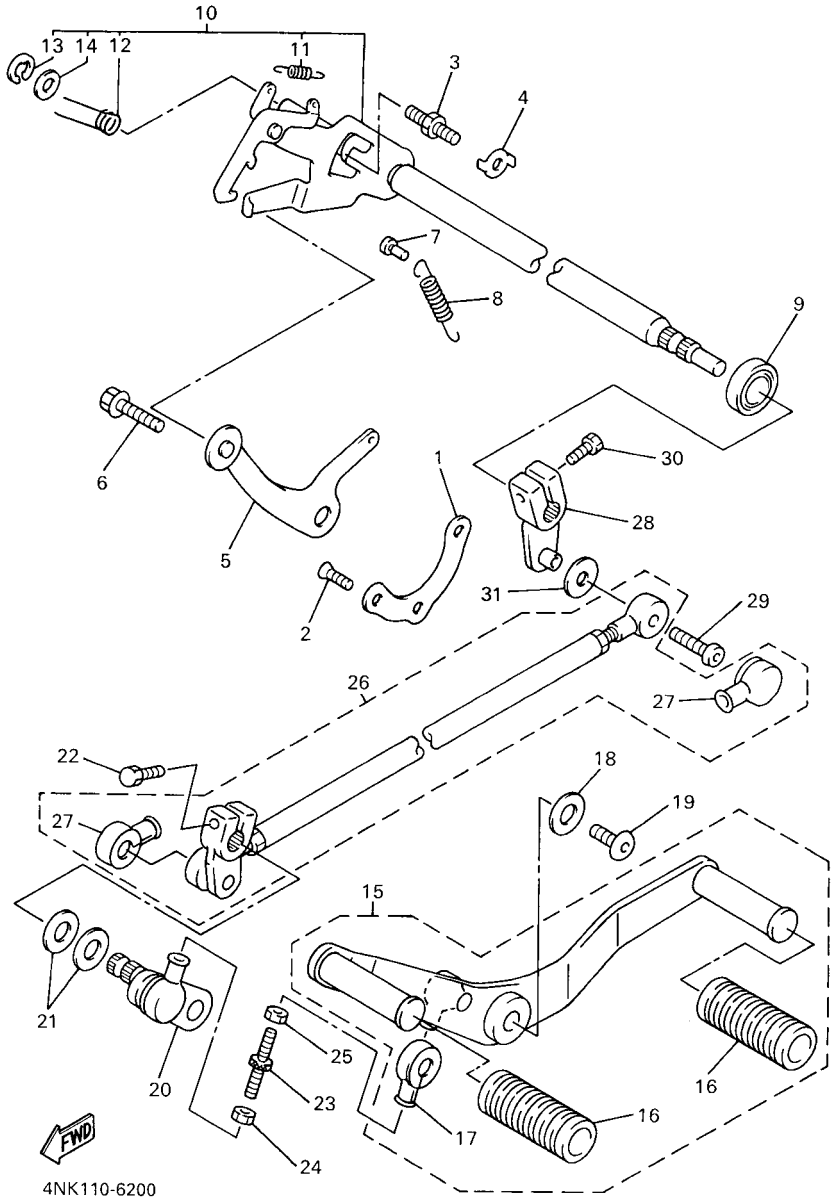

FIG. 20 SHIFT SHAFT

REF. NO.	PART NO.	DESCRIPTION	1D6S	1D6T				REMARKS
28	4NK–18151–01	LEVER, SHIFT 3	1	1				
29	90149–06229	SCREW	1	1				
30	97027–06020	BOLT, HEXAGON	1	1				
31	90201–06589	WASHER, PLATE	1	1				

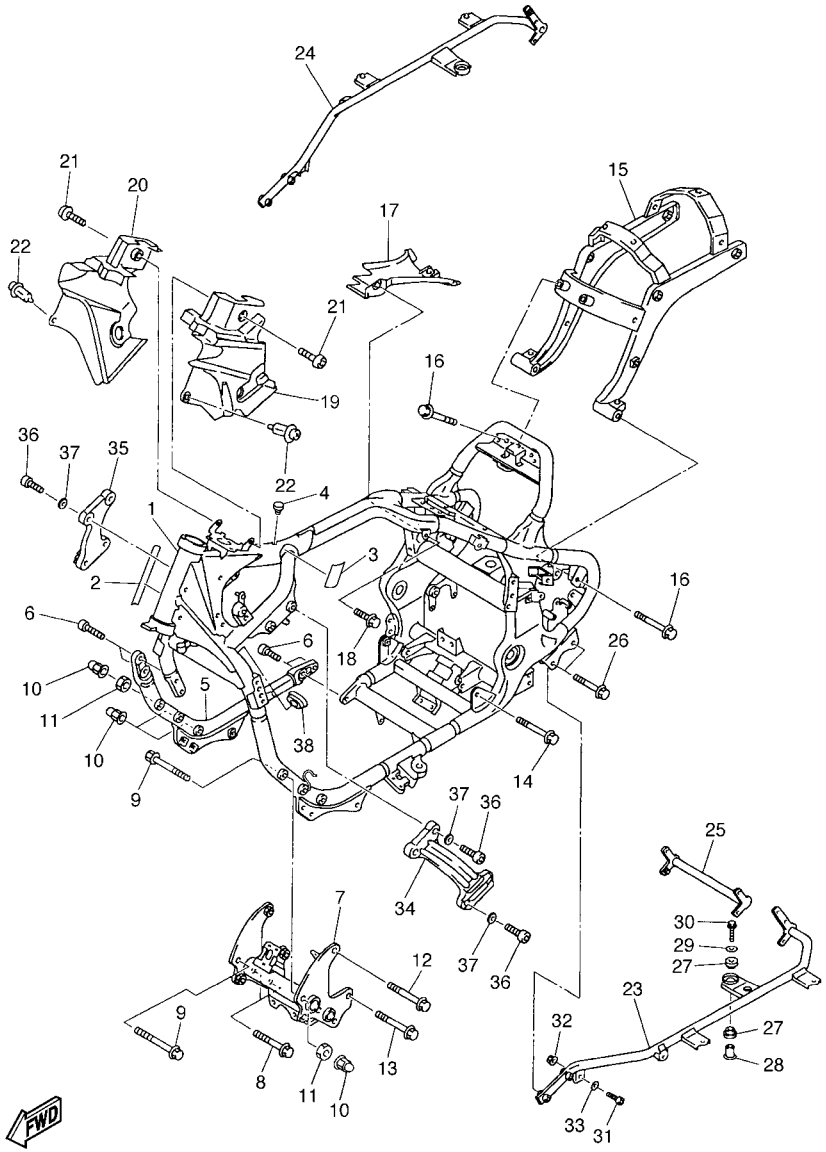

FIG. 21 FRAME

REF. NO.	PART NO.	DESCRIPTION	1D6S	1D6T				REMARKS
1	1D6–21110–00	FRAME COMP.	1	1				
2	3HA–24141–00	PROTECTOR, FUEL TANK	1	1				
3	2AL–84553–00	DAMPER	1	1				
4	90338–07124	PLUG	1	1				
5	4XY–21150–00–33	DOWN TUBE COMP.2	1	1				YB
6	90110–10161	BOLT, HEXAGON SOCKET HEAD	4	4				
7	4XY–2141V–01	CROSS BAR COMPLETE	1	1				
8	95827–10070	BOLT, FLANGE	4	4				
9	95827–10080	BOLT, FLANGE	2	2				
10	90176–10075	NUT, CROWN	6	6				
11	90170–10206	NUT	2	2				
12	90105–10788	BOLT, FLANGE	2	2				
13	90105–10788	BOLT, FLANGE	2	2				
14	90105–12252	BOLT, FLANGE	2	2				
15	4XY–21190–02	REAR FRAME COMP.	1	1				
16	95827–10035	BOLT, FLANGE	4	4				
17	4XY–2117M–00	COVER 2	1	1				
18	90119–06236	BOLT, WITH WASHER	1	1				
19	4XY–2171E–00	COVER, SIDE 5	1	1				
20	4XY–2171X–00	COVER, SIDE 6	1	1				
21	90154–05013	SCREW, BINDING	2	2				
22	90269–06083	RIVET	2	2				
23	4XY–21445–00	STAY, MUFFLER 1	1	1				
24	4XY–21446–00	STAY, MUFFLER 2	1	1				
25	4YE–2144F–01	STAY, MUFFLER 3	1	1				
26	90105–08310	BOLT, FLANGE	4	4				
27	36Y–14747–00	DAMPER, MUFFLER	4	4				

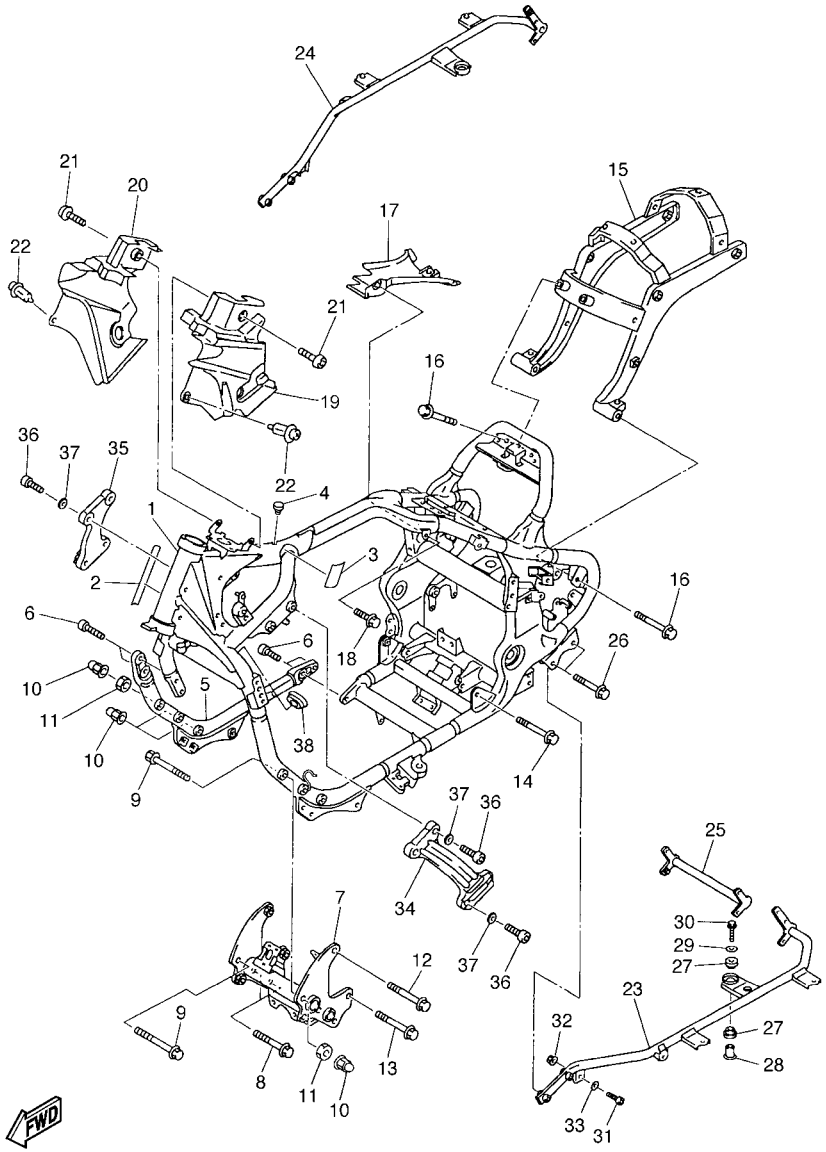

FIG. 21 FRAME

REF. NO.	PART NO.	DESCRIPTION	1D6S	1D6T				REMARKS
28	4G0–14638–00	COLLAR	2	2				
29	90201–10669	WASHER, PLATE	2	2				
30	95807–10040	BOLT, FLANGE	2	2				
31	91317–08035	BOLT	2	2				
32	95607–08200	NUT, SELF-LOCKING	2	2				
33	90201–08326	WASHER, PLATE	2	2				
34	4XY–21315–20	STAY, ENGINE 2	1	1				
35	4XY–21316–20	STAY, ENGINE 3	1	1				
36	91314–10035	BOLT, HEXAGON SOCKET HEAD	8	8				
37	92990–10600	WASHER, PLATE	8	8				
38	90480–01141	GROMMET	1	1				

FIG. 22 FENDER

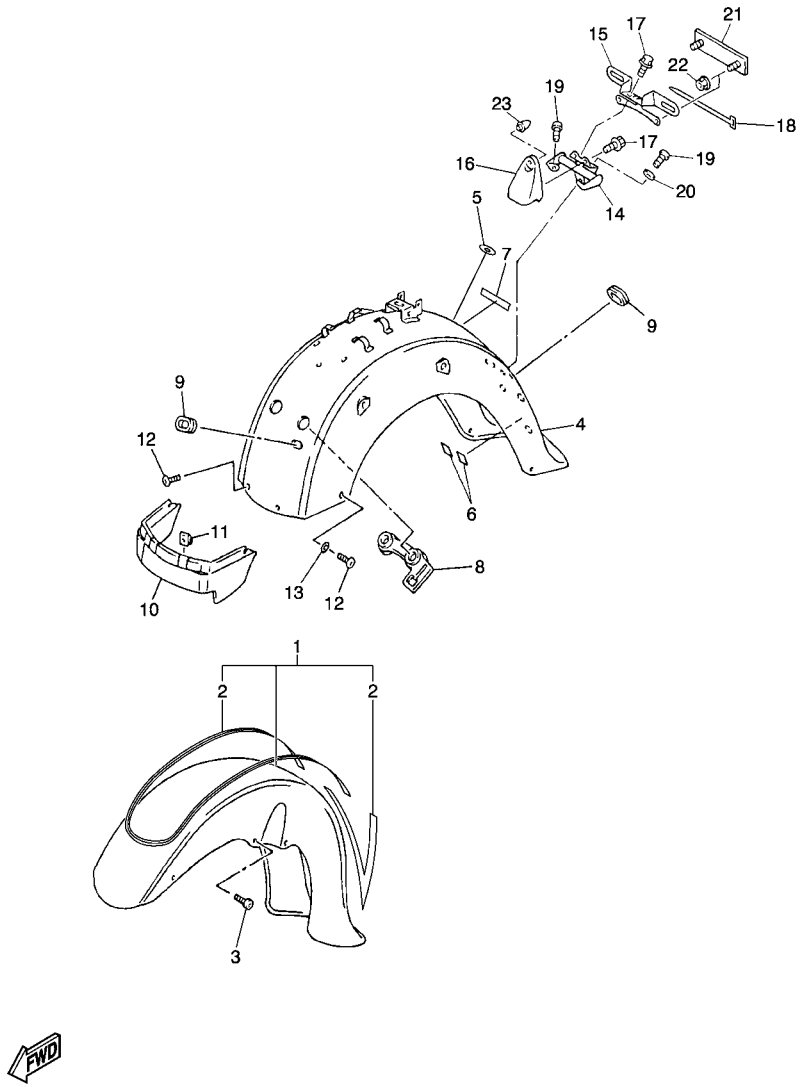

1D6A100-F230

REF. NO.	PART NO.	DESCRIPTION	1D6S	1D6T				REMARKS
1	4NK–Y2150–S0–6Y	FRONT FENDER ASSY	1	1				DBNM8/SMX
2	1D6–21570–70	.GRAPHIC SET, FRONT FENDER	1	1				
3	91314–08025	BOLT, HEXAGON SOCKET HEAD	4	4				
4	5EJ–21610–00–P4	REAR FENDER COMP.	1	1				DBNM8
5	4NK–21735–00	SEAL 2	1	1				
6	3MA–27491–00	PROTECTOR	2	2				
7	1D6–2153E–00	EMBLEM, YAMAHA	1	1				
8	4NK–21649–00	DAMPER	1	1				
9	90480–15061	GROMMET	3	3				
10	4NK–21621–00–PA	FLAP	1	1				DBNM8
11	90183–06053	NUT, SPRING	2	2				
12	90110–06200	BOLT, HEXAGON SOCKET HEAD	4	4				
13	90202–06170	WASHER, PLATE	2	2				
14	4XY–2317W–00	STAY, 9	1	1				
15	5BN–84751–00	BRACKET, LICENSE	1	1				
16	1D6–84703–00	BRACKET	1	1				
17	95027–06010	BOLT, FLANGE	4	4				
18	90464–25002	CLAMP	1	1				
19	95024–06012	BOLT, FLANGE	3	3				
20	90201–06043	WASHER, PLATE	1	1				
21	1FK–85130–00	REAR REFLECTOR ASSY	1	1				
22	95707–05500	NUT, FLANGE	2	2				
23	42U–21639–00	DAMPER 2	1	1				

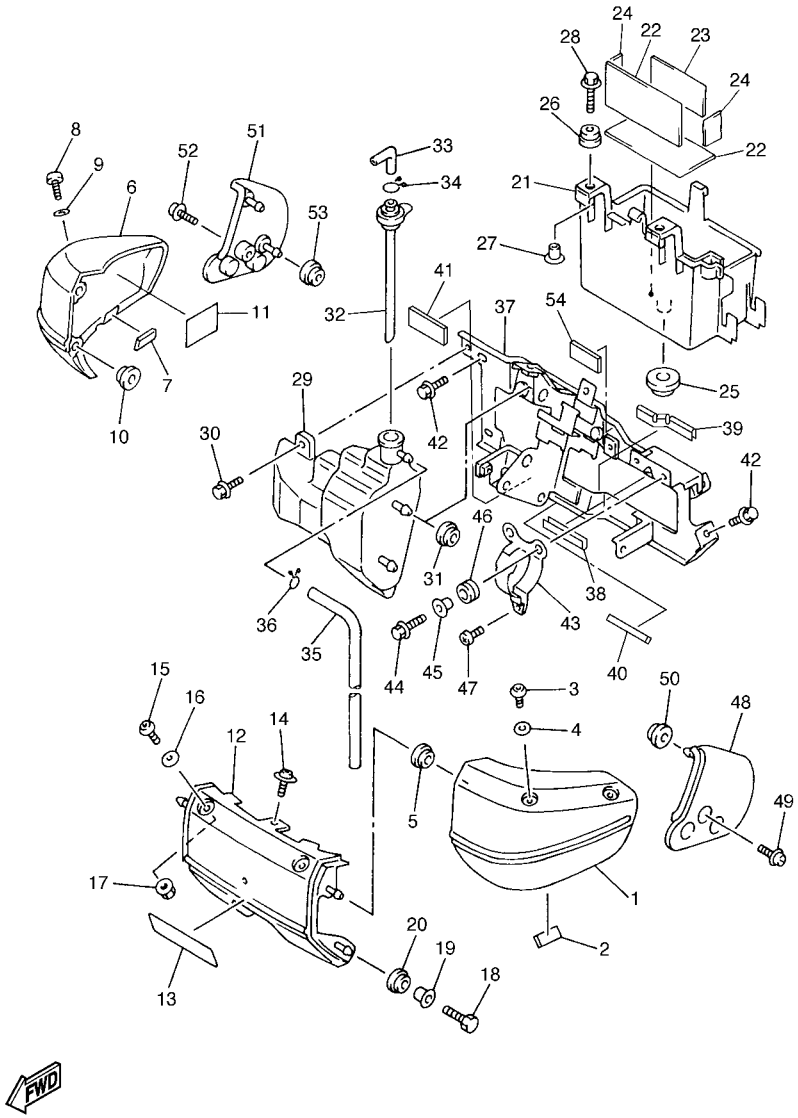

FIG. 23 SIDE COVER

REF. NO.	PART NO.	DESCRIPTION	1D6S	1D6T				REMARKS
1	4NK–21711–00–P9	COVER, SIDE 1	1	1				SMX
2	51Y–21639–00	DAMPER 2	1	1				
3	90149–06298	SCREW	2	2				
4	90202–06172	WASHER, PLATE	2	2				
5	90480–13567	GROMMET	2	2				
6	4NK–21721–00–P9	COVER, SIDE 2	1	1				SMX
7	51Y–21639–00	DAMPER 2	1	1				
8	90149–06298	SCREW	2	2				
9	90202–06172	WASHER, PLATE	2	2				
10	90480–13567	GROMMET	2	2				
11	1JK–21735–00	SEAL 2	1	1				
12	4XY–2117X–00–P9	COVER 9	1	1				SMX
13	52W–2117G–00	PROTECTOR	1	1				
14	90159–06033	SCREW, WITH WASHER	1	1				
15	90149–06298	SCREW	2	2				
16	90202–06172	WASHER, PLATE	2	2				
17	95707–06500	NUT, FLANGE	2	2				
18	97007–06020	BOLT	2	2				
19	90387–067N5	COLLAR	2	2				
20	90480–13398	GROMMET	2	2				
21	4NK–2177G–00	BOX, BATTERY	1	1				
22	3Y6–21747–00	DAMPER	2	2				
23	5EJ–2414H–00	DAMPER, PLATE 1	1	1				
24	22F–2139X–00	DAMPER	2	2				
25	90480–20384	GROMMET	1	1				
26	90480–13398	GROMMET	2	2				
27	90387–067N5	COLLAR	2	2				

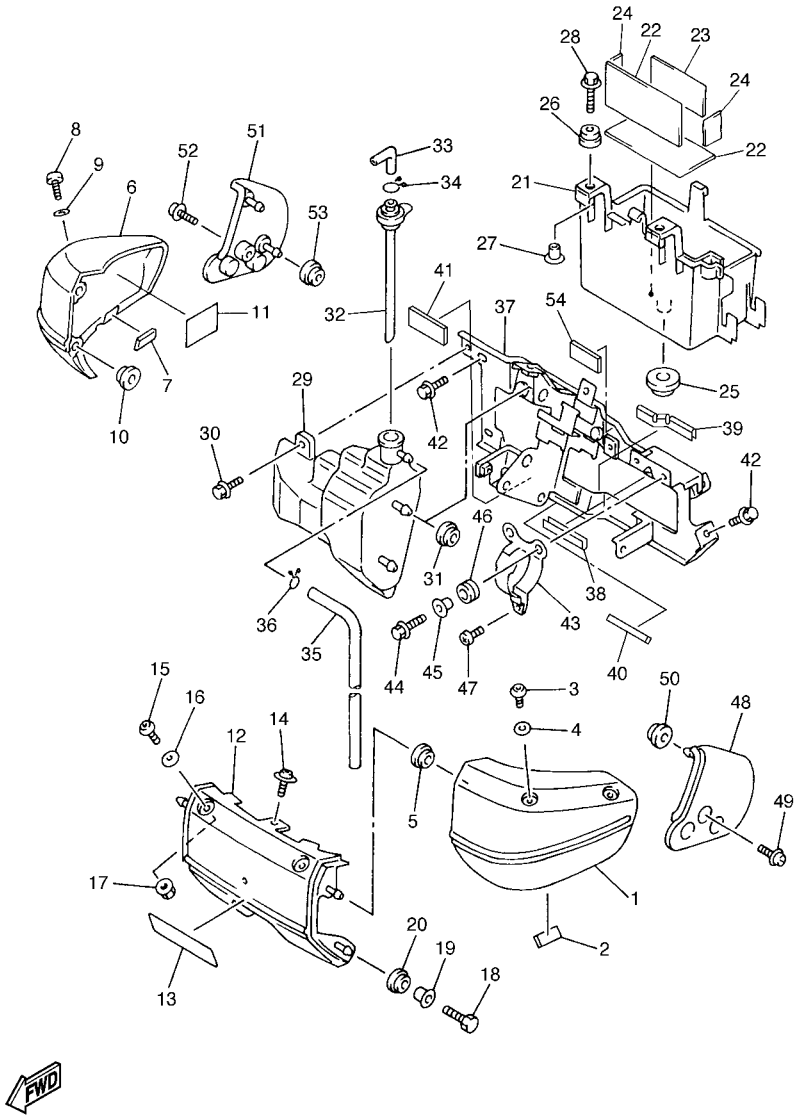

FIG. 23 SIDE COVER

REF. NO.	PART NO.	DESCRIPTION	1D6S	1D6T				REMARKS
28	90119–06096	BOLT, WITH WASHER	2	2				
29	4NK–21871–00	TANK, RECOVERY	1	1				
30	90119–06044	BOLT, WITH WASHER	1	1				
31	90480–13567	GROMMET	2	2				
32	4NK–21875–00	CAP	1	1				
33	26H–21828–00	ELBOW	1	1				
34	90467–11019	CLIP	1	1				
35	90445–09117	HOSE (L540)	1	1				
36	90467–09006	CLIP	1	1				
37	4NK–21243–01	PLATE, BRIDGE	1	1				
38	4KB–21268–00	SEAL	1	1				
39	1D6–21268–00	SEAL	1	1				
40	46X–21269–00	SEAL	1	1				
41	4U5–2317J–00	DAMPER 1	1	1				
42	95807–06010	BOLT, FLANGE	4	4				
43	3CV–24491–10	BRACKET, FUEL PUMP	1	1				
44	95817–06016	BOLT, FLANGE	2	2				
45	90387–062L2	COLLAR	2	2				
46	90480–13163	GROMMET	2	2				
47	98907–05010	SCREW, BIND	1	1				
48	4NK–21731–00	COVER, SIDE 3	1	1				
49	90159–06033	SCREW, WITH WASHER	1	1				
50	90480–13567	GROMMET	2	2				
51	4NK–21741–00	COVER, SIDE 4	1	1				
52	90159–06033	SCREW, WITH WASHER	1	1				
53	90480–13567	GROMMET	2	2				
54	4U5–2317J–00	DAMPER 1	1	1				

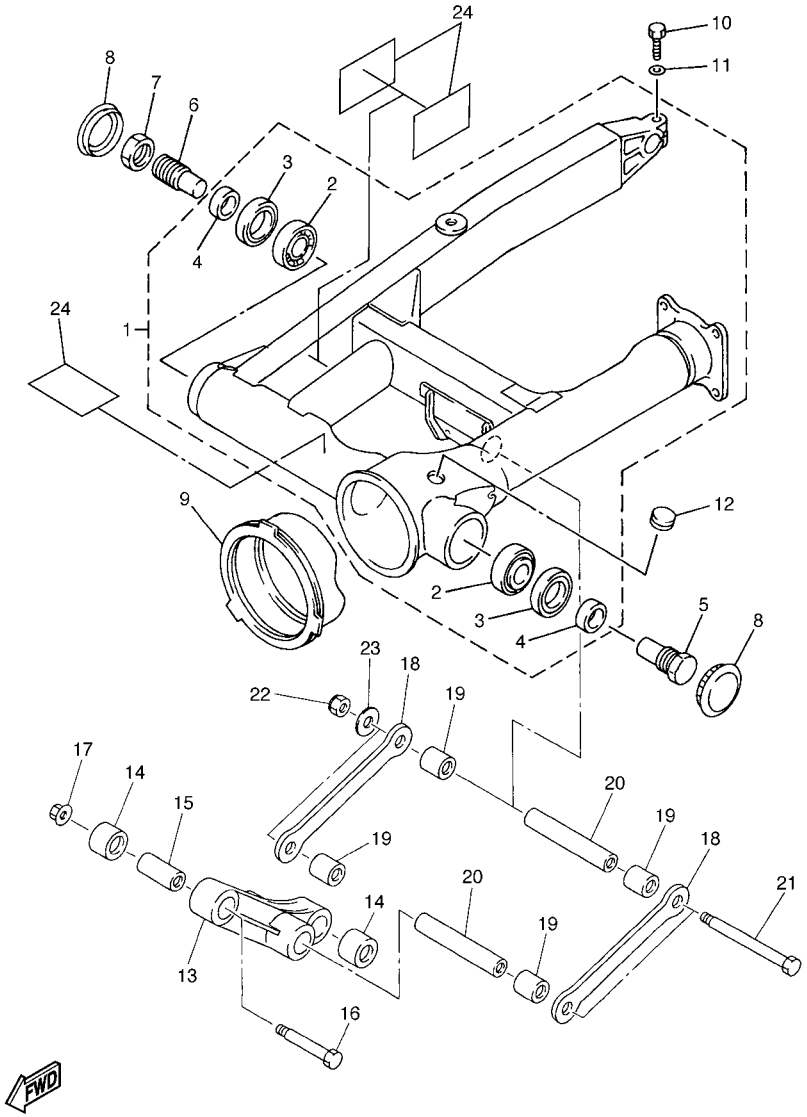

1D61100-D250

FIG. 24 REAR ARM

REF. NO.	PART NO.	DESCRIPTION	1D6S	1D6T				REMARKS
1	1D6–W2211–00	REAR ARM COMP.	1	1				
2	93332–00050	.BEARING	2	2				UR SNK
	93332–00051	.BEARING	2	2				UR KOYO
3	93106–28023	.OIL SEAL	2	2				
4	90387–204H5	.COLLAR	2	2				
5	4NK–2214H–00	SHAFT, PIVOT 2	1	1				
6	4NK–22141–00	SHAFT, PIVOT	1	1				
7	26H–22143–00	NUT	1	1				
8	2H7–2219X–00	COVER	2	2				
9	26H–22189–00	BOOT, RUBBER	1	1				
10	97024–08025	BOLT	1	1				
11	92904–08600	WASHER	1	1				
12	90338–20113	PLUG	1	1				
13	4XY–2217A–00	ARM, RELAY	1	1				
14	93317–42060	BEARING	2	2				
15	90387–122J6	COLLAR	1	1				
16	90109–104E4	BOLT	1	1				
17	95607–10200	NUT, U FLANGE	1	1				
18	4XY–2217M–00	ARM 1	2	2				
19	93317–41761	BEARING	4	4				
20	90387–126T1	COLLAR	2	2				
21	90101–12673	BOLT	2	2				
22	90185–12119	NUT, SELF-LOCKING	2	2				
23	90201–126A7	WASHER, PLATE	2	2				
24	1D6–22358–00	SEAL 1	3	3				

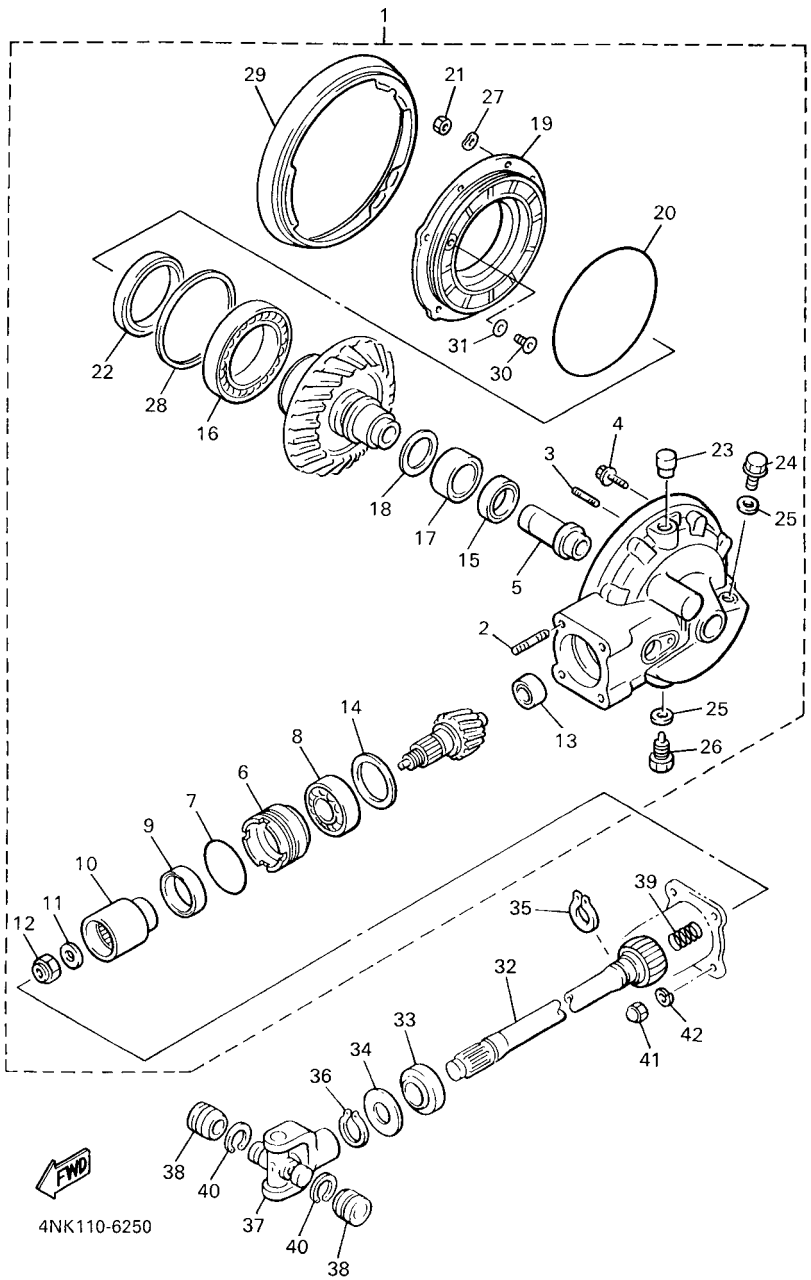

FIG. 25 DRIVE SHAFT

REF. NO.	PART NO.	DESCRIPTION	1D6S	1D6T				REMARKS
1	4XY–46101–00	REAR AXLE GEAR CASE ASSY	1	1				
2	90116–10593	.BOLT, STUD	4	4				
3	90116–08427	.BOLT, STUD	6	6				
4	95817–10050	.BOLT, FLANGE	2	2				
5	4YE–46153–00	.COLLAR, GUIDE	1	1				
6	4H7–46125–00	.RETAINER, BEARING	1	1				
7	93210–60426	.O-RING	1	1				
8	93306–30533	.BEARING	1	1				
9	93101–38098	.OIL SEAL	1	1				
10	4H7–46123–01	.COUPLING, GEAR	1	1				
11	90201–166R5	.WASHER, PLATE	1	1				
12	90179–16661	.NUT	1	1				
13	2H7–46102–00	.BEARING ASSY	1	1				
14	1J7–17537–Y0–30	.SHIM, THRUST (0.30T)	1	1				UR
	1J7–17537–Y0–40	.SHIM, THRUST (0.40T)	1	1				UR
	1J7–17537–Y0–50	.SHIM, THRUST (0.50T)	1	1				UR
15	93101–30084	.OIL SEAL	1	1				
16	93316–01403	.BEARING	1	1				
17	93311–43729	.BEARING	1	1				
18	22U–46118–00–12	.SHIM, THRUST (1.2T)	1	1				UR
	22U–46118–00–14	.SHIM, THRUST (1.4T)	1	1				UR
	22U–46118–00–16	.SHIM, THRUST (1.6T)	1	1				UR
	22U–46118–00–18	.SHIM, THRUST (1.8T)	1	1				UR
	22U–46118–00–20	.SHIM, THRUST (2.0T)	1	1				UR
19	1FK–46152–01	.HOUSING, BEARING	1	1				
20	93211–54698	.O-RING	1	1				
21	95317–08600	.NUT	6	6				

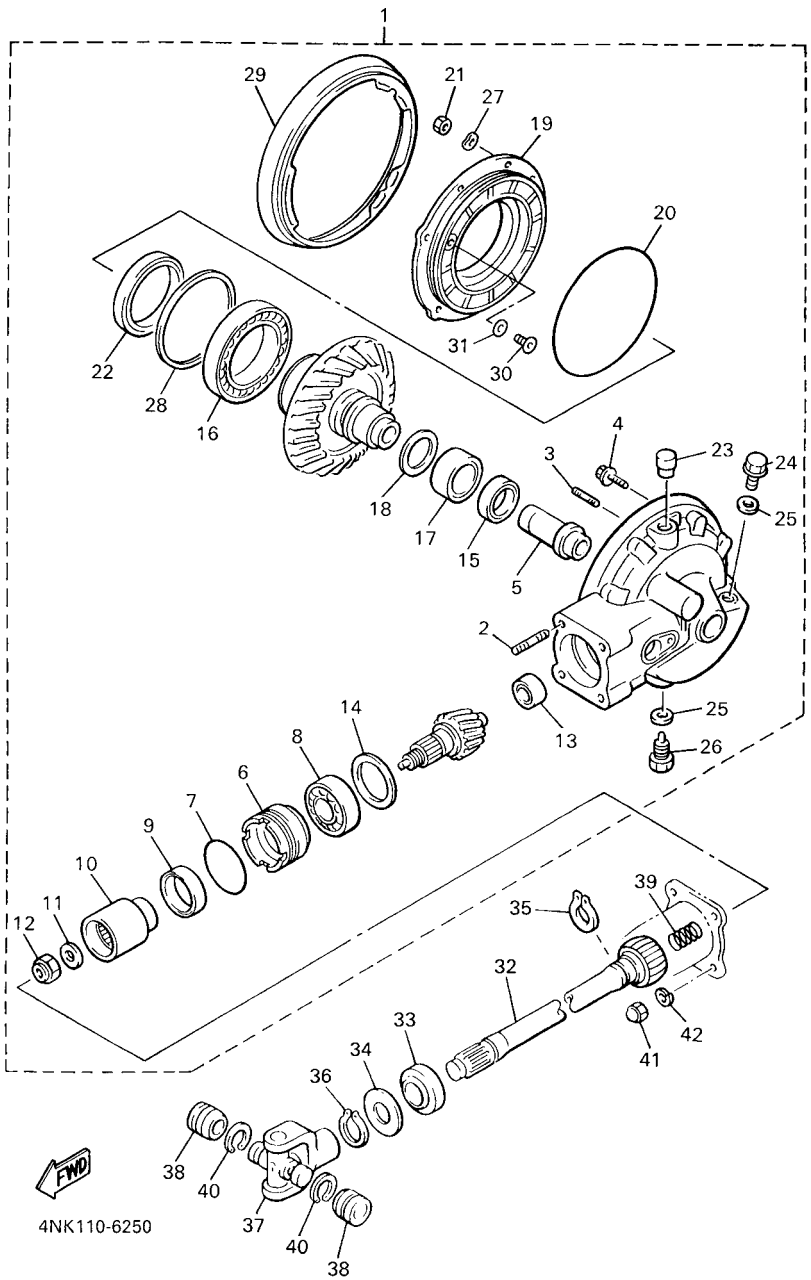

FIG. 25 DRIVE SHAFT

REF. NO.	PART NO.	DESCRIPTION	1D6S	1D6T				REMARKS
22	93102–70167	.OIL SEAL	1	1				
23	56W–17590–00	.BREATHER COMP.	1	1				
24	90340–14132	.PLUG, STRAIGHT SCREW	1	1				
25	214–11198–01	.GASKET	2	2				
26	90340–14135	.PLUG, STRAIGHT SCREW	1	1				
27	92907–08700	.WASHER	6	6				
28	1J7–46117–Y0–25	.SHIM, RING GEAR (0.25T)	1	1				UR
	1J7–46117–Y0–30	.SHIM, RING GEAR (0.30T)	1	1				UR
	1J7–46117–Y0–40	.SHIM, RING GEAR (0.40T)	1	1				UR
	1J7–46117–Y0–50	.SHIM, RING GEAR (0.50T)	1	1				UR
29	1FK–46154–00	.COVER, HOUSING	1	1				
30	1FK–46156–00	.STOPPER, RING GEAR	1	1				
31	1FK–46157–00–15	.SHIM, STOPPER (T=0.15)	1	1				UR
	1FK–46157–00–20	.SHIM, STOPPER (T=0.20)	1	1				UR
32	4XY–46172–00	SHAFT, DRIVE	1	1				
33	93108–43013	OIL SEAL	1	1				
34	90201–231A2	WASHER, PLATE	1	1				
35	93410–23056	CIRCLIP	1	1				
36	93410–22039	CIRCLIP	1	1				
37	4X7–46180–00	CROSS JOINT COMP.	1	1				
38	93311–21044	BEARING	2	2				
39	90501–16491	SPRING, COMPRESSION	1	1				
40	93440–20088	CIRCLIP	2	2				
41	90176–10075	NUT, CROWN	4	4				
42	92903–10100	WASHER, SPRING	4	4				

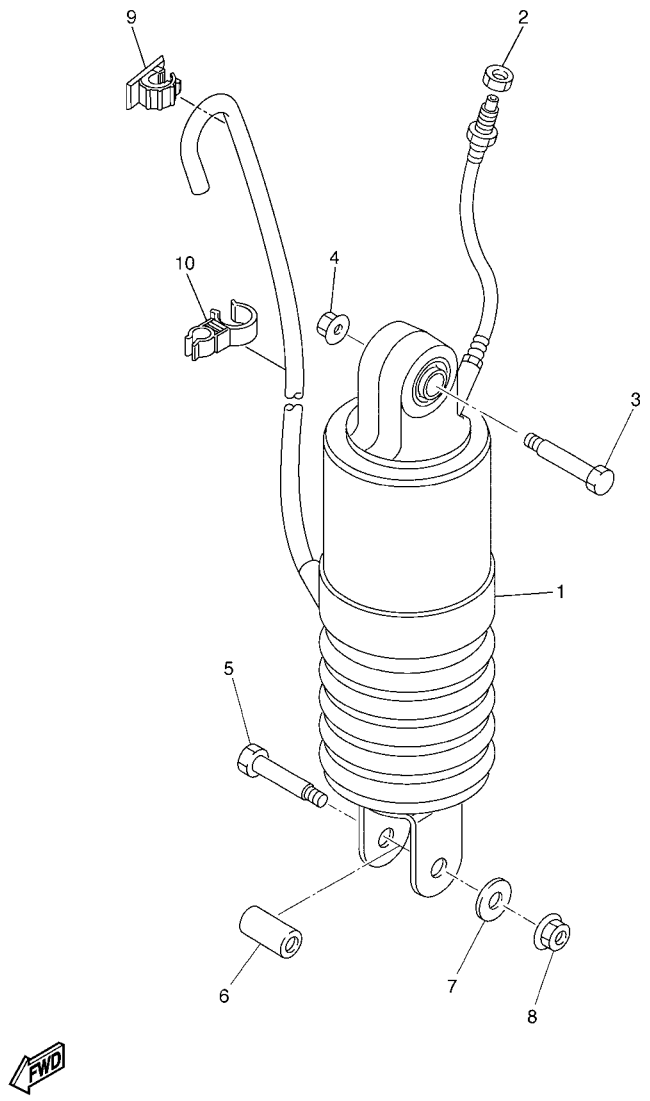

FIG. 26 REAR SUSPENSION

REF. NO.	PART NO.	DESCRIPTION	1D6S	1D6T				REMARKS
1	1D6–22210–00	SHOCK ABSORBER ASSY, REAR	1	1				
2	90170–14350	NUT	1	1				
3	90101–12498	BOLT	1	1				
4	95607–12200	NUT, SELF-LOCKING	1	1				
5	90101–12498	BOLT	1	1				
6	90387–126W4	COLLAR	1	1				
7	90201–126A7	WASHER, PLATE	1	1				
8	95607–12200	NUT, SELF-LOCKING	1	1				
9	90464–13005	CLAMP	1	1				
10	90464–12008	CLAMP	1	1				

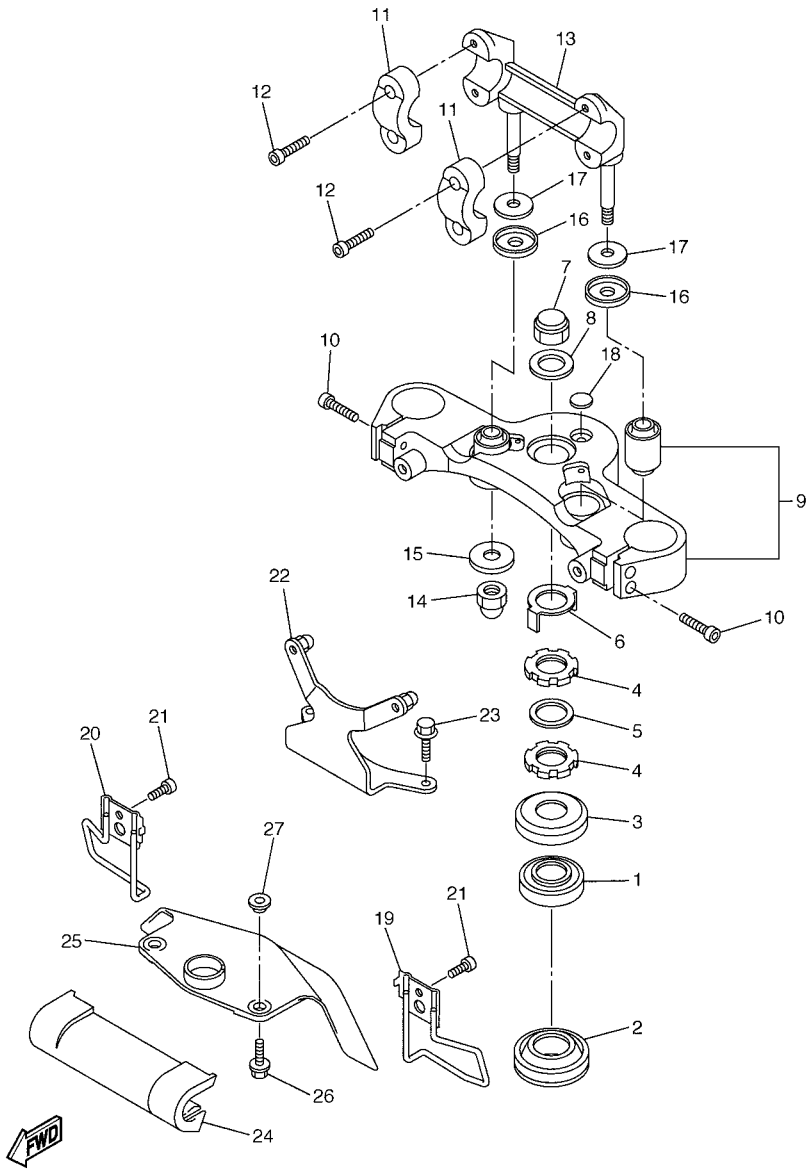

1D61100-D280

FIG. 27 STEERING

REF. NO.	PART NO.	DESCRIPTION	1D6S	1D6T				REMARKS
1	93332–00001	BEARING	1	1				
2	93332–00008	BEARING	1	1				
3	1W1–23416–00	COVER, BALL RACE 2	1	1				
4	90179–25033	NUT	2	2				
5	90202–26142	WASHER, PLATE	1	1				
6	26H–23418–01	WASHER, SPECIAL	1	1				
7	90176–22081	NUT, CROWN	1	1				
8	90201–220T0	WASHER, PLATE	1	1				
9	1D6–W2341–10	CROWN, HANDLE	1	1				
10	91314–06030	BOLT, HEXAGON SOCKET HEAD	4	4				
11	1D6–23441–00	HOLDER, HANDLE UPPER	2	2				
12	91314–08025	BOLT, HEXAGON SOCKET HEAD	4	4				
13	1D6–23442–00	HOLDER, HANDLE LOWER	1	1				
14	90176–12052	NUT, CROWN	2	2				
15	90201–12015	WASHER, PLATE	2	2				
16	3DM–23445–00	DAMPER	2	2				
17	90201–14220	WASHER, PLATE	2	2				
18	4XV–2341B–00	EMBLEM	1	1				
19	1D6–2331E–00	GUIDE, CABLE	1	1				
20	1D6–23389–00	GUIDE, CABLE	1	1				
21	91317–06012	BOLT	2	2				
22	1D6–23174–00	STAY, HEADLIGHT	1	1				
23	90105–06010	BOLT, FLANGE	2	2				
24	4NK–23122–01	COVER, OUTER 1	1	1				
25	4XY–23818–00	COVER, STEERING	1	1				
26	90159–06016	SCREW, WITH WASHER	2	2				
27	90387–06681	COLLAR	2	2				

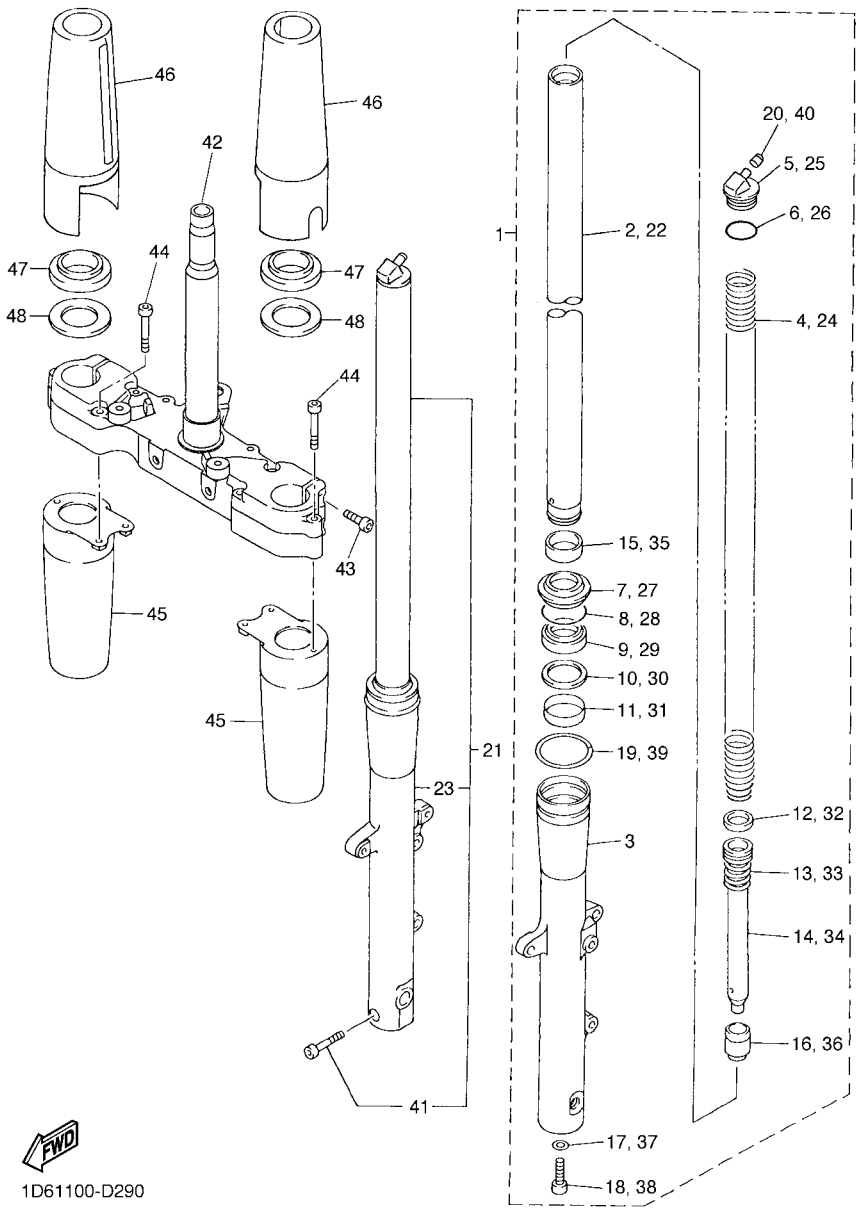

FIG. 28 FRONT FORK

REF. NO.	PART NO.	DESCRIPTION	1D6S	1D6T				REMARKS
1	1D6–23102–10	FRONT FORK ASSY (L.H)	1	1				
2	4XY–23110–00	.INNER TUBE COMP.1	1	1				
3	5MB–23126–00	.TUBE, OUTER (LEFT)	1	1				
4	1D6–23141–00	.SPRING, FRONT FORK	1	1				
5	4XY–23111–00	.BOLT, CAP	1	1				
6	4NK–23147–00	.O-RING	1	1				
7	4NK–23144–00	.SEAL, DUST	1	1				
8	34L–23153–00	.RING, SNAP	1	1				
9	4NK–23145–00	.OIL SEAL	1	1				
10	4NK–23146–00	.WASHER, OIL SEAL	1	1				
11	4NK–23125–00	.METAL, SLIDE 1	1	1				
12	4NK–23157–00	.RING, PISTON	1	1				
13	4NK–23151–00	.SPRING, REBOUND	1	1				
14	4WM–23171–00	.PISTON, FRONT FORK	1	1				
15	4NK–23135–00	.METAL, SLIDE 2	1	1				
16	4WM–23166–00	.SPACER, OIL LOCK	1	1				
17	3MA–23129–10	.GASKET, DRAIN PLUG	1	1				
18	4NK–23181–00	.BOLT, HEXAGON SOCKET HEAD	1	1				
19	4NK–23193–00	.GUIDE, BOOT	1	1				
20	4V1–23184–L0	.CAP, AIR VALVE	1	1				
21	1D6–23103–10	FRONT FORK ASSY (R.H)	1	1				
22	4XY–23110–00	.INNER TUBE COMP.1	1	1				
23	5MB–23136–00	.TUBE, OUTER (RIGHT)	1	1				
24	1D6–23141–00	.SPRING, FRONT FORK	1	1				
25	4XY–23111–00	.BOLT, CAP	1	1				
26	4NK–23147–00	.O-RING	1	1				
27	4NK–23144–00	.SEAL, DUST	1	1				

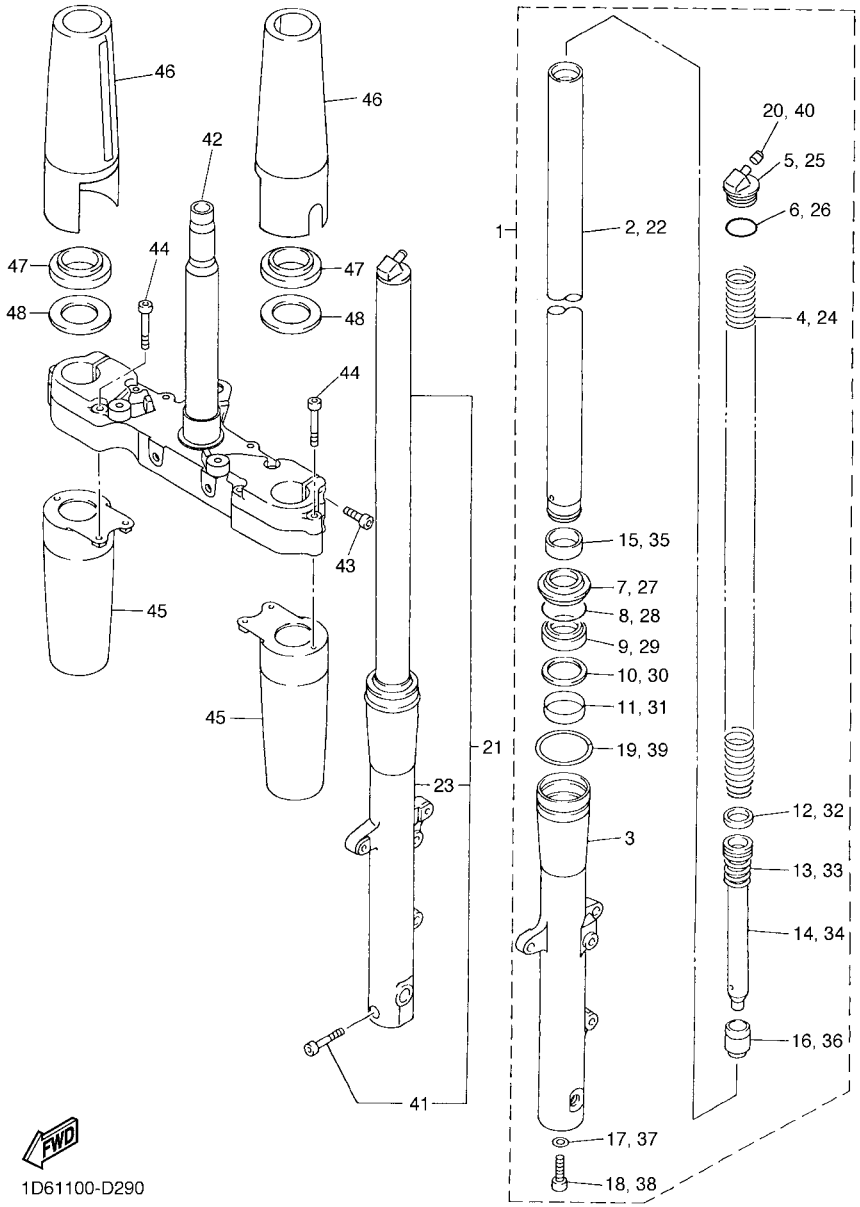

FIG. 28 FRONT FORK

REF. NO.	PART NO.	DESCRIPTION	1D6S	1D6T				REMARKS
28	34L–23153–00	.RING, SNAP	1	1				
29	4NK–23145–00	.OIL SEAL	1	1				
30	4NK–23146–00	.WASHER, OIL SEAL	1	1				
31	4NK–23125–00	.METAL, SLIDE 1	1	1				
32	4NK–23157–00	.RING, PISTON	1	1				
33	4NK–23151–00	.SPRING, REBOUND	1	1				
34	4WM–23171–00	.PISTON, FRONT FORK	1	1				
35	4NK–23135–00	.METAL, SLIDE 2	1	1				
36	4WM–23166–00	.SPACER, OIL LOCK	1	1				
37	3MA–23129–10	.GASKET, DRAIN PLUG	1	1				
38	4NK–23181–00	.BOLT, HEXAGON SOCKET HEAD	1	1				
39	4NK–23193–00	.GUIDE, BOOT	1	1				
40	4V1–23184–L0	.CAP, AIR VALVE	1	1				
41	1KT–23181–00	.BOLT, HEXAGON SOCKET HEAD	1	1				
42	1D6–23340–00	UNDER BRACKET COMP.	1	1				
43	38W–23181–00	BOLT, HEXAGON SOCKET HEAD	4	4				
44	4XY–23181–00	BOLT, HEXAGON SOCKET HEAD	6	6				
45	4NK–23123–10	COVER, UNDER 1	2	2				
46	1D6–23121–10	COVER, UPPER 1	2	2				
47	4NK–23163–00	GASKET	2	2				
48	4NK–23165–00	WASHER, FELT	2	2				

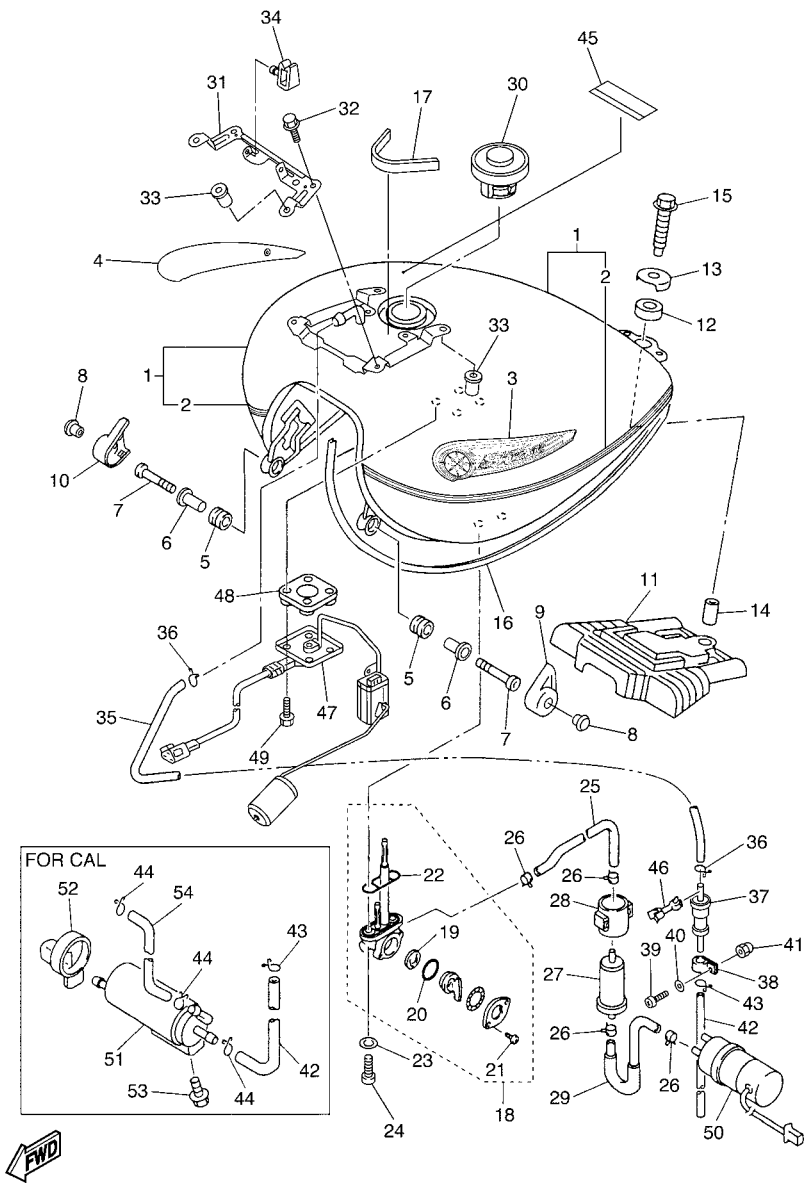

1D6G110-G290

FIG. 29 FUEL TANK

REF. NO.	PART NO.	DESCRIPTION	1D6S	1D6T				REMARKS
1	1D6–Y2410–10–X1	FUEL TANK COMP.	1	1				DBNM8/SMX
2	1D6–24240–70	.GRAPHIC SET	1	1				
3	1D6–2416B–40	EMBLEM	1	1				
4	1D6–2417B–40	EMBLEM	1	1				
5	90480–18354	GROMMET	2	2				
6	90387–06091	COLLAR	2	2				
7	91317–06035	BOLT	2	2				
8	2H9–23469–00	CAP, BOLT	2	2				
9	1D6–24129–00	COVER, SIDE 1	1	1				
10	1D6–24139–00	COVER, SIDE 2	1	1				
11	4XY–24182–00	DAMPER, LOCATING 2	1	1				
12	4XY–24183–00	DAMPER, LOCATING 3	1	1				
13	42X–24186–00	WASHER, SPECIAL	1	1				
14	90387–0813V	COLLAR	1	1				
15	90109–08002	BOLT	1	1				
16	1D6–24188–00	MOLD, FUEL TANK	1	1				
17	1D6–2414G–00	SEAL	1	1				
18	4WM–24500–02	FUEL COCK ASSY 1	1	1				
19	3AC–24523–00	.VALVE PACKING	1	1				
20	3AJ–24534–01	.SEAL, COCK	1	1				
21	97801–03008	.SCREW, PAN HEAD	2	2				
22	4X8–24512–00	.O-RING	1	1				
23	90202–05193	WASHER, PLATE	2	2				
24	90149–06011	SCREW	2	2				
25	4XY–24311–10	PIPE, FUEL 1	1	1				
26	90467–12053	CLIP	4	4				
27	1FK–24560–10	FILTER ASSY	1	1				

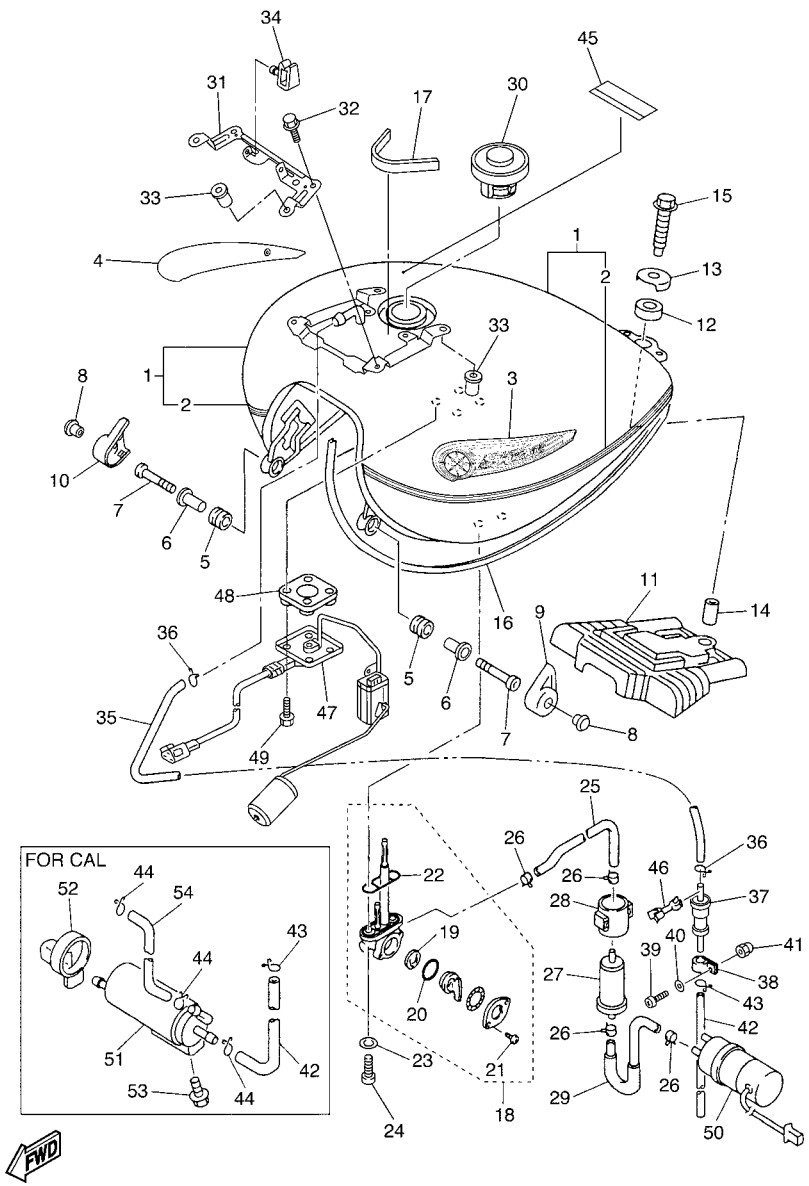

1D6G110-G290

FIG. 29 FUEL TANK

REF. NO.	PART NO.	DESCRIPTION	1D6S	1D6T				REMARKS
28	1FK–24566–00	BRACKET, FILTER	1	1				
29	4NK–24312–10	PIPE 2	1	1				
30	4NK–24602–11	CAP ASSY	1	1				
31	1D6–24157–00	STAY, FUEL TANK 1	1	1				
32	95027–06010	BOLT, FLANGE	2	2				
33	90179–05523	NUT	4	4				
34	90464–06005	CLAMP	1	1				
35	1D6–24321–10	PIPE 10	1	1				
36	90467–09002	CLIP	2	2				
37	5PX–24180–00	ROLL OVER VALVE ASSY	1	1				
38	90461–15100	CLAMP	1	1				
39	98507–05012	SCREW, PAN HEAD	1	1				
40	92907–05600	WASHER, PLATE	1	1				
41	90176–05054	NUT, CROWN	1	1				
42	90445–11053	HOSE (L400)	1	1				
43	90467–10041	CLIP	1	1				
44	90467–10041	CLIP		3				
45	5GK–2118K–00	LABEL, CAUTION	1	1				
46	90464–13103	CLAMP	2	2				
47	1D6–85752–00	SENDER UNIT ASSY, FUEL METER	1	1				
48	5G3–85753–00	GASKET, SENDER UNIT	1	1				
49	90119–05071	BOLT, WITH WASHER	4	4				
50	1D6–13907–00	FUEL PUMP COMP.	1	1				
51	4XY–24170–00	CANISTER ASSY		1				
52	2JU–2419E–00	COVER, CANISTER		1				
53	95807–06010	BOLT, FLANGE		2				
54	90445–11054	HOSE (L560)		1				

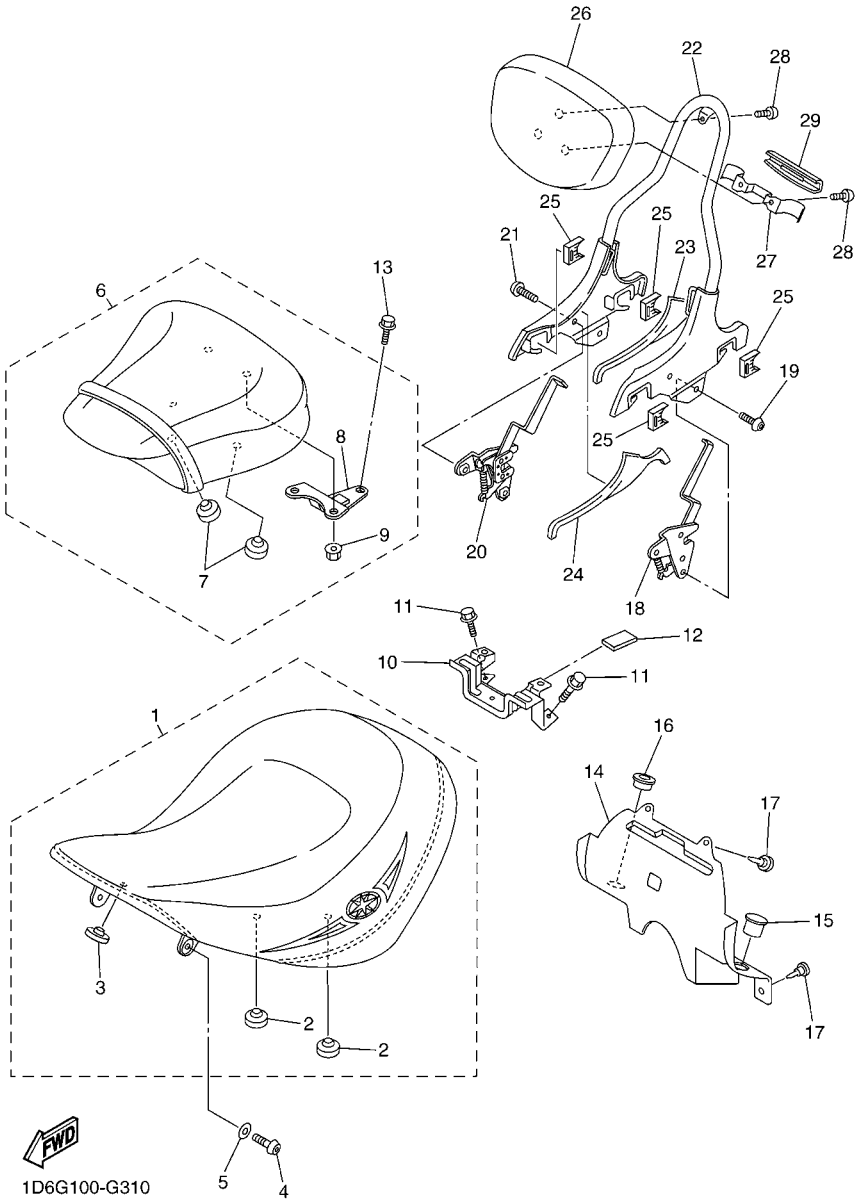

FIG. 30 SEAT

REF. NO.	PART NO.	DESCRIPTION	1D6S	1D6T				REMARKS
1	1D6–24710–00	SINGLE SEAT ASSY	1	1				
2	22W–24741–00	.PAD, SEAT	5	5				
3	3L7–24724–00	.DAMPER, SEAT	2	2				
4	92014–08020	BOLT, BUTTON HEAD	2	2				
5	92903–08200	WASHER, PLAIN	2	2				
6	1D6–24750–00	TANDEM SEAT ASSY	1	1				
7	22W–24741–00	.PAD, SEAT	3	3				
8	4NK–2471A–00	.STAY, SEAT	1	1				
9	95707–06500	.NUT, FLANGE	2	2				
10	4NK–2475H–00	BRACKET, SEAT LEVER 1	1	1				
11	95027–06012	BOLT, FLANGE	3	3				
12	509–24724–00	DAMPER, SEAT	2	2				
13	95024–08012	BOLT, FLANGE	1	1				
14	4NK–24796–00	COVER	1	1				
15	90338–23172	PLUG	1	1				
16	4XY–24847–00	HOLDER 1	1	1				
17	90269–06083	RIVET	4	4				
18	1D6–216A0–00	LOCK ASSY	1	1				
19	90111–06054	BOLT,HEX. SOCKET BUTTON	2	2				
20	1D6–216B0–00	LOCK ASSY 2	1	1				
21	90111–06054	BOLT,HEX. SOCKET BUTTON	2	2				
22	1D6–21640–00	REAR STAY COMP.	1	1				
23	1D6–2163A–00	COVER, REAR FENDER 1	1	1				
24	1D6–2163E–00	COVER, REAR FENDER 2	1	1				
25	1D6–216A1–00	STOPPER, RUBBER	4	4				
26	1D6–2840F–10	BACK REST ASSY	1	1				
27	5GA–2164G–00	STAY 2	1	1				

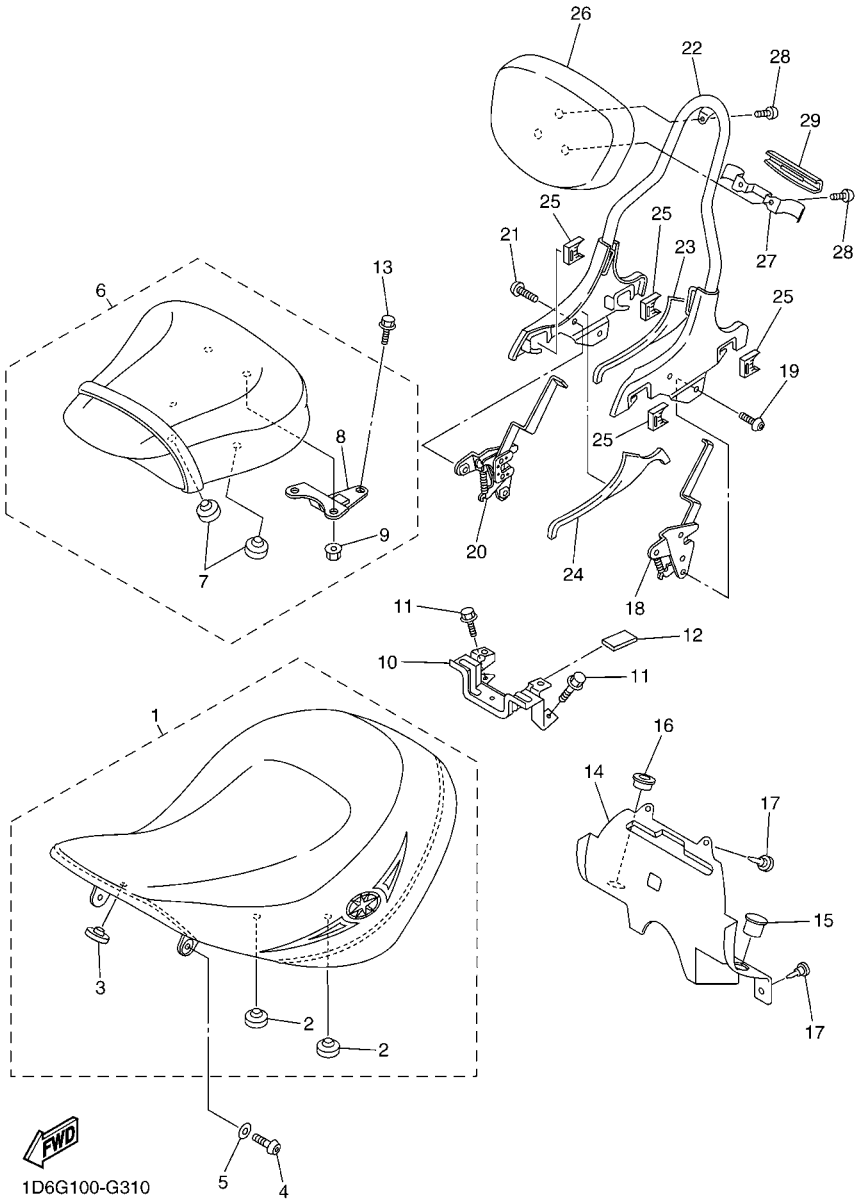

FIG. 30 SEAT

REF. NO.	PART NO.	DESCRIPTION	1D6S	1D6T				REMARKS
28	90111–06003	BOLT,HEX. SOCKET BUTTON	3	3				
29	5GA–24786–11	EMBLEM	1	1				

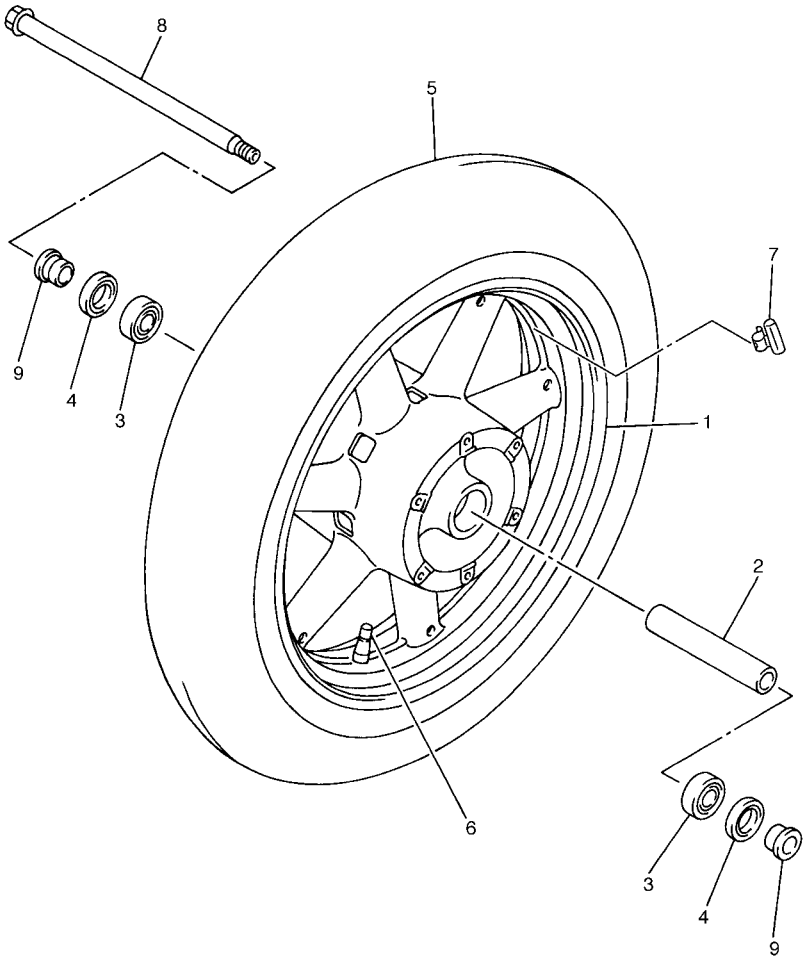

4XYT100-C320

FIG. 31 FRONT WHEEL

REF. NO.	PART NO.	DESCRIPTION	1D6S	1D6T				REMARKS
1	4NK–25168–00–33	CAST WHEEL, FRONT	1	1				YB
2	90387–2208J	COLLAR	1	1				
3	93306–00420	BEARING	2	2				
4	93106–28043	OIL SEAL	2	2				
5	94115–16024	TIRE (150/80-16M/C 71H G705)	1	1				BRIDGESTONE
6	93900–00030	VALVE, RIM (TR412)	1	1				TAIHEIYO
7	5MT–25398–00	BALANCER, WHEEL (10G)	1	1				UR
	5MT–25398–10	BALANCER, WHEEL (20G)	1	1				UR
	5MT–25398–20	BALANCER, WHEEL (30G)	1	1				UR
8	4NK–25181–00	AXLE, WHEEL	1	1				
9	90387–2200T	COLLAR	2	2				

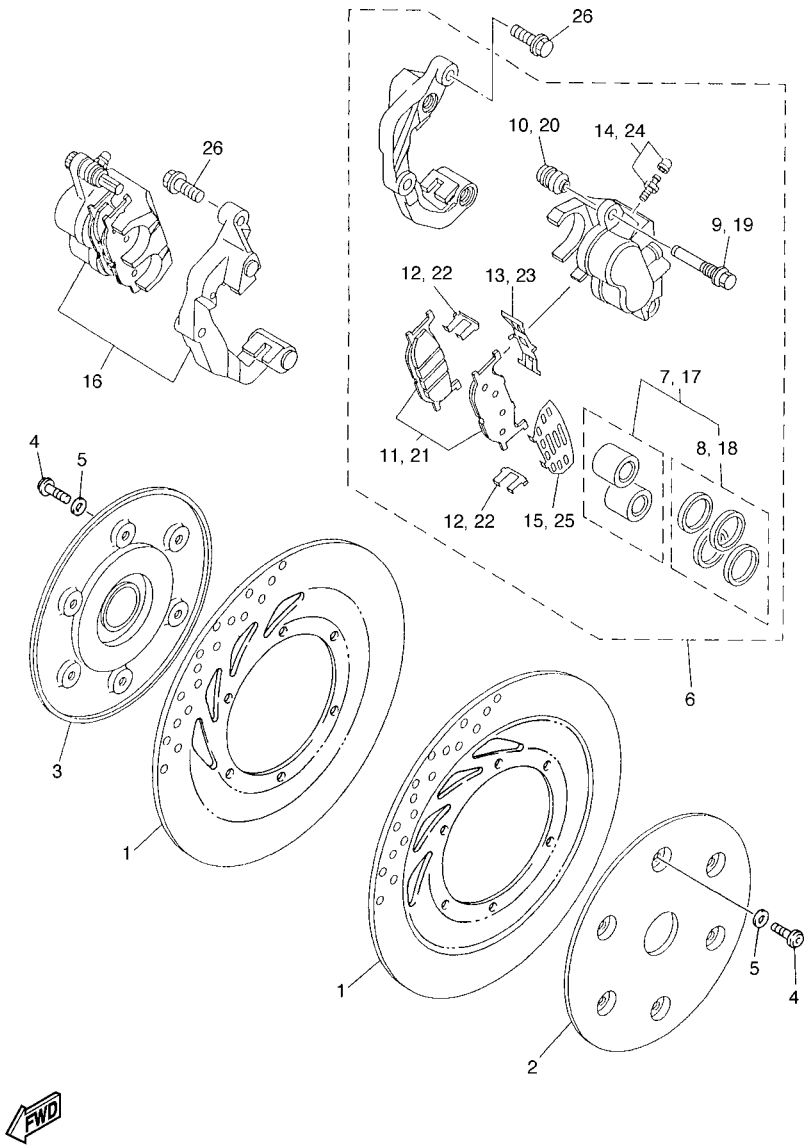

FIG. 32 FRONT BRAKE CALIPER

REF. NO.	PART NO.	DESCRIPTION	1D6S	1D6T				REMARKS
1	5BN–2582U–00	DISK, BRAKE (RIGHT)	2	2				
2	4NK–2514A–00	RING, WHEEL 1	1	1				
3	4NK–2515A–00	RING, WHEEL 2	1	1				
4	90109–08006	BOLT	12	12				
5	90201–08014	WASHER, PLATE	12	12				
6	4WM–2580T–01	CALIPER ASSY (LEFT)	1	1				
7	3JB–W0057–00	.PISTON ASSY, CALIPER	1	1				
8	3JB–W0047–00	..CALIPER SEAL KIT	1	1				
9	5JW–25914–10	.PIN, SLIDE	2	2				
10	4TT–25937–00	.BOOT 2	2	2				
11	4WM–W0045–00	.BRAKE PAD KIT	1	1				
12	4BP–25919–00	.SUPPORT, PAD	2	2				
13	3YX–25929–00	.SPRING, ANTI RATTLE	1	1				
14	51L–W0048–00	.BLEED SCREW KIT	1	1				
15	5BN–25827–00	.SHIM, CALIPER	1	1				
16	4WM–2580U–01	CALIPER ASSY (RIGHT)	1	1				
17	3JB–W0057–00	.PISTON ASSY, CALIPER	1	1				
18	3JB–W0047–00	..CALIPER SEAL KIT	1	1				
19	5JW–25914–10	.PIN, SLIDE	2	2				
20	4TT–25937–00	.BOOT 2	2	2				
21	4WM–W0045–00	.BRAKE PAD KIT	1	1				
22	4BP–25919–00	.SUPPORT, PAD	2	2				
23	3YX–25929–00	.SPRING, ANTI RATTLE	1	1				
24	51L–W0048–00	.BLEED SCREW KIT	1	1				
25	5BN–25827–00	.SHIM, CALIPER	1	1				
26	90105–10638	BOLT, FLANGE	4	4				

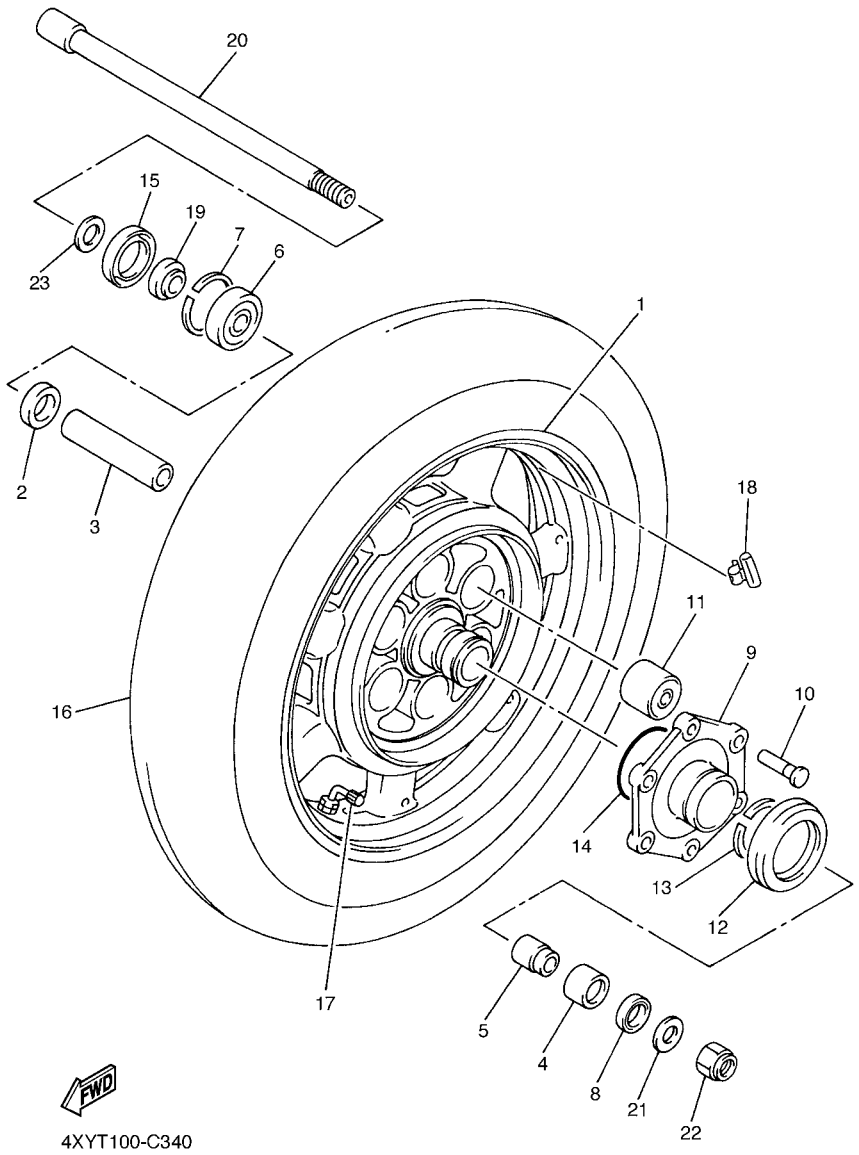

FIG. 33 REAR WHEEL

REF. NO.	PART NO.	DESCRIPTION	1D6S	1D6T				REMARKS
1	4NK–25338–01–33	CAST WHEEL, REAR	1	1				YB
2	2H7–25315–00	FLANGE, SPACER	1	1				
3	90387–2008H	COLLAR	1	1				
4	93317–32677	BEARING	1	1				
5	90387–2007J	COLLAR	1	1				
6	93306–30437	BEARING	1	1				
7	99009–52500	CIRCLIP	1	1				
8	93102–25064	OIL SEAL	1	1				
9	26H–25366–01	CLUTCH, HUB	1	1				
10	90249–12167	PIN	6	6				
11	1FK–25364–00	DAMPER	6	6				
12	1J7–25319–02	SEAL, HUB DUST	1	1				
13	93440–45022	CIRCLIP	1	1				
14	93210–68347	O-RING	1	1				
15	93102–40367	OIL SEAL	1	1				
16	94115–15009	TIRE (150/90B15M/C 74H G702)	1	1				BRIDGESTONE
17	93900–00025	VALVE, RIM (PVR59A)	1	1				TAIHEIYO
18	5MT–25398–00	BALANCER, WHEEL (10G)	1	1				UR
	5MT–25398–10	BALANCER, WHEEL (20G)	1	1				UR
	5MT–25398–20	BALANCER, WHEEL (30G)	1	1				UR
19	90387–200J2	COLLAR	1	1				
20	4YE–25381–00	AXLE, WHEEL	1	1				
21	90201–181U5	WASHER, PLATE	1	1				
22	90185–18167	NUT, SELF-LOCKING	1	1				
23	92903–20600	WASHER	1	1				

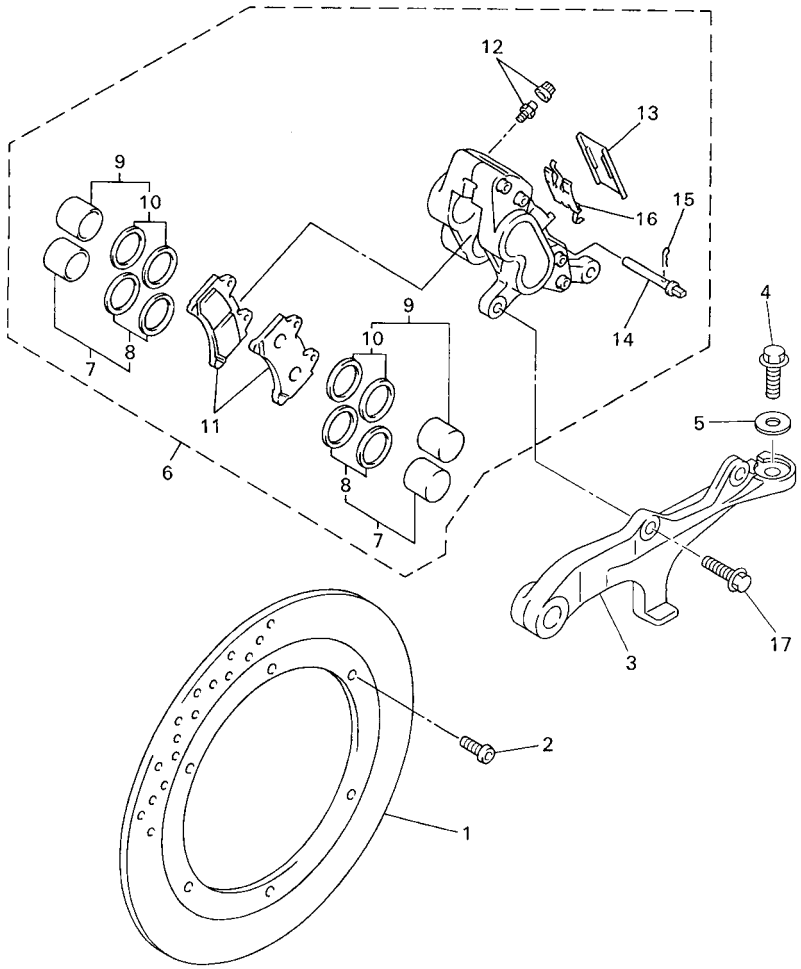

4XY1100-9350

FIG. 34 REAR BRAKE CALIPER

REF. NO.	PART NO.	DESCRIPTION	1D6S	1D6T				REMARKS
1	4NK–2582W–00	DISK, REAR BRAKE 2	1	1				
2	90109–083G4	BOLT	6	6				
3	4XY–25819–00	BRACKET, CALIPER	1	1				
4	95024–10030	BOLT, FLANGE	1	1				
5	90201–10437	WASHER, PLATE	1	1				
6	4NK–2580W–00	CALIPER ASSY, REAR 2	1	1				
7	1KT–W0057–00	.PISTON ASSY, CALIPER	1	1				
8	1KT–W0047–00	..CALIPER SEAL KIT	1	1				
9	4NK–W0057–00	.PISTON ASSY, CALIPER	1	1				
10	4NK–W0047–00	..CALIPER SEAL KIT	1	1				
11	4NK–W0046–00	.BRAKE PAD KIT 2	1	1				
12	1J3–W0048–00	.BLEED SCREW KIT	1	1				
13	1NL–25836–00	.COVER, DUST	1	1				
14	3HE–25924–00	.PIN, PAD	2	2				
15	3GM–25925–00	.CLIP	2	2				
16	1NL–25919–00	.SUPPORT, PAD	1	1				
17	90105–10638	BOLT, FLANGE	2	2				

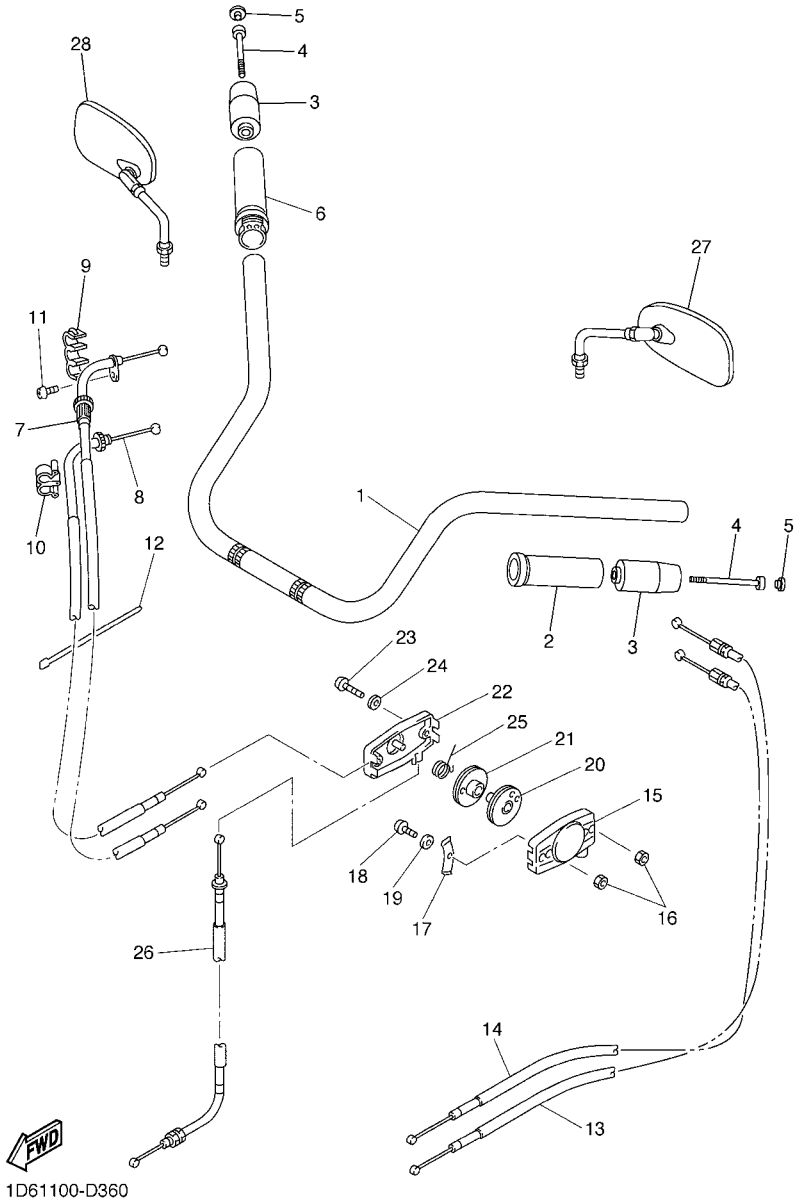

FIG. 35 STEERING HANDLE & CABLE

REF. NO.	PART NO.	DESCRIPTION	1D6S	1D6T				REMARKS
1	1D6–26110–01	HANDLE COMP.	1	1				
2	4NK–26241–00	GRIP(LEFT)	1	1				
3	1D6–26246–00	END, GRIP	2	2				
4	90110–06123	BOLT, HEXAGON SOCKET HEAD	2	2				
5	90338–06162	PLUG	2	2				
6	4XY–26240–00	GRIP ASSY	1	1				
7	1D6–26311–00	CABLE, THROTTLE 1	1	1				
8	1D6–26312–00	CABLE, THROTTLE 2	1	1				
9	90468–07179	CLIP	1	1				
10	90468–15139	CLIP	1	1				
11	98507–05008	SCREW, PAN HEAD	1	1				
12	90464–16061	CLAMP	1	1				
13	4XY–26313–00	CABLE, THROTTLE 3	1	1				
14	4XY–2631J–00	CABLE, THROTTLE 4	1	1				
15	41V–2629A–00	HOUSING COMP.	1	1				
16	95607–05100	NUT, U	4	4				
17	41V–2627E–00	CLAMP,WIRE	2	2				
18	98507–05014	SCREW, PAN HEAD	2	2				
19	92907–05600	WASHER, PLATE	2	2				
20	41V–26273–00	ROTOR	1	1				
21	41V–2627A–00	ROTOR 2	1	1				
22	41V–2629G–01	HOUSING 2	1	1				
23	98507–05025	SCREW, PAN HEAD	2	2				
24	92907–05600	WASHER, PLATE	2	2				
25	41V–2629L–00	SPRING, TORSION	1	1				
26	4XY–2637E–00	CABLE, CONTROL 1	1	1				
27	4NK–26280–10	REAR VIEW MIRROR ASSY (LEFT)	1	1				

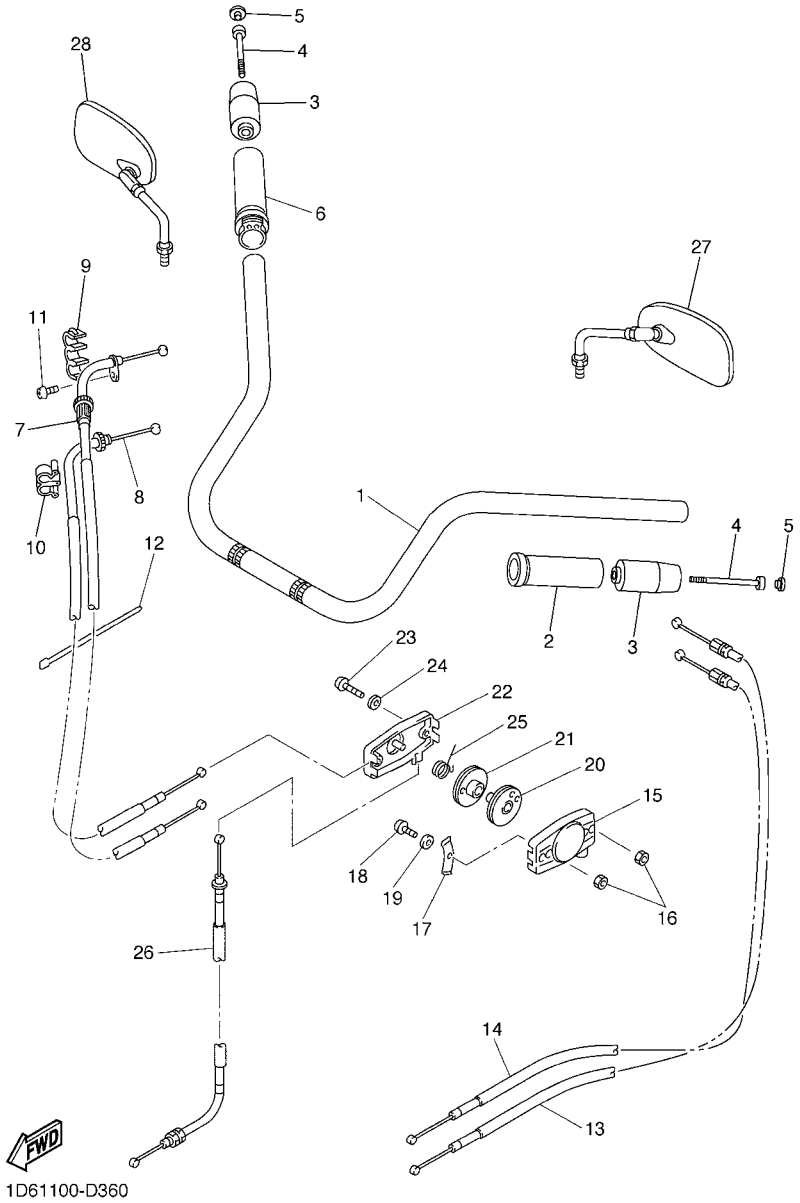

FIG. 35 STEERING HANDLE & CABLE

REF. NO.	PART NO.	DESCRIPTION	1D6S	1D6T				REMARKS
28	4NK–26290–10	REAR VIEW MIRROR ASSY (RIGHT)	1	1				

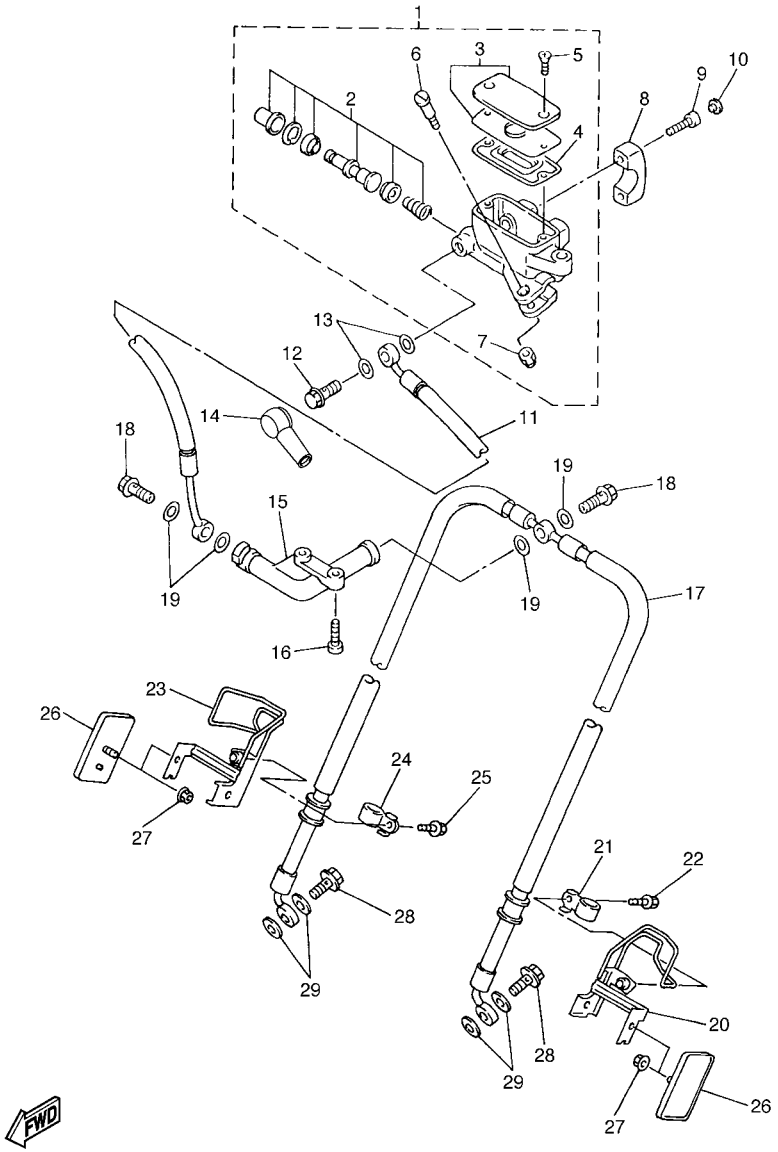

1D61100-D370

FIG. 36 FRONT MASTER CYLINDER

REF. NO.	PART NO.	DESCRIPTION	1D6S	1D6T				REMARKS
1	4XY–W2587–10	MASTER CYLINDER SUB ASSY	1	1				
2	4K0–W0041–50	.CYLINDER KIT, MASTER	1	1				
3	5VN–W2585–20	.RESERVOIR CAP SET	1	1				
4	4NK–25854–00	.GASKET, DIAPHRAGM	1	1				
5	4NK–2589H–00	.SCREW	2	2				
6	4NK–2589F–00	.BOLT, LEVER	1	1				
7	95604–06100	.NUT, U	1	1				
8	4NK–25867–00	HOLDER	1	1				
9	91314–06025	BOLT, HEXAGON SOCKET HEAD	2	2				
10	90338–06162	PLUG	2	2				
11	1D6–25872–00	HOSE, BRAKE 1	1	1				
12	90401–10020	BOLT, UNION	1	1				
13	90430–10005	GASKET	2	2				
14	4L0–25862–01	BOOT, MASTER CYLINDER	1	1				
15	4NK–25885–00	JOINT	1	1				
16	91317–06020	BOLT	2	2				
17	1D6–25873–00	HOSE, BRAKE 2	1	1				
18	90401–10020	BOLT, UNION	2	2				
19	90430–10005	GASKET	4	4				
20	4XY–25875–00	HOLDER, BRAKE HOSE 1	1	1				
21	90461–10132	CLAMP	1	1				
22	95807–06012	BOLT, FLANGE	1	1				
23	4XY–25886–00	HOLDER, BRAKE HOSE	1	1				
24	90461–10132	CLAMP	1	1				
25	95807–06012	BOLT, FLANGE	1	1				
26	11H–85110–01	REFLECTOR ASSY	2	2				
27	95707–05500	NUT, FLANGE	2	2				

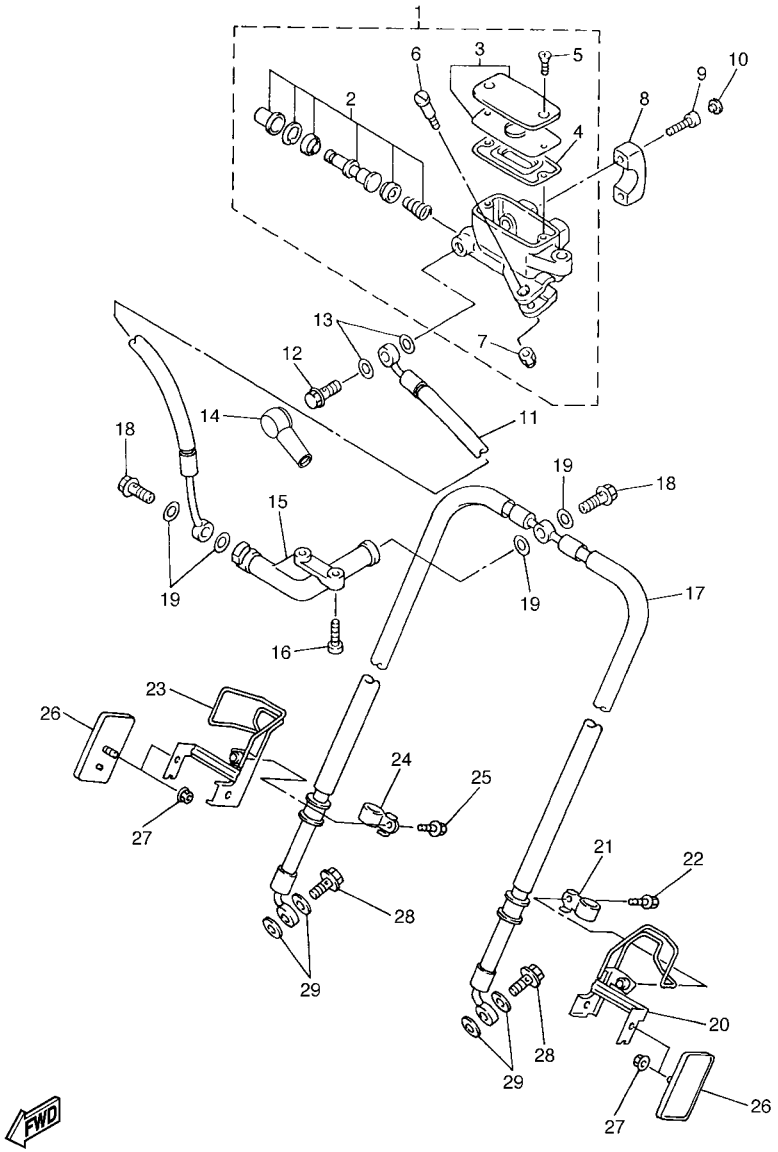

1D61100-D370

FIG. 36 FRONT MASTER CYLINDER

REF. NO.	PART NO.	DESCRIPTION	1D6S	1D6T				REMARKS
28	90401–10020	BOLT, UNION	2	2				
29	90430–10005	GASKET	4	4				

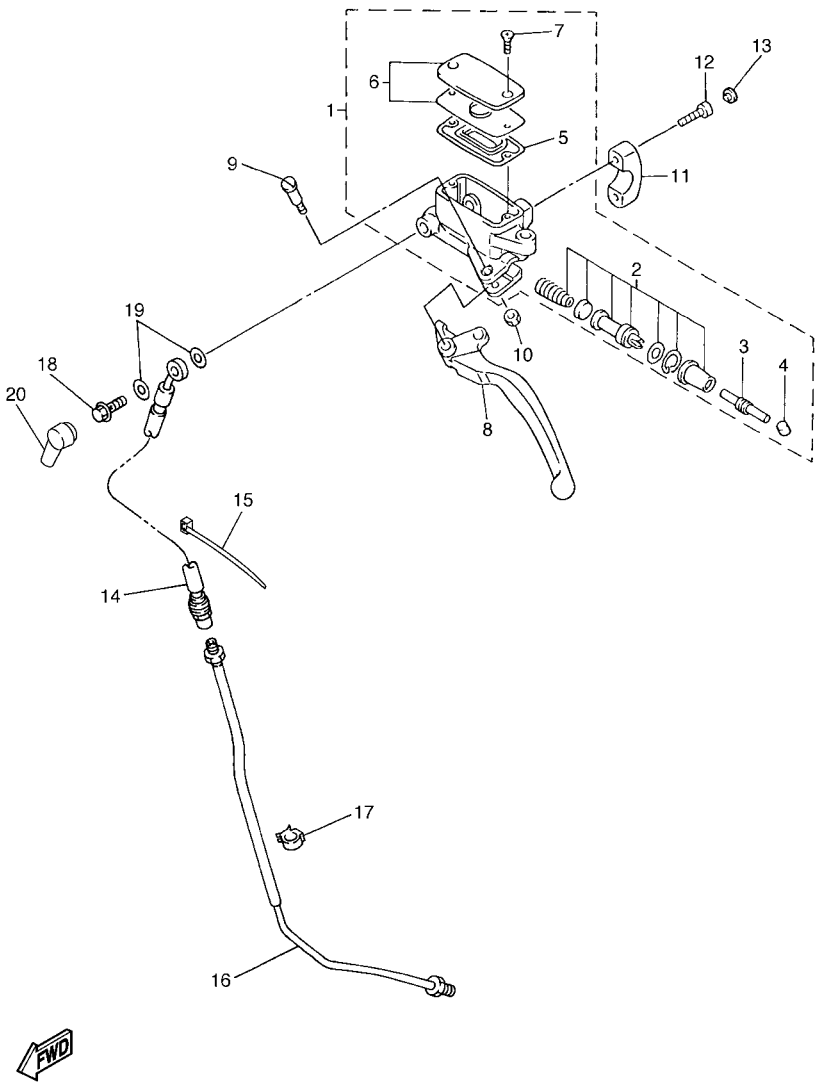

FIG. 37 FRONT MASTER CYLINDER 2

REF. NO.	PART NO.	DESCRIPTION	1D6S	1D6T				REMARKS
1	4NK–W2645–10	MASTER CYLINDER SUB ASSY	1	1				
2	3GM–W0099–00	.CYLINDER KIT, MASTER (CLUTCH)	1	1				
3	3GM–26464–00	.ROD, PUSH	1	1				
4	3GM–26455–00	.BUSH	1	1				
5	4NK–25854–00	.GASKET, DIAPHRAGM	1	1				
6	5VN–W2585–20	.RESERVOIR CAP SET	1	1				
7	4NK–2589H–00	.SCREW	2	2				
8	1D6–83912–00	LEVER 1	1	1				
9	4NK–83945–00	BOLT, LEVER	1	1				
10	95604–06100	NUT, U	1	1				
11	4NK–25867–00	HOLDER	1	1				
12	91314–06025	BOLT, HEXAGON SOCKET HEAD	2	2				
13	90338–06162	PLUG	2	2				
14	1D6–26472–00	HOSE, CLUTCH 1	1	1				
15	90464–16061	CLAMP	1	1				
16	4XY–26471–00	PIPE	1	1				
17	90464–10190	CLAMP	1	1				
18	90401–10020	BOLT, UNION	1	1				
19	90430–10005	GASKET	2	2				
20	4L0–25862–01	BOOT, MASTER CYLINDER	1	1				

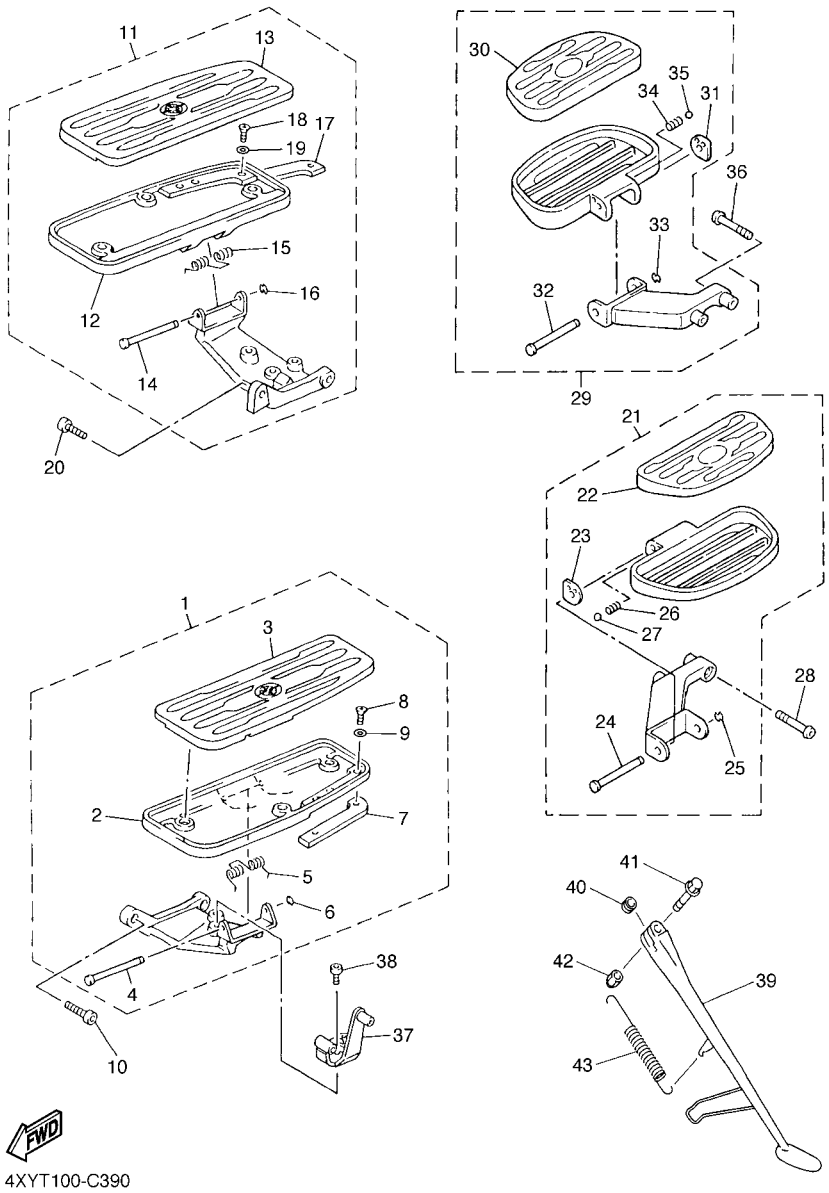

4XYT100-C390

FIG. 38 STAND & FOOTREST

REF. NO.	PART NO.	DESCRIPTION	1D6S	1D6T				REMARKS
1	4XY–27410–10	FRONT FOOTREST ASSY (LEFT)	1	1				
2	4NK–27451–10	.FOOTREST	1	1				
3	4XY–27413–01	.COVER, FOOTREST	1	1				
4	3D8–27427–00	.SHAFT	1	1				
5	4NK–27426–00	.SPRING, RETURN	1	1				
6	99001–06600	.CIRCLIP	1	1				
7	4NK–27496–00	.MOLE 1	1	1				
8	90157–05095	.SCREW, PAN HEAD	2	2				
9	92907–05200	.WASHER	2	2				
10	90110–10161	BOLT, HEXAGON SOCKET HEAD	2	2				
11	4XY–27420–10	FRONT FOOTREST ASSY (RIGHT)	1	1				
12	4NK–27461–10	.FOOTREST	1	1				
13	4XY–27423–01	.COVER, FOOTREST	1	1				
14	3D8–27427–00	.SHAFT	1	1				
15	4NK–27426–00	.SPRING, RETURN	1	1				
16	99001–06600	.CIRCLIP	1	1				
17	4NK–27497–00	.MOLE 2	1	1				
18	90157–05095	.SCREW, PAN HEAD	2	2				
19	92907–05200	.WASHER	2	2				
20	90110–10161	BOLT, HEXAGON SOCKET HEAD	2	2				
21	4XY–27430–00	REAR FOOTREST ASSY 1	1	1				
22	4YE–27433–00	.COVER, REAR FOOTREST	1	1				
23	4YE–27437–01	.WASHER, SPECIAL	1	1				
24	4YE–27427–01	.SHAFT	1	1				
25	99001–06600	.CIRCLIP	1	1				
26	90501–13720	.SPRING, COMPRESSION	1	1				
27	93501–04011	.BALL	1	1				

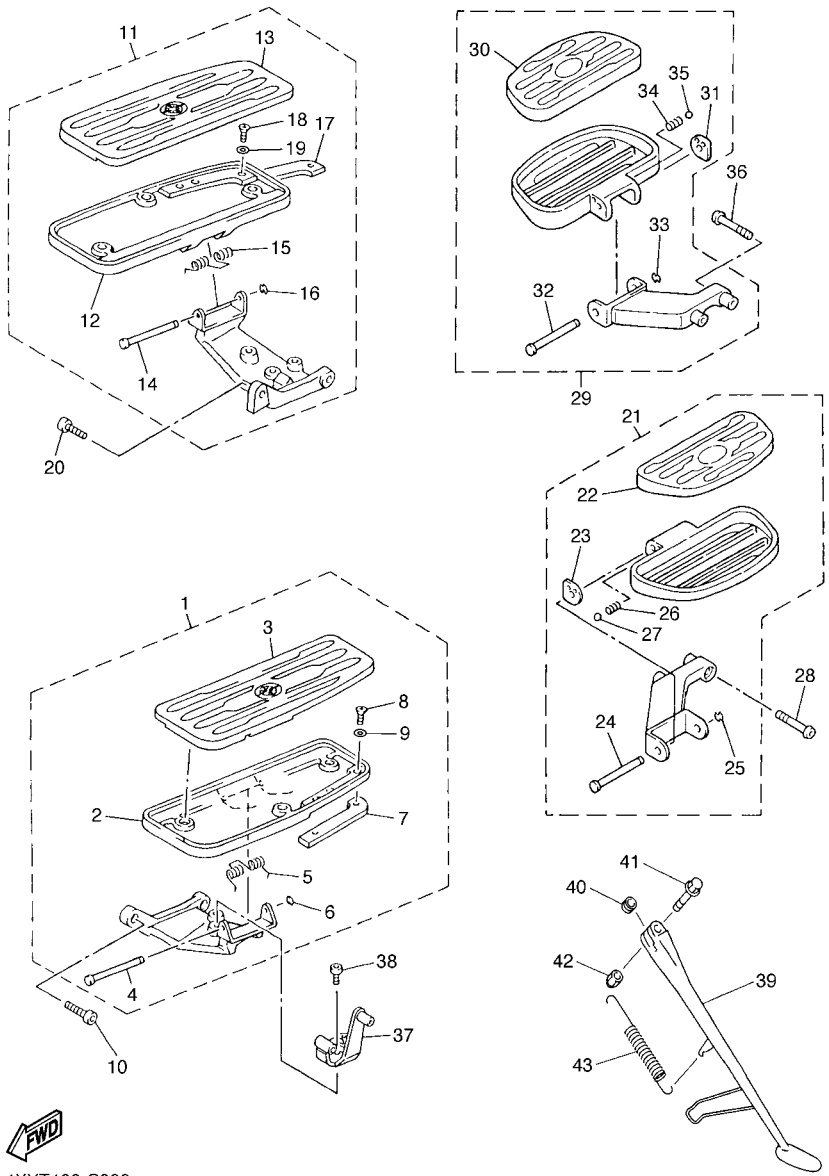

4XYT100-C390

FIG. 38 STAND & FOOTREST

REF. NO.	PART NO.	DESCRIPTION	1D6S	1D6T				REMARKS
28	92017–08040	BOLT, BUTTON HEAD	2	2				
29	4XY–27440–00	REAR FOOTREST ASSY 2	1	1				
30	4YE–27433–00	.COVER, REAR FOOTREST	1	1				
31	4YE–27437–01	.WASHER, SPECIAL	1	1				
32	4YE–27427–01	.SHAFT	1	1				
33	99001–06600	.CIRCLIP	1	1				
34	90501–13720	.SPRING, COMPRESSION	1	1				
35	93501–04011	.BALL	1	1				
36	92017–08040	BOLT, BUTTON HEAD	2	2				
37	4NK–27443–00	BRACKET 3	1	1				
38	91317–08014	BOLT	2	2				
39	4XY–27311–00	STAND, SIDE	1	1				
40	90387–1215U	COLLAR	1	1				
41	90105–12460	BOLT, FLANGE	1	1				
42	90185–12134	NUT, SELF-LOCKING	1	1				
43	90506–35474	SPRING, TENSION	1	1				

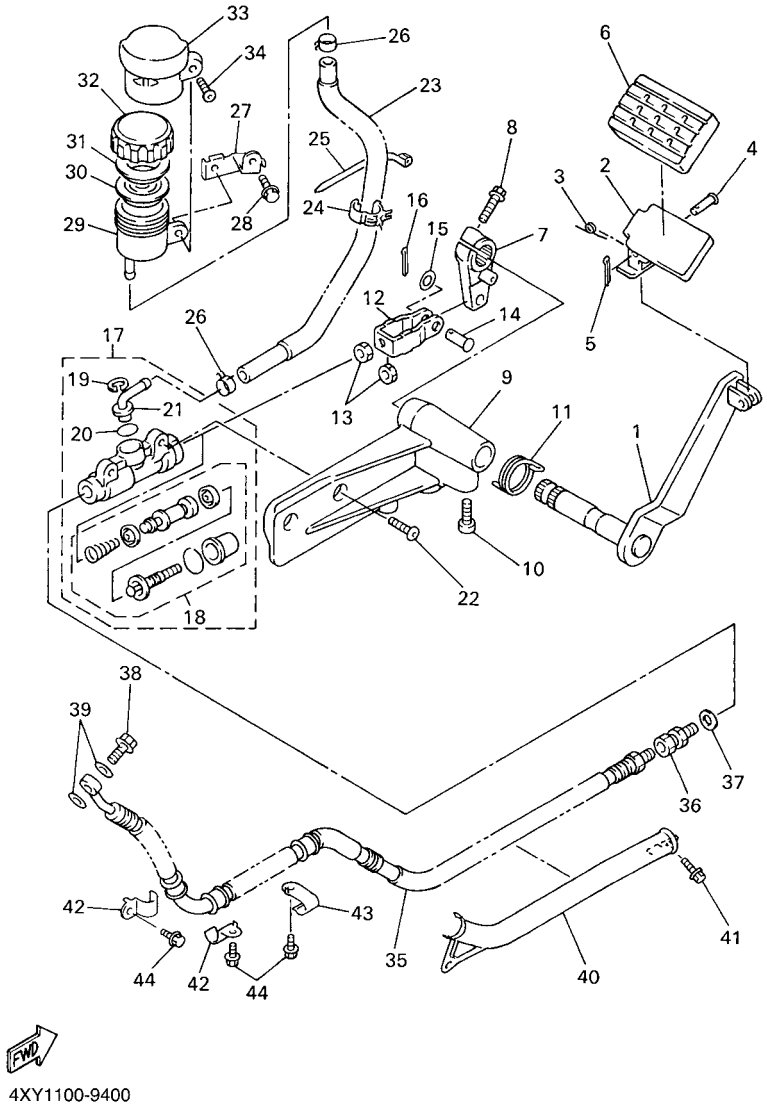

4XY1100-9400

FIG. 39 REAR MASTER CYLINDER

REF. NO.	PART NO.	DESCRIPTION	1D6S	1D6T				REMARKS
1	4NK–27211–00	PEDAL, BRAKE	1	1				
2	4NK–27242–00	PEDAL, BRAKE	1	1				
3	90508–18023	SPRING, TORSION	1	1				
4	91702–06022	PIN, CLEVIS	1	1				
5	91402–20012	PIN, COTTER	1	1				
6	4NK–27285–00	CAP	1	1				
7	4NK–27262–00	LEVER	1	1				
8	95027–06025	BOLT, FLANGE	1	1				
9	4NK–2741L–01	BRACKET 4	1	1				
10	91317–08016	BOLT	3	3				
11	4NK–27316–00	SPRING, SIDE STAND	1	1				
12	4NK–27222–00	JOINT	1	1				
13	95307–08700	NUT	2	2				
14	90240–08013	PIN, CLEVIS	1	1				
15	90201–08083	WASHER, PLATE	1	1				
16	91401–16012	PIN, COTTER	1	1				
17	4NK–2583V–00	RR. MASTER CYLINDER ASSY.	1	1				
18	1FK–W0042–50	.CYLINDER KIT, MASTER	1	1				
19	2VN–25866–00	.CIRCLIP	1	1				
20	93210–15620	.O-RING	1	1				
21	3LD–2582A–00	.JOINT	1	1				
22	92014–08020	BOLT, BUTTON HEAD	2	2				
23	4XY–25895–00	HOSE, RESERVOIR	1	1				
24	90464–20191	CLAMP	3	3				
25	90464–13073	CLAMP	1	1				
26	90467–14057	CLIP	2	2				
27	4XY–21228–00	BRACKET, RESERVE TANK	1	1				

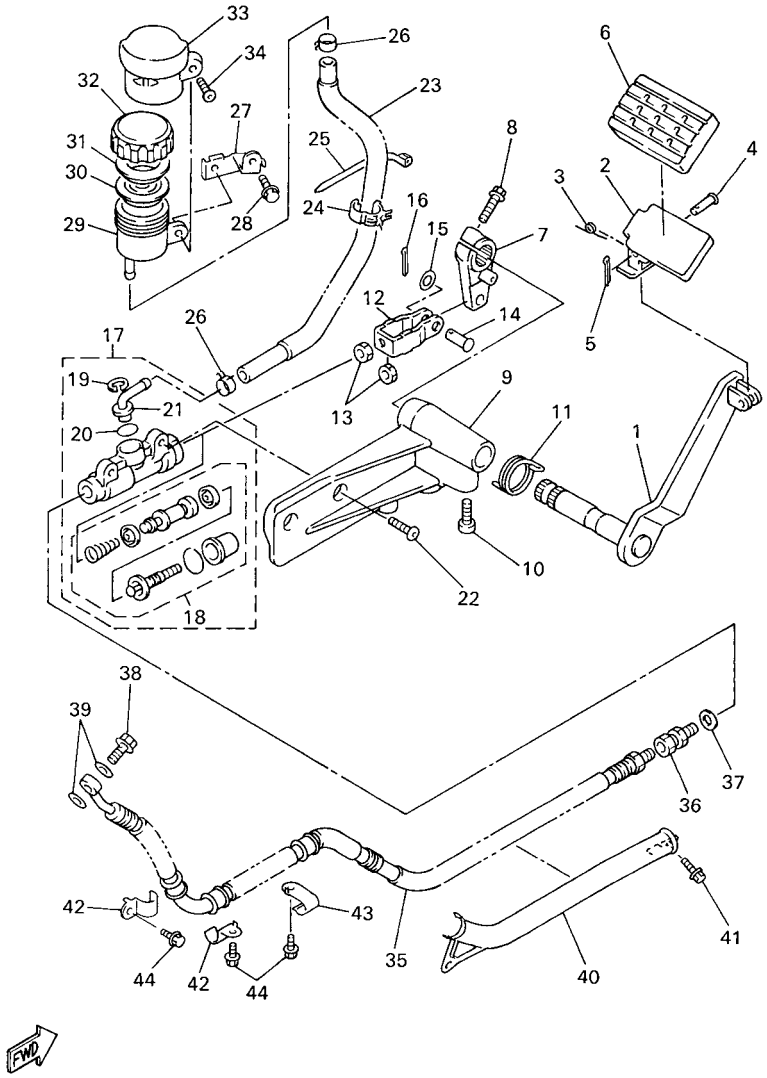

4XY1100-9400

FIG. 39 REAR MASTER CYLINDER

REF. NO.	PART NO.	DESCRIPTION	1D6S	1D6T				REMARKS
28	95027–06012	BOLT, FLANGE	1	1				
29	31A–25894–01	TANK, RESERVOIR	1	1				
30	360–25854–01	GASKET, DIAPHRAGM	1	1				
31	2GU–25855–00	BUSH,DIAPHRAGM	1	1				
32	2KF–25852–50	CAP, RESERVOIR	1	1				
33	4NK–25888–00	COVER, RESERVOIR TANK	1	1				
34	92014–06016	BOLT, BUTTON HEAD	1	1				
35	4XY–2581J–01	HOSE, BRAKE 4	1	1				
36	3LC–25885–00	JOINT	1	1				
37	90430–10005	GASKET	1	1				
38	90401–10020	BOLT, UNION	1	1				
39	90430–10005	GASKET	2	2				
40	4NK–25887–00	HOLDER, BRAKE HOSE	1	1				
41	95024–06012	BOLT, FLANGE	2	2				
42	3XV–25876–00	HOLDER, BRAKE HOSE 2	2	2				
43	4XY–25876–00	HOLDER, BRAKE HOSE 2	1	1				
44	95027–06016	BOLT, FLANGE	3	3				

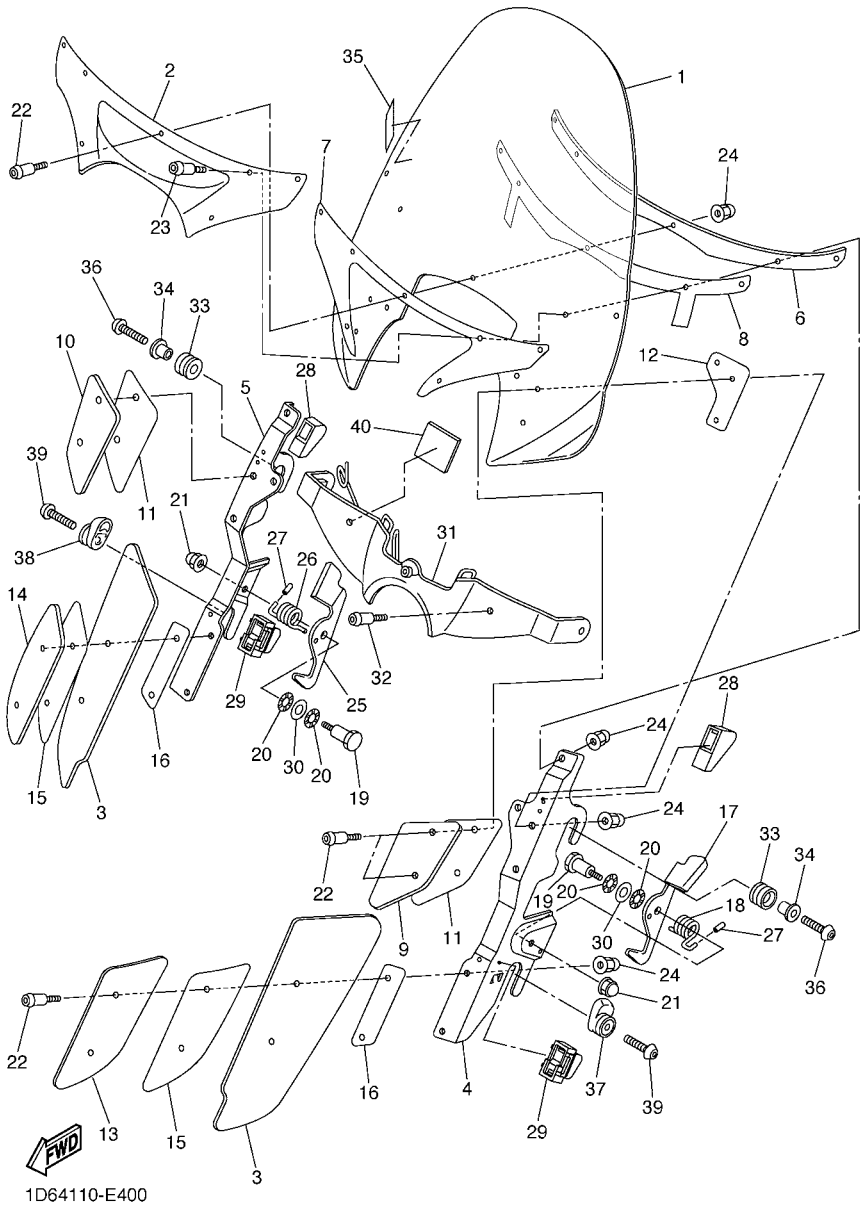

FIG. 40 COWLING 1

REF. NO.	PART NO.	DESCRIPTION	1D6S	1D6T				REMARKS
1	1D6–2837U–00	SCREEN	1	1				
2	1D6–28336–00	PLATE	1	1				
3	1D6–2835U–01	PANEL 1	2	2				
4	1D6–2836A–10	BRACKET 1	1	1				
5	1D6–2836E–10	BRACKET 2	1	1				
6	1D6–28337–00	HOLDER	1	1				
7	1D6–2837J–00	DAMPER 5	1	1				
8	1D6–28345–00	MOLE 1	1	1				
9	1D6–2836C–00	EMBLEM	1	1				
10	1D6–2837C–00	EMBLEM	1	1				
11	1D6–2837K–00	DAMPER 6	2	2				
12	1D6–28346–00	MOLE 2	2	2				
13	1D6–28396–00	PLATE 1	1	1				
14	1D6–28397–00	PLATE 2	1	1				
15	1D6–2834E–00	DAMPER 3	2	2				
16	1D6–28347–00	MOLE 3	2	2				
17	1D6–2837G–00	LOCK 1	1	1				
18	1D6–28388–00	SPRING	1	1				
19	1D6–28331–00	BOLT, LEG SHIELD	2	2				
20	90206–12M00	WASHER, WAVE	4	4				
21	90176–06041	NUT, CROWN	2	2				
22	1D6–28333–09	BOLT	13	13				
23	1D6–28374–09	BOLT, COWLING	2	2				
24	90176–05051	NUT, CROWN	15	15				
25	1D6–2837H–00	LOCK 2	1	1				
26	1D6–2838C–00	SPRG 2	1	1				
27	1D6–2834V–00	PROTECTOR 1	2	2				

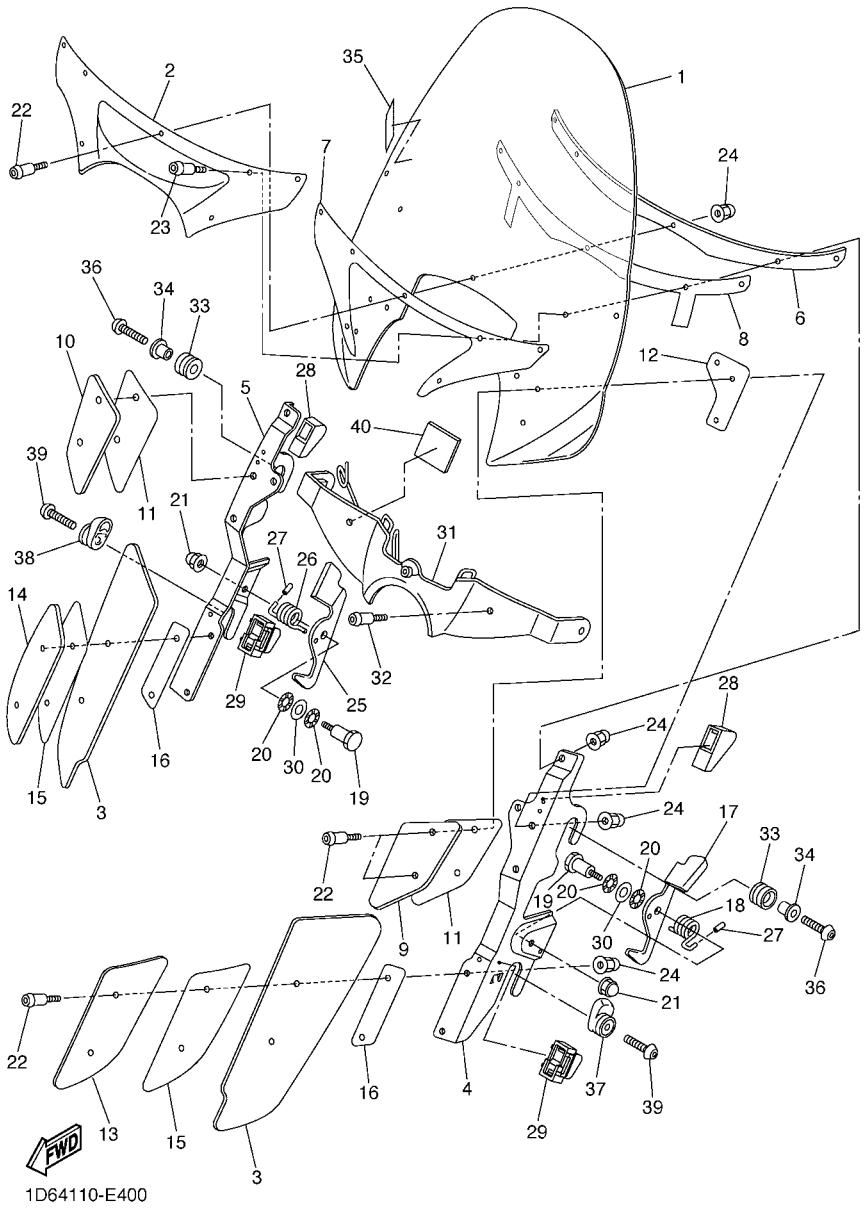

FIG. 40 COWLING 1

REF. NO.	PART NO.	DESCRIPTION	1D6S	1D6T				REMARKS
28	1D6–283C1–00	STOPPER, RUBBER 1	2	2				
29	1D6–283C2–00	STOPPER, RUBBER 2	2	2				
30	90201–12181	WASHER, PLATE	2	2				
31	1D6–28356–01	STAY 1	1	1				
32	90111–10016	BOLT,HEX. SOCKET BUTTON	2	2				
33	1D6–28372–00	DAMPER	2	2				
34	90387–08025	COLLAR	2	2				
35	4B5–2815K–00	LABEL, NOTICE WINDSHIELD 1	1	1				
36	90111–08009	BOLT,HEX. SOCKET BUTTON	2	2				
37	1D6–2836T–00	DAMPER, LOCATING 1	1	1				
38	1D6–2836U–00	DAMPER, LOCATING 2	1	1				
39	90111–08009	BOLT,HEX. SOCKET BUTTON	2	2				
40	1D6–2834W–00	PROTECTOR 2	1	1				

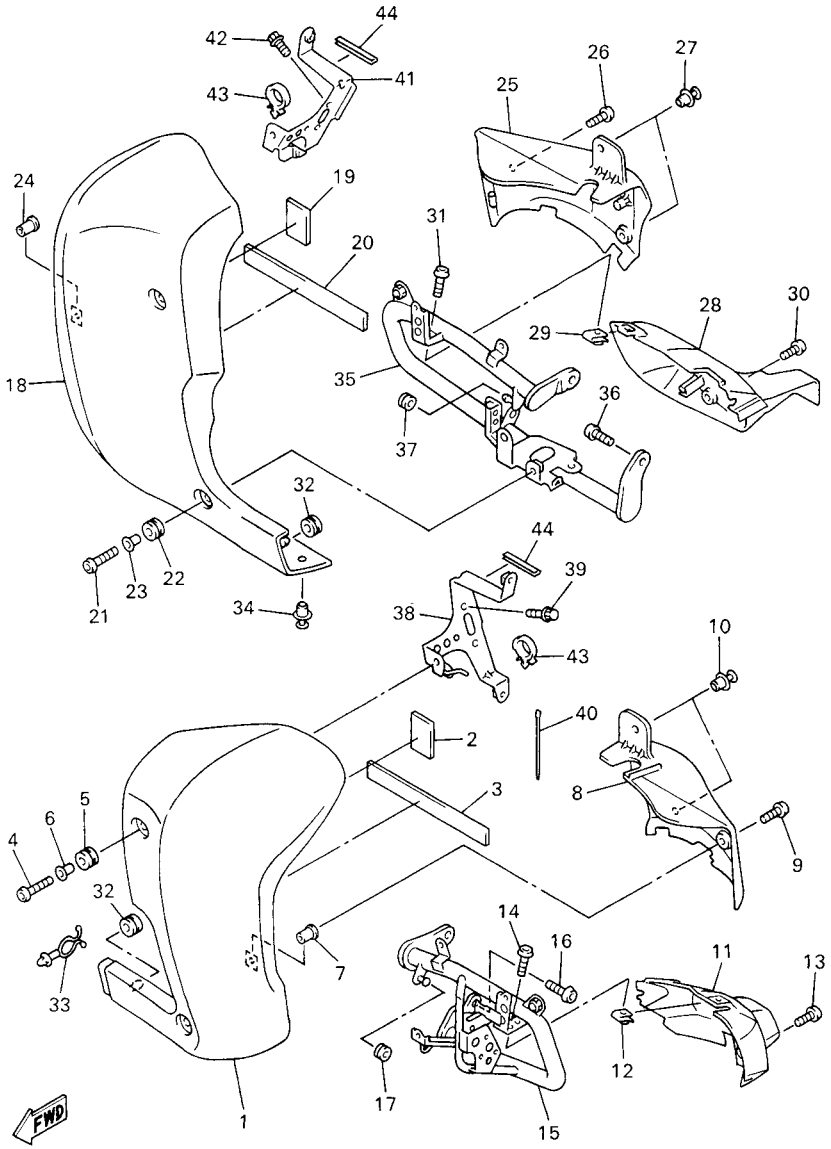

FIG. 41 COWLING 2

REF. NO.	PART NO.	DESCRIPTION	1D6S	1D6T				REMARKS
1	2C9–2835J–00–P0	BODY, FRONT LOWER 1	1	1				SMX
2	22F–2139X–00	DAMPER	1	1				
3	4XY–2139X–00	DAMPER	1	1				
4	90110–06202	BOLT, HEXAGON SOCKET HEAD	2	2				
5	90480–10289	GROMMET	2	2				
6	90387–066Y6	COLLAR	2	2				
7	90179–05523	NUT	1	1				
8	4XY–2835N–00	BODY, REAR 1	1	1				
9	90149–05299	SCREW	1	1				
10	90269–06062	RIVET	2	2				
11	4XY–2842M–00	COVER 1	1	1				
12	90183–05024	NUT, SPRING	1	1				
13	90154–05013	SCREW, BINDING	1	1				
14	98907–05010	SCREW, BIND	1	1				
15	4XY–28418–01	GUARD, ENGINE 1	1	1				
16	92017–10030	BOLT, BUTTON HEAD	1	1				
17	90480–11224	GROMMET	1	1				
18	2C9–2835K–00–P0	BODY, FRONT UNDER 2	1	1				SMX
19	22F–2139X–00	DAMPER	1	1				
20	4XY–2139X–00	DAMPER	1	1				
21	90110–06202	BOLT, HEXAGON SOCKET HEAD	2	2				
22	90480–10289	GROMMET	2	2				
23	90387–066Y6	COLLAR	2	2				
24	90179–05523	NUT	1	1				
25	4XY–2835R–00	BODY, REAR 2	1	1				
26	90149–05299	SCREW	1	1				
27	90269–06062	RIVET	2	2				

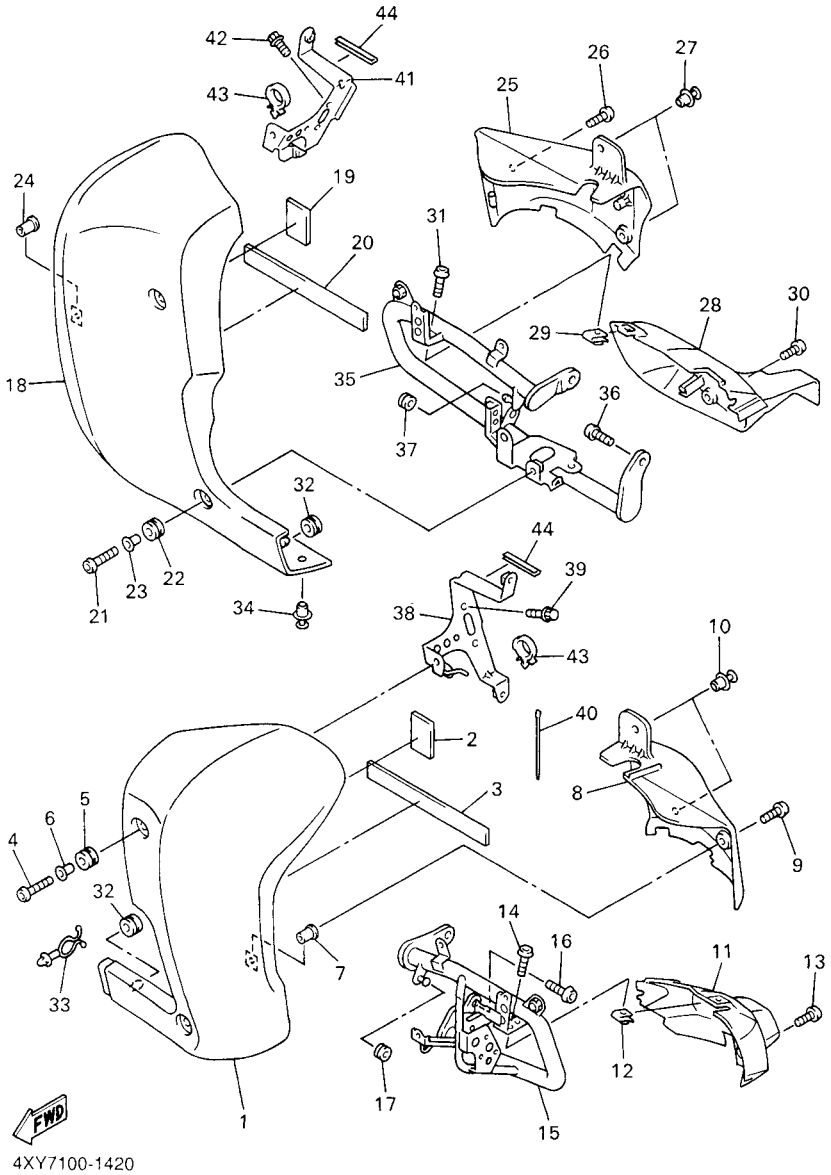

FIG. 41 COWLING 2

REF. NO.	PART NO.	DESCRIPTION	1D6S	1D6T				REMARKS
28	4XY–2842N–00	COVER 2	1	1				
29	90183–05024	NUT, SPRING	1	1				
30	90154–05013	SCREW, BINDING	1	1				
31	98907–05010	SCREW, BIND	1	1				
32	90480–01558	GROMMET	2	2				
33	90464–18269	CLAMP	1	1				
34	90269–07076	RIVET	1	1				
35	4XY–28419–00	GUARD, ENGINE 2	1	1				
36	92017–10030	BOLT, BUTTON HEAD	1	1				
37	90480–11224	GROMMET	1	1				
38	4XY–2831T–01	STAY, SUPPORT 1	1	1				
39	95807–06010	BOLT, FLANGE	2	2				
40	90465–10098	CLAMP	1	1				
41	4XY–2832T–01	STAY, SUPPORT 2	1	1				
42	95807–06010	BOLT, FLANGE	2	2				
43	90464–07209	CLAMP	2	2				
44	4XY–28347–00	MOLE 3	2	2				

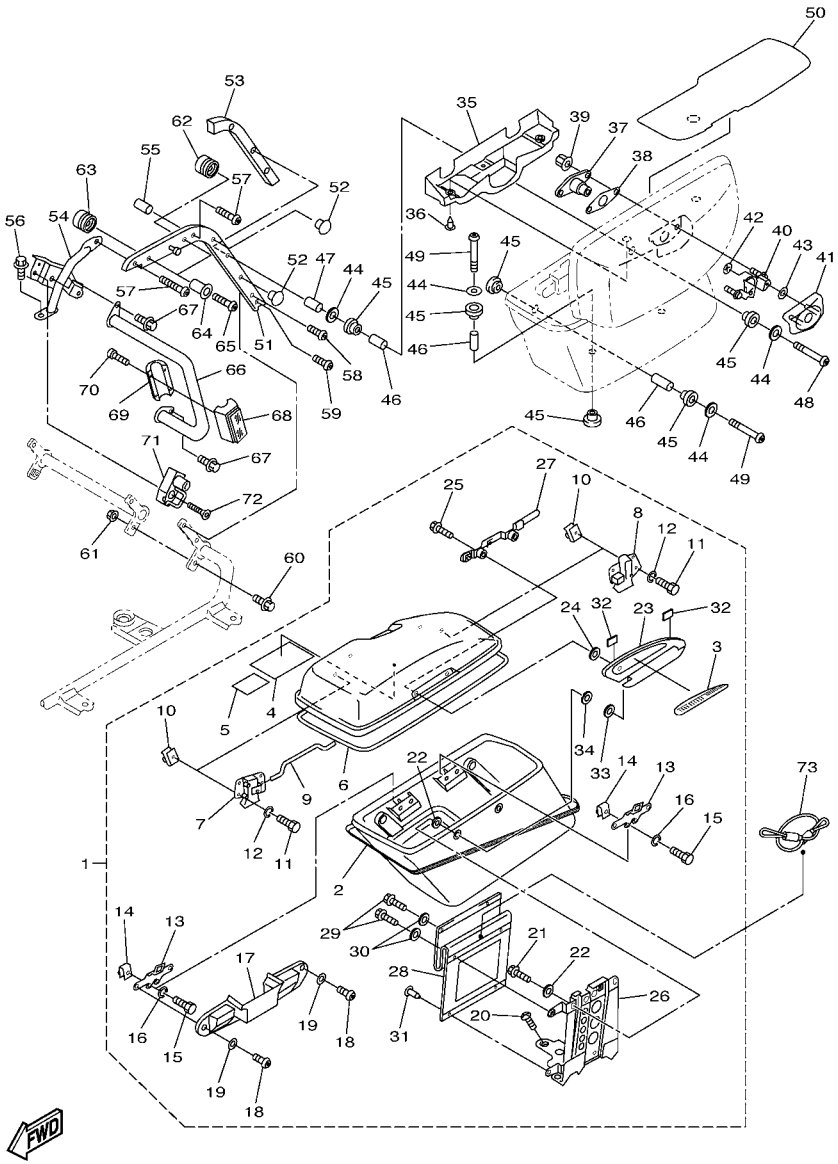

1D6N110-H420

FIG. 42 SADDLEBAG 1

REF. NO.	PART NO.	DESCRIPTION	1D6S	1D6T				REMARKS
1	4XY–Y2843–3J–5Y	SADDLEBAG COMP, 1	1	1				DBNM8/SMX
2	1D6–2840G–70	.SADDLEBAG GRAPHIC SET	1	1				
3	1D6–2847A–00	.ORNAMENT 1	1	1				
4	1D6–28446–00	.LABEL, CAUTION	1	1				
5	4NK–21668–A0	.LABEL, TIRE	1	1				
6	4XY–28428–00	.SEAL 1	1	1				
7	4XY–28494–00	.HOOK 3	1	1				
8	4XY–28495–00	.HOOK 4	1	1				
9	4XY–2841A–00	.LEVER	1	1				
10	90183–05024	.NUT, SPRING	4	4				
11	97007–05012	.BOLT	4	4				
12	92907–05600	.WASHER, PLATE	4	4				
13	4XY–28498–00	.HOOK 2	2	2				
14	90183–05024	.NUT, SPRING	4	4				
15	97007–05016	.BOLT	4	4				
16	92907–05600	.WASHER, PLATE	4	4				
17	4XY–2843J–00	.COVER 3	1	1				
18	92017–05008	.BOLT, BUTTON HEAD	4	4				
19	92907–05600	.WASHER, PLATE	4	4				
20	97707–50020	.SCREW, TAPPING	4	4				
21	92017–05014	.BOLT, BUTTON HEAD	2	2				
22	90201–054K4	.WASHER, PLATE	4	4				
23	4XY–28444–10	.HINGE 1	1	1				
24	90202–08125	.WASHER, PLATE	2	2				
25	92017–05020	.BOLT, BUTTON HEAD	2	2				
26	4XY–28427–00	.REINFORCEMENT 1	1	1				
27	4XY–2847H–00	.PLATE 5	1	1				

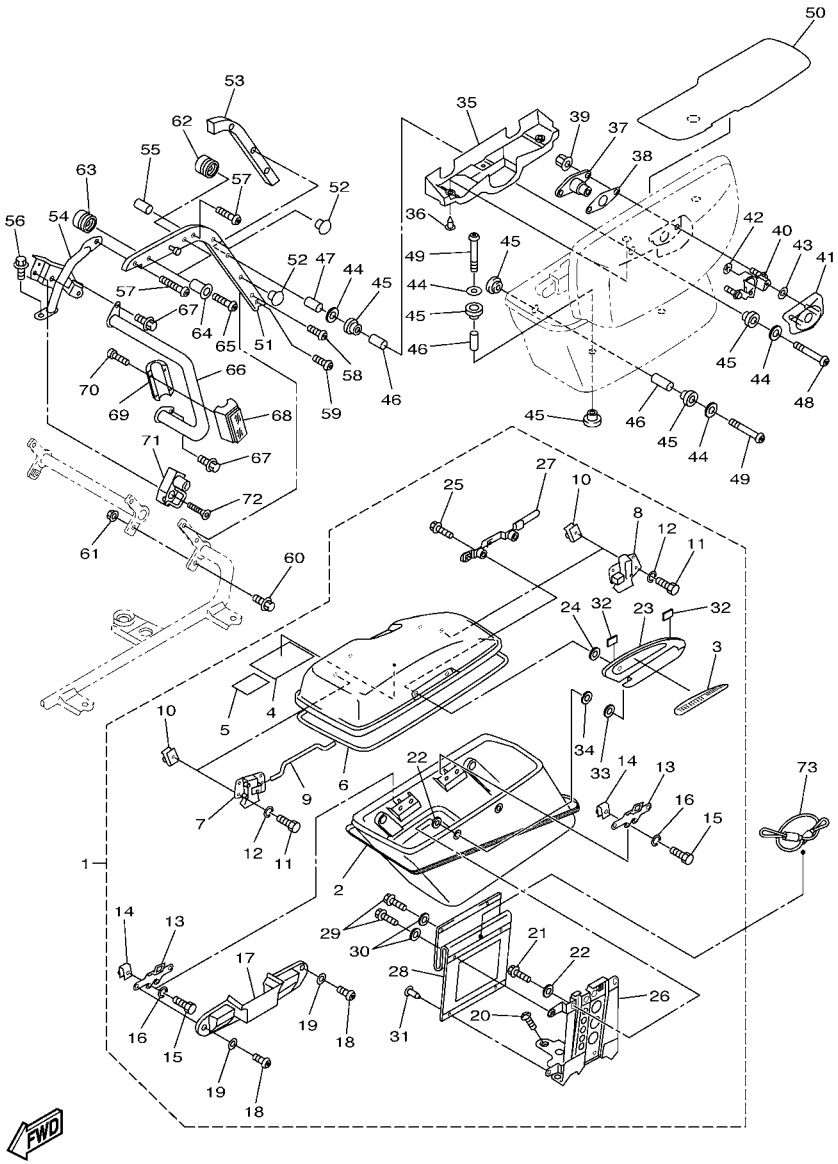

1D6N110-H420

FIG. 42 SADDLEBAG 1

REF. NO.	PART NO.	DESCRIPTION	1D6S	1D6T				REMARKS
28	4XY–2845B–00	.STOPPER, OPEN	1	1				
29	92017–05014	.BOLT, BUTTON HEAD	4	4				
30	92907–05600	.WASHER, PLATE	4	4				
31	90269–05039	.RIVET	2	2				
32	4XY–28499–00	.PLATE, RUBBER 4	2	2				
33	90201–08326	.WASHER, PLATE	2	2				
34	4XY–28429–00	.SEAL 2	2	2				
35	4XY–2849K–00	COVER LOCK ASSY 2	1	1				
36	90269–06081	RIVET	3	3				
37	4XY–W2843–00	LOCK ASS'Y 3	1	1				
38	4XY–2845J–00	PLATE, RUBBER 5	1	1				
39	95607–05200	NUT, U FLANGE	2	2				
40	4XY–2849H–00	PLATE 6	1	1				
41	4XY–2842A–00	COVER 5	1	1				
42	90183–04005	NUT, SPRING	2	2				
43	4KJ–28371–00	DAMPER	2	2				
44	90201–065G8	WASHER, PLATE	5	5				
45	90480–20447	GROMMET	8	8				
46	90387–084R5	COLLAR	4	4				
47	90387–0811N	COLLAR	1	1				
48	92017–06055	BOLT, BUTTON HEAD	1	1				
49	92017–06035	BOLT, BUTTON HEAD	3	3				
50	4XY–2848K–01	SEAT 2	1	1				
51	1D6–28473–00	FRAME, SADDLEBAG 1	1	1				
52	90338–07259	PLUG	2	2				
53	1D6–28415–00	DAMPER 1	1	1				
54	1D6–28413–00	STAY, FRONT GUARD 1	1	1				

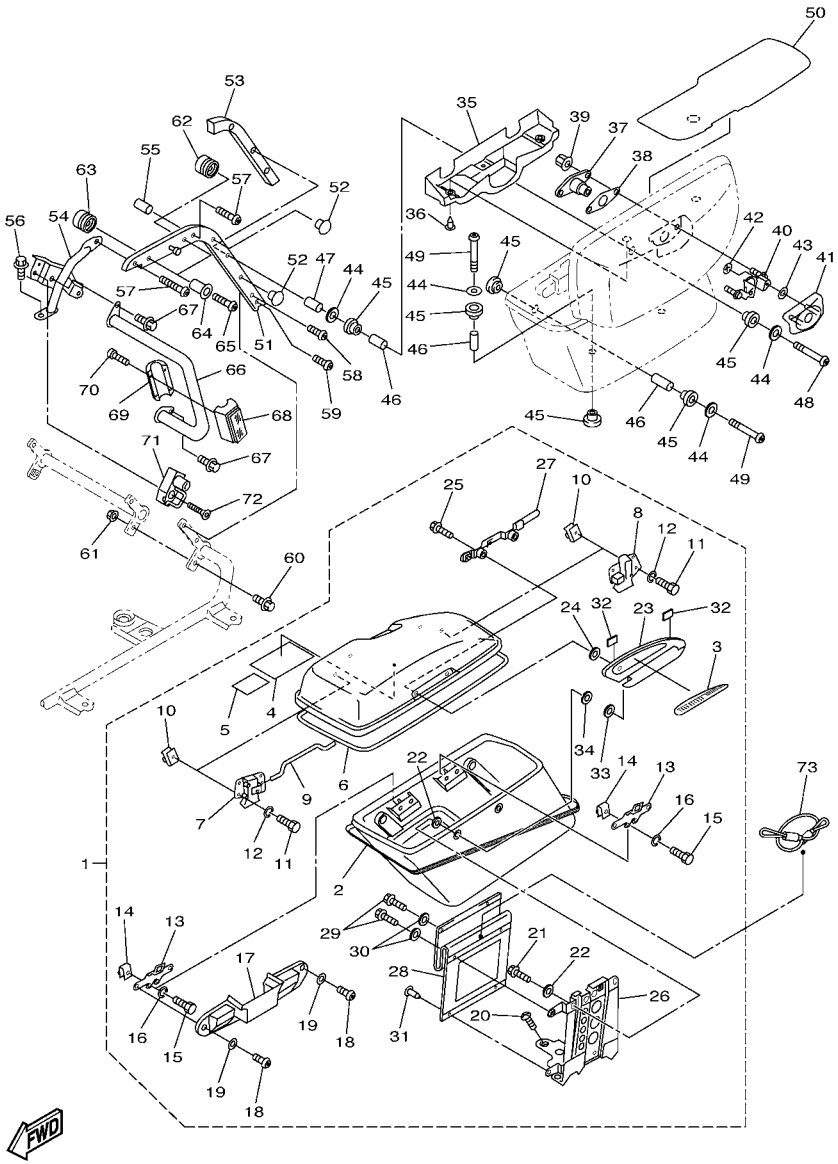

1D6N110-H420

FIG. 42 SADDLEBAG 1

REF. NO.	PART NO.	DESCRIPTION	1D6S	1D6T				REMARKS
55	90387–0811N	COLLAR	1	1				
56	95807–08014	BOLT, FLANGE	1	1				
57	90111–08021	BOLT,HEX. SOCKET BUTTON	2	2				
58	92014–08016	BOLT, BUTTON HEAD	1	1				
59	92014–08020	BOLT, BUTTON HEAD	1	1				
60	95827–08016	BOLT, FLANGE	1	1				
61	95307–08800	NUT	1	1				
62	1D6–2843A–00	DAMPER, GRIP	1	1				
63	1D6–2843N–00	DAMPER,GRIP 2	1	1				
64	90387–08029	COLLAR	2	2				
65	90111–08014	BOLT,HEX. SOCKET BUTTON	2	2				
66	4XY–2841K–00	GUARD, SADDLEBAG 1	1	1				
67	95814–08016	BOLT, FLANGE	2	2				
68	4YE–85131–00	REFLECTOR, REAR 1	1	1				
69	4YE–85132–00	BRACKET, REFLECTOR 1	1	1				
70	97707–30514	SCREW, TAPPING	4	4				
71	4R8–21308–01	HELMET HANGER ASSY	1	1				
72	90151–06018	SCREW, COUNTERSUNK	1	1				
73	4HC–21398–00	HANGER, HELMET	1	1				

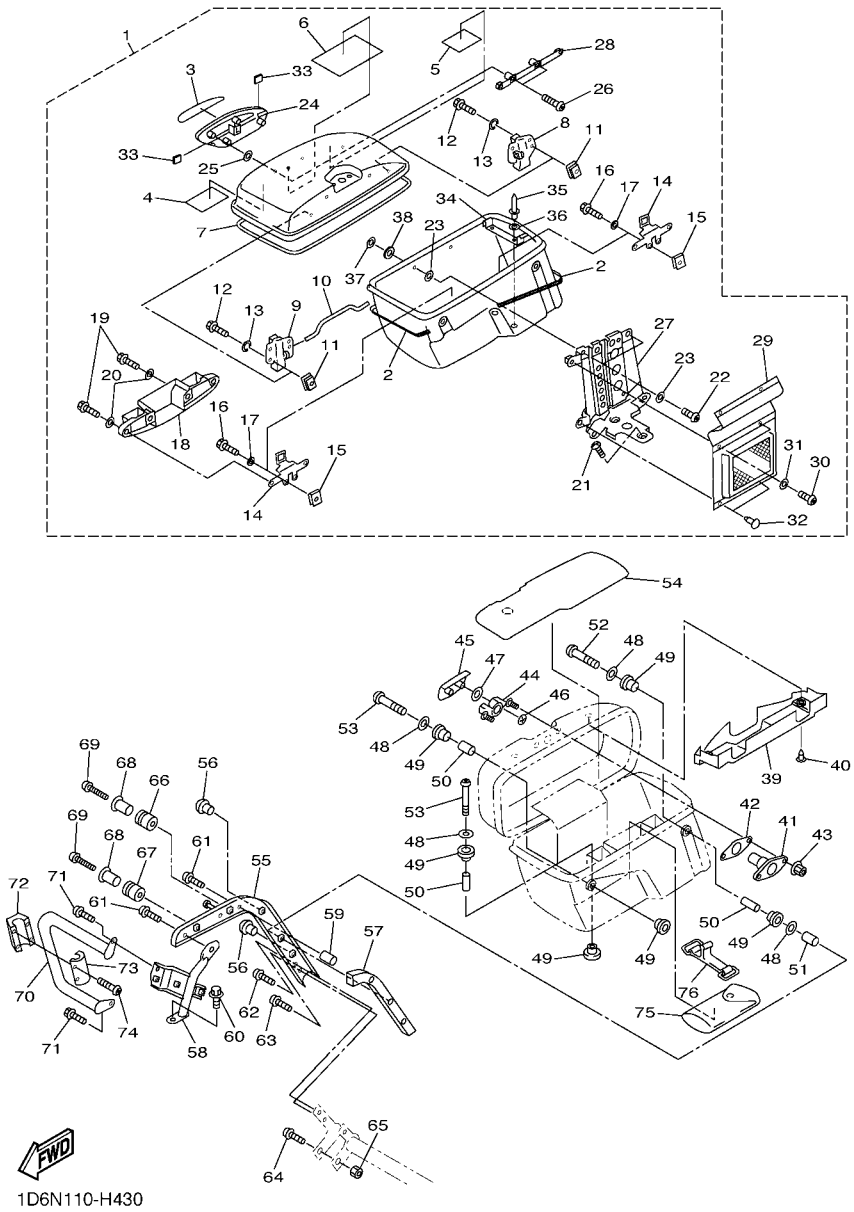

FIG. 43 SADDLEBAG 2

REF. NO.	PART NO.	DESCRIPTION	1D6S	1D6T				REMARKS
1	4XY–Y2844–3U–4Y	SADDLEBAG COMP, 2	1					DBNM8/SMX
	4XY–Y2844–3V–4Y	SADDLEBAG COMP, 2		1				DBNM8/SMX
2	1D6–2840J–70	.SADDLEBAG GRAPHIC SET 2	1	1				
3	1D6–2847B–00	.ORNAMENT 2	1	1				
4	1D6–2179W–30	.PLATE, EPA (NON CALIFORNIA)	1					
	1D6–2176P–21	.PLATE, EPA (CALIFORNIA)		1				
5	4LE–21686–A0	.PLATE, ROUTING 2		1				
6	1D6–28446–00	.LABEL, CAUTION	1	1				
7	4XY–28428–00	.SEAL 1	1	1				
8	4XY–28494–00	.HOOK 3	1	1				
9	4XY–28495–00	.HOOK 4	1	1				
10	4XY–2841A–00	.LEVER	1	1				
11	90183–05024	.NUT, SPRING	4	4				
12	97007–05012	.BOLT	4	4				
13	92907–05600	.WASHER, PLATE	4	4				
14	4XY–28498–00	.HOOK 2	2	2				
15	90183–05024	.NUT, SPRING	4	4				
16	97007–05016	.BOLT	4	4				
17	92907–05600	.WASHER, PLATE	4	4				
18	4XY–2843J–00	.COVER 3	1	1				
19	92017–05008	.BOLT, BUTTON HEAD	4	4				
20	92907–05600	.WASHER, PLATE	4	4				
21	97707–50020	.SCREW, TAPPING	4	4				
22	92017–05014	.BOLT, BUTTON HEAD	2	2				
23	90201–054K4	.WASHER, PLATE	4	4				
24	4XY–28454–10	.HINGE 3	1	1				
25	90202–08125	.WASHER, PLATE	2	2				

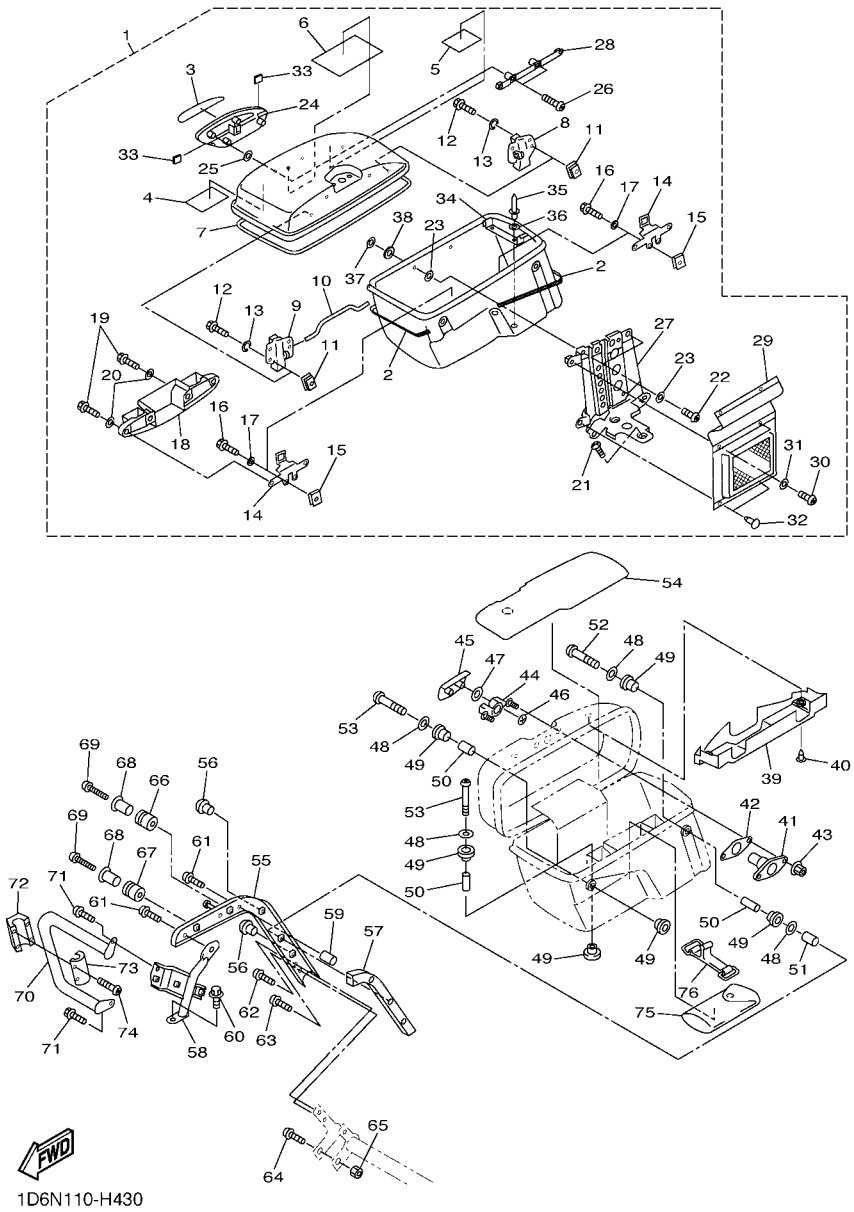

FIG. 43 SADDLEBAG 2

REF. NO.	PART NO.	DESCRIPTION	1D6S	1D6T				REMARKS
26	92017–05020	.BOLT, BUTTON HEAD	2	2				
27	4XY–28437–00	.REINFORCEMENT 2	1	1				
28	4XY–2847H–00	.PLATE 5	1	1				
29	4XY–2845M–00	.STOPPER, OPEN	1	1				
30	92017–05014	.BOLT, BUTTON HEAD	4	4				
31	92907–05600	.WASHER, PLATE	4	4				
32	90269–05039	.RIVET	2	2				
33	4XY–28499–00	.PLATE, RUBBER 4	2	2				
34	4XY–2843L–00	.PLATE	1	1				
35	90267–32109	.RIVET, BLIND	2	2				
36	92907–03600	.WASHER	2	2				
37	90201–08326	.WASHER, PLATE	2	2				
38	4XY–28429–00	.SEAL 2	2	2				
39	4XY–2849K–00	COVER LOCK ASSY 2	1	1				
40	90269–06081	RIVET	3	3				
41	4XY–W2843–00	LOCK ASS'Y 3	1	1				
42	4XY–2845J–00	PLATE, RUBBER 5	1	1				
43	95607–05200	NUT, U FLANGE	2	2				
44	4XY–2849H–00	PLATE 6	1	1				
45	4XY–2843C–00	COVER 6	1	1				
46	90183–04005	NUT, SPRING	2	2				
47	4KJ–28371–00	DAMPER	2	2				
48	90201–065G8	WASHER, PLATE	5	5				
49	90480–20447	GROMMET	8	8				
50	90387–084R5	COLLAR	4	4				
51	90387–0811N	COLLAR	1	1				
52	92017–06055	BOLT, BUTTON HEAD	1	1				

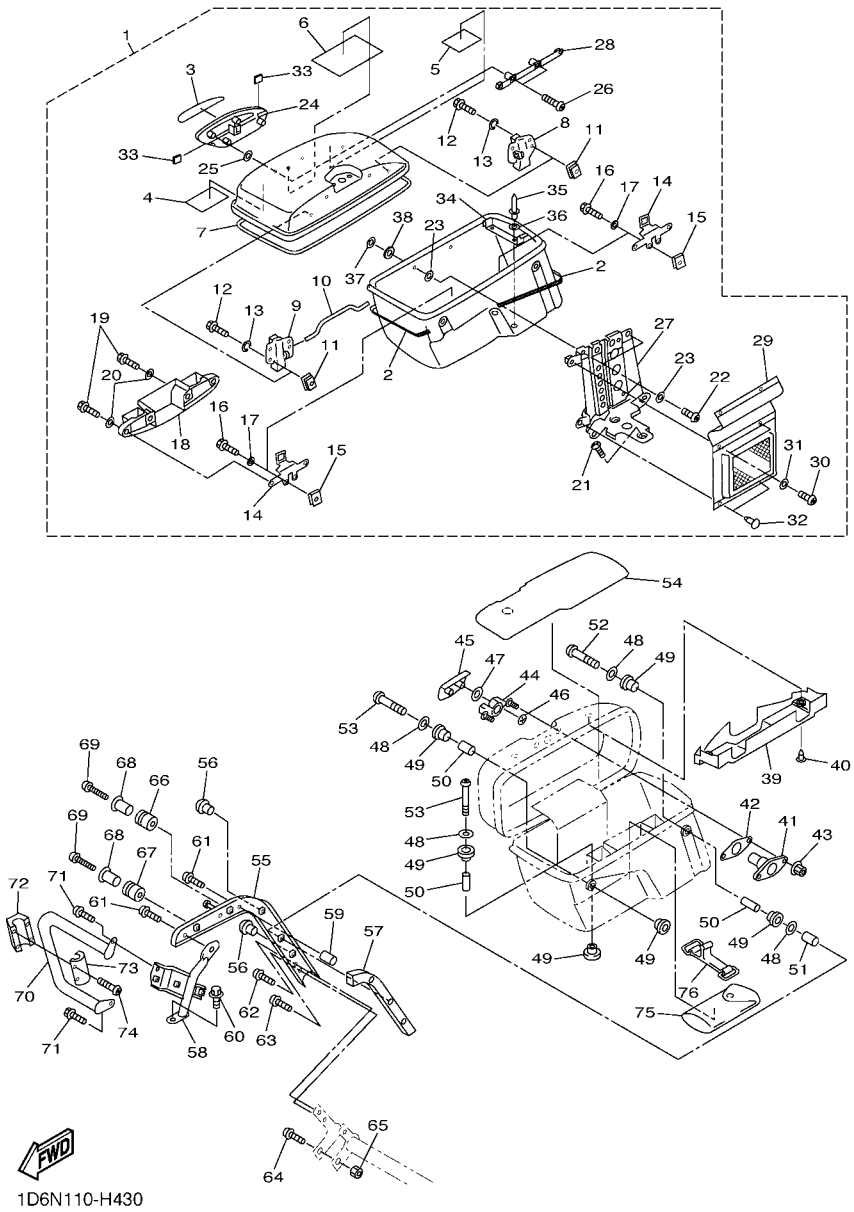

FIG. 43 SADDLEBAG 2

REF. NO.	PART NO.	DESCRIPTION	1D6S	1D6T				REMARKS
53	92017–06035	BOLT, BUTTON HEAD	3	3				
54	4XY–2848K–01	SEAT 2	1	1				
55	1D6–28474–00	FRAME, SADDLEBAG 2	1	1				
56	90338–07259	PLUG	2	2				
57	1D6–28416–00	DAMPER 2	1	1				
58	4YE–28414–02	STAY, FRONT GUARD 2	1	1				
59	90387–0811N	COLLAR	1	1				
60	95807–08014	BOLT, FLANGE	1	1				
61	90111–08021	BOLT,HEX. SOCKET BUTTON	2	2				
62	92014–08016	BOLT, BUTTON HEAD	1	1				
63	92014–08020	BOLT, BUTTON HEAD	1	1				
64	95827–08016	BOLT, FLANGE	1	1				
65	95307–08800	NUT	1	1				
66	1D6–2843A–00	DAMPER, GRIP	1	1				
67	1D6–2843N–00	DAMPER,GRIP 2	1	1				
68	90387–08029	COLLAR	2	2				
69	90111–08014	BOLT,HEX. SOCKET BUTTON	2	2				
70	4XY–2842K–00	GUARD, SADDLEBAG 2	1	1				
71	95814–08016	BOLT, FLANGE	2	2				
72	4YE–85131–00	REFLECTOR, REAR 1	1	1				
73	4YE–85132–00	BRACKET, REFLECTOR 1	1	1				
74	97707–30514	SCREW, TAPPING	4	4				
75	4XY–28100–01	TOOL KIT	1	1				
76	55K–2811G–00	BAND	1	1				

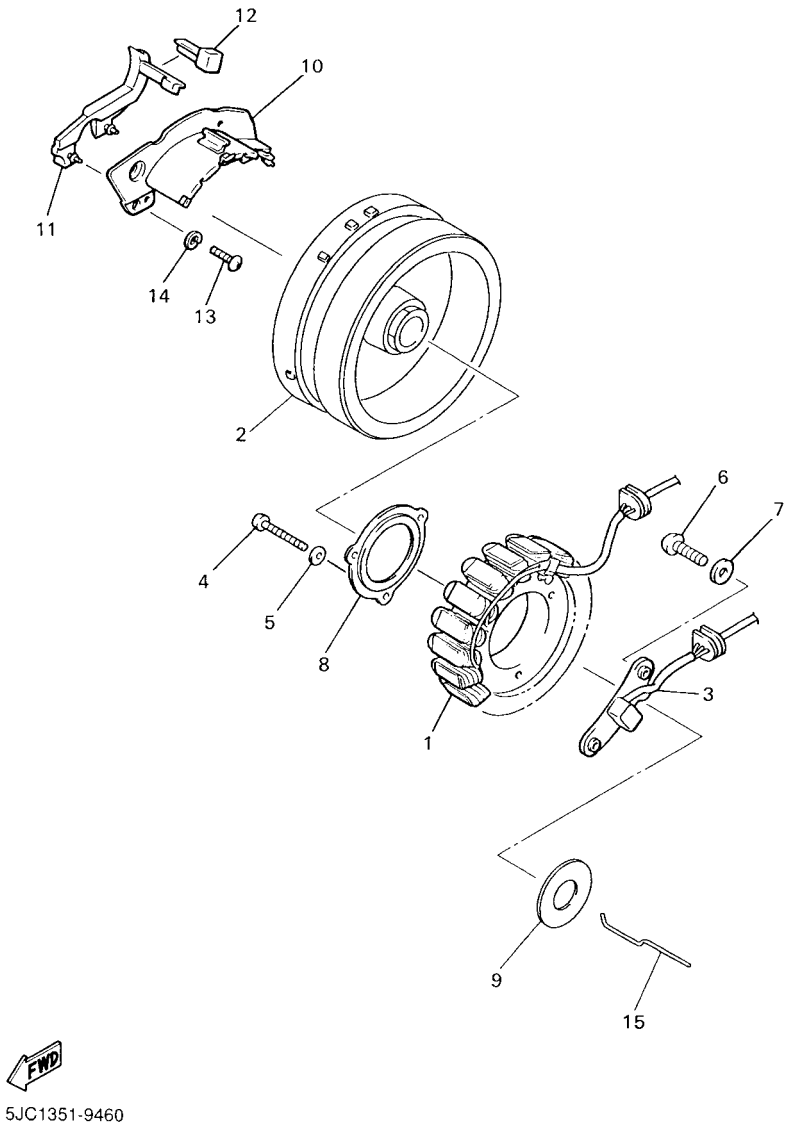

FIG. 44 GENERATOR

REF. NO.	PART NO.	DESCRIPTION	1D6S	1D6T				REMARKS
1	4XY–81410–01	STATOR ASSY	1	1				
2	4XY–81450–00	ROTOR ASSY	1	1				
3	1D6–81670–00	PICK-UP ASSY	1	1				
4	98507–06035	SCREW, PAN HEAD	3	3				
5	92907–06600	WASHER, PLATE	3	3				
6	98507–06016	SCREW, PAN HEAD	2	2				
7	90201–06674	WASHER, PLATE	2	2				
8	4NK–15113–00	PLATE	1	1				
9	59J–15191–00	PLATE	1	1				
10	1FK–15358–00	SEPARATOR, OIL	1	1				
11	1FK–15379–00	SEAL, CRANKCASE	1	1				
12	1FK–15494–00	SEAL, PROTECTOR	1	1				
13	98507–06012	SCREW, PAN HEAD	4	4				
14	92907–06600	WASHER, PLATE	4	4				
15	59J–11455–00	SHAFT 1	1	1				

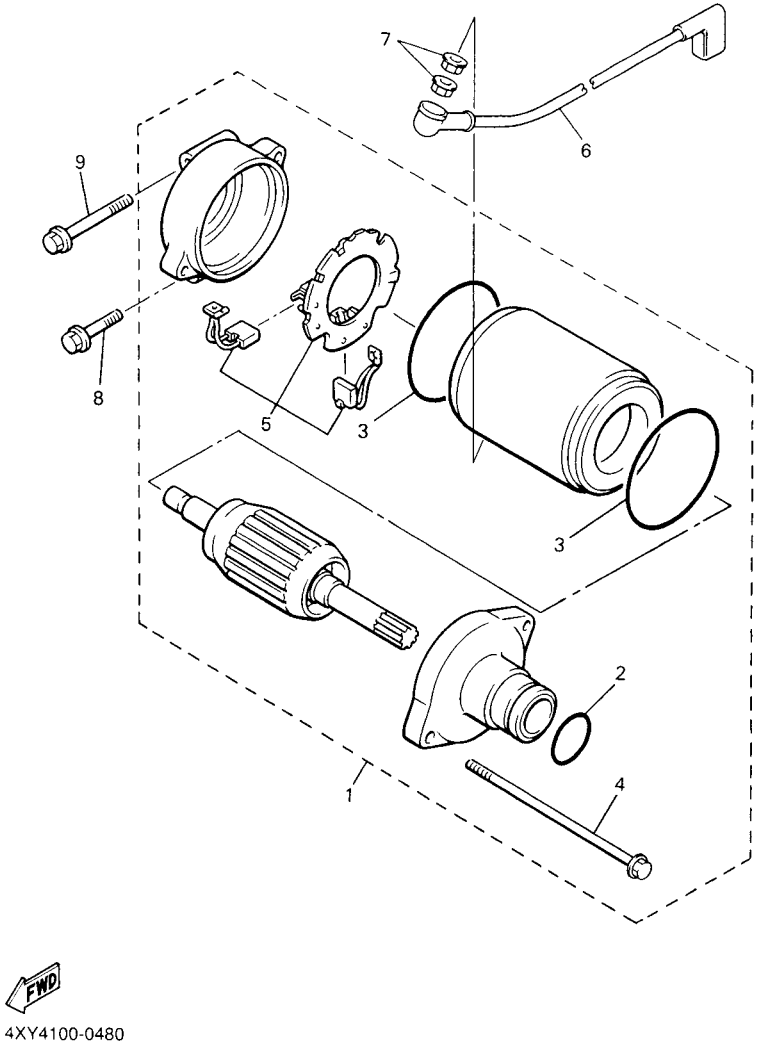

FIG. 45 STARTING MOTOR

REF. NO.	PART NO.	DESCRIPTION	1D6S	1D6T				REMARKS
1	4NK–81890–00	MOTOR ASSY	1	1				
2	1FK–81847–00	.O-RING	1	1				
3	11H–81844–00	.GASKET	2	2				
4	3AJ–81826–00	.BOLT	2	2				
5	3AJ–81801–00	.BRUSH SET	1	1				
6	4NK–81815–00	CORD, STARTER MOTOR	1	1				
7	4XV–8182A–00	NUT	2	2				
8	95827–06025	BOLT, FLANGE	1	1				
9	95827–06055	BOLT, FLANGE	1	1				

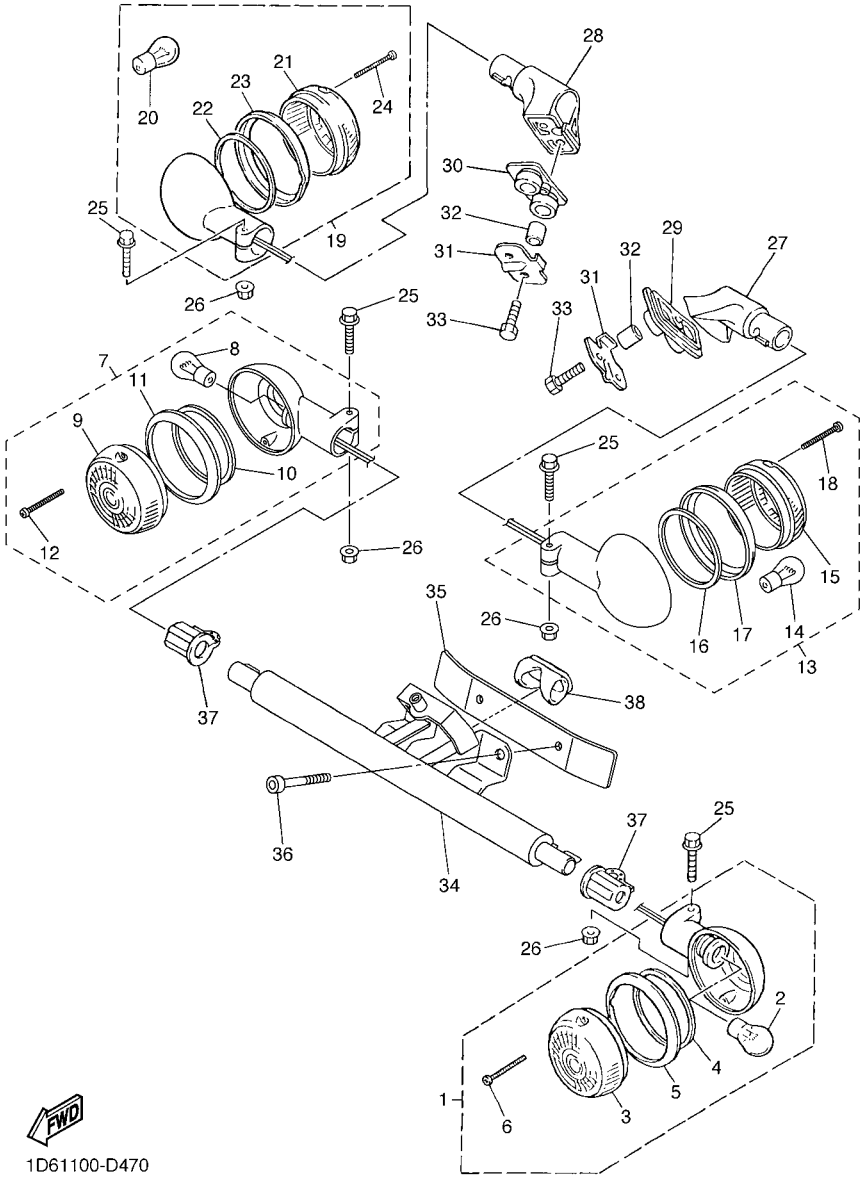

FIG. 46 FLASHER LIGHT

REF. NO.	PART NO.	DESCRIPTION	1D6S	1D6T				REMARKS
1	1D6–83310–00	FRONT FLASHER LIGHT ASSY 1	1	1				
2	5VN–83311–00	.BULB, FLASHER (12V-23/8W)	1	1				
3	5VN–83312–10	.LENS, FLASHER	1	1				
4	1D6–83313–00	.GASKET, FLASHER LENS	1	1				
5	1D6–83363–00	.LENS, RIM	1	1				
6	57M–83358–00	.SCREW, SPECIAL	2	2				
7	1D6–83320–00	FRONT FLASHER LIGHT ASSY 2	1	1				
8	5VN–83311–00	.BULB, FLASHER (12V-23/8W)	1	1				
9	5VN–83312–20	.LENS, FLASHER	1	1				
10	1D6–83313–00	.GASKET, FLASHER LENS	1	1				
11	1D6–83363–10	.LENS, RIM	1	1				
12	57M–83358–00	.SCREW, SPECIAL	2	2				
13	1D6–83330–00	REAR FLASHER LIGHT ASSY 1	1	1				
14	5VN–83311–10	.BULB, FLASHER (12V-21W)	1	1				
15	1D6–83312–20	.LENS, FLASHER	1	1				
16	1D6–83313–00	.GASKET, FLASHER LENS	1	1				
17	1D6–83363–10	.LENS, RIM	1	1				
18	57M–83358–00	.SCREW, SPECIAL	2	2				
19	1D6–83340–00	REAR FLASHER LIGHT ASSY 2	1	1				
20	5VN–83311–10	.BULB, FLASHER (12V-21W)	1	1				
21	1D6–83312–10	.LENS, FLASHER	1	1				
22	1D6–83313–00	.GASKET, FLASHER LENS	1	1				
23	1D6–83363–00	.LENS, RIM	1	1				
24	57M–83358–00	.SCREW, SPECIAL	2	2				
25	95024–06030	BOLT, FLANGE	4	4				
26	90179–06017	NUT	4	4				
27	4YE–83318–00	STAY, FLASHER 1	1	1				

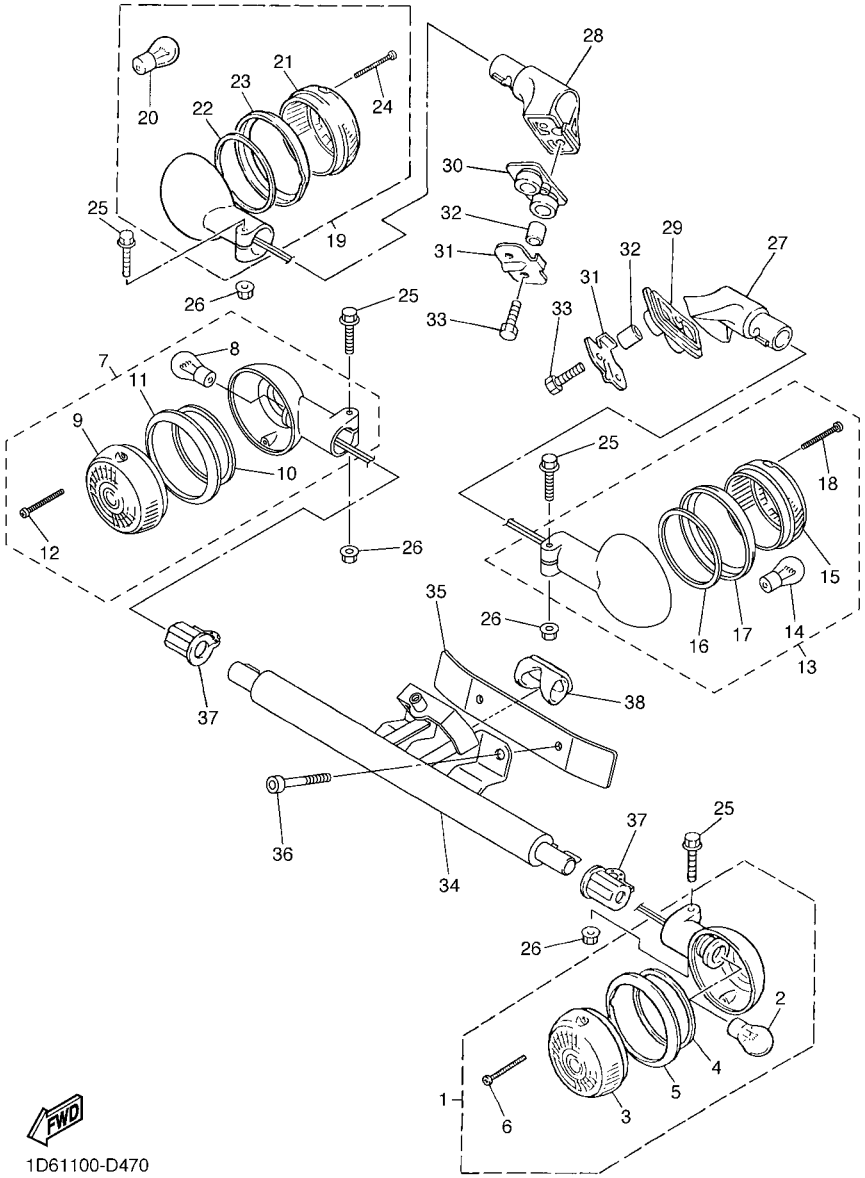

FIG. 46 FLASHER LIGHT

REF. NO.	PART NO.	DESCRIPTION	1D6S	1D6T				REMARKS
28	4YE–83328–00	STAY, FLASHER 2	1	1				
29	4YE–83314–00	BASE, FLASHER 1	1	1				
30	4YE–83324–00	BASE, FLASHER 2	1	1				
31	4YE–8334F–00	WASHER, SPECIAL 8	2	2				
32	90387–064M9	COLLAR	4	4				
33	97007–06020	BOLT	4	4				
34	1D6–2317V–00	STAY 8	1	1				
35	1D6–2317U–00	STAY,7	1	1				
36	91314–08055	BOLT, HEXAGON SOCKET HEAD	2	2				
37	5VN–83321–00	DAMPER, FLASHER 1	2	2				
38	4NK–83345–00	PLUG, BLIND	1	1				

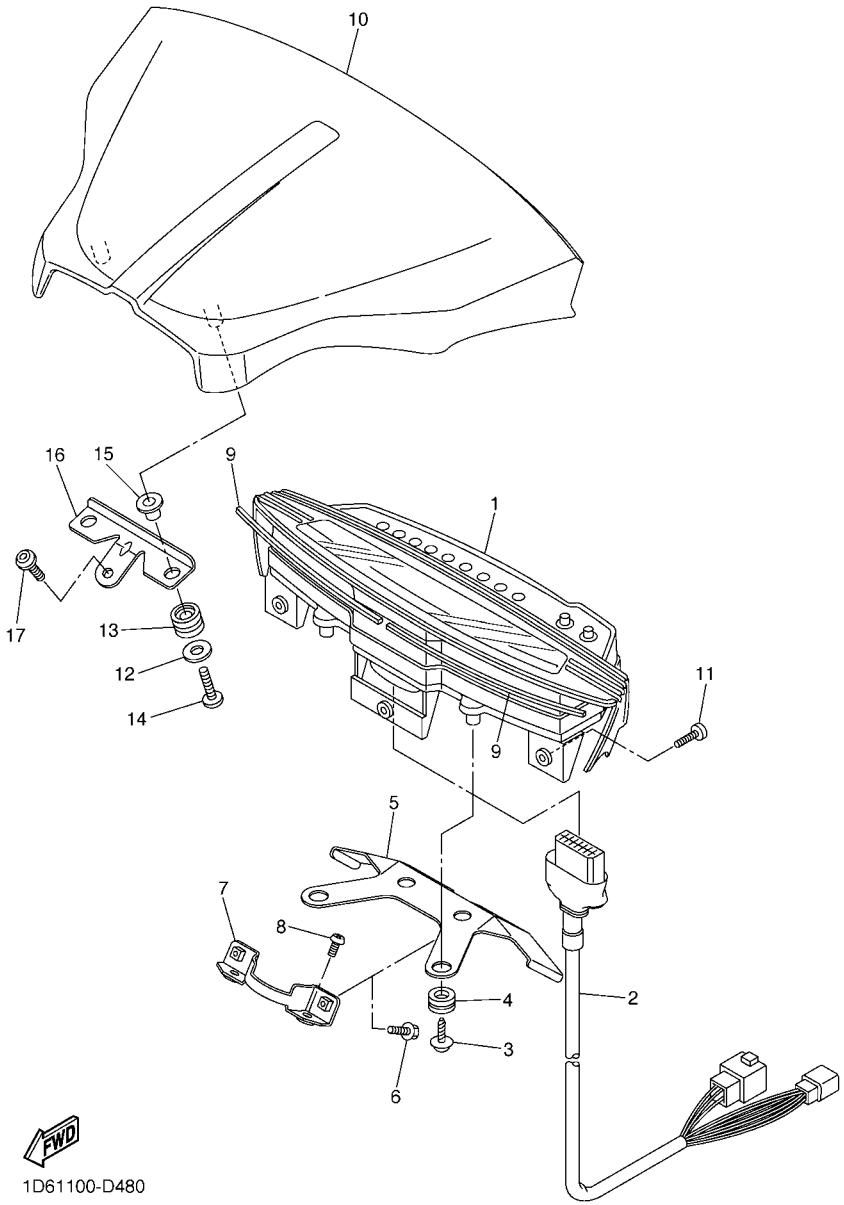

FIG. 47 METER

REF. NO.	PART NO.	DESCRIPTION	1D6S	1D6T				REMARKS
1	1D6–83500–00	SPEEDOMETER ASSY (MPH)	1	1				
2	1D6–83553–00	WIRE, LEAD	1	1				
3	90164–05014	SCREW, TAPPING	4	4				
4	5J0–83513–00	DAMPER	4	4				
5	1D6–8355X–00	BRACKET, METER 1	1	1				
6	95024–06010	BOLT, FLANGE	2	2				
7	1D6–83519–00	BRACKET, METER	1	1				
8	92017–06014	BOLT, BUTTON HEAD	2	2				
9	1D6–83592–00	DAMPER	2	2				
10	1D6–83559–00	COVER, METER	1	1				
11	90154–05064	SCREW, BINDING	3	3				
12	90201–05032	WASHER, PLATE	2	2				
13	4WM–24339–00	GROMMET	2	2				
14	90154–05052	SCREW, BINDING	2	2				
15	90387–050T5	COLLAR	2	2				
16	1D6–8354H–00	PLATE,BRIDGE	1	1				
17	90149–06298	SCREW	1	1				

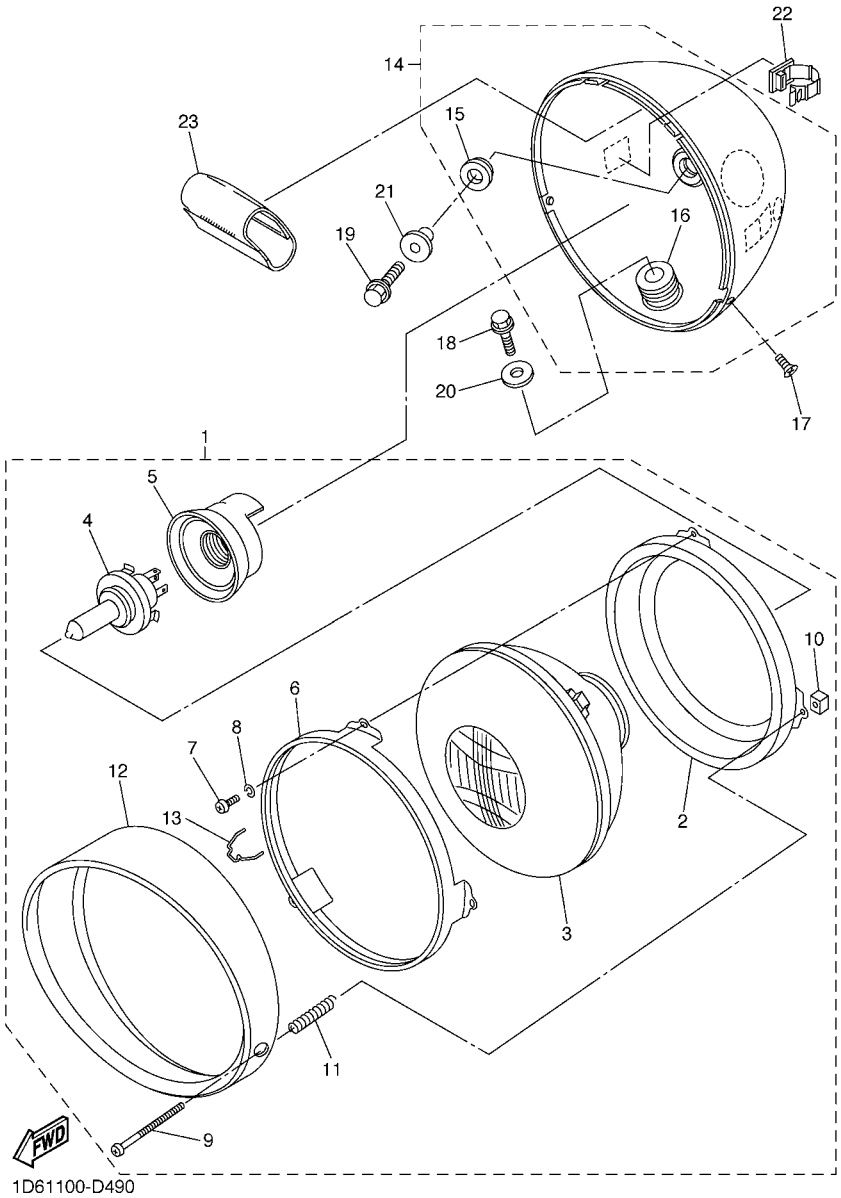

FIG. 48 HEADLIGHT

REF. NO.	PART NO.	DESCRIPTION	1D6S	1D6T				REMARKS
1	1D6–84310–00	HEADLIGHT UNIT ASSY	1	1				
2	1D6–84394–00	.RING, MOUNTING	1	1				
3	4NK–84320–00	.LENS ASSY	1	1				
4	2F9–84314–00	.BULB (12V-60/55W)	1	1				(H4)HALOGEN
5	3SX–84397–00	.COVER, SOCKET	1	1				
6	2F9–84395–00	.RING, RETAINING	1	1				
7	98502–04008	.SCREW, PAN HEAD	3	3				
8	92902–04100	.WASHER, SPRING	3	3				
9	341–84331–60	.SCREW, RIM ADJUSTING	2	2				
10	198–84334–60	.NUT, ADJUSTING	2	2				
11	5G2–84332–60	.SPRING, SCREW	2	2				
12	1D6–84315–00	.RIM, HEADLIGHT	2	2				
13	290–84124–21	.SPRING, SET	1	1				
14	4WM–84330–00	BODY ASSY	1	1				
15	42X–84366–00	.DAMPER, HEADLIGHT 1	2	2				
16	4WM–84366–00	.DAMPER, HEADLIGHT 1	1	1				
17	90152–05005	SCREW, COUNTERSUNK	2	2				
18	95027–06016	BOLT, FLANGE	1	1				
19	95027–06025	BOLT, FLANGE	2	2				
20	90201–060A3	WASHER, PLATE	1	1				
21	90387–06049	COLLAR	2	2				
22	90464–14002	CLAMP	3	3				
23	5VN–8412H–00	STAY SETTING	1	1				

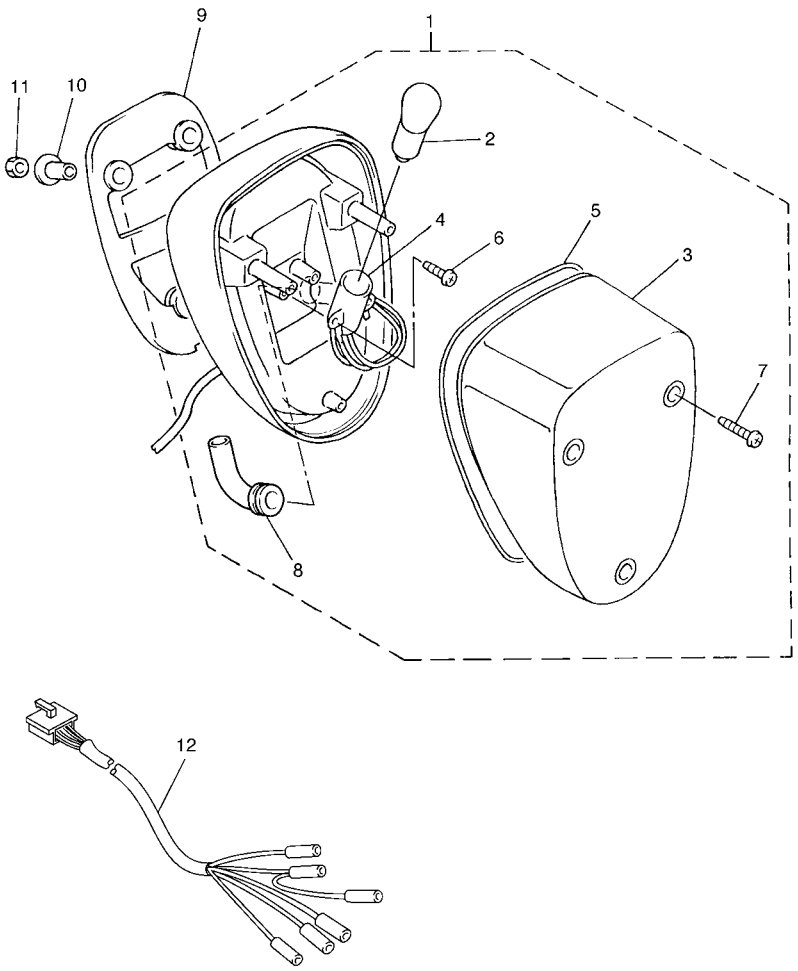

1D61100-D500

FIG. 49 TAILLIGHT

REF. NO.	PART NO.	DESCRIPTION	1D6S	1D6T				REMARKS
1	5BN–84700–01	TAILLIGHT ASSY	1	1				
2	256–84714–60	.BULB (12V-21/5W)	1	1				
3	4NK–84721–00	.LENS, TAILLIGHT	1	1				
4	5BN–84735–00	.CORD ASSY	1	1				
5	4NK–84702–00	.GASKET,TAILLENS	1	1				
6	97707–40516	.SCREW, TAPPING	2	2				
7	97780–40525	.SCREW, TAPPING	3	3				
8	5BN–84154–00	.GROMMET	1	1				
9	4NK–84527–01	DAMPER	1	1				
10	90387–063E6	COLLAR	3	3				
11	95307–06600	NUT	3	3				
12	1D6–84717–00	CORD, TAILLIGHT	1	1				

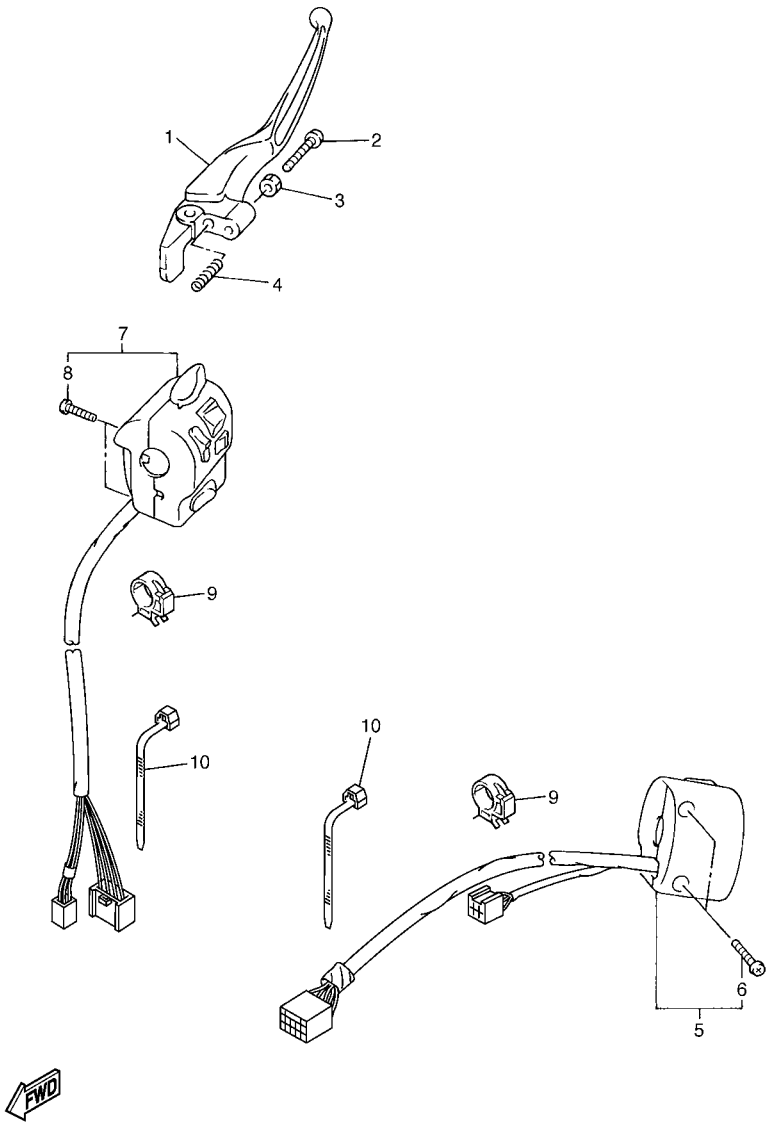

FIG. 50 HANDLE SWITCH & LEVER

REF. NO.	PART NO.	DESCRIPTION	1D6S	1D6T				REMARKS
1	1D6–83922–00	LEVER 2	1	1				
2	90149–06131	SCREW	1	1				
3	90170–06010	NUT	1	1				
4	90501–10510	SPRING, COMPRESSION	1	1				
5	1D6–83973–10	SWITCH, HANDLE 3	1	1				
6	98504–05025	.SCREW, PAN HEAD	2	2				
7	1D6–83969–10	SWITCH, HANDLE 5	1	1				
8	98504–05025	.SCREW, PAN HEAD	2	2				
9	90464–20191	CLAMP	4	4				
10	90464–13073	CLAMP	2	2				

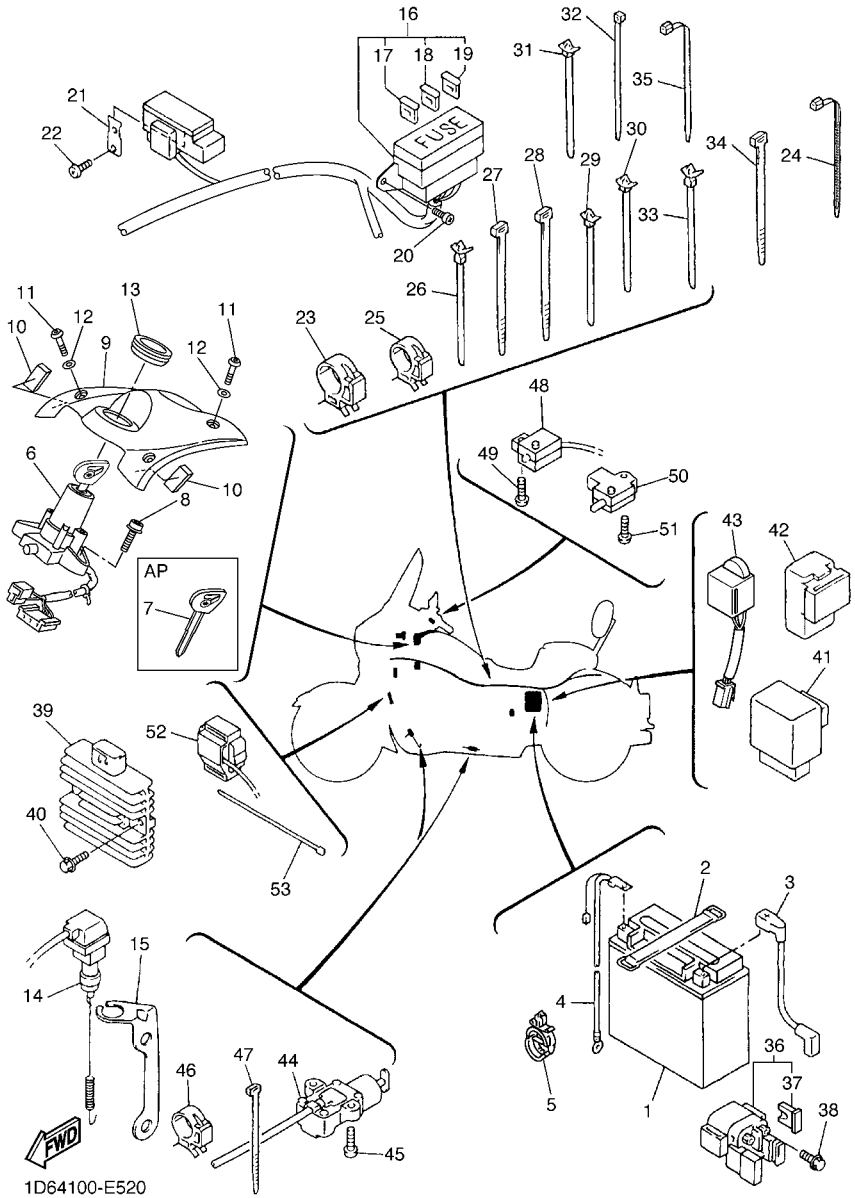

FIG. 51 ELECTRICAL 1

REF. NO.	PART NO.	DESCRIPTION	1D6S	1D6T				REMARKS
1	4SH–82100–22	BATTERY ASSY (YUASA YTX20L-BS)	1	1				
2	120–82131–00	BAND, BATTERY	1	1				
3	4NK–82115–00	WIRE, PLUS LEAD	1	1				
4	1D6–82116–00	WIRE, MINUS LEAD	1	1				
5	90464–18246	CLAMP	1	1				
6	1D6–82501–01	MAIN SWITCH STEERING LOCK	1	1				
7	5PX–82511–09	BLANK KEY	1	1				AP
8	90109–080G5	BOLT	2	2				
9	1D6–8291G–00	COVER, SWITCH	1	1				
10	1D6–82176–00	DAMPER	2	2				
11	90149–05299	SCREW	4	4				
12	90202–05180	WASHER, PLATE	4	4				
13	4XY–82545–00	GROMMET	1	1				
14	4XY–82530–00	STOP SWITCH ASSY	1	1				
15	4XY–82539–00	STAY, STOP SWITCH	1	1				
16	1D6–82590–00	WIRE HARNESS ASSY	1	1				
17	42X–82151–00	.FUSE (10A-BL)	7	7				
18	36Y–82151–00	.FUSE (15A-BL)	3	3				
19	1NL–82151–00	.FUSE (5A-BL)	2	2				
20	98907–06012	SCREW, BIND	2	2				
21	4XY–81953–00	STAY, RELAY	1	1				
22	97707–50016	SCREW, TRUSS HEAD TAPPING	1	1				
23	90464–25217	CLAMP	2	2				
24	90464–15195	CLAMP	2	2				
25	90464–20191	CLAMP	1	1				
26	90464–12036	CLAMP	1	1				
27	1UA–82591–00	BAND	1	1				

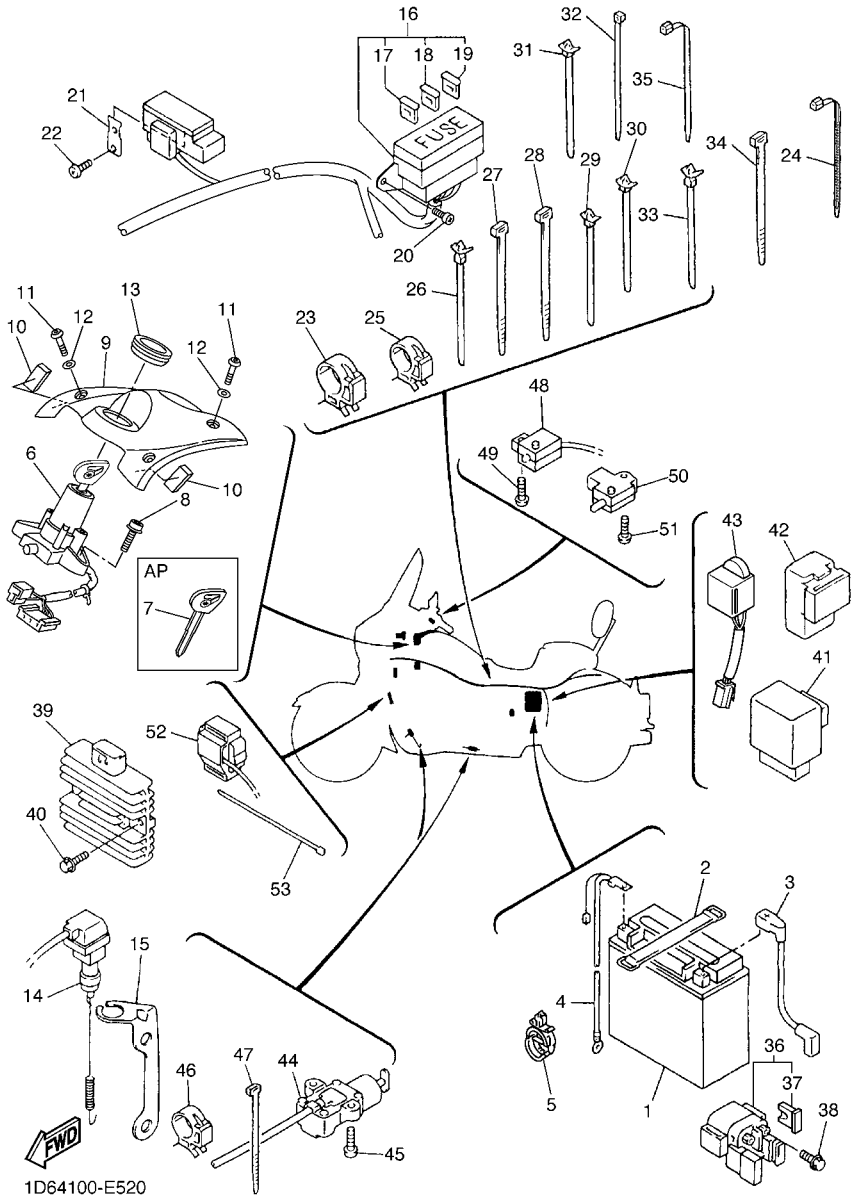

FIG. 51 ELECTRICAL 1

REF. NO.	PART NO.	DESCRIPTION	1D6S	1D6T				REMARKS
28	90464–35132	CLAMP	1	1				
29	90464–12089	CLAMP	4	4				
30	90464–10112	CLAMP	1	1				
31	90464–12036	CLAMP	1	1				
32	90464–16061	CLAMP	4	4				
33	90464–12036	CLAMP	1	1				
34	1UA–82591–00	BAND	2	2				
35	90464–13077	CLAMP	3	3				
36	4BH–81940–02	STARTER RELAY ASSY	1	1				
37	1AE–82151–00	.FUSE (30A-BL)	2	2				
38	95027–06008	BOLT, FLANGE	2	2				
39	4XY–81960–00	RECTIFIER & REGULATOR ASSY	1	1				
40	95807–06020	BOLT, FLANGE	2	2				
41	5KS–81950–00	RELAY ASSY	1	1				FOR SIDE STAND
42	1UY–81950–92	RELAY ASSY	1	1				
43	5FU–82560–60	THERMO SWITCH ASSY	1	1				
44	5RT–82566–50	SWITCH, SIDE STAND	1	1				
45	90157–05079	SCREW, PAN HEAD	2	2				
46	90464–10190	CLAMP	1	1				
47	1UA–82591–00	BAND	2	2				
48	1D6–83980–00	FRONT STOP SWITCH ASSY	1	1				
49	98907–04014	SCREW, BIND	1	1				
50	4XY–82917–00	SWITCH	1	1				
51	98907–04025	SCREW, BIND	1	1				
52	4BH–82576–01	LEAN ANGLE SENSOR	1	1				
53	90464–16061	CLAMP	1	1				

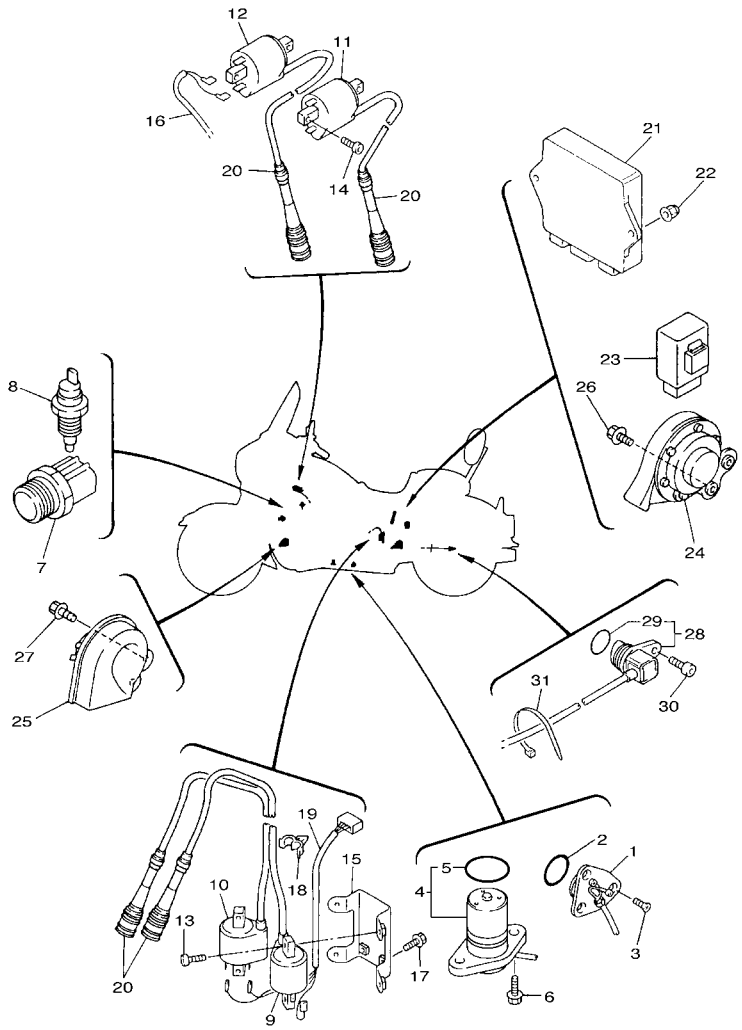

1D6N110-H520

FIG. 52 ELECTRICAL 2

REF. NO.	PART NO.	DESCRIPTION	1D6S	1D6T				REMARKS
1	1D6–82540–00	NEUTRAL SWITCH ASSY	1	1				
2	93210–29196	O-RING	1	1				
3	90149–05321	SCREW	3	3				
4	4XY–85720–00	OIL LEVEL GAUGE ASSY	1	1				
5	4XV–8A8E0–00	.O-RING	1	1				
6	95027–06016	BOLT, FLANGE	2	2				
7	5EB–82560–00	THERMO SWITCH ASSY	1	1				
8	3YX–82560–00	THERMO SWITCH ASSY	1	1				
9	1D6–82310–00	IGNITION COIL ASSY	1	1				
10	1D6–82310–10	IGNITION COIL ASSY	1	1				
11	4XY–82320–10	IGNITION COIL ASSY	1	1				
12	4XY–82320–00	IGNITION COIL ASSY	1	1				
13	91317–05016	BOLT	4	4				
14	97007–05016	BOLT	4	4				
15	4NK–82316–00	BRACKET, IGNITION COIL	1	1				
16	1D6–82309–00	WIRE, SUB LEAD	1	1				
17	95807–06010	BOLT, FLANGE	2	2				
18	90464–09130	CLAMP	1	1				
19	1D6–82509–00	WIRE, SUB LEAD	1	1				
20	4XY–82370–00	PLUG CAP ASSY	4	4				
21	4XY–82305–00	IGNITOR UNIT ASSY	1	1				
22	90176–06065	NUT, CROWN	2	2				
23	4NK–83350–00	FLASHER RELAY ASSY	1	1				
24	4NK–83371–00	HORN	1	1				
25	4XY–83371–00	HORN	1	1				
26	90119–06217	BOLT, WITH WASHER	2	2				
27	95807–06010	BOLT, FLANGE	2	2				

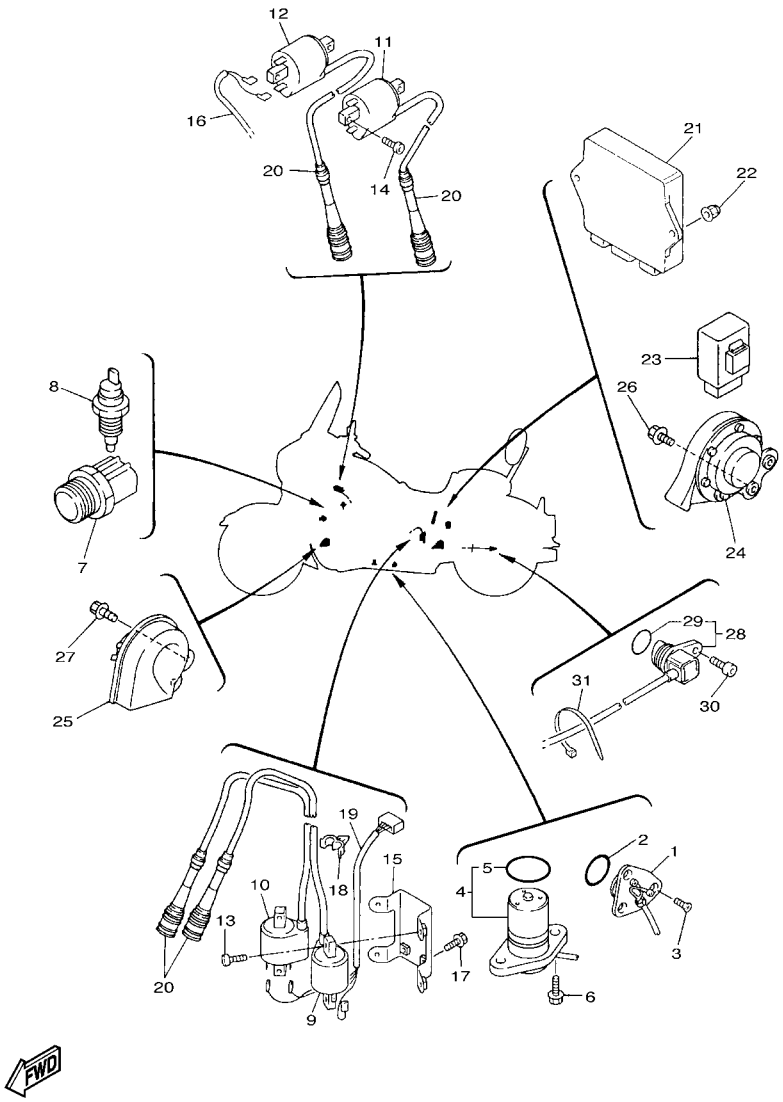

1D6N110-H520

FIG. 52 ELECTRICAL 2

REF. NO.	PART NO.	DESCRIPTION	1D6S	1D6T				REMARKS
28	4NK–83755–01	SENSOR, SPEED	1	1				
29	4NK–85075–00	.O-RING	1	1				
30	90109–081F0	BOLT	1	1				
31	90465–13275	CLAMP	1	1				

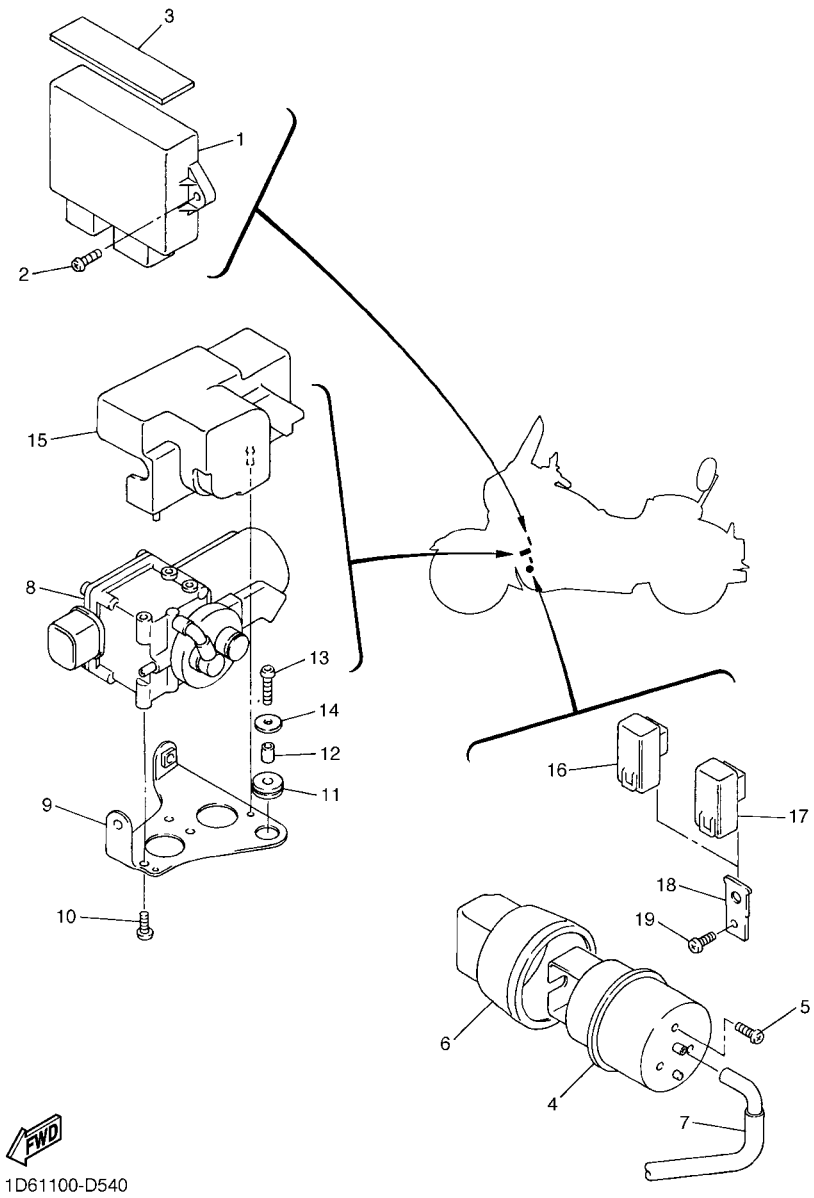

FIG. 53 ELECTRICAL 3

REF. NO.	PART NO.	DESCRIPTION	1D6S	1D6T				REMARKS
1	4XY–85830–01	CONTROL UNIT ASSY	1	1				
2	97707–60016	SCREW, TAPPING	2	2				
3	4XY–2834E–00	DAMPER 3	1	1				
4	4XY–85860–00	VACUUM ACTUATOR	1	1				
5	97707–50016	SCREW, TRUSS HEAD TAPPING	3	3				
6	4XY–85825–00	COVER, WIRE	1	1				
7	4XY–2840B–00	PIPE 1	1	1				
8	4XY–85861–00	PUMP, VACUUM	1	1				
9	4XY–28321–00	STAY 1	1	1				
10	97707–50014	SCREW, TRUSS HEAD TAPPING	3	3				
11	90480–15235	GROMMET	3	3				
12	90387–064M9	COLLAR	3	3				
13	92017–06020	BOLT, BUTTON HEAD	3	3				
14	90201–064H0	WASHER, PLATE	3	3				
15	4XY–28365–00	COVER	1	1				
16	1UY–81950–92	RELAY ASSY	1	1				
17	29U–81950–93	RELAY ASSY	1	1				
18	1VJ–81953–00	STAY, RELAY	2	2				
19	97707–50014	SCREW, TRUSS HEAD TAPPING	2	2				

PART NO.	REF. NO.
4XY–11101–41	1 – 1
4XY–11101–51	1 – 13
4KG–1111G–00	1 – 33
4XY–1111H–20	1 – 44
4NK–1111M–00	1 – 47
4NK–1111N–00	1 – 48
4NK–1111P–00	1 – 49
4NK–1111R–00	1 – 50
26H–11133–00	1 – 2
	1 – 14
4NK–11142–00	1 – 54
4NK–11152–00	1 – 53
4XY–11152–00	1 – 55
4XY–11166–00	6 – 31
1NL–11181–02	1 – 26
4NK–11185–20	1 – 41
4NK–11186–20	1 – 36
4XY–11187–20	1 – 39
1D6–1118A–00	1 – 56
4NK–11191–00	1 – 30
	1 – 31
4NK–11193–00	1 – 35
4NK–11195–00	1 – 38
	1 – 43
214–11198–01	5 – 13
	8 – 15
	25 – 25
1D6–11387–00	9 – 53
4XY–11400–00	2 – 1
26H–11413–02	2 – 15
26H–11413–12	2 – 15
26H–11413–22	2 – 15
26H–11413–32	2 – 15
26H–11413–42	2 – 15
26H–11413–52	2 – 15
26H–11413–62	2 – 15
1FK–11416–01	2 – 2
1FK–11416–11	2 – 2
1FK–11416–21	2 – 2
1FK–11416–31	2 – 2
1FK–11416–41	2 – 2
1FK–11416–51	2 – 2
1FK–11416–61	2 – 2
59J–11455–00	44 – 15
1FK–11500–10	2 – 14
1NL–11610–00	2 – 4
1NL–11610–10	2 – 4
1NL–11610–20	2 – 4

PART NO.	REF. NO.
4XY–11631–00–A0	2 – 3
1FK–11633–00	2 – 5
4XY–11635–00	2 – 3
4XY–11636–00	2 – 3
26H–11650–00	2 – 7
26H–11654–00	2 – 8
1FK–11656–00	2 – 10
1FK–11656–10	2 – 10
1FK–11656–20	2 – 10
1FK–11656–30	2 – 10
1FK–11656–40	2 – 10
1FK–11656–50	2 – 10
26H–12111–11	3 – 1
26H–12113–00	3 – 4
26H–12114–00	3 – 5
26H–12116–00	3 – 3
26H–12117–00	3 – 7
4G0–12118–00	3 – 8
4KM–12119–00	3 – 6
26H–12121–11	3 – 2
26H–12153–01	3 – 9
26H–12153–09	3 – 9
26H–12168–00	3 – 10
26H–12168–20	3 – 10
26H–12168–40	3 – 10
26H–12168–60	3 – 10
26H–12168–80	3 – 10
26H–12168–A0	3 – 10
26H–12168–F0	3 – 10
26H–12168–H0	3 – 10
26H–12168–K0	3 – 10
26H–12168–M0	3 – 10
26H–12168–R0	3 – 10
26H–12168–U0	3 – 10
26H–12168–W0	3 – 10
26H–12168–Y0	3 – 10
26H–12169–10	3 – 10
26H–12169–30	3 – 10
26H–12169–50	3 – 10
26H–12169–70	3 – 10
26H–12169–90	3 – 10
26H–12169–E0	3 – 10
26H–12169–G0	3 – 10
26H–12169–J0	3 – 10
26H–12169–L0	3 – 10
26H–12169–N0	3 – 10
26H–12169–T0	3 – 10
4XY–12171–00	4 – 1

PART NO.	REF. NO.
4XY–12176–00	4 – 4
4XY–12177–00	4 – 3
4XY–12181–00	4 – 2
26H–12210–03	4 – 13
3JP–12213–01	4 – 14
26H–12233–00	4 – 11
26H–12241–00	4 – 8
26H–12251–00	4 – 9
26H–12252–00	4 – 10
1D6–12405–00	6 – 4
1AE–12410–00	5 – 26
4XY–12413–00	5 – 27
4XY–12417–00	5 – 23
4NK–12420–03	5 – 1
26H–12427–00	6 – 30
26H–12428–00	6 – 28
1AA–12435–00	6 – 6
11H–12438–10	5 – 8
4NK–12449–00	5 – 16
4XY–1244E–00	5 – 25
1FK–12450–00	5 – 2
26H–12459–00	5 – 4
4XY–12461–00	6 – 3
3XP–12462–00	6 – 49
4XY–12465–00	6 – 8
26H–12469–01	1 – 8
	1 – 20
1FK–1246A–10	6 – 26
26H–1246E–20	6 – 27
4XY–12481–00	6 – 45
4XY–12482–00	6 – 50
4XY–12483–00	5 – 20
4XY–12484–00	6 – 37
4XY–12485–00	6 – 19
4XY–12551–00	6 – 42
1AA–12561–00	6 – 5
4XY–12576–00	6 – 16
4XY–12577–00	6 – 24
4XY–12578–00	6 – 1
4XY–12579–00	6 – 22
4XY–12588–00	6 – 40
4XY–12589–00	6 – 35
4NK–12590–00	6 – 48
1FK–13151–00	8 – 32
26H–13161–00	8 – 11
26H–13171–00	8 – 25
26H–13181–03	8 – 19
26H–13300–02	7 – 1

PART NO.	REF. NO.
26H–13325–00	7 – 2
26H–13337–01	8 – 17
26H–13342–00	7 – 7
26H–13351–01	7 – 6
26H–13361–00	7 – 8
3JP–13414–01	8 – 13
26H–13416–01	8 – 27
26H–13417–01	8 – 3
5GH–13440–00	8 – 1
26H–13476–00	8 – 28
353–13552–01	5 – 15
16G–13569–00	9 – 3
4XY–13575–00	9 – 7
4XY–13586–10	9 – 1
4XY–13596–10	9 – 2
4NK–13782–00	8 – 35
1D6–13907–00	29 – 50
4XY–13971–10	9 – 8
4XY–14103–00	11 – 53
4XY–14105–00	11 – 16
4KM–14107–15	11 – 22
4SV–1410A–00	11 – 29
5DM–14112–00	11 – 14
4XY–14118–00	11 – 17
4NK–14137–00	11 – 50
4XY–14137–00	11 – 54
35H–14139–00	11 – 35
4XY–14139–00	11 – 55
4KM–14142–15	11 – 27
354–14147–00	11 – 6
4XY–14148–00	11 – 41
4XY–14148–10	11 – 51
4XY–14159–00	11 – 36
4KP–14191–00	11 – 11
4KM–14194–00	11 – 20
3JD–14197–00	11 – 62
4FU–14197–00	11 – 63
4KM–14216–00	11 – 5
1HX–14231–17	11 – 25
3G2–14231–24	11 – 28
1HX–14231–28	11 – 26
3G2–1423A–74	11 – 28
3G2–1423A–75	11 – 28
4XY–14251–00	11 – 46
4XY–14261–00	11 – 59
4KG–14285–00	11 – 61
4XY–14286–00	11 – 60
3UH–14294–01	11 – 71

PART NO.	REF. NO.
4NK–14327–00	11 – 57
4XY–14349–00	11 – 48
4XY–14349–11	11 – 49
4XY–14349–21	11 – 67
5DM–14396–10	11 – 45
4XY–14411–00	9 – 10
4XY–14417–01	9 – 11
4XY–14418–01	9 – 17
2UJ–14419–00	9 – 27
4XY–1441A–00	9 – 48
4XY–14421–00	9 – 16
4XY–1442A–00	9 – 30
	9 – 40
4XY–14431–02	9 – 29
	9 – 39
4XY–14437–00	9 – 31
	9 – 41
4XY–14451–01	9 – 32
	9 – 42
4XY–14452–00	9 – 33
	9 – 43
4XY–14453–00	9 – 12
	9 – 18
4XY–14454–00	9 – 54
4XY–14455–00	9 – 51
4XY–14457–00	9 – 14
	9 – 20
4XY–14463–00	9 – 49
4XY–14485–00	9 – 22
4XV–14562–00	11 – 24
1FN–14565–00	11 – 23
4WM–14565–00	11 – 38
4XY–14565–00	11 – 56
4XY–14568–00	11 – 65
4KG–14612–01	12 – 23
3GD–14613–00	12 – 25
4YE–14614–00	12 – 1
4NK–14620–01	12 – 2
4G0–14638–00	21 – 28
4NK–14650–01	12 – 7
1D6–14710–00	12 – 26
3XW–14714–00	12 – 27
	12 – 30
4BH–14714–00	12 – 13
	12 – 19
4NK–14714–00	12 – 3
	12 – 8
4KM–14714–01	10 – 1

PART NO.	REF. NO.
4KM–14714–01	10 – 30
1D6–14720–00	12 – 29
4XY–14730–00	12 – 12
4XY–14730–10	12 – 18
36Y–14747–00	21 – 27
4XY–1479H–00	10 – 62
4XY–14808–00	10 – 6
4XY–14808–10	10 – 38
4XY–14829–00	10 – 63
4XY–14840–00	10 – 10
4XY–14840–10	10 – 46
4XY–14855–00	10 – 64
4XY–14857–00	10 – 22
4XY–14857–10	10 – 55
4XY–14858–00	10 – 23
4XY–14858–10	10 – 56
4XY–14868–00	10 – 14
4XY–14872–00	10 – 2
4XY–14873–00	10 – 31
4XY–14874–00	10 – 32
4XY–14875–00	10 – 42
4XY–14881–00	10 – 3
4XY–14881–10	10 – 4
4XY–14882–00	10 – 16
4XY–14882–10	10 – 8
4XY–14883–00	10 – 27
4XY–14884–00	10 – 40
4XY–14884–10	10 – 44
4XY–14885–00	10 – 51
4XY–14886–00	10 – 35
4XY–14886–10	10 – 36
4XY–14887–10	10 – 60
4XY–14901–61	11 – 1
4XY–14901–81	11 – 1
4XY–14902–61	11 – 2
4XY–14902–81	11 – 2
4XY–14903–61	11 – 3
4XY–14903–81	11 – 3
4XY–14904–61	11 – 4
4XY–14904–81	11 – 4
4XY–1490J–00	11 – 15
3EN–1490K–00	11 – 43
4XY–14933–00	11 – 13
5DM–14935–00	11 – 40
3UH–14937–00	11 – 70
5AP–14940–00	11 – 7
5DM–14940–00	11 – 12
4SV–14985–00	11 – 21

PART NO.	REF. NO.
51L–14987–01	11 – 68
3EN–14997–00	11 – 44
4XY–15100–20	13 – 1
26H–15113–00	13 – 28
4NK–15113–00	44 – 8
26H–15138–00	13 – 2
4G0–15138–00	13 – 4
26H–15148–00	13 – 3
4H7–15189–00	13 – 11
4NK–15191–00	14 – 6
59J–15191–00	44 – 9
4NK–15316–00	1 – 37
	1 – 40
	1 – 42
	1 – 45
1FK–15358–00	44 – 10
2H7–15361–00	13 – 34
2H7–15363–00	14 – 23
4NK–15363–00	13 – 35
26H–15365–00	8 – 8
26H–15366–01	8 – 9
26H–15373–00	13 – 39
1FK–15379–00	44 – 11
26H–15381–00	13 – 29
26H–15383–00	13 – 31
4NK–15411–00	14 – 1
4NK–15421–00	14 – 13
4NK–15423–00	14 – 15
4NK–15427–00	14 – 10
4NK–15431–00	14 – 22
4NK–15451–00	14 – 2
3JP–15461–01	14 – 14
4NK–15462–00	14 – 25
1FK–15494–00	44 – 12
26H–15512–00	15 – 4
26H–15514–00	15 – 1
26H–15515–00	15 – 2
4NK–15517–00	15 – 6
26H–15521–00	15 – 5
26H–15522–00	15 – 3
4XY–15541–00	13 – 6
4XY–15542–00	13 – 10
4NK–15590–00	15 – 7
26H–16150–10	16 – 1
26H–16154–00	16 – 2
26H–16307–01	16 – 9
26H–16321–01	16 – 7
26H–16324–00	16 – 8

PART NO.	REF. NO.
26H–16324–00	16 – 10
1FK–16334–00	16 – 12
1FK–16335–00	16 – 13
132–16346–00	20 – 7
1FK–16351–00	16 – 11
1FK–16352–00	16 – 14
4KG–16356–00	16 – 19
4NK–16357–00	16 – 21
4XY–16371–00	16 – 3
1FK–16381–11	16 – 27
1FK–16383–00	16 – 6
26H–16384–00	16 – 5
26H–16385–00	16 – 4
4NK–1638A–00	16 – 32
26H–16399–00	16 – 24
4XY–17121–00	17 – 5
4XY–17141–00	17 – 2
4XY–17151–00	17 – 6
4XY–17211–00	17 – 21
4XY–17221–00	17 – 14
4XY–17231–00	17 – 17
4XY–17241–00	17 – 20
4XY–17251–00	17 – 13
4NK–17402–00	17 – 12
4XY–17411–00	17 – 1
2WE–17524–00	18 – 1
2WE–17527–00	18 – 3
3UF–17531–00	18 – 20
4X7–17531–00–15	18 – 9
4X7–17531–00–30	18 – 9
4X7–17531–00–40	18 – 9
4X7–17531–00–50	18 – 9
3UF–17531–10	18 – 20
3UF–17531–20	18 – 20
3UF–17531–30	18 – 20
3UF–17531–40	18 – 20
3UF–17531–50	18 – 20
1J7–17537–Y0–30	25 – 14
1J7–17537–Y0–40	25 – 14
1J7–17537–Y0–50	25 – 14
26H–17551–00	18 – 17
26H–17556–00	18 – 14
2H7–17571–01	18 – 12
56W–17590–00	25 – 23
4NK–18101–01	20 – 10
4XY–18110–00	20 – 15
4NK–18113–10	20 – 16
4NK–18115–00	20 – 23

PART NO.	REF. NO.
26H–18140–02	20 – 5
4NK–18141–00	19 – 5
4NK–18150–02	20 – 26
4NK–18151–01	20 – 28
2H9–18154–00	20 – 17
	20 – 27
4NK–18185–00	19 – 6
4NK–18197–01	20 – 20
4NK–18511–00	19 – 14
4NK–18512–00	19 – 15
4NK–18513–00	19 – 16
4NK–18531–00	19 – 17
26H–18536–00	20 – 1
4NK–18540–03	19 – 1
4UN–18542–00	19 – 10
4UN–18566–00	19 – 11
1D6–21110–00	21 – 1
4XY–21150–00–33	21 – 5
52W–2117G–00	23 – 13
4XY–2117M–00	21 – 17
4XY–2117X–00–P9	23 – 12
5GK–2118K–00	29 – 45
4XY–21190–02	21 – 15
4XY–21228–00	39 – 27
4NK–21243–01	23 – 37
1D6–21268–00	23 – 39
4KB–21268–00	23 – 38
46X–21269–00	23 – 40
4R8–21308–01	42 – 71
4XY–21315–20	21 – 34
4XY–21316–20	21 – 35
4HC–21398–00	42 – 73
22F–2139X–00	23 – 24
	41 – 2
	41 – 19
4XY–2139X–00	41 – 3
	41 – 20
4XY–2141V–01	21 – 7
4XY–21445–00	21 – 23
4XY–21446–00	21 – 24
4YE–2144F–01	21 – 25
4X7–2149Y–00	9 – 26
1D6–2153E–00	22 – 7
1D6–21570–70	22 – 2
5EJ–21610–00–P4	22 – 4
4NK–21621–00–PA	22 – 10
42U–21639–00	22 – 23
51Y–21639–00	23 – 2

PART NO.	REF. NO.
51Y–21639–00	23 – 7
1D6–2163A–00	30 – 23
1D6–2163E–00	30 – 24
1D6–21640–00	30 – 22
4NK–21649–00	22 – 8
5GA–2164G–00	30 – 27
4NK–21668–A0	42 – 5
4LE–21686–A0	43 – 5
1D6–216A0–00	30 – 18
1D6–216A1–00	30 – 25
1D6–216B0–00	30 – 20
4NK–21711–00–P9	23 – 1
4XY–2171E–00	21 – 19
4XY–2171X–00	21 – 20
4NK–21721–00–P9	23 – 6
4NK–21731–00	23 – 48
1JK–21735–00	23 – 11
4NK–21735–00	22 – 5
4NK–21741–00	23 – 51
3Y6–21747–00	23 – 22
1D6–2176P–21	43 – 4
4NK–2177G–00	23 – 21
1D6–2179W–30	43 – 4
26H–21828–00	23 – 33
4NK–21871–00	23 – 29
4NK–21875–00	23 – 32
4NK–22141–00	24 – 6
26H–22143–00	24 – 7
4NK–2214H–00	24 – 5
4XY–2217A–00	24 – 13
4XY–2217M–00	24 – 18
26H–22189–00	24 – 9
2H7–2219X–00	24 – 8
1D6–22210–00	26 – 1
1D6–22358–00	24 – 24
1D6–23102–10	28 – 1
1D6–23103–10	28 – 21
4XY–23110–00	28 – 2
	28 – 22
4XY–23111–00	28 – 5
	28 – 25
1D6–23121–10	28 – 46
4NK–23122–01	27 – 24
4NK–23123–10	28 – 45
4NK–23125–00	28 – 11
	28 – 31
5MB–23126–00	28 – 3
3MA–23129–10	28 – 17

PART NO.	REF. NO.
3MA–23129–10	28 – 37
4NK–23135–00	28 – 15
	28 – 35
5MB–23136–00	28 – 23
1D6–23141–00	28 – 4
	28 – 24
4NK–23144–00	28 – 7
	28 – 27
4NK–23145–00	28 – 9
	28 – 29
4NK–23146–00	28 – 10
	28 – 30
4NK–23147–00	28 – 6
	28 – 26
4NK–23151–00	28 – 13
	28 – 33
34L–23153–00	28 – 8
	28 – 28
4NK–23157–00	28 – 12
	28 – 32
4NK–23163–00	28 – 47
4NK–23165–00	28 – 48
4WM–23166–00	28 – 16
	28 – 36
4WM–23171–00	28 – 14
	28 – 34
1D6–23174–00	27 – 22
4U5–2317J–00	23 – 41
	23 – 54
1D6–2317U–00	46 – 35
1D6–2317V–00	46 – 34
4XY–2317W–00	22 – 14
1KT–23181–00	28 – 41
38W–23181–00	28 – 43
4NK–23181–00	28 – 18
	28 – 38
4XY–23181–00	28 – 44
4V1–23184–L0	28 – 20
	28 – 40
4NK–23193–00	28 – 19
	28 – 39
1D6–2331E–00	27 – 19
1D6–23340–00	28 – 42
1D6–23389–00	27 – 20
1W1–23416–00	27 – 3
26H–23418–01	27 – 6
4XV–2341B–00	27 – 18
1D6–23441–00	27 – 11

PART NO.	REF. NO.
1D6–23442–00	27 – 13
3DM–23445–00	27 – 16
2H9–23469–00	29 – 8
4XY–23818–00	27 – 25
1D6–24129–00	29 – 9
1D6–24139–00	29 – 10
3HA–24141–00	21 – 2
1D6–2414G–00	29 – 17
5EJ–2414H–00	23 – 23
1D6–24157–00	29 – 31
1D6–2416B–40	29 – 3
4XY–24170–00	29 – 51
1D6–2417B–40	29 – 4
5PX–24180–00	29 – 37
4XY–24182–00	29 – 11
4XY–24183–00	29 – 12
42X–24186–00	29 – 13
1D6–24188–00	29 – 16
2JU–2419E–00	29 – 52
1D6–24240–70	29 – 2
4XY–24311–10	29 – 25
4NK–24312–10	29 – 29
1D6–24321–10	29 – 35
4WM–24339–00	47 – 13
3H3–24376–00	11 – 69
4XY–24453–10	11 – 58
3CV–24491–10	23 – 43
4WM–24500–02	29 – 18
4X8–24512–00	29 – 22
3AC–24523–00	29 – 19
3AJ–24534–01	29 – 20
1FK–24560–10	29 – 27
1FK–24566–00	29 – 28
4NK–24602–11	29 – 30
1D6–24710–00	30 – 1
4NK–2471A–00	30 – 8
3L7–24724–00	30 – 3
509–24724–00	30 – 12
22W–24741–00	30 – 2
	30 – 7
1D6–24750–00	30 – 6
4NK–2475H–00	30 – 10
5GA–24786–11	30 – 29
4NK–24796–00	30 – 14
4XY–24847–00	30 – 16
4NK–2514A–00	32 – 2
4NK–2515A–00	32 – 3
4NK–25168–00–33	31 – 1

PART NO.	REF. NO.
4NK–25181–00	31 – 8
2H7–25315–00	33 – 2
1J7–25319–02	33 – 12
4NK–25338–01–33	33 – 1
1FK–25364–00	33 – 11
26H–25366–01	33 – 9
4YE–25381–00	33 – 20
5MT–25398–00	31 – 7
	33 – 18
5MT–25398–10	31 – 7
	33 – 18
5MT–25398–20	31 – 7
	33 – 18
4WM–2580T–01	32 – 6
4WM–2580U–01	32 – 16
4NK–2580W–00	34 – 6
4XY–25819–00	34 – 3
4XY–2581J–01	39 – 35
5BN–25827–00	32 – 15
	32 – 25
3LD–2582A–00	39 – 21
5BN–2582U–00	32 – 1
4NK–2582W–00	34 – 1
1NL–25836–00	34 – 13
4NK–2583V–00	39 – 17
2KF–25852–50	39 – 32
4NK–25854–00	36 – 4
	37 – 5
360–25854–01	39 – 30
2GU–25855–00	39 – 31
4L0–25862–01	36 – 14
	37 – 20
2VN–25866–00	39 – 19
4NK–25867–00	36 – 8
	37 – 11
1D6–25872–00	36 – 11
1D6–25873–00	36 – 17
4XY–25875–00	36 – 20
3XV–25876–00	39 – 42
4XY–25876–00	39 – 43
3LC–25885–00	39 – 36
4NK–25885–00	36 – 15
4XY–25886–00	36 – 23
4NK–25887–00	39 – 40
4NK–25888–00	39 – 33
31A–25894–01	39 – 29
4XY–25895–00	39 – 23
4NK–2589F–00	36 – 6

PART NO.	REF. NO.
4NK–2589H–00	36 – 5
	37 – 7
5JW–25914–10	32 – 9
	32 – 19
1NL–25919–00	34 – 16
4BP–25919–00	32 – 12
	32 – 22
3HE–25924–00	34 – 14
3GM–25925–00	34 – 15
3YX–25929–00	32 – 13
	32 – 23
4TT–25937–00	32 – 10
	32 – 20
1D6–26110–01	35 – 1
4XY–26240–00	35 – 6
4NK–26241–00	35 – 2
1D6–26246–00	35 – 3
41V–26273–00	35 – 20
41V–2627A–00	35 – 21
41V–2627E–00	35 – 17
4NK–26280–10	35 – 27
4NK–26290–10	35 – 28
41V–2629A–00	35 – 15
41V–2629G–01	35 – 22
41V–2629L–00	35 – 25
1D6–26311–00	35 – 7
1D6–26312–00	35 – 8
4XY–26313–00	35 – 13
4XY–2631J–00	35 – 14
4XY–2637E–00	35 – 26
3GM–26455–00	37 – 4
3GM–26464–00	37 – 3
4XY–26471–00	37 – 16
1D6–26472–00	37 – 14
116–27114–00	12 – 17
4NK–27211–00	39 – 1
4NK–27222–00	39 – 12
4NK–27242–00	39 – 2
4NK–27262–00	39 – 7
4NK–27285–00	39 – 6
4XY–27311–00	38 – 39
4NK–27316–00	39 – 11
4XY–27410–10	38 – 1
4XY–27413–01	38 – 3
4NK–2741L–01	39 – 9
4XY–27420–10	38 – 11
4XY–27423–01	38 – 13
4NK–27426–00	38 – 5

PART NO.	REF. NO.
4NK–27426–00	38 – 15
3D8–27427–00	38 – 4
	38 – 14
4YE–27427–01	38 – 24
	38 – 32
4XY–27430–00	38 – 21
4YE–27433–00	38 – 22
	38 – 30
4YE–27437–01	38 – 23
	38 – 31
4XY–27440–00	38 – 29
4NK–27443–00	38 – 37
4NK–27451–10	38 – 2
4NK–27461–10	38 – 12
3MA–27491–00	22 – 6
4NK–27496–00	38 – 7
4NK–27497–00	38 – 17
4XY–28100–01	43 – 75
55K–2811G–00	43 – 76
4B5–2815K–00	40 – 35
4XY–2831T–01	41 – 38
4XY–28321–00	53 – 9
4XY–2832T–01	41 – 41
1D6–28331–00	40 – 19
1D6–28333–09	40 – 22
1D6–28336–00	40 – 2
1D6–28337–00	40 – 6
1D6–28345–00	40 – 8
1D6–28346–00	40 – 12
1D6–28347–00	40 – 16
4XY–28347–00	41 – 44
1D6–2834E–00	40 – 15
4XY–2834E–00	53 – 3
1D6–2834V–00	40 – 27
1D6–2834W–00	40 – 40
1D6–28356–01	40 – 31
2C9–2835J–00–P0	41 – 1
2C9–2835K–00–P0	41 – 18
4XY–2835N–00	41 – 8
4XY–2835R–00	41 – 25
1D6–2835U–01	40 – 3
4XY–28365–00	53 – 15
1D6–2836A–10	40 – 4
1D6–2836C–00	40 – 9
1D6–2836E–10	40 – 5
1D6–2836T–00	40 – 37
1D6–2836U–00	40 – 38
4KJ–28371–00	42 – 43

PART NO.	REF. NO.
4KJ–28371–00	43 – 47
1D6–28372–00	40 – 33
1D6–28374–09	40 – 23
1D6–2837C–00	40 – 10
1D6–2837G–00	40 – 17
1D6–2837H–00	40 – 25
1D6–2837J–00	40 – 7
1D6–2837K–00	40 – 11
1D6–2837U–00	40 – 1
1D6–28388–00	40 – 18
1D6–2838C–00	40 – 26
1D6–28396–00	40 – 13
1D6–28397–00	40 – 14
1D6–283C1–00	40 – 28
1D6–283C2–00	40 – 29
4XY–2840B–00	53 – 7
1D6–2840F–10	30 – 26
1D6–2840G–70	42 – 2
1D6–2840J–70	43 – 2
1D6–28413–00	42 – 54
4YE–28414–02	43 – 58
1D6–28415–00	42 – 53
1D6–28416–00	43 – 57
4XY–28418–01	41 – 15
4XY–28419–00	41 – 35
4XY–2841A–00	42 – 9
	43 – 10
4XY–2841K–00	42 – 66
4XY–28427–00	42 – 26
4XY–28428–00	42 – 6
	43 – 7
4XY–28429–00	42 – 34
	43 – 38
4XY–2842A–00	42 – 41
4XY–2842K–00	43 – 70
4XY–2842M–00	41 – 11
4XY–2842N–00	41 – 28
4XY–28437–00	43 – 27
1D6–2843A–00	42 – 62
	43 – 66
4XY–2843C–00	43 – 45
4XY–2843J–00	42 – 17
	43 – 18
4XY–2843L–00	43 – 34
1D6–2843N–00	42 – 63
	43 – 67
4XY–28444–10	42 – 23
1D6–28446–00	42 – 4

PART NO.	REF. NO.
1D6–28446–00	43 – 6
4XY–28454–10	43 – 24
4XY–2845B–00	42 – 28
4XY–2845J–00	42 – 38
	43 – 42
4XY–2845M–00	43 – 29
1D6–28473–00	42 – 51
1D6–28474–00	43 – 55
1D6–2847A–00	42 – 3
1D6–2847B–00	43 – 3
4XY–2847H–00	42 – 27
	43 – 28
4XY–2848K–01	42 – 50
	43 – 54
4XY–28494–00	42 – 7
	43 – 8
4XY–28495–00	42 – 8
	43 – 9
4XY–28498–00	42 – 13
	43 – 14
4XY–28499–00	42 – 32
	43 – 33
4XY–2849H–00	42 – 40
	43 – 44
4XY–2849K–00	42 – 35
	43 – 39
4XY–46101–00	25 – 1
2H7–46102–00	25 – 13
1J7–46117–Y0–25	25 – 28
1J7–46117–Y0–30	25 – 28
1J7–46117–Y0–40	25 – 28
1J7–46117–Y0–50	25 – 28
22U–46118–00–12	25 – 18
22U–46118–00–14	25 – 18
22U–46118–00–16	25 – 18
22U–46118–00–18	25 – 18
22U–46118–00–20	25 – 18
4H7–46123–01	25 – 10
4H7–46125–00	25 – 6
1FK–46152–01	25 – 19
4YE–46153–00	25 – 5
1FK–46154–00	25 – 29
1FK–46156–00	25 – 30
1FK–46157–00–15	25 – 31
1FK–46157–00–20	25 – 31
4XY–46172–00	25 – 32
4X7–46180–00	25 – 37
4XY–81410–01	44 – 1

PART NO.	REF. NO.
4XY–81450–00	44 – 2
1D6–81517–00	11 – 34
1D6–81670–00	44 – 3
3AJ–81801–00	45 – 5
4NK–81815–00	45 – 6
3AJ–81826–00	45 – 4
4XV–8182A–00	45 – 7
11H–81844–00	45 – 3
1FK–81847–00	45 – 2
4NK–81890–00	45 – 1
4BH–81940–02	51 – 36
5KS–81950–00	51 – 41
1UY–81950–92	51 – 42
	53 – 16
29U–81950–93	53 – 17
1VJ–81953–00	53 – 18
4XY–81953–00	51 – 21
4XY–81960–00	51 – 39
4SH–82100–22	51 – 1
4NK–82115–00	51 – 3
1D6–82116–00	51 – 4
120–82131–00	51 – 2
1AE–82151–00	51 – 37
1NL–82151–00	51 – 19
36Y–82151–00	51 – 18
42X–82151–00	51 – 17
1D6–82176–00	51 – 10
4XY–82305–00	52 – 21
1D6–82309–00	52 – 16
1D6–82310–00	52 – 9
1D6–82310–10	52 – 10
4NK–82316–00	52 – 15
4XY–82320–00	52 – 12
4XY–82320–10	52 – 11
4XY–82361–00	9 – 56
4XY–82362–00	9 – 57
4XY–82370–00	52 – 20
4XY–82388–01	9 – 58
1D6–82501–01	51 – 6
1D6–82509–00	52 – 19
5PX–82511–09	51 – 7
4XY–82530–00	51 – 14
4XY–82539–00	51 – 15
1D6–82540–00	52 – 1
4XY–82545–00	51 – 13
3YX–82560–00	52 – 8
5EB–82560–00	52 – 7
5FU–82560–60	51 – 43

PART NO.	REF. NO.
5RT–82566–50	51 – 44
4BH–82576–01	51 – 52
1D6–82590–00	51 – 16
1UA–82591–00	51 – 27
	51 – 34
	51 – 47
4XY–82917–00	51 – 50
1D6–8291G–00	51 – 9
1D6–83310–00	46 – 1
5VN–83311–00	46 – 2
	46 – 8
5VN–83311–10	46 – 14
	46 – 20
1D6–83312–10	46 – 21
5VN–83312–10	46 – 3
1D6–83312–20	46 – 15
5VN–83312–20	46 – 9
1D6–83313–00	46 – 4
	46 – 10
	46 – 16
	46 – 22
4YE–83314–00	46 – 29
4YE–83318–00	46 – 27
1D6–83320–00	46 – 7
5VN–83321–00	46 – 37
4YE–83324–00	46 – 30
4YE–83328–00	46 – 28
1D6–83330–00	46 – 13
1D6–83340–00	46 – 19
4NK–83345–00	46 – 38
4YE–8334F–00	46 – 31
4NK–83350–00	52 – 23
57M–83358–00	46 – 6
	46 – 12
	46 – 18
	46 – 24
1D6–83363–00	46 – 5
	46 – 23
1D6–83363–10	46 – 11
	46 – 17
4NK–83371–00	52 – 24
4XY–83371–00	52 – 25
1D6–83500–00	47 – 1
5J0–83513–00	47 – 4
1D6–83519–00	47 – 7
1D6–8354H–00	47 – 16
1D6–83553–00	47 – 2
1D6–83559–00	47 – 10

PART NO.	REF. NO.
1D6–8355X–00	47 – 5
1D6–83592–00	47 – 9
4NK–83755–01	52 – 28
5FU–83790–00	11 – 32
5FU–83790–20	11 – 33
1D6–83912–00	37 – 8
1D6–83922–00	50 – 1
4NK–83945–00	37 – 9
1D6–83969–10	50 – 7
1D6–83973–10	50 – 5
1D6–83980–00	51 – 48
290–84124–21	48 – 13
5VN–8412H–00	48 – 23
5BN–84154–00	49 – 8
1D6–84310–00	48 – 1
2F9–84314–00	48 – 4
1D6–84315–00	48 – 12
4NK–84320–00	48 – 3
4WM–84330–00	48 – 14
341–84331–60	48 – 9
5G2–84332–60	48 – 11
198–84334–60	48 – 10
42X–84366–00	48 – 15
4WM–84366–00	48 – 16
1D6–84394–00	48 – 2
2F9–84395–00	48 – 6
3SX–84397–00	48 – 5
4NK–84527–01	49 – 9
2AL–84553–00	21 – 3
5BN–84700–01	49 – 1
4NK–84702–00	49 – 5
1D6–84703–00	22 – 16
256–84714–60	49 – 2
1D6–84717–00	49 – 12
4NK–84721–00	49 – 3
5BN–84735–00	49 – 4
5BN–84751–00	22 – 15
4NK–85075–00	52 – 29
11H–85110–01	36 – 26
1FK–85130–00	22 – 21
4YE–85131–00	42 – 68
	43 – 72
4YE–85132–00	42 – 69
	43 – 73
4XY–85720–00	52 – 4
1D6–85752–00	29 – 47
5G3–85753–00	29 – 48
4XY–85825–00	53 – 6

PART NO.	REF. NO.
4XY–85830–01	53 – 1
4XY–85860–00	53 – 4
4XY–85861–00	53 – 8
4HM–85885–20	11 – 39
4XV–8A8E0–00	52 – 5
4K0–W0041–50	36 – 2
1FK–W0042–50	39 – 18
4WM–W0045–00	32 – 11
	32 – 21
4NK–W0046–00	34 – 11
1KT–W0047–00	34 – 8
3JB–W0047–00	32 – 8
	32 – 18
4NK–W0047–00	34 – 10
1J3–W0048–00	34 – 12
1NL–W0048–00	16 – 28
51L–W0048–00	32 – 14
	32 – 24
1KT–W0057–00	34 – 7
3JB–W0057–00	32 – 7
	32 – 17
4NK–W0057–00	34 – 9
26H–W0098–00	16 – 29
3GM–W0099–00	37 – 2
4NK–W1241–02	5 – 9
26H–W1751–01	18 – 4
1D6–W2211–00	24 – 1
1D6–W2341–10	27 – 9
5VN–W2585–20	36 – 3
	37 – 6
4XY–W2587–10	36 – 1
4NK–W2645–10	37 – 1
4XY–W2843–00	42 – 37
	43 – 41
26H–Y1319–10	8 – 4
4NK–Y2150–S0–6Y	22 – 1
1D6–Y2410–10–X1	29 – 1
4XY–Y2843–3J–5Y	42 – 1
4XY–Y2844–3U–4Y	43 – 1
4XY–Y2844–3V–4Y	43 – 1
90101–12498	26 – 3
	26 – 5
90101–12673	24 – 21
90105–06010	27 – 23
90105–06153	1 – 5
	1 – 17
90105–07004	4 – 5
90105–08310	21 – 26

PART NO.	REF. NO.
90105–10248	13 – 25
90105–10249	13 – 26
90105–10638	32 – 26
	34 – 17
90105–10788	21 – 12
	21 – 13
90105–12005	2 – 12
90105–12252	21 – 14
90105–12460	38 – 41
90109–063F8	20 – 6
90109–066F0	1 – 32
90109–08002	29 – 15
90109–08006	32 – 4
90109–08050	20 – 3
90109–080G5	51 – 8
90109–081F0	52 – 30
90109–083G4	34 – 2
90109–103G0	13 – 24
90109–104E4	24 – 16
90110–06023	6 – 33
90110–06035	16 – 30
90110–06113	9 – 6
90110–06123	35 – 4
90110–06200	22 – 12
90110–06202	41 – 4
	41 – 21
90110–06243	16 – 31
90110–08193	15 – 8
90110–10161	21 – 6
	38 – 10
	38 – 20
90111–06003	30 – 28
90111–06054	30 – 19
	30 – 21
90111–08009	40 – 36
	40 – 39
90111–08014	42 – 65
	43 – 69
90111–08021	42 – 57
	43 – 61
90111–10016	40 – 32
90116–08427	25 – 3
90116–10411	13 – 7
90116–10429	13 – 8
90116–10593	25 – 2
90119–05071	29 – 49
90119–06044	6 – 7
	23 – 30

PART NO.	REF. NO.
90119–06096	23 – 28
90119–06217	52 – 26
90119–06236	21 – 18
90149–05299	41 – 9
	41 – 26
	51 – 11
90149–05321	19 – 12
	52 – 3
90149–06011	29 – 24
90149–06131	50 – 2
90149–06229	20 – 29
90149–06280	20 – 19
90149–06298	23 – 3
	23 – 8
	23 – 15
	47 – 17
90149–08152	13 – 30
90151–06013	19 – 8
90151–06018	42 – 72
90151–06041	13 – 32
	20 – 2
90152–05005	48 – 17
90154–05013	21 – 21
	41 – 13
	41 – 30
90154–05052	47 – 14
90154–05064	47 – 11
90157–05079	51 – 45
90157–05095	38 – 8
	38 – 18
90159–05155	8 – 37
90159–06016	27 – 26
90159–06033	23 – 14
	23 – 49
	23 – 52
90164–05014	47 – 3
90170–06010	50 – 3
90170–06228	20 – 25
90170–10206	21 – 11
90170–14350	26 – 2
90170–20323	16 – 18
90176–05051	40 – 24
90176–05054	29 – 41
90176–06041	40 – 21
90176–06065	52 – 22
90176–10075	21 – 10
	25 – 41
90176–12052	27 – 14

PART NO.	REF. NO.
90176–22081	27 – 7
90179–05523	29 – 33
	41 – 7
	41 – 24
90179–06017	46 – 26
90179–08327	2 – 9
90179–08442	12 – 24
90179–10026	1 – 28
90179–16661	25 – 12
90179–16662	18 – 16
90179–25033	27 – 4
90179–44328	18 – 8
90183–04005	42 – 42
	43 – 46
90183–05024	41 – 12
	41 – 29
	42 – 10
	42 – 14
	43 – 11
	43 – 15
90183–06053	22 – 11
90183–06069	9 – 50
90185–12119	24 – 22
90185–12134	38 – 42
90185–18167	33 – 22
90201–05032	47 – 12
90201–054K4	42 – 22
	43 – 23
90201–05725	10 – 59
90201–06043	22 – 20
90201–06070	20 – 18
90201–060A3	48 – 20
90201–064H0	53 – 14
90201–06589	20 – 31
90201–065G8	42 – 44
	43 – 48
90201–06674	44 – 7
90201–08014	32 – 5
90201–08016	11 – 31
90201–08083	39 – 15
90201–08326	21 – 33
	42 – 33
	43 – 37
90201–08676	18 – 22
90201–10118	16 – 33
90201–10128	8 – 23
90201–102G9	1 – 29
90201–10437	34 – 5

PART NO.	REF. NO.
90201–10669	21 – 29
90201–11597	13 – 27
90201–12015	27 – 15
90201–12181	40 – 30
90201–121H0	2 – 13
90201–12688	20 – 21
90201–126A7	24 – 23
	26 – 7
90201–12790	13 – 38
90201–127E1	20 – 14
90201–14220	27 – 17
90201–166R5	25 – 11
90201–166R6	18 – 15
90201–181U5	33 – 21
90201–220T0	27 – 8
90201–231A2	25 – 34
90201–232K5	17 – 10
90201–252K4	18 – 5
90201–25634	18 – 11
90201–350F3	15 – 9
90202–05057	10 – 26
90202–05180	51 – 12
90202–05193	29 – 23
90202–06170	22 – 13
90202–06172	23 – 4
	23 – 9
	23 – 16
90202–08125	42 – 24
	43 – 25
90202–26142	27 – 5
90206–12M00	40 – 20
90209–21281	18 – 6
90209–25196	17 – 3
90209–27192	17 – 18
90209–32231	17 – 15
90215–08115	20 – 4
90215–25218	16 – 17
90240–08013	39 – 14
90249–12167	33 – 10
90254–03008	1 – 12
	1 – 24
90267–32109	43 – 35
90269–05039	42 – 31
	43 – 32
90269–06062	41 – 10
	41 – 27
90269–06081	42 – 36
	43 – 40

PART NO.	REF. NO.
90269–06083	21 – 22
	30 – 17
90269–07076	41 – 34
90280–05029	2 – 11
90338–06162	35 – 5
	36 – 10
	37 – 13
90338–07124	21 – 4
90338–07259	42 – 52
	43 – 56
90338–10150	1 – 34
90338–11152	13 – 9
90338–20113	24 – 12
90338–23172	30 – 15
90340–14132	5 – 12
	8 – 14
	25 – 24
90340–14135	25 – 26
90340–14139	14 – 8
90340–18101	1 – 6
	1 – 18
90387–050T5	47 – 15
90387–06049	48 – 21
90387–06091	29 – 6
90387–0614X	6 – 9
90387–062L2	23 – 45
90387–063E6	49 – 10
90387–064M9	46 – 32
	53 – 12
90387–06681	27 – 27
90387–066Y6	41 – 6
	41 – 23
90387–067N5	23 – 19
	23 – 27
90387–08025	40 – 34
90387–08029	42 – 64
	43 – 68
90387–0811N	42 – 47
	42 – 55
	43 – 51
	43 – 59
90387–0813V	29 – 14
90387–084R5	42 – 46
	43 – 50
90387–1215U	38 – 40
90387–122J6	24 – 15
90387–126T1	24 – 20
90387–126W4	26 – 6

PART NO.	REF. NO.
90387–2007J	33 – 5
90387–2008H	33 – 3
90387–200J2	33 – 19
90387–204H5	24 – 4
90387–2200T	31 – 9
90387–2208J	31 – 2
90401–08038	8 – 20
90401–08093	8 – 29
90401–10020	36 – 12
	36 – 18
	36 – 28
	37 – 18
	39 – 38
90401–10108	8 – 22
90401–10159	16 – 34
90401–20145	8 – 2
90430–06014	14 – 21
90430–06166	13 – 19
90430–08119	8 – 21
	8 – 30
90430–10005	36 – 13
	36 – 19
	36 – 29
	37 – 19
	39 – 37
	39 – 39
90445–05278	5 – 14
90445–086K4	10 – 19
90445–09117	23 – 35
90445–09123	6 – 13
90445–091J2	10 – 53
90445–11053	29 – 42
90445–11054	29 – 54
90445–115J9	9 – 24
90450–28014	6 – 2
	6 – 18
	6 – 36
90450–38040	6 – 23
	6 – 41
90460–58204	9 – 13
	9 – 19
90460–65169	9 – 52
	9 – 55
90461–05003	9 – 37
	9 – 47
90461–10132	36 – 21
	36 – 24
90461–14150	13 – 41

PART NO.	REF. NO.
90461–15100	8 – 36
	29 – 38
90462–10226	8 – 34
90462–20188	10 – 11
	10 – 47
90464–06005	29 – 34
90464–07209	41 – 43
90464–09130	52 – 18
90464–09M31	11 – 47
90464–10112	51 – 30
90464–10190	37 – 17
	51 – 46
90464–12008	26 – 10
90464–12036	51 – 26
	51 – 31
	51 – 33
90464–12089	51 – 29
90464–13005	26 – 9
90464–13073	39 – 25
	50 – 10
90464–13077	51 – 35
90464–13103	29 – 46
90464–14002	48 – 22
90464–15192	11 – 72
90464–15195	51 – 24
90464–16061	35 – 12
	37 – 15
	51 – 32
	51 – 53
90464–18246	51 – 5
90464–18269	41 – 33
90464–20191	39 – 24
	50 – 9
	51 – 25
90464–25002	22 – 18
90464–25217	10 – 18
	51 – 23
90464–25267	6 – 15
	10 – 21
90464–35132	51 – 28
90465–08193	8 – 31
90465–08233	13 – 33
90465–10098	41 – 40
90465–13275	52 – 31
90467–08003	6 – 14
90467–08092	10 – 20
	10 – 54
90467–09002	29 – 36

PART NO.	REF. NO.
90467–09006	23 – 36
90467–10039	9 – 4
90467–10041	11 – 66
	29 – 43
	29 – 44
90467–11019	23 – 34
90467–11090	6 – 43
90467–11106	9 – 25
90467–12053	29 – 26
90467–13123	9 – 9
90467–14015	6 – 32
90467–14057	39 – 26
90467–19160	10 – 9
	10 – 41
	10 – 45
90467–20030	10 – 28
	10 – 61
90467–23109	6 – 17
	6 – 25
90467–24096	10 – 17
	10 – 52
90468–07179	35 – 9
90468–08104	10 – 5
	10 – 37
90468–15139	35 – 10
90480–01141	21 – 38
90480–01558	41 – 32
90480–10289	41 – 5
	41 – 22
90480–10517	5 – 24
90480–11224	41 – 17
	41 – 37
90480–13163	23 – 46
90480–13398	23 – 20
	23 – 26
90480–13567	23 – 5
	23 – 10
	23 – 31
	23 – 50
	23 – 53
90480–15061	22 – 9
90480–15235	53 – 11
90480–16284	6 – 12
90480–18354	29 – 5
90480–19283	6 – 10
90480–20384	23 – 25
90480–20447	42 – 45
	43 – 49

PART NO.	REF. NO.
90501–06022	19 – 9
90501–10510	50 – 4
90501–13720	38 – 26
	38 – 34
90501–16491	25 – 39
90501–75638	18 – 2
90506–08227	20 – 11
90506–35474	38 – 43
90507–14064	20 – 8
90508–18023	39 – 3
90508–32588	20 – 12
90560–30234	19 – 3
91314–06014	5 – 22
91314–06016	6 – 29
91314–06020	1 – 46
91314–06025	5 – 17
	14 – 16
	14 – 27
	36 – 9
	37 – 12
91314–06030	5 – 11
	27 – 10
91314–06035	9 – 28
	14 – 20
	14 – 28
91314–06040	6 – 34
91314–06045	14 – 5
	14 – 19
91314–06060	14 – 4
91314–06080	5 – 19
91314–08025	22 – 3
	27 – 12
91314–08055	46 – 36
91314–10035	21 – 36
91317–05012	11 – 10
91317–05016	52 – 13
91317–06012	6 – 21
	6 – 39
	6 – 52
	10 – 33
	27 – 21
91317–06016	10 – 65
91317–06020	4 – 15
	5 – 29
	9 – 5
	36 – 16
91317–06025	7 – 5
91317–06030	8 – 16

PART NO.	REF. NO.
91317–06035	29 – 7
91317–08014	38 – 38
91317–08016	39 – 10
91317–08035	21 – 31
91401–16012	39 – 16
91402–20012	39 – 5
91702–06022	39 – 4
91808–16023	1 – 4
	1 – 16
92014–06010	1 – 57
92014–06014	1 – 51
	14 – 17
92014–06016	39 – 34
92014–06030	1 – 52
92014–08016	42 – 58
	43 – 62
92014–08020	30 – 4
	39 – 22
	42 – 59
	43 – 63
92017–05008	42 – 18
	43 – 19
92017–05014	42 – 21
	42 – 29
	43 – 22
	43 – 30
92017–05020	42 – 25
	43 – 26
92017–06014	47 – 8
92017–06020	53 – 13
92017–06035	42 – 49
	43 – 53
92017–06055	42 – 48
	43 – 52
92017–08025	12 – 4
	12 – 9
92017–08040	38 – 28
	38 – 36
92017–10030	41 – 16
	41 – 36
92902–04100	48 – 8
92903–08200	30 – 5
92903–10100	25 – 42
92903–20600	33 – 23
92904–08600	24 – 11
92907–03600	43 – 36
92907–04100	11 – 9
92907–05100	11 – 19

PART NO.	REF. NO.
92907–05200	10 – 25
	38 – 9
	38 – 19
92907–05600	6 – 47
	29 – 40
	35 – 19
	35 – 24
	42 – 12
	42 – 16
	42 – 19
	42 – 30
	43 – 13
	43 – 17
	43 – 20
	43 – 31
92907–06100	10 – 49
92907–06600	6 – 54
	10 – 13
	10 – 34
	10 – 50
	44 – 5
	44 – 14
92907–08700	25 – 27
92990–06600	12 – 6
	12 – 11
	12 – 15
	12 – 21
92990–10600	21 – 37
93101–10090	5 – 7
93101–30084	25 – 15
93101–35085	18 – 18
93101–38098	25 – 9
93102–14209	20 – 9
93102–25064	33 – 8
93102–40367	33 – 15
93102–70167	25 – 22
93106–28023	24 – 3
93106–28043	31 – 4
93108–43013	25 – 33
93109–08061	16 – 23
93210–06632	16 – 20
93210–06667	8 – 7
	8 – 26
	13 – 40
93210–13361	8 – 5
93210–14369	14 – 9
93210–14579	8 – 12
93210–14637	8 – 6

PART NO.	REF. NO.
93210–15620	39 – 20
93210–16629	1 – 9
	1 – 21
93210–18322	1 – 10
	1 – 22
	16 – 25
93210–18417	6 – 20
	6 – 38
	6 – 51
93210–21631	1 – 11
	1 – 23
93210–22382	13 – 12
93210–23787	5 – 21
93210–27370	13 – 36
	14 – 24
93210–29196	52 – 2
93210–45150	14 – 11
93210–49046	5 – 28
93210–60426	25 – 7
93210–68347	33 – 14
93210–71360	18 – 19
93211–16591	5 – 10
93211–54698	25 – 20
93306–00006	5 – 6
93306–00304	16 – 16
93306–00420	31 – 3
93306–20555	17 – 23
93306–20645	17 – 22
93306–20901	18 – 7
93306–30430	17 – 7
93306–30437	33 – 6
93306–30533	25 – 8
93306–36401	17 – 8
93306–90602	19 – 2
93311–21044	25 – 38
93311–43729	25 – 17
93316–01403	25 – 16
93317–32677	33 – 4
93317–41761	24 – 19
93317–42060	24 – 14
93332–00001	27 – 1
93332–00008	27 – 2
93332–00024	18 – 13
93332–00028	18 – 10
93332–00050	24 – 2
93332–00051	24 – 2
93410–22039	25 – 36
93410–23056	17 – 9

PART NO.	REF. NO.
93410–23056	25 – 35
93440–12117	1 – 3
	1 – 15
93440–20088	25 – 40
93440–28062	17 – 4
93440–30077	17 – 19
93440–34025	17 – 16
93440–45022	33 – 13
93440–52118	17 – 11
	17 – 24
93450–19095	2 – 6
93501–04011	38 – 27
	38 – 35
93511–32017	16 – 22
93603–07073	16 – 26
93603–10049	19 – 4
93603–14026	5 – 3
93604–12037	19 – 7
93604–16092	19 – 13
93900–00025	33 – 17
93900–00030	31 – 6
94115–15009	33 – 16
94115–16024	31 – 5
94590–44118	4 – 6
94600–02001	4 – 7
94701–00241	1 – 25
94701–00242	1 – 25
95024–06010	47 – 6
95024–06012	22 – 19
	39 – 41
95024–06030	46 – 25
95024–08012	30 – 13
95024–08020	12 – 14
	12 – 20
95024–10030	34 – 4
95027–06008	51 – 38
95027–06010	22 – 17
	29 – 32
95027–06012	6 – 53
	30 – 11
	39 – 28
95027–06016	39 – 44
	48 – 18
	52 – 6
95027–06025	39 – 8
	48 – 19
95304–06700	20 – 24
95307–05600	10 – 24

PART NO.	REF. NO.
95307–06600	11 – 64
	49 – 11
95307–08700	39 – 13
95307–08800	42 – 61
	43 – 65
95317–08600	25 – 21
95604–06100	36 – 7
	37 – 10
95607–05100	35 – 16
95607–05200	42 – 39
	43 – 43
95607–08200	21 – 32
95607–10200	24 – 17
95607–12200	26 – 4
	26 – 8
95617–08620	1 – 7
	1 – 19
95707–05500	22 – 22
	36 – 27
95707–06500	10 – 15
	23 – 17
	30 – 9
95804–06012	9 – 38
95807–06010	23 – 42
	29 – 53
	41 – 39
	41 – 42
	52 – 17
	52 – 27
95807–06012	10 – 39
	36 – 22
	36 – 25
95807–06020	51 – 40
95807–08014	42 – 56
	43 – 60
95807–10040	21 – 30
95807–12016	13 – 37
95814–06045	13 – 13
95814–06070	13 – 14
95814–06090	13 – 15
95814–08016	42 – 67
	43 – 71
95814–08025	12 – 28
	12 – 31
95814–08045	13 – 17
95814–08080	13 – 18
	13 – 22
95817–06012	8 – 10

PART NO.	REF. NO.
95817–06012	8 – 18
	8 – 33
	10 – 43
95817–06016	23 – 44
95817–06095	13 – 16
95817–08025	4 – 12
95817–08050	13 – 20
95817–08065	13 – 21
95817–08095	13 – 23
95817–10050	25 – 4
95827–06012	6 – 44
	10 – 7
	10 – 29
95827–06025	45 – 8
95827–06045	6 – 11
95827–06055	45 – 9
95827–08016	42 – 60
	43 – 64
95827–08030	18 – 21
95827–10035	21 – 16
95827–10070	21 – 8
95827–10080	21 – 9
97007–05012	42 – 11
	43 – 12
97007–05016	42 – 15
	43 – 16
	52 – 14
97007–06020	23 – 18
	46 – 33
97007–06025	16 – 15
97024–06020	20 – 22
97024–08025	24 – 10
97027–05010	6 – 46
97027–06020	20 – 30
97080–06008	12 – 5
	12 – 10
	12 – 16
	12 – 22
97707–30514	42 – 70
	43 – 74
97707–40516	49 – 6
97707–50014	53 – 10
	53 – 19
97707–50016	51 – 22
	53 – 5
97707–50020	42 – 20
	43 – 21
97707–50112	10 – 57

PART NO.	REF. NO.
97707–50114	10 – 58
97707–50116	9 – 23
	9 – 36
	9 – 46
97707–50120	9 – 15
	9 – 21
97707–50125	9 – 34
	9 – 44
	9 – 60
97707–50140	9 – 35
	9 – 45
	9 – 59
97707–60016	53 – 2
97780–40525	49 – 7
97801–03008	29 – 21
98502–04008	48 – 7
98504–05025	50 – 6
	50 – 8
98507–04014	11 – 8
98507–05006	11 – 37
98507–05008	35 – 11
98507–05012	29 – 39
98507–05014	35 – 18
98507–05018	11 – 18
98507–05020	11 – 52
98507–05025	35 – 23
98507–06012	44 – 13
98507–06014	10 – 12
98507–06016	10 – 48
	14 – 7
	44 – 6
98507–06035	44 – 4
98607–05110	11 – 30
	11 – 42
98704–06016	14 – 12
98907–04014	51 – 49
98907–04025	51 – 51
98907–05010	23 – 47
	41 – 14
	41 – 31
98907–06012	51 – 20
99001–06600	38 – 6
	38 – 16
	38 – 25
	38 – 33
99001–10600	20 – 13
99009–10400	5 – 5
99009–11400	7 – 3

PART NO.	REF. NO.
99009–12400	7 – 9
99009–52500	33 – 7
99530–08016	8 – 24
99530–10114	5 – 18
	7 – 4
	13 – 5
	14 – 3
	14 – 18
	14 – 26
99530–14016	1 – 27

PART NO.	REF. NO.

PART NO.	REF. NO.

PART NO.	REF. NO.

PART NO.	REF. NO.