YAMAHA

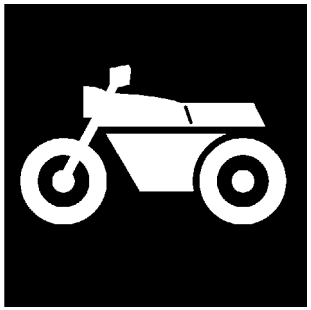

# PARTS CATALOGUE

# XVS95Y (5S71) U49
# XVS95YC (5S72) CALIFORNIA

1H5S7-110E1

( )

YAMAHA GENUINE Parts & Accessories

2009-1-15

| NEWS No. | DATE | COMMENT |
|---|---|---|
| PE0-MC-090001 | Jan.,9,2009 | MOD:FRAME/ELECTRICAL 2 LIST/ ILLUSTRATION CORRECTION |

XVS95Y/XVS95YC
PARTS CATALOGUE
©2008 by Yamaha Motor Co., Ltd.
1st edition, October 2008
All rights reserved.
Any reprinting or unauthorized use
without the written permission of
Yamaha Motor Co., Ltd.
is expressly prohibited.
Printed in Japan.

# FOREWORD

This Parts Catalogue is related to the parts for the model(s) on the cover page. When you are ordering replacement parts, please refer to this Parts Catalogue and quote both part numbers and part names correctly.

1. Modifications or additions which have been made after the issue of the Parts Catalogue will be announced in the Parts News.
   It is advisable that you make the necessary corrections to the Parts Catalogue according to the Parts News.

2. Abbreviations
   The following abbreviations are used in this Parts Catalogue.

   “UR” Use specified parts number.
   “UN” Use as many as needed.
   “AP” Alternate Parts
   “LM” Locally Made (Parts need to be ordered locally)
   “F#” Frame No. (Applicable machine No.)
   “O/S” Over Size

3. The number of components for assembly
   - Parts, which are to be supplied in an assembly, are listed with a dot (.) in front of the part name as shown below.
   - The numeral appearing to the right of each component part indicates the quantity of parts for each assembly unit.

| PART NO. | DESCRIPTION | Q’TY | REMARKS |
|---|---|---|---|
| 2F5–83310–60 | FRONT FLASHER LIGHT ASSY | 2 | |
| 115–83311–60 | .BULB (6V–18W) | 1 | |

4. Applicable colours of graphics are represented in the “REMARKS” as shown below.

| PART NO. | DESCRIPTION | Q’TY | REMARKS |
|---|---|---|---|
| 2N4–24110–00–X5 | FUEL TANK COMP. | 2 | MXR |
| 3J1–24240–10 | .GRAPHIC, FUEL TANK | 1 | FOR MXR |

5. Note that the illustrations for reference in finding parts numbers are not to be used for assembling. When assembling, please use the applicable service manual.

6. The asterisk (*) before a reference number indicates modified items after the first edition.

7. Applicable Serial No.

Engine Serial No.

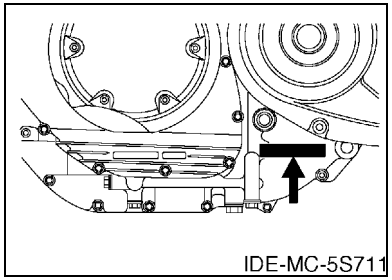


Frame Serial No.

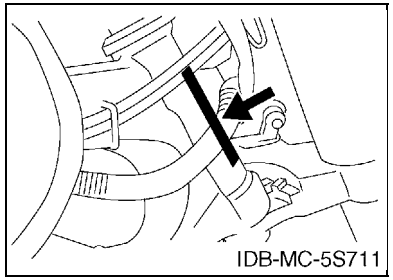


8. Applicable Colour Code (The (*) mark shows Model colour.)

| Abbreviation | Colour Name | Colour Code |
|---|---|---|
| DRMK(*) | DEEP RED METALLIC K | 0918 |
| LGB | LOW GLOSS BLACK | 0098 |
| PBM7(*) | PURPLISH BLUE METALLIC 7 | 0549 |
| | | |
| | | |
| | | |
| | | |
| | | |
| | | |
| | | |

# MODEL LABEL

(1) A label called “Model Label” is affixed in the location as indicated in (3) below.
When using this parts catalogue, please be sure to cross–reference the “model code – production code No.” in the catalogue with the “model code – production code No.” indicated on the Model Label affixed onto the product concerned.

(2) “Model Label” Indication

| a | b |
|---|---|
| ○ xxxx – xxx | |
| ● x c | |

a: Model Type Code
b: Production Code No.
c: Colouring Type

○ 4TW1–010
● A

(3) Model Label Affixing Location

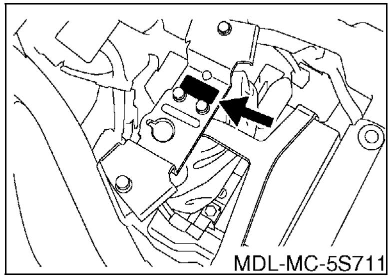


(4) Colouring Information

| Model Code | Colouring Type Code | Colour Code | Colour Name | Abbrevia-tion |
|---|---|---|---|---|
| 5S71 | B | 0918 | DEEP RED METALLIC K | DRMK |
| | C | 0549 | PURPLISH BLUE METALLIC 7 | PBM7 |
| 5S72 | B | 0918 | DEEP RED METALLIC K | DRMK |
| | C | 0549 | PURPLISH BLUE METALLIC 7 | PBM7 |
| | | | | |
| | | | | |
| | | | | |
| | | | | |
| | | | | |
| | | | | |

(5) Model Code – Production Code Number of Model Listed in This Parts Catalogue

| Model Code | Production Code No. | Country (destination) | Model Code | Production Code No. | Country (destination) |
|---|---|---|---|---|---|
| 5S71 | 010 | U49 | | | |
| 5S72 | 010 | CALIFORNIA | | | |
| | | | | | |
| | | | | | |
| | | | | | |
| | | | | | |
| | | | | | |
| | | | | | |
| | | | | | |
| | | | | | |
| | | | | | |
| | | | | | |
| | | | | | |
| | | | | | |
| | | | | | |
| | | | | | |
| | | | | | |
| | | | | | |
| | | | | | |
| | | | | | |
| | | | | | |
| | | | | | |
| | | | | | |
| | | | | | |
| | | | | | |

# CONTENTS

## ENGINE


CYLINDER HEAD ..... 1
CYLINDER ..... 3
CRANKSHAFT & PISTON ..... 4
VALVE ..... 5
CAMSHAFT & CHAIN ..... 6
OIL PUMP ..... 7
OIL CLEANER ..... 8
INTAKE 1 ..... 9
INTAKE 2 ..... 11
EXHAUST ..... 12
CRANKCASE ..... 14
CRANKCASE COVER 1 ..... 15
STARTER ..... 17
CLUTCH ..... 18
TRANSMISSION ..... 20
SHIFT CAM & FORK ..... 22
SHIFT SHAFT ..... 23


## CHASSIS


FRAME ..... 24
FENDER ..... 26
SIDE COVER ..... 28
REAR ARM & SUSPENSION ..... 30
STEERING ..... 32
FRONT FORK ..... 33
FUEL TANK ..... 35
SEAT ..... 37
FRONT WHEEL ..... 38
FRONT BRAKE CALIPER ..... 39
REAR WHEEL ..... 40
REAR BRAKE CALIPER ..... 42
STEERING HANDLE & CABLE ..... 43
FRONT MASTER CYLINDER ..... 44
STAND & FOOTREST ..... 45
REAR MASTER CYLINDER ..... 48
GENERATOR ..... 50
STARTING MOTOR ..... 51
FLASHER LIGHT ..... 52
METER ..... 54
HEADLIGHT ..... 55
TAILLIGHT ..... 56
HANDLE SWITCH & LEVER ..... 58
ELECTRICAL 1 ..... 59
ELECTRICAL 2 ..... 61


## INDEX


NUMERICAL INDEX ..... 63

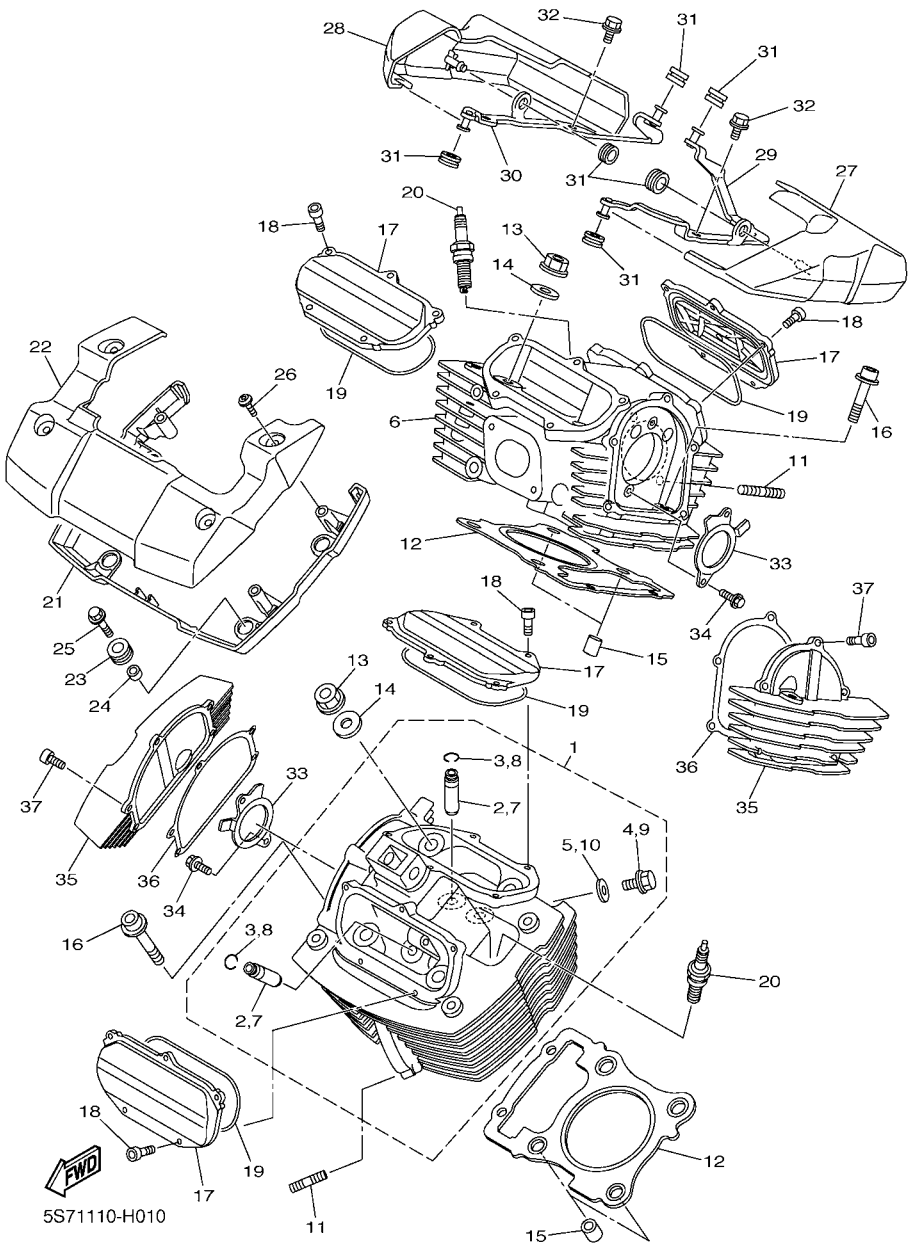


## FIG. 1 CYLINDER HEAD

| REF. NO. | PART NO. | DESCRIPTION | 5S71 | 5S72 | | | | REMARKS |
|---|---|---|---|---|---|---|---|---|
| 1 | 5S7–11101–00 | CYLINDER HEAD ASSY | 1 | 1 | | | | |
| 2 | 4G0–11133–11 | .GUIDE, VALVE 1 | 4 | 4 | | | | |
| 3 | 93440–10085 | .CIRCLIP | 4 | 4 | | | | |
| 4 | 95022–08012 | .BOLT, FLANGE | 1 | 1 | | | | |
| 5 | 90430–08119 | .GASKET | 1 | 1 | | | | |
| 6 | 5S7–11101–10 | CYLINDER HEAD ASSY | 1 | 1 | | | | |
| 7 | 4G0–11133–11 | .GUIDE, VALVE 1 | 4 | 4 | | | | |
| 8 | 93440–10085 | .CIRCLIP | 4 | 4 | | | | |
| 9 | 95022–08012 | .BOLT, FLANGE | 1 | 1 | | | | |
| 10 | 90430–08119 | .GASKET | 1 | 1 | | | | |
| 11 | 95612–08625 | BOLT, STUD | 4 | 4 | | | | |
| 12 | 5S7–11181–00 | GASKET, CYLINDER HEAD 1 | 2 | 2 | | | | |
| 13 | 90179–12004 | NUT | 8 | 8 | | | | |
| 14 | 90201–12025 | WASHER, PLATE | 8 | 8 | | | | |
| 15 | 91815–16017 | PIN, DOWEL | 4 | 4 | | | | |
| 16 | 90110–08065 | BOLT, HEXAGON SOCKET HEAD | 4 | 4 | | | | |
| 17 | 5S7–11186–00 | COVER, CYLINDER HEAD SIDE 2 | 4 | 4 | | | | |
| 18 | 91312–06016 | BOLT | 20 | 20 | | | | |
| 19 | 5S7–11196–00 | GASKET, CYLINDER HEAD SIDE | 4 | 4 | | | | |
| 20 | 94701–00420 | PLUG, SPARK (NGK CPR7EA) | 2 | 2 | | | | |
| 21 | 5S7–1111M–00 | COVER 1 | 1 | 1 | | | | |
| 22 | 5S7–1111N–00 | COVER 2 | 1 | 1 | | | | |
| 23 | 90480–14027 | GROMMET | 4 | 4 | | | | |
| 24 | 90387–084N8 | COLLAR | 4 | 4 | | | | |
| 25 | 90119–08M51 | BOLT, WITH WASHER | 4 | 4 | | | | |
| 26 | 90149–06302 | SCREW | 4 | 4 | | | | |
| 27 | 5S7–1111P–00 | COVER 3 | 1 | 1 | | | | |

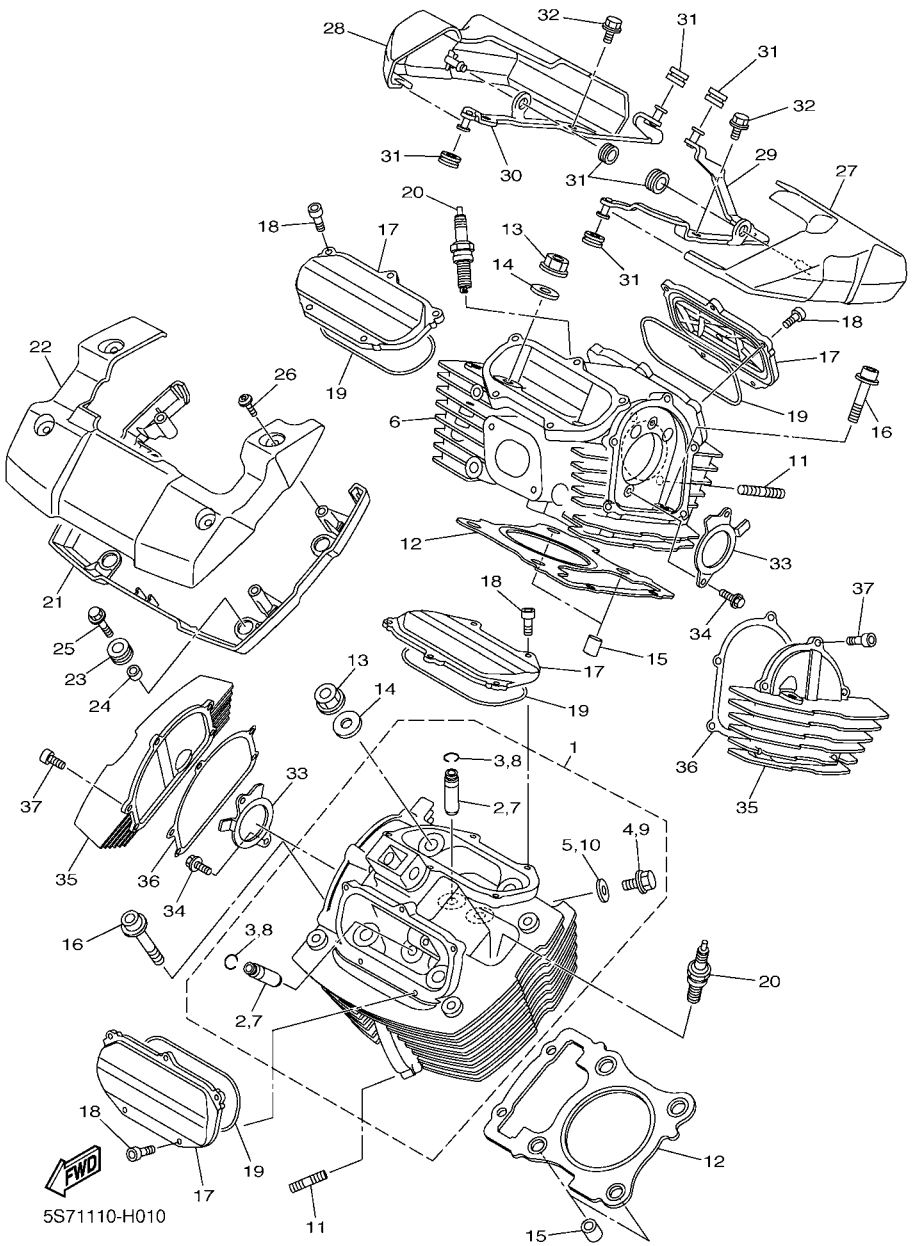


## FIG. 1 CYLINDER HEAD

| REF. NO. | PART NO. | DESCRIPTION | 5S71 | 5S72 | | | | REMARKS |
|---|---|---|---|---|---|---|---|---|
| 28 | 5S7–1111R–00 | COVER 4 | 1 | 1 | | | | |
| 29 | 5S7–1112F–00 | PLATE 2 | 1 | 1 | | | | |
| 30 | 5S7–1113F–00 | PLATE 3 | 1 | 1 | | | | |
| 31 | 90480–10627 | GROMMET | 6 | 6 | | | | |
| 32 | 95822–08020 | BOLT, FLANGE | 4 | 4 | | | | |
| 33 | 5S7–1111F–00 | PLATE | 2 | 2 | | | | |
| 34 | 95022–06012 | BOLT, FLANGE | 4 | 4 | | | | |
| 35 | 5S7–11185–00 | COVER, CYLINDER HEAD SIDE 1 | 2 | 2 | | | | |
| 36 | 5S7–11195–00 | GASKET | 2 | 2 | | | | |
| 37 | 90110–06274 | BOLT, HEXAGON SOCKET HEAD | 10 | 10 | | | | |

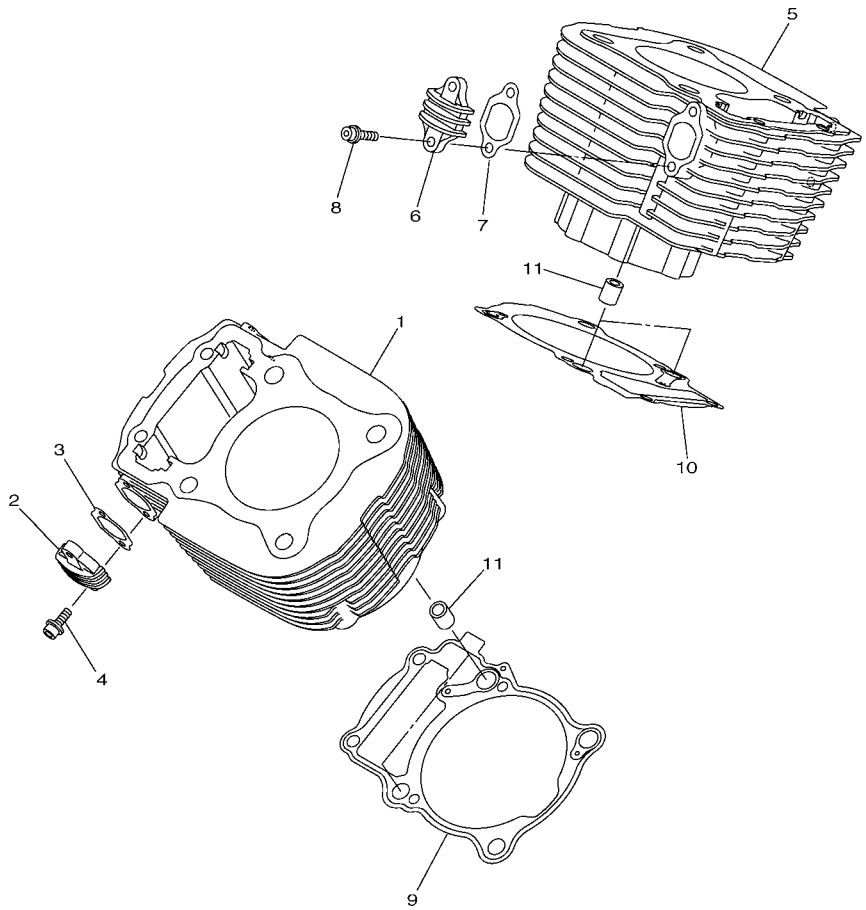

5S71110-H020

## FIG. 2 CYLINDER

| REF. NO. | PART NO. | DESCRIPTION | 5S71 | 5S72 | | | | REMARKS |
|---|---|---|---|---|---|---|---|---|
| 1 | 5S7–11311–00 | CYLINDER 1 | 1 | 1 | | | | |
| 2 | 5S7–12215–00 | CAP, TENSIONER CASE | 1 | 1 | | | | |
| 3 | 5S7–12214–00 | GASKET | 1 | 1 | | | | |
| 4 | 90110–06060 | BOLT, HEXAGON SOCKET HEAD | 2 | 2 | | | | |
| 5 | 5S7–11311–00 | CYLINDER 1 | 1 | 1 | | | | |
| 6 | 5S7–12215–00 | CAP, TENSIONER CASE | 1 | 1 | | | | |
| 7 | 5S7–12214–00 | GASKET | 1 | 1 | | | | |
| 8 | 90110–06060 | BOLT, HEXAGON SOCKET HEAD | 2 | 2 | | | | |
| 9 | 5S7–11351–00 | GASKET, CYLINDER | 1 | 1 | | | | |
| 10 | 5S7–11352–00 | GASKET, CYLINDER 2 | 1 | 1 | | | | |
| 11 | 99530–08016 | PIN, DOWEL | 4 | 4 | | | | |

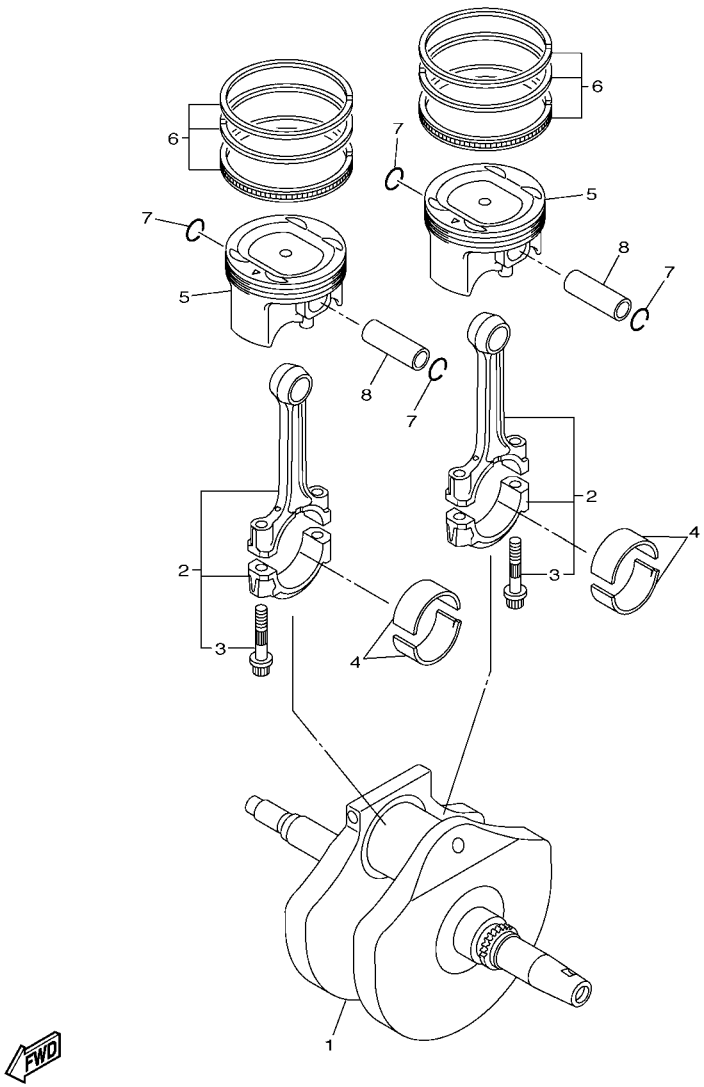


5S71110-H030

## FIG. 3 CRANKSHAFT & PISTON

| REF. NO. | PART NO. | DESCRIPTION | 5S71 | 5S72 | | | | REMARKS |
|---|---|---|---|---|---|---|---|---|
| 1 | 5S7–11411–00 | CRANKSHAFT | 1 | 1 | | | | |
| 2 | 5S7–11650–00 | CONNECTING ROD ASSY | 2 | 2 | | | | |
| 3 | 5YU–11654–00 | .BOLT, CONNECTING ROD | 2 | 2 | | | | |
| 4 | 5YU–11656–10 | PLANE BEARING, CONNECTING ROD | 4 | 4 | | | | UR BLACK |
| | 5YU–11656–20 | PLANE BEARING, CONNECTING ROD | 4 | 4 | | | | UR BROWN |
| | 5YU–11656–30 | PLANE BEARING, CONNECTING ROD | 4 | 4 | | | | UR GREEN |
| 5 | 5S7–11631–01 | PISTON (STD) | 2 | 2 | | | | |
| 6 | 5S7–11603–00 | PISTON RING SET (STD) | 2 | 2 | | | | |
| 7 | 93450–22146 | CIRCLIP | 4 | 4 | | | | |
| 8 | 5PS–11633–00 | PIN, PISTON | 2 | 2 | | | | |

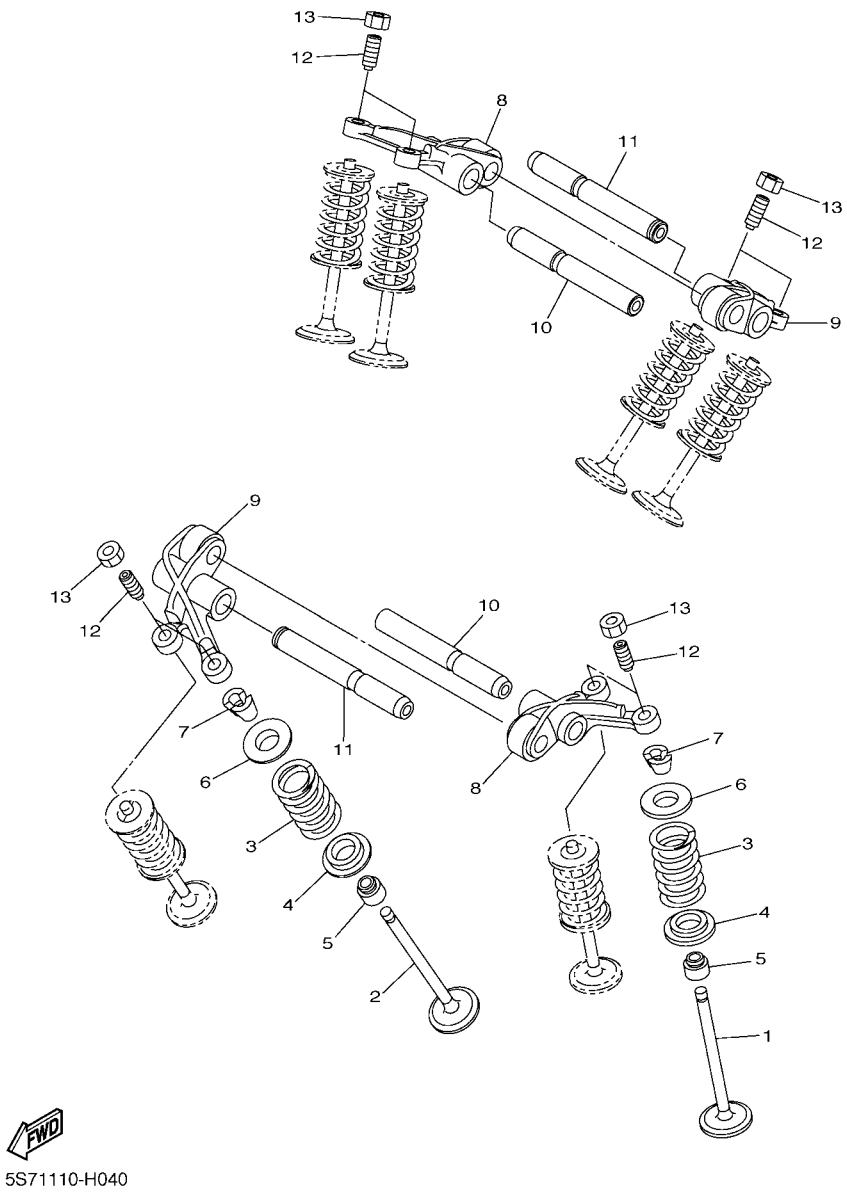


5S71110-H040

## FIG. 4 VALVE

| REF. NO. | PART NO. | DESCRIPTION | 5S71 | 5S72 | | | | REMARKS |
|---|---|---|---|---|---|---|---|---|
| 1 | 5S7–12111–00 | VALVE, INTAKE | 4 | 4 | | | | |
| 2 | 5S7–12121–00 | VALVE, EXHAUST | 4 | 4 | | | | |
| 3 | 5S7–12113–00 | SPRING, VALVE INNER | 8 | 8 | | | | |
| 4 | 3YF–12116–00 | SEAT, VALVE SPRING | 8 | 8 | | | | |
| 5 | 5H0–12119–00 | SEAL, VALVE STEM | 8 | 8 | | | | |
| 6 | 3YF–12117–01 | RETAINER, VALVE SPRING | 8 | 8 | | | | |
| 7 | 4G0–12118–00 | COTTER, VALVE | 16 | 16 | | | | |
| 8 | 5S7–12151–00 | ARM, VALVE ROCKER | 2 | 2 | | | | |
| 9 | 5S7–12161–00 | ARM, VALVE ROCKER 2 | 2 | 2 | | | | |
| 10 | 5S7–12146–00 | SHAFT, ROCKER | 2 | 2 | | | | |
| 11 | 5S7–12156–00 | SHAFT, ROCKER 2 | 2 | 2 | | | | |
| 12 | 4X7–12159–00 | SCREW, VALVE ADJUSTING | 8 | 8 | | | | |
| 13 | 90170–08173 | NUT | 8 | 8 | | | | |

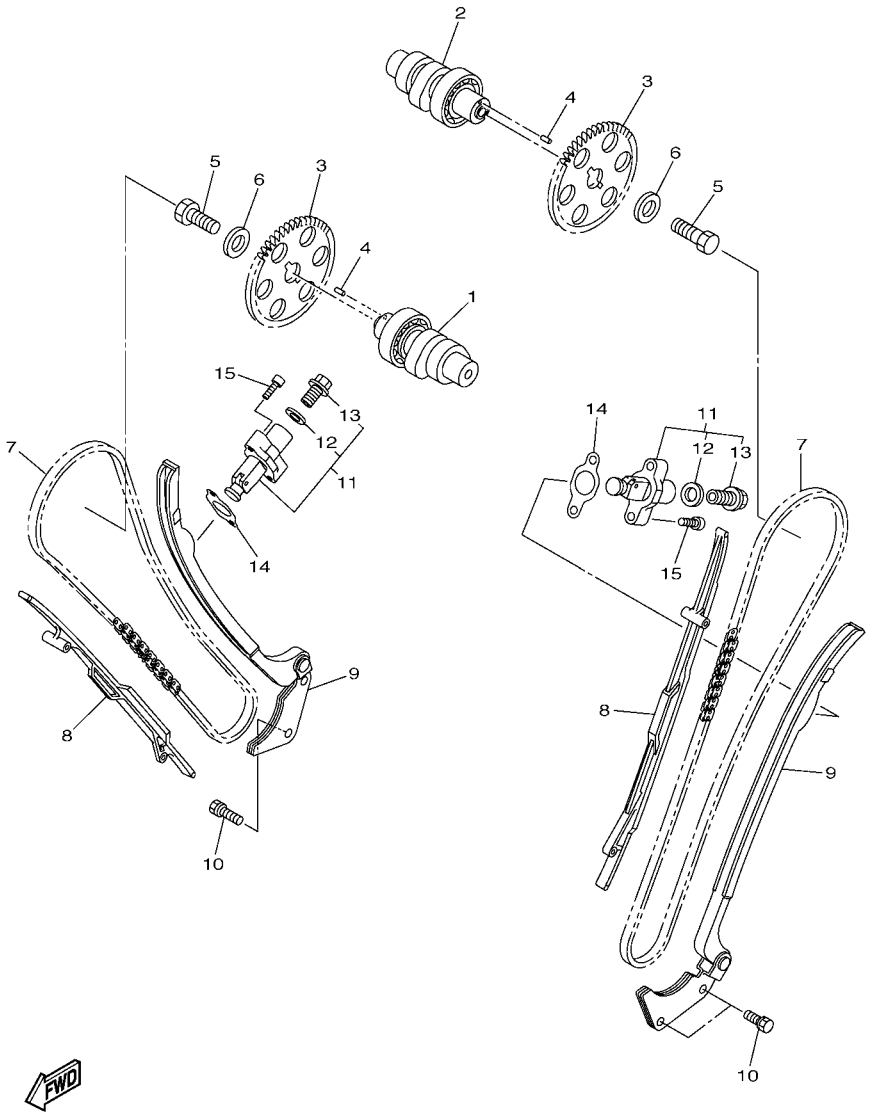


5S71110-H050

## FIG. 5 CAMSHAFT & CHAIN

| REF. NO. | PART NO. | DESCRIPTION | 5S71 | 5S72 | | | | REMARKS |
|---|---|---|---|---|---|---|---|---|
| 1 | 5S7–12170–00 | CAMSHAFT ASSY 1 | 1 | 1 | | | | |
| 2 | 5S7–12180–00 | CAMSHAFT ASSY 2 | 1 | 1 | | | | |
| 3 | 5S7–12176–00 | SPROCKET, CAM CHAIN | 2 | 2 | | | | |
| 4 | 93604–12037 | PIN, DOWEL | 2 | 2 | | | | |
| 5 | 90101–10016 | BOLT | 2 | 2 | | | | |
| 6 | 90201–10591 | WASHER, PLATE | 2 | 2 | | | | |
| 7 | 94591–59132 | CHAIN | 2 | 2 | | | | |
| 8 | 5S7–12231–00 | GUIDE, STOPPER 1 | 2 | 2 | | | | |
| 9 | 3D8–12241–00 | GUIDE, STOPPER 2 | 2 | 2 | | | | |
| 10 | 90119–06173 | BOLT, WITH WASHER | 4 | 4 | | | | |
| 11 | 31G–12210–01 | TENSIONER ASSY, CAM CHAIN | 2 | 2 | | | | |
| 12 | 31G–12214–00 | .GASKET | 1 | 1 | | | | |
| 13 | 31G–12222–00 | .PLUG | 1 | 1 | | | | |
| 14 | 3GD–12213–00 | GASKET, TENSIONER CASE | 2 | 2 | | | | |
| 15 | 91314–06025 | BOLT, HEXAGON SOCKET HEAD | 4 | 4 | | | | |

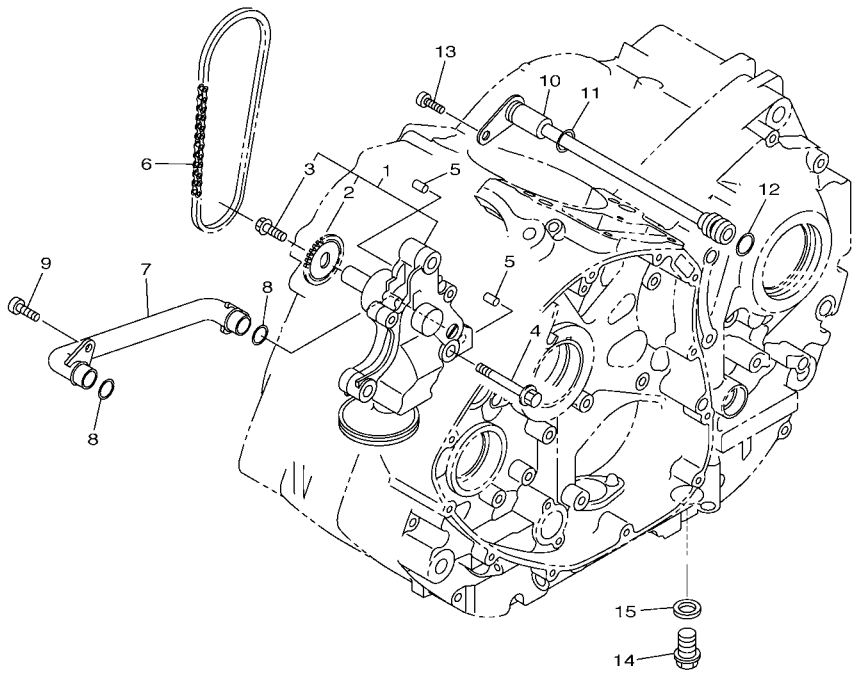

5S71110-H060

## FIG. 6 OIL PUMP

| REF. NO. | PART NO. | DESCRIPTION | 5S71 | 5S72 | | | | REMARKS |
|---|---|---|---|---|---|---|---|---|
| 1 | 5S7–13300–00 | OIL PUMP ASSY | 1 | 1 | | | | |
| 2 | 3D8–13355–00 | .SPROCKET, DRIVEN | 1 | 1 | | | | |
| 3 | 90105–06066 | .BOLT, FLANGE | 1 | 1 | | | | |
| 4 | 95812–08045 | BOLT, FLANGE | 3 | 3 | | | | |
| 5 | 99530–08012 | PIN, DOWEL | 2 | 2 | | | | |
| 6 | 94580–25062 | CHAIN (DID25 62L) | 1 | 1 | | | | |
| 7 | 3D8–13416–00 | PIPE, OIL 1 | 1 | 1 | | | | |
| 8 | 93210–14003 | O-RING | 2 | 2 | | | | |
| 9 | 90110–06161 | BOLT, HEXAGON SOCKET HEAD | 2 | 2 | | | | |
| 10 | 5S7–13171–00 | PIPE, DELIVERY 2 | 1 | 1 | | | | |
| 11 | 93210–09165 | O-RING | 1 | 1 | | | | |
| 12 | 93210–06564 | O-RING | 1 | 1 | | | | |
| 13 | 90110–06161 | BOLT, HEXAGON SOCKET HEAD | 1 | 1 | | | | |
| 14 | 90340–14132 | PLUG, STRAIGHT SCREW | 1 | 1 | | | | |
| 15 | 214–11198–01 | GASKET | 1 | 1 | | | | |

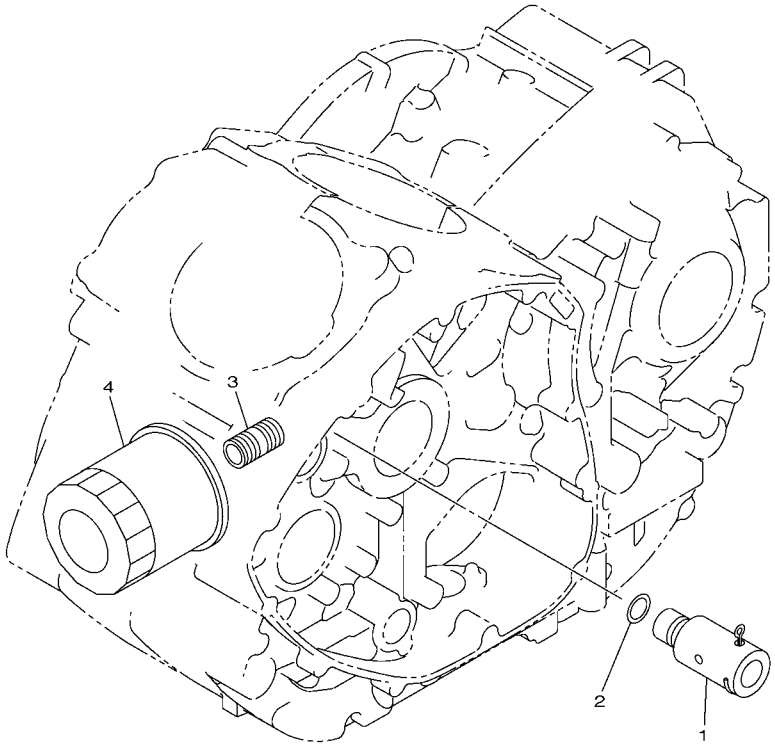

5S71110-H070

## FIG. 7 OIL CLEANER

| REF. NO. | PART NO. | DESCRIPTION | 5S71 | 5S72 | | | | REMARKS |
|---|---|---|---|---|---|---|---|---|
| 1 | 3D8–13490–00 | RELIEF VALVE ASSY | 1 | 1 | | | | |
| 2 | 93210–10096 | O-RING | 1 | 1 | | | | |
| 3 | 90401–20003 | BOLT, UNION | 1 | 1 | | | | |
| 4 | 5GH–13440–20 | ELEMENT ASSY, OIL CLEANER | 1 | 1 | | | | |

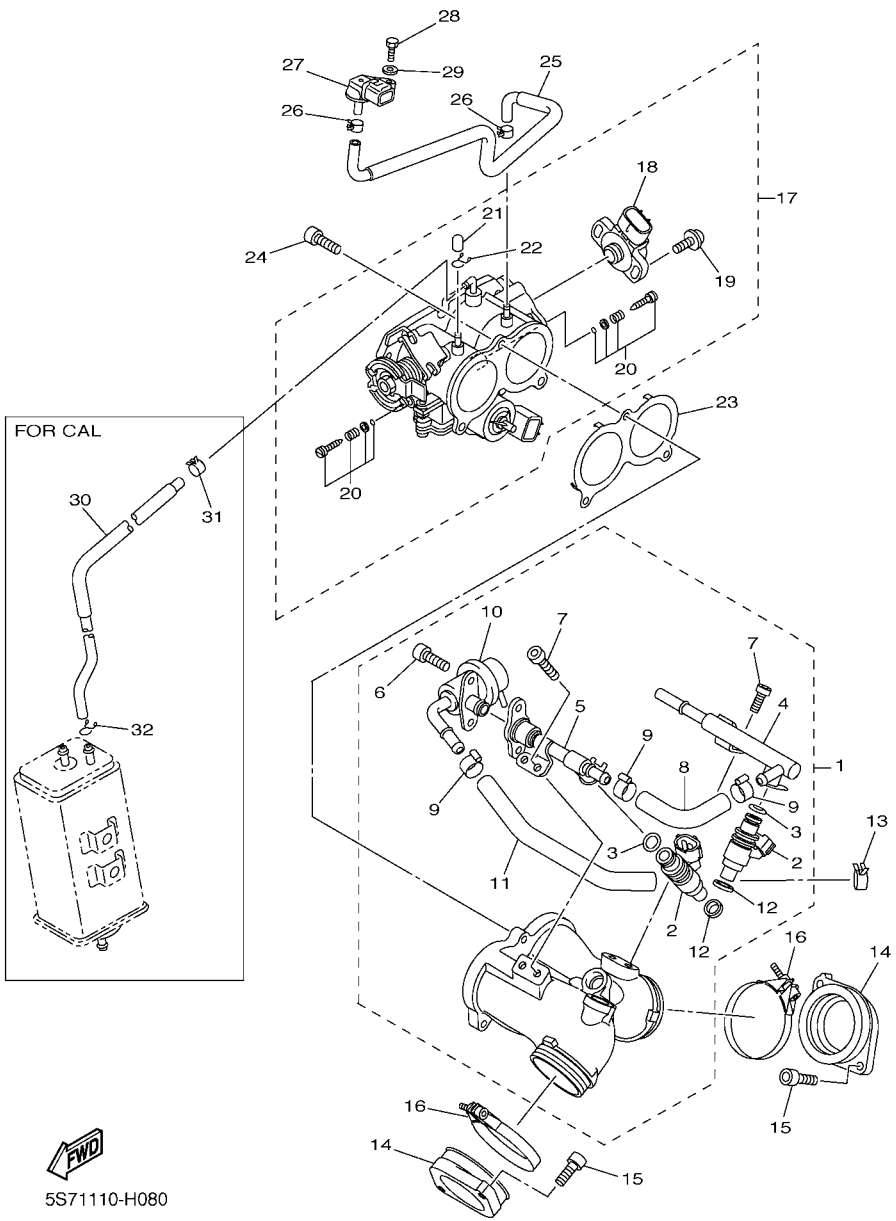


## FIG. 8 INTAKE 1

| REF. NO. | PART NO. | DESCRIPTION | 5S71 | 5S72 | | | | REMARKS |
|---|---|---|---|---|---|---|---|---|
| 1 | 5S7–13590–00 | CARBURETOR JOINT ASSY | 1 | 1 | | | | |
| 2 | 5S7–13761–00 | .INJECTOR | 2 | 2 | | | | |
| 3 | 5PS–14147–00 | .O-RING | 1 | 1 | | | | |
| 4 | 5S7–14349–00 | .PIPE | 1 | 1 | | | | |
| 5 | 5S7–14348–00 | .PIPE 1 | 1 | 1 | | | | |
| 6 | 91312–05010 | .BOLT | 2 | 2 | | | | |
| 7 | 90110–06168 | .BOLT, HEXAGON SOCKET HEAD | 4 | 4 | | | | |
| 8 | 5S7–13926–00 | .HOSE | 1 | 1 | | | | |
| 9 | 68V–24387–00 | .CLIP | 3 | 3 | | | | |
| 10 | 5S7–13906–00 | .REGULATOR, PRESSURE | 1 | 1 | | | | |
| 11 | 5S7–24312–00 | .PIPE 2 | 1 | 1 | | | | |
| 12 | 8FP–13556–00 | .GASKET, MANIFOLD | 2 | 2 | | | | |
| 13 | 90467–12003 | CLIP | 1 | 1 | | | | |
| 14 | 5S7–13586–00 | JOINT, CARBURETOR 1 | 2 | 2 | | | | |
| 15 | 91312–06020 | BOLT | 4 | 4 | | | | |
| 16 | 90450–54006 | HOSE CLAMP ASSY | 2 | 2 | | | | |
| 17 | 5S7–13750–00 | THROTTLE BODY ASSY | 1 | | | | | |
| | 5S7–13750–10 | THROTTLE BODY ASSY | | 1 | | | | FOR CALIFORNIA |
| 18 | 8GL–85885–00 | .THROTTLE SENSOR ASSY | 1 | 1 | | | | |
| 19 | 4KM–24453–00 | .SCREW | 2 | 2 | | | | |
| 20 | 3D8–14104–00 | .AIR SCREW SET | 2 | 2 | | | | |
| 21 | 895–14169–00 | .CAP | 1 | 1 | | | | |
| 22 | 8A7–14139–00 | .CLIP, PIPE | 1 | 1 | | | | |
| 23 | 3D8–14467–00 | SEAL | 1 | 1 | | | | |
| 24 | 91312–06020 | BOLT | 3 | 3 | | | | |
| 25 | 5S7–13895–00 | HOSE, AIR | 1 | 1 | | | | |
| 26 | 90467–07093 | CLIP | 2 | 2 | | | | |

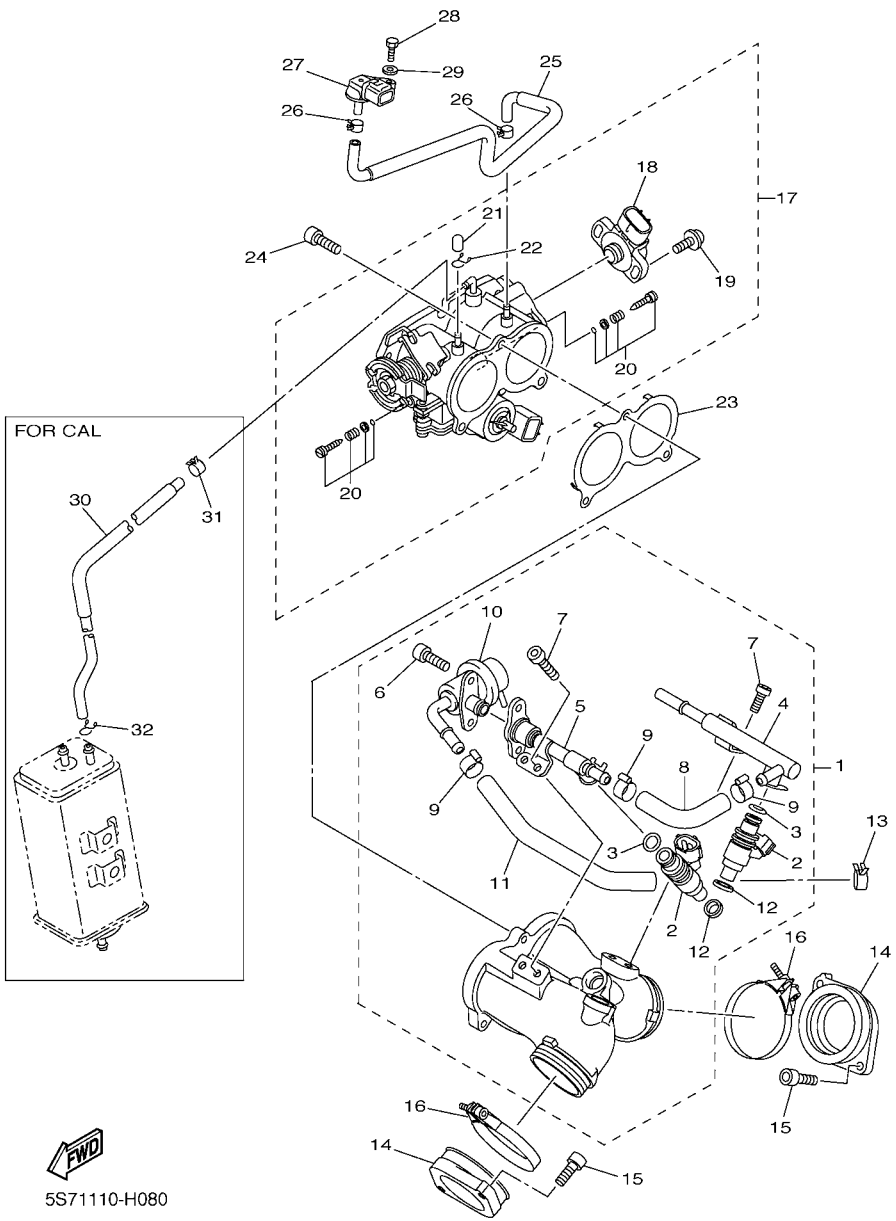


## FIG. 8 INTAKE 1

| REF. NO. | PART NO. | DESCRIPTION | 5S71 | 5S72 | | | | REMARKS |
|---|---|---|---|---|---|---|---|---|
| 27 | 5S7–82380–00 | SENSOR, PRESSURE | 1 | 1 | | | | |
| 28 | 97002–05020 | BOLT | 1 | 1 | | | | |
| 29 | 92902–05600 | WASHER, PLATE | 1 | 1 | | | | |
| 30 | 5S7–14148–00 | PIPE | | 1 | | | | FOR CALIFORNIA |
| 31 | 90467–09037 | CLIP | | 1 | | | | FOR CALIFORNIA |
| 32 | 90467–09103 | CLIP | | 1 | | | | FOR CALIFORNIA |

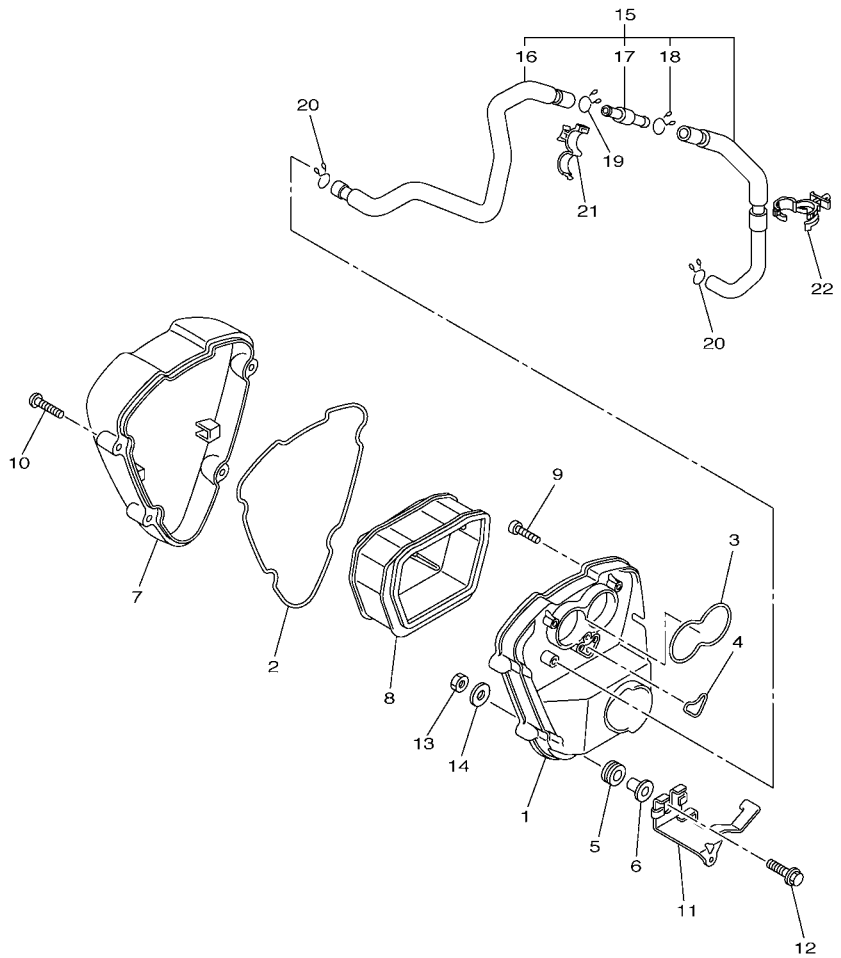


5S71110-H090

## FIG. 9 INTAKE 2

| REF. NO. | PART NO. | DESCRIPTION | 5S71 | 5S72 | | | | REMARKS |
|---|---|---|---|---|---|---|---|---|
| 1 | 5S7–14411–00 | CASE, AIR CLEANER 1 | 1 | 1 | | | | |
| 2 | 4GA–14452–00 | SEAL | 1 | 1 | | | | |
| 3 | 3D8–14457–00 | SEAL | 1 | 1 | | | | |
| 4 | 3D8–14462–00 | SEAL | 1 | 1 | | | | |
| 5 | 90480–11006 | GROMMET | 1 | 1 | | | | |
| 6 | 90387–087L0 | COLLAR | 1 | 1 | | | | |
| 7 | 3D8–14421–00 | CASE, AIR CLEANER 2 | 1 | 1 | | | | |
| 8 | 3D8–14451–00 | ELEMENT, AIR CLEANER | 1 | 1 | | | | |
| 9 | 91312–05025 | BOLT | 3 | 3 | | | | |
| 10 | 90111–05024 | BOLT,HEX. SOCKET BUTTON | 4 | 4 | | | | |
| 11 | 3D8–14498–01 | STAY 1 | 1 | 1 | | | | |
| 12 | 97012–06020 | BOLT | 1 | 1 | | | | |
| 13 | 95702–06500 | NUT, FLANGE | 1 | 1 | | | | |
| 14 | 90201–06088 | WASHER, PLATE | 1 | 1 | | | | |
| 15 | 5S7–11166–00 | PIPE, BREATHER 1 | 1 | 1 | | | | |
| 16 | 5S7–1113J–00 | .PIPE 3 | 1 | 1 | | | | |
| 17 | 6S5–12594–00 | .JOINT, HOSE 4 | 1 | 1 | | | | |
| 18 | 90467–170A2 | .CLIP | 1 | 1 | | | | |
| 19 | 90467–170A2 | CLIP | 1 | 1 | | | | |
| 20 | 90467–16195 | CLIP | 2 | 2 | | | | |
| 21 | 90464–20191 | CLAMP | 1 | 1 | | | | |
| 22 | 90464–18011 | CLAMP | 1 | 1 | | | | |

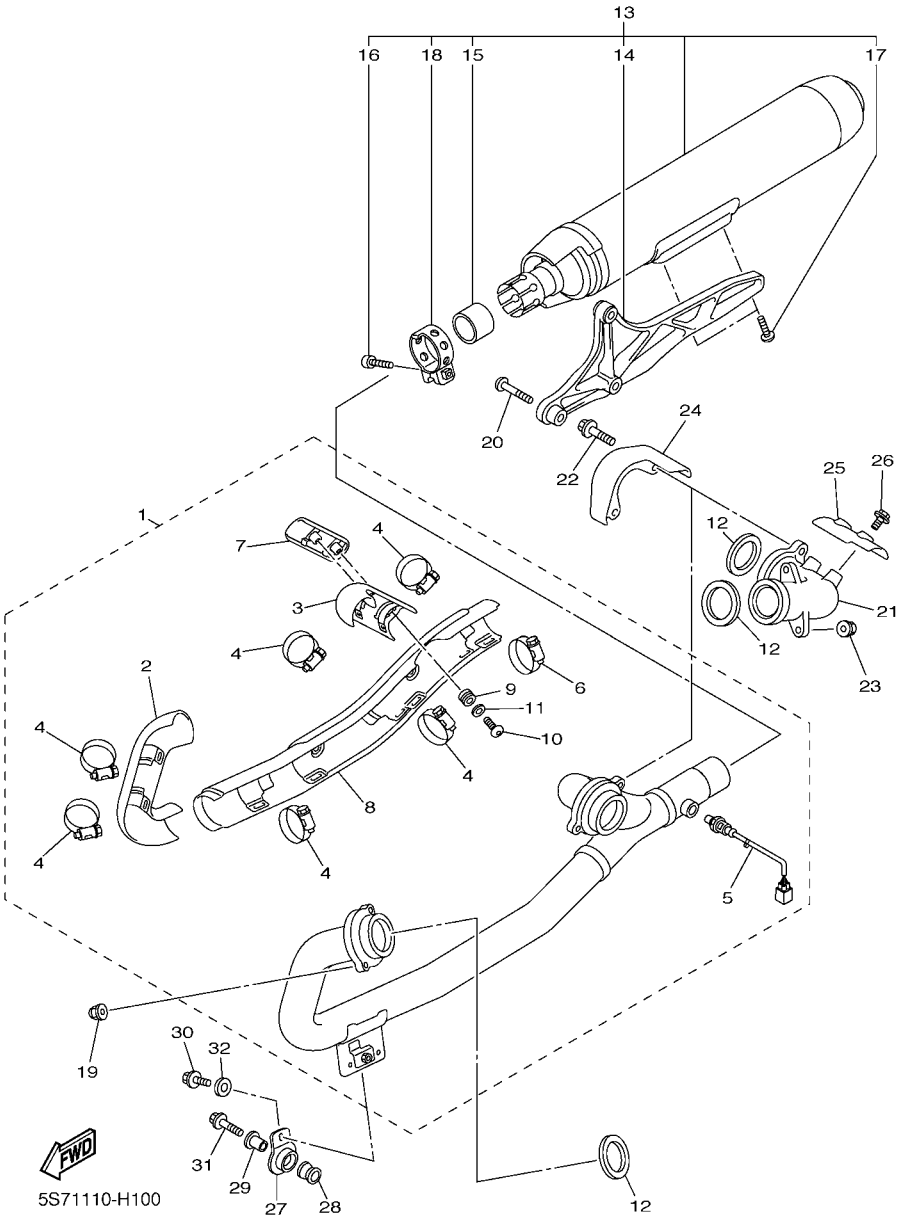


## FIG. 10 EXHAUST

| REF. NO. | PART NO. | DESCRIPTION | 5S71 | 5S72 | | | | REMARKS |
|---|---|---|---|---|---|---|---|---|
| 1 | 5S7–14610–00 | EXHAUST PIPE ASSY 1 | 1 | 1 | | | | |
| 2 | 5S7–14718–00 | .PROTECTOR, MUFFLER 1 | 1 | 1 | | | | |
| 3 | 5S7–14728–00 | .PROTECTOR, MUFFLER 2 | 1 | 1 | | | | |
| 4 | 90450–40001 | .HOSE CLAMP ASSY | 6 | 6 | | | | |
| 5 | 5S7–8592A–00 | .SENSOR, OXYGEN | 1 | 1 | | | | |
| 6 | 90450–45001 | .HOSE CLAMP ASSY | 1 | 1 | | | | |
| 7 | 5S7–14748–00 | .PROTECTOR, MUFFLER 4 | 1 | 1 | | | | |
| 8 | 5S7–14738–00 | .PROTECTOR, MUFFLER 3 | 1 | 1 | | | | |
| 9 | 90480–17005 | .GROMMET | 2 | 2 | | | | |
| 10 | 90149–06280 | .SCREW | 2 | 2 | | | | |
| 11 | 90201–064K6 | .WASHER, PLATE | 2 | 2 | | | | |
| 12 | 3EG–14613–00 | GASKET, EXHAUST PIPE | 3 | 3 | | | | |
| 13 | 5S7–14710–00 | MUFFLER ASSY 1 | 1 | 1 | | | | |
| 14 | 5S7–14772–00 | .STAY, MUFFLER 2 | 1 | 1 | | | | |
| 15 | 5YU–14755–00 | .GASKET, SILENCER | 1 | 1 | | | | |
| 16 | 91314–08040 | .BOLT, HEXAGON SOCKET HEAD | 1 | 1 | | | | |
| 17 | 90111–10006 | .BOLT,HEX. SOCKET BUTTON | 2 | 2 | | | | |
| 18 | 5S7–14715–00 | .BAND, MUFFLER | 1 | 1 | | | | |
| 19 | 90176–08006 | NUT, CROWN | 2 | 2 | | | | |
| 20 | 90111–10032 | BOLT,HEX. SOCKET BUTTON | 3 | 3 | | | | |
| 21 | 5S7–14615–00 | JOINT, EXHAUST 1 | 1 | 1 | | | | |
| 22 | 95814–08035 | BOLT, FLANGE | 2 | 2 | | | | |
| 23 | 90185–08097 | NUT, SELF-LOCKING | 2 | 2 | | | | |
| 24 | 5S7–14624–00 | COVER, EXHAUST | 1 | 1 | | | | |
| 25 | 5S7–1468W–00 | PLATE, SILENCER 3 | 1 | 1 | | | | |
| 26 | 95880–06010 | BOLT, FLANGE | 2 | 2 | | | | |
| 27 | 5S7–14649–00 | STAY, EXHAUST PIPE 2 | 1 | 1 | | | | |

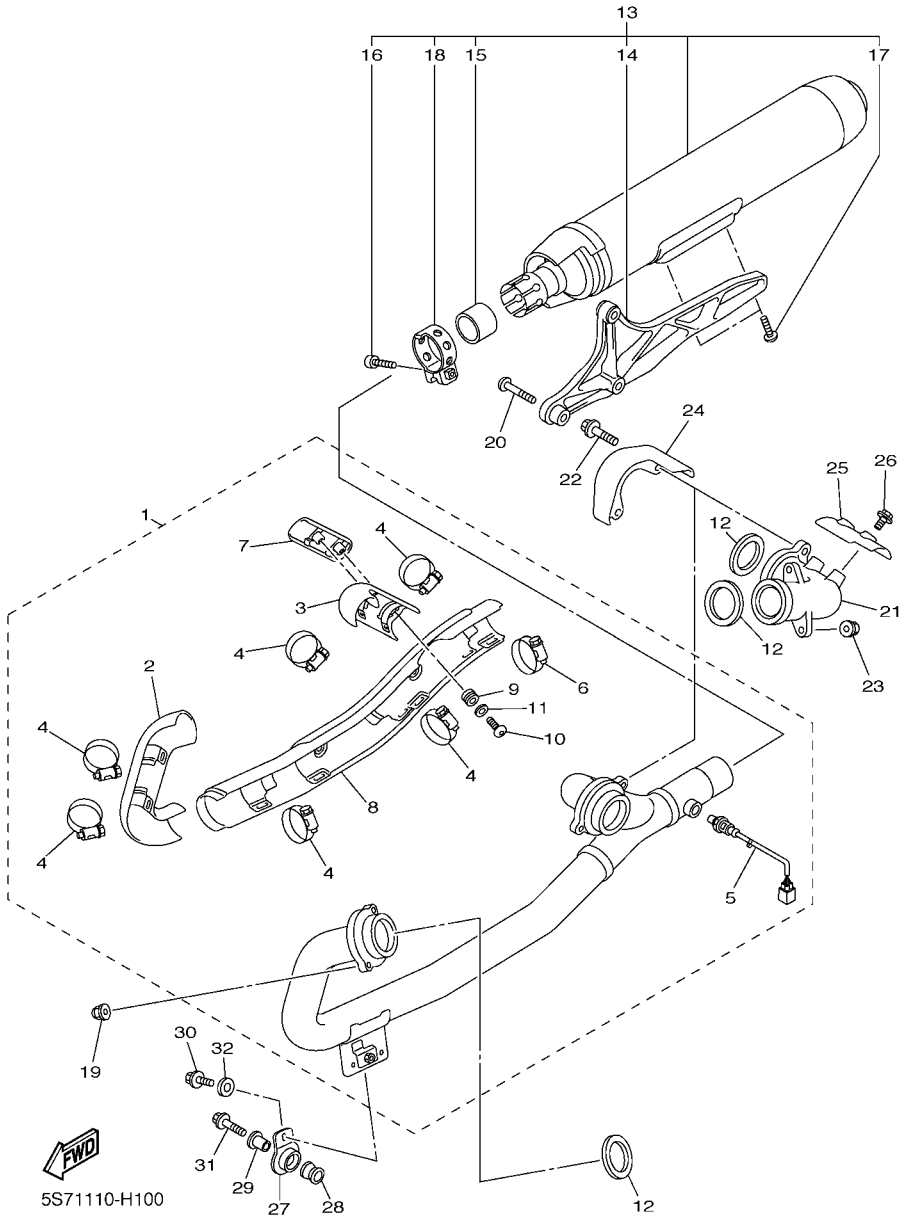


## FIG. 10 EXHAUST

| REF. NO. | PART NO. | DESCRIPTION | 5S71 | 5S72 | | | | REMARKS |
|---|---|---|---|---|---|---|---|---|
| 28 | 5VY–14747–00 | DAMPER, MUFFLER | 1 | 1 | | | | |
| 29 | 90387–08021 | COLLAR | 1 | 1 | | | | |
| 30 | 95817–08020 | BOLT, FLANGE | 1 | 1 | | | | |
| 31 | 95817–08030 | BOLT, FLANGE | 1 | 1 | | | | |
| 32 | 90201–087A9 | WASHER, PLATE | 1 | 1 | | | | |

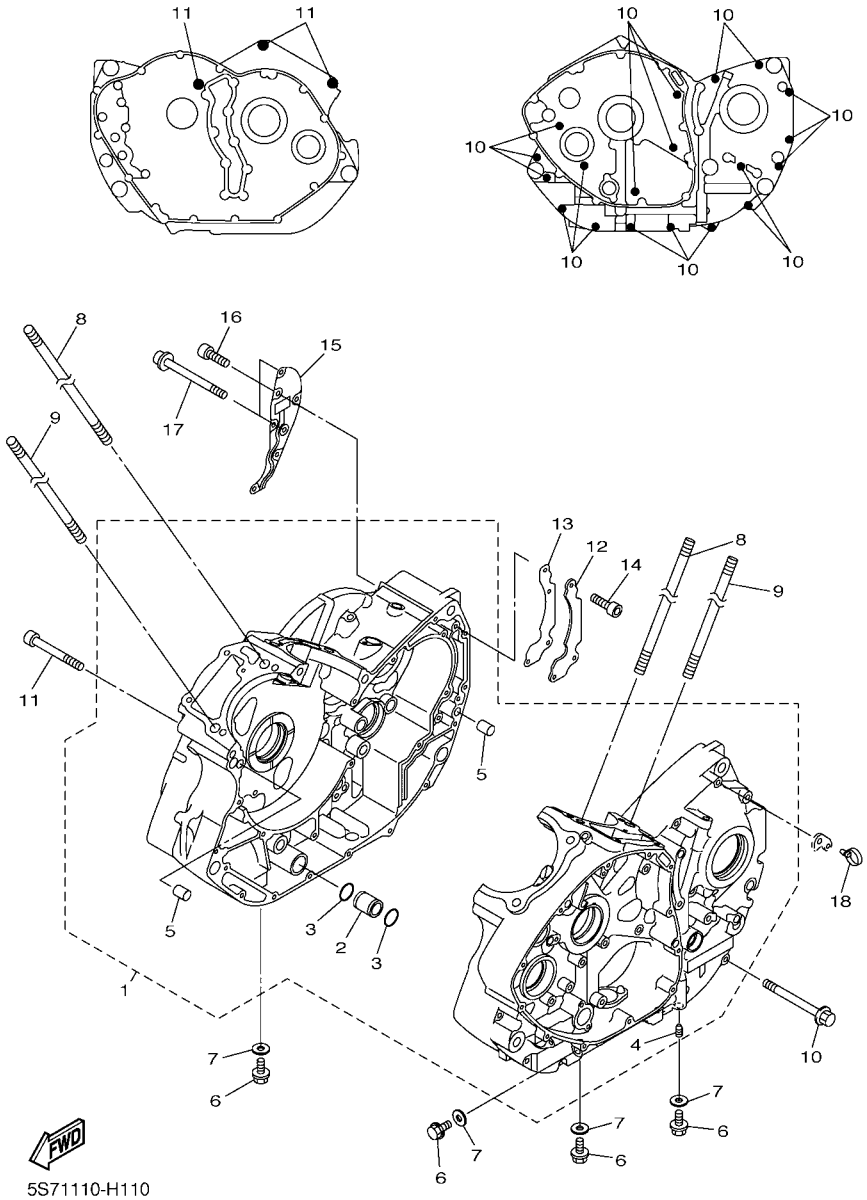


## FIG. 11 CRANKCASE

| REF. NO. | PART NO. | DESCRIPTION | 5S71 | 5S72 | | | | REMARKS |
|---|---|---|---|---|---|---|---|---|
| 1 | 5S7–15100–00 | CRANKCASE ASSY | 1 | 1 | | | | |
| 2 | 3D8–15154–00 | .NOZZLE ASSY., 2 | 1 | 1 | | | | |
| 3 | 93210–18319 | .O-RING | 2 | 2 | | | | |
| 4 | 2H7–15138–00 | .NOZZLE 1 | 1 | 1 | | | | |
| 5 | 99530–10116 | .PIN, DOWEL | 2 | 2 | | | | |
| 6 | 95022–10016 | BOLT, FLANGE | 4 | 4 | | | | |
| 7 | 90430–10171 | GASKET | 4 | 4 | | | | |
| 8 | 90116–12012 | BOLT, STUD | 6 | 6 | | | | |
| 9 | 90116–12011 | BOLT, STUD | 2 | 2 | | | | |
| 10 | 90105–06144 | BOLT, FLANGE | 19 | 19 | | | | |
| 11 | 90110–10030 | BOLT, HEXAGON SOCKET HEAD | 3 | 3 | | | | |
| 12 | 3D8–15358–00 | SEPARATOR, OIL | 1 | 1 | | | | |
| 13 | 3D8–15353–00 | GASKET, DRAIN | 1 | 1 | | | | |
| 14 | 90110–06161 | BOLT, HEXAGON SOCKET HEAD | 3 | 3 | | | | |
| 15 | 3D8–15368–00 | SEPERATOR, OIL | 1 | 1 | | | | |
| 16 | 90110–06161 | BOLT, HEXAGON SOCKET HEAD | 5 | 5 | | | | |
| 17 | 90110–06270 | BOLT, HEXAGON SOCKET HEAD | 2 | 2 | | | | |
| 18 | 90464–16006 | CLAMP | 1 | 1 | | | | |

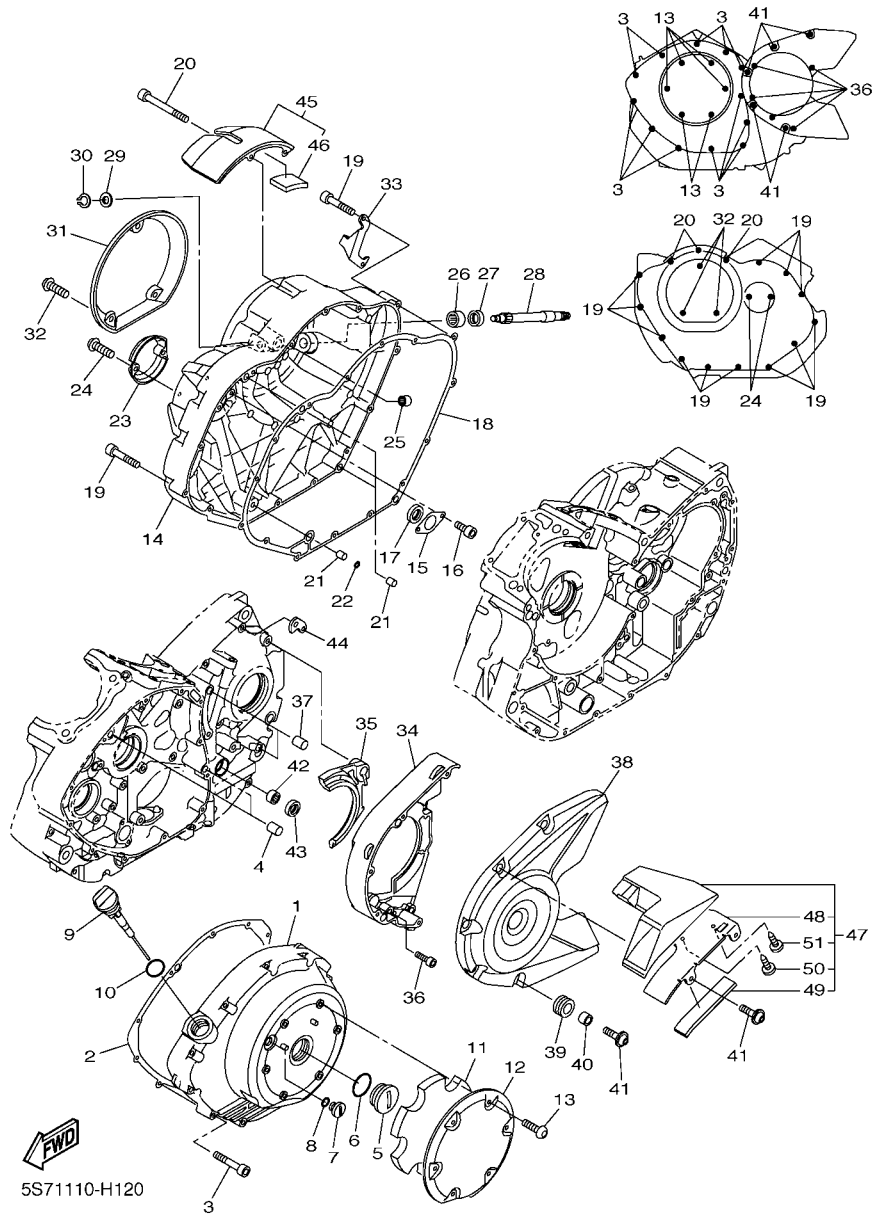


## FIG. 12 CRANKCASE COVER 1

| REF. NO. | PART NO. | DESCRIPTION | 5S71 | 5S72 | | | | REMARKS |
|---|---|---|---|---|---|---|---|---|
| 1 | 5S7–15411–00 | COVER, CRANKCASE 1 | 1 | 1 | | | | |
| 2 | 3D8–15451–00 | GASKET, CRANKCASE COVER 1 | 1 | 1 | | | | |
| 3 | 90110–06086 | BOLT, HEXAGON SOCKET HEAD | 12 | 12 | | | | |
| 4 | 99530–08012 | PIN, DOWEL | 2 | 2 | | | | |
| 5 | 90340–36078 | PLUG, STRAIGHT SCREW | 1 | 1 | | | | |
| 6 | 93210–357A3 | O-RING | 1 | 1 | | | | |
| 7 | 90340–14117 | PLUG, STRAIGHT SCREW | 1 | 1 | | | | |
| 8 | 93210–14369 | O-RING | 1 | 1 | | | | |
| 9 | 5S7–15362–00 | PLUG, OIL LEVEL | 1 | 1 | | | | |
| 10 | 93210–27370 | O-RING | 1 | 1 | | | | |
| 11 | 3D8–1542A–01 | DAMPER 1 | 1 | 1 | | | | |
| 12 | 3D8–15492–00 | COVER | 1 | 1 | | | | |
| 13 | 92014–06014 | BOLT, BUTTON HEAD | 6 | 6 | | | | |
| 14 | 5S7–15421–00 | COVER, CRANKCASE 2 | 1 | 1 | | | | |
| 15 | 3D8–15388–00 | PLATE, BEARING COVER | 1 | 1 | | | | |
| 16 | 90110–06182 | BOLT, HEXAGON SOCKET HEAD | 2 | 2 | | | | |
| 17 | 93101–14102 | OIL SEAL | 1 | 1 | | | | |
| 18 | 3D8–15461–00 | GASKET, CRANKCASE COVER 2 | 1 | 1 | | | | |
| 19 | 90110–06086 | BOLT, HEXAGON SOCKET HEAD | 12 | 12 | | | | |
| 20 | 90110–06334 | BOLT, HEXAGON SOCKET HEAD | 3 | 3 | | | | |
| 21 | 99530–08012 | PIN, DOWEL | 3 | 3 | | | | |
| 22 | 93210–07135 | O-RING | 1 | 1 | | | | |
| 23 | 3D8–15423–01 | COVER 2 | 1 | 1 | | | | |
| 24 | 92014–06014 | BOLT, BUTTON HEAD | 2 | 2 | | | | |
| 25 | 93317–11096 | BEARING | 1 | 1 | | | | |
| 26 | 93315–31502 | BEARING | 1 | 1 | | | | |
| 27 | 93102–15212 | OIL SEAL | 1 | 1 | | | | |

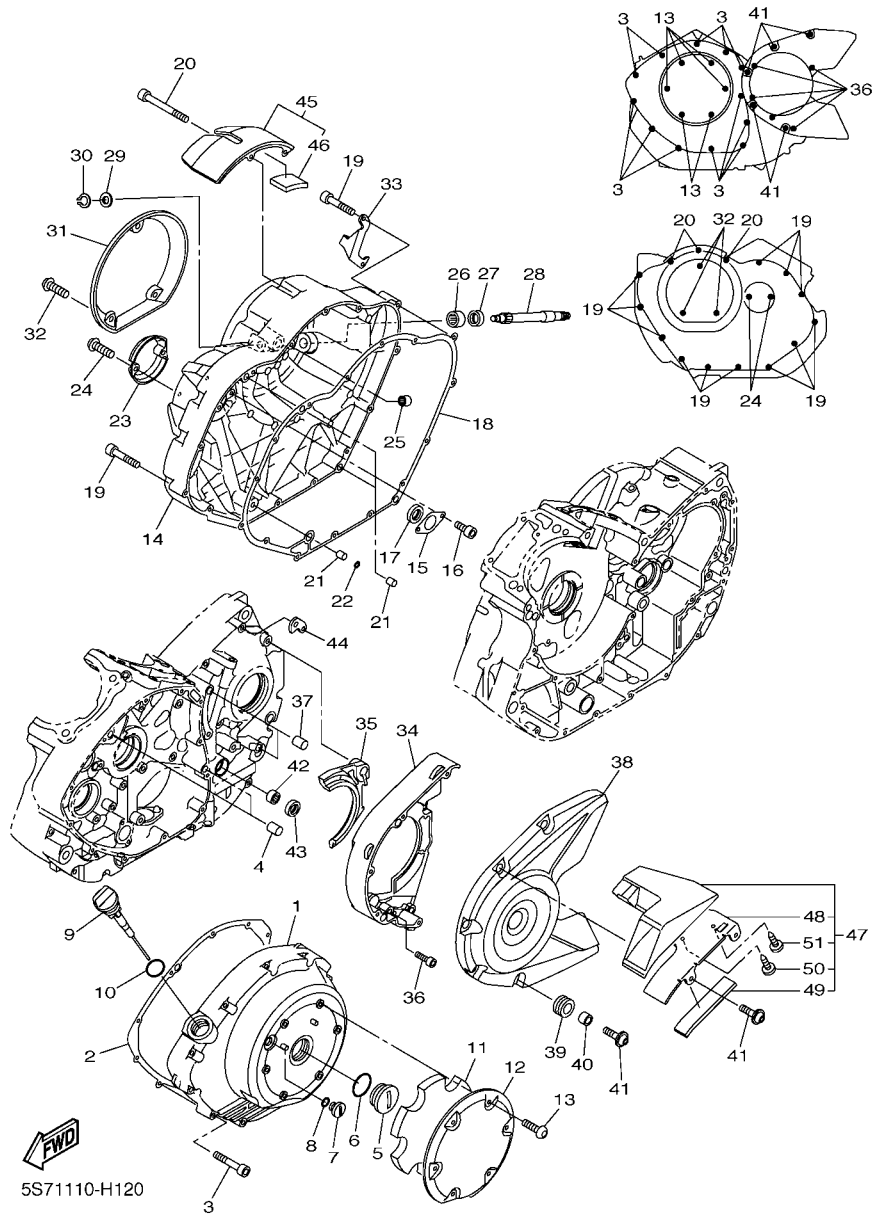


## FIG. 12 CRANKCASE COVER 1

| REF. NO. | PART NO. | DESCRIPTION | 5S71 | 5S72 | | | | REMARKS |
|---|---|---|---|---|---|---|---|---|
| 28 | 3D8–16382–00 | AXLE, PUSH LEVER | 1 | 1 | | | | |
| 29 | 92902–08600 | WASHER, PLATE | 1 | 1 | | | | |
| 30 | 99002–07600 | CLIP | 1 | 1 | | | | |
| 31 | 5S7–15415–00 | COVER, GENERATOR | 1 | 1 | | | | |
| 32 | 92014–06014 | BOLT, BUTTON HEAD | 3 | 3 | | | | |
| 33 | 3D8–15441–00 | HOLDER, CLUTCH CABLE | 1 | 1 | | | | |
| 34 | 3D8–1541A–01 | STAY,CRANKCASECOVER 1 | 1 | 1 | | | | |
| 35 | 3D8–15337–02 | DAMPER 4 | 1 | 1 | | | | |
| 36 | 91312–08035 | BOLT | 5 | 5 | | | | |
| 37 | 99590–10114 | PIN, DOWEL | 2 | 2 | | | | |
| 38 | 5S7–15426–00 | COVER, OIL PUMP 2 | 1 | 1 | | | | |
| 39 | 90480–13022 | GROMMET | 5 | 5 | | | | |
| 40 | 90387–06043 | COLLAR | 5 | 5 | | | | |
| 41 | 90111–06130 | BOLT,HEX. SOCKET BUTTON | 5 | 5 | | | | |
| 42 | 93317–11287 | BEARING | 1 | 1 | | | | |
| 43 | 93102–12106 | OIL SEAL (SD 12-22-5 HS) | 1 | 1 | | | | |
| 44 | 3D8–15544–00 | STAY 1 | 1 | 1 | | | | |
| 45 | 5S7–15499–00 | PROTECTOR, COVER | 1 | 1 | | | | |
| 46 | 5S7–15789–00 | .DAMPER | 2 | 2 | | | | |
| 47 | 5S7–15470–00 | AIR DUCT ASSY | 1 | 1 | | | | |
| 48 | 5S7–15113–00 | .PLATE | 1 | 1 | | | | |
| 49 | 5S7–15316–00 | .DAMPER 1 | 1 | 1 | | | | |
| 50 | 97702–40014 | .SCREW, TAPPING | 2 | 2 | | | | |
| 51 | 97702–40010 | .SCREW, TAPPING | 1 | 1 | | | | |

## FIG. 13 STARTER

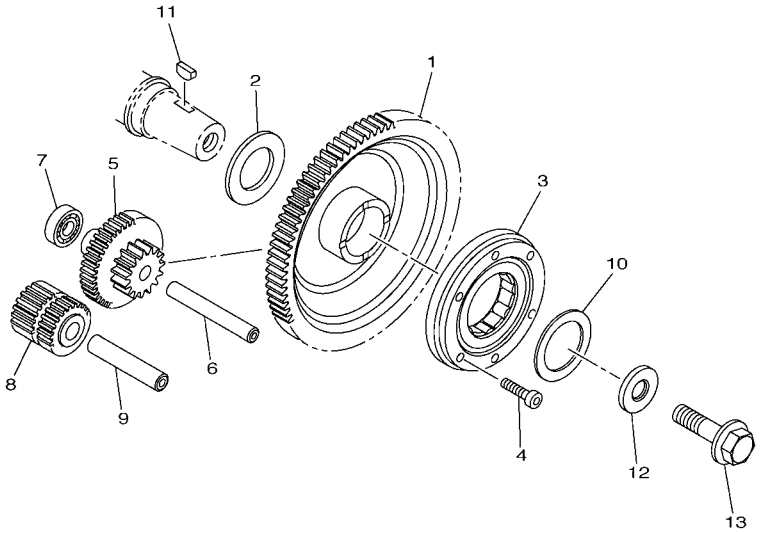

5S71110-H130

| REF. NO. | PART NO. | DESCRIPTION | 5S71 | 5S72 | | | | REMARKS |
|---|---|---|---|---|---|---|---|---|
| 1 | 5S7–15515–00 | GEAR 3 | 1 | 1 | | | | |
| 2 | 5S7–15561–00 | WASHER | 1 | 1 | | | | |
| 3 | 3LD–15590–02 | STARTER ONE-WAY ASSY | 1 | 1 | | | | |
| 4 | 90110–06169 | BOLT, HEXAGON SOCKET HEAD | 6 | 6 | | | | |
| 5 | 5S7–15512–00 | GEAR, IDLER 1 | 1 | 1 | | | | |
| 6 | 1D7–15521–00 | SHAFT 1 | 1 | 1 | | | | |
| 7 | 93306–00006 | BEARING | 1 | 1 | | | | |
| 8 | 3D8–15512–00 | GEAR, IDLER 1 | 1 | 1 | | | | |
| 9 | 4WM–15522–00 | SHAFT 2 | 1 | 1 | | | | |
| 10 | 90201–350F3 | WASHER, PLATE | 1 | 1 | | | | |
| 11 | 90280–05048 | KEY, WOODRUFF | 1 | 1 | | | | |
| 12 | 90201–12008 | WASHER, PLATE | 1 | 1 | | | | |
| 13 | 90105–12584 | BOLT, FLANGE | 1 | 1 | | | | |

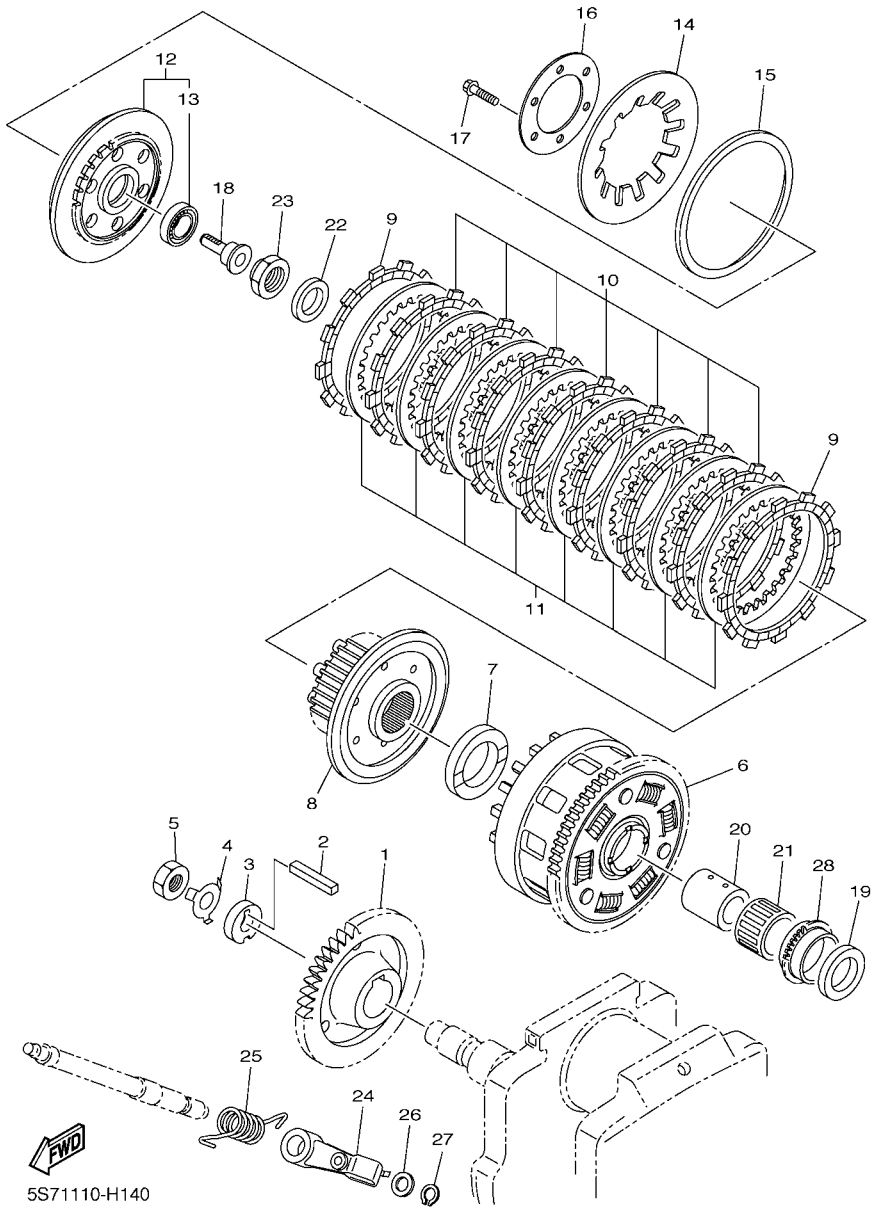


## FIG. 14 CLUTCH

| REF. NO. | PART NO. | DESCRIPTION | 5S71 | 5S72 | | | | REMARKS |
|---|---|---|---|---|---|---|---|---|
| 1 | 5S7–16111–00 | GEAR, PRIMARY DRIVE | 1 | 1 | | | | |
| 2 | 4WM–16193–00 | KEY, FEATHER | 1 | 1 | | | | |
| 3 | 3D8–16181–00 | SPACER 1 | 1 | 1 | | | | |
| 4 | 90215–18003 | WASHER, LOCK | 1 | 1 | | | | |
| 5 | 90170–18008 | NUT | 1 | 1 | | | | |
| 6 | 5S7–16150–00 | PRIMARY DRIVEN GEAR COMP. | 1 | 1 | | | | |
| 7 | 5YU–16154–00 | PLATE, THRUST 1 | 1 | 1 | | | | |
| 8 | 3D8–16371–00 | BOSS, CLUTCH | 1 | 1 | | | | |
| 9 | 341–16321–20 | PLATE, FRICTION | 2 | 2 | | | | |
| 10 | 5JW–16321–10 | PLATE, FRICTION | 7 | 7 | | | | |
| 11 | 2H7–16325–00 | PLATE, CLUTCH 2 | 8 | 8 | | | | |
| 12 | 3D8–16350–00 | PRESSURE PLATE ASSY | 1 | 1 | | | | |
| 13 | 93306–00304 | .BEARING | 1 | 1 | | | | |
| 14 | 5S7–16334–00 | SPRING, CLUTCH 2 | 1 | 1 | | | | |
| 15 | 36Y–16335–00 | HOUSING, SPRING | 1 | 1 | | | | |
| 16 | 1TX–16352–00 | PLATE, PRESSURE 2 | 1 | 1 | | | | |
| 17 | 97002–06025 | BOLT | 6 | 6 | | | | |
| 18 | 4XV–16356–01 | ROD, PUSH 1 | 1 | 1 | | | | |
| 19 | 3D8–16164–10 | PLATE, THRUST 2 | 1 | 1 | | | | |
| 20 | 90387–26006 | COLLAR | 1 | 1 | | | | |
| 21 | 93310–33560 | BEARING | 1 | 1 | | | | |
| 22 | 90208–20001 | WASHER, CONICAL SPRING | 1 | 1 | | | | |
| 23 | 90179–20007 | NUT | 1 | 1 | | | | |
| 24 | 5S7–16340–00 | PUSH LEVER ASSY | 1 | 1 | | | | |
| 25 | 90508–18040 | SPRING, TORSION | 1 | 1 | | | | |
| 26 | 90201–10029 | WASHER, PLATE | 1 | 1 | | | | |
| 27 | 99009–10400 | CIRCLIP | 1 | 1 | | | | |

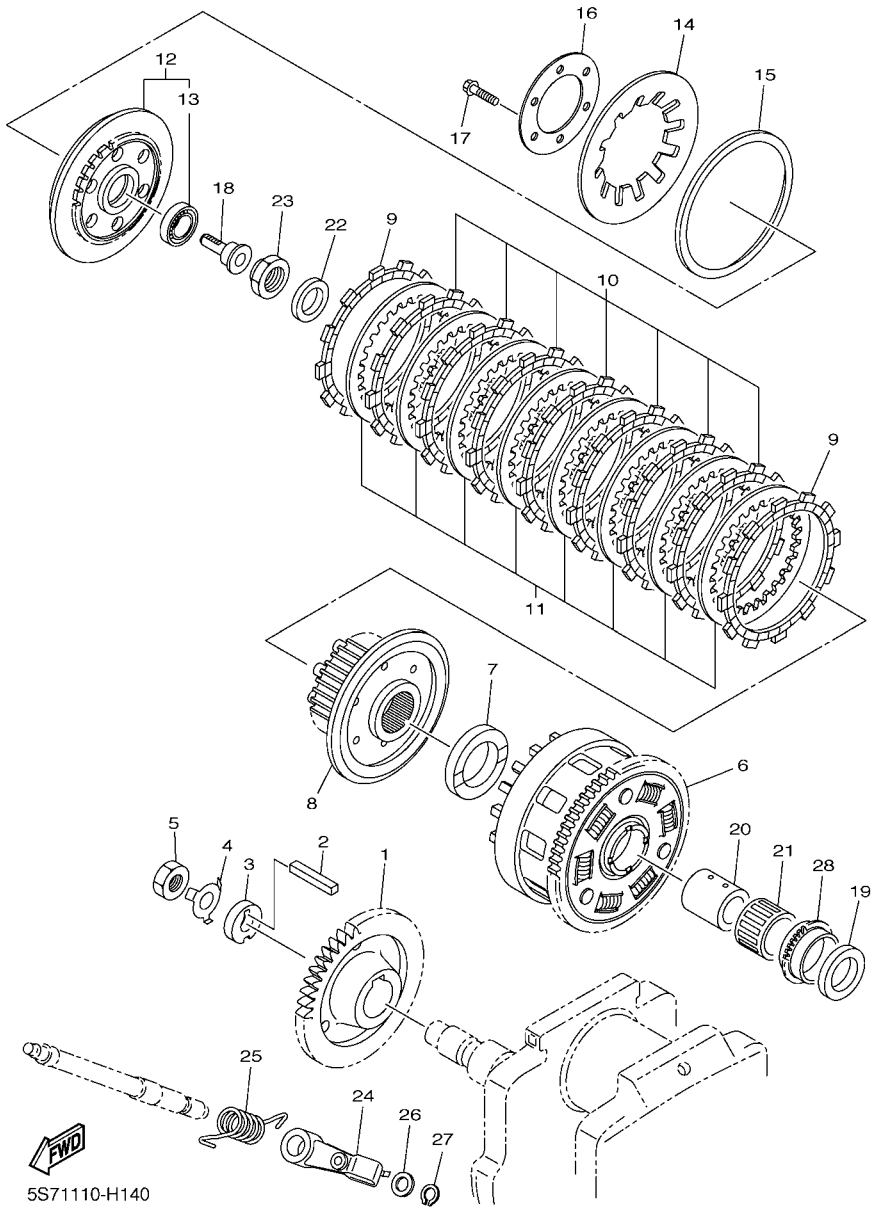


## FIG. 14 CLUTCH

| REF. NO. | PART NO. | DESCRIPTION | 5S71 | 5S72 | | | | REMARKS |
|---|---|---|---|---|---|---|---|---|
| 28 | 3D8–13354–10 | SPROCKET, DRIVE | 1 | 1 | | | | |

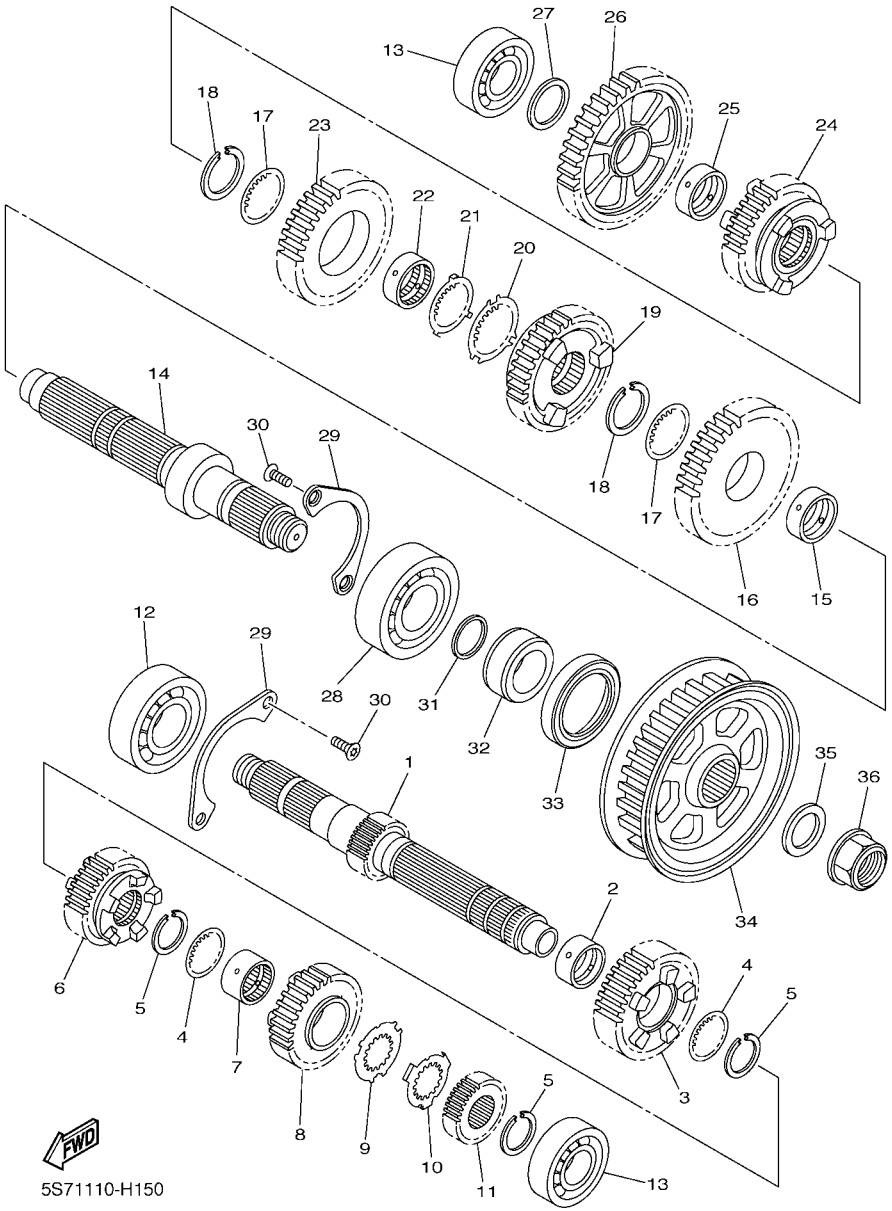


## FIG. 15 TRANSMISSION

| REF. NO. | PART NO. | DESCRIPTION | 5S71 | 5S72 | | | | REMARKS |
|---|---|---|---|---|---|---|---|---|
| 1 | 5S7–17411–00 | AXLE, MAIN (15T) | 1 | 1 | | | | |
| 2 | 90387–28003 | COLLAR | 1 | 1 | | | | |
| 3 | 5S7–17151–00 | GEAR, 5TH PINION (24T) | 1 | 1 | | | | |
| 4 | 90209–25011 | WASHER | 2 | 2 | | | | |
| 5 | 93440–28184 | CIRCLIP | 3 | 3 | | | | |
| 6 | 5S7–17131–00 | GEAR, 3RD PINION (19T) | 1 | 1 | | | | |
| 7 | 90387–25025 | COLLAR | 1 | 1 | | | | |
| 8 | 5S7–17141–00 | GEAR, 4TH PINION (27T) | 1 | 1 | | | | |
| 9 | 90214–25004 | WASHER, CLAW | 1 | 1 | | | | |
| 10 | 90214–25003 | WASHER, CLAW | 1 | 1 | | | | |
| 11 | 5S7–17121–00 | GEAR, 2ND PINION (16T) | 1 | 1 | | | | |
| 12 | 93306–37817 | BEARING | 1 | 1 | | | | |
| 13 | 93306–37213 | BEARING | 2 | 2 | | | | |
| 14 | 5S7–17421–00 | AXLE, DRIVE | 1 | 1 | | | | |
| 15 | 90387–31003 | COLLAR | 1 | 1 | | | | |
| 16 | 5S7–17221–00 | GEAR, 2ND WHEEL (33T) | 1 | 1 | | | | |
| 17 | 90209–28008 | WASHER | 2 | 2 | | | | |
| 18 | 93440–31187 | CIRCLIP | 2 | 2 | | | | |
| 19 | 5S7–17241–00 | GEAR, 4TH WHEEL (34T) | 1 | 1 | | | | |
| 20 | 90214–29002 | WASHER, CLAW | 1 | 1 | | | | |
| 21 | 90214–28002 | WASHER, CLAW | 1 | 1 | | | | |
| 22 | 90387–28004 | COLLAR | 1 | 1 | | | | |
| 23 | 5S7–17231–00 | GEAR, 3RD WHEEL (30T) | 1 | 1 | | | | |
| 24 | 5S7–17251–00 | GEAR, 5TH WHEEL (25T) | 1 | 1 | | | | |
| 25 | 90387–25008 | COLLAR | 1 | 1 | | | | |
| 26 | 5S7–17211–00 | GEAR, 1ST WHEEL (46T) | 1 | 1 | | | | |
| 27 | 90201–224L4 | WASHER, PLATE | 1 | 1 | | | | |

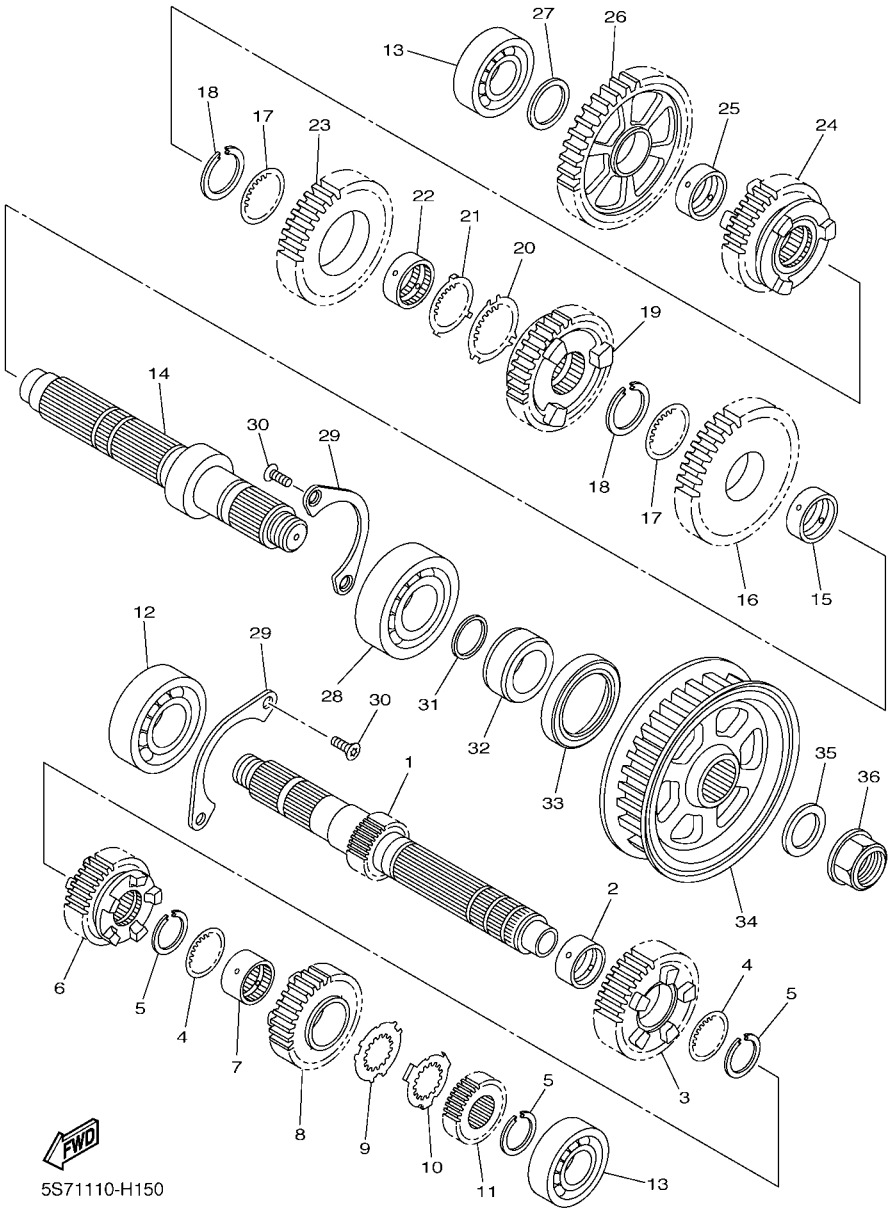


## FIG. 15 TRANSMISSION

| REF. NO. | PART NO. | DESCRIPTION | 5S71 | 5S72 | | | | REMARKS |
|---|---|---|---|---|---|---|---|---|
| 28 | 93306–30610 | BEARING | 1 | 1 | | | | |
| 29 | 3D8–15381–00 | PLATE, BEARING COVER | 2 | 2 | | | | |
| 30 | 90151–06024 | SCREW, COUNTERSUNK | 4 | 4 | | | | |
| 31 | 93210–27672 | O-RING | 1 | 1 | | | | |
| 32 | 90387–30010 | COLLAR | 1 | 1 | | | | |
| 33 | 93102–45012 | OIL SEAL | 1 | 1 | | | | |
| 34 | 5S7–17651–00 | PULLEY, BELT | 1 | 1 | | | | |
| 35 | 90208–22004 | WASHER, CONICAL SPRING | 1 | 1 | | | | |
| 36 | 90179–22028 | NUT | 1 | 1 | | | | |

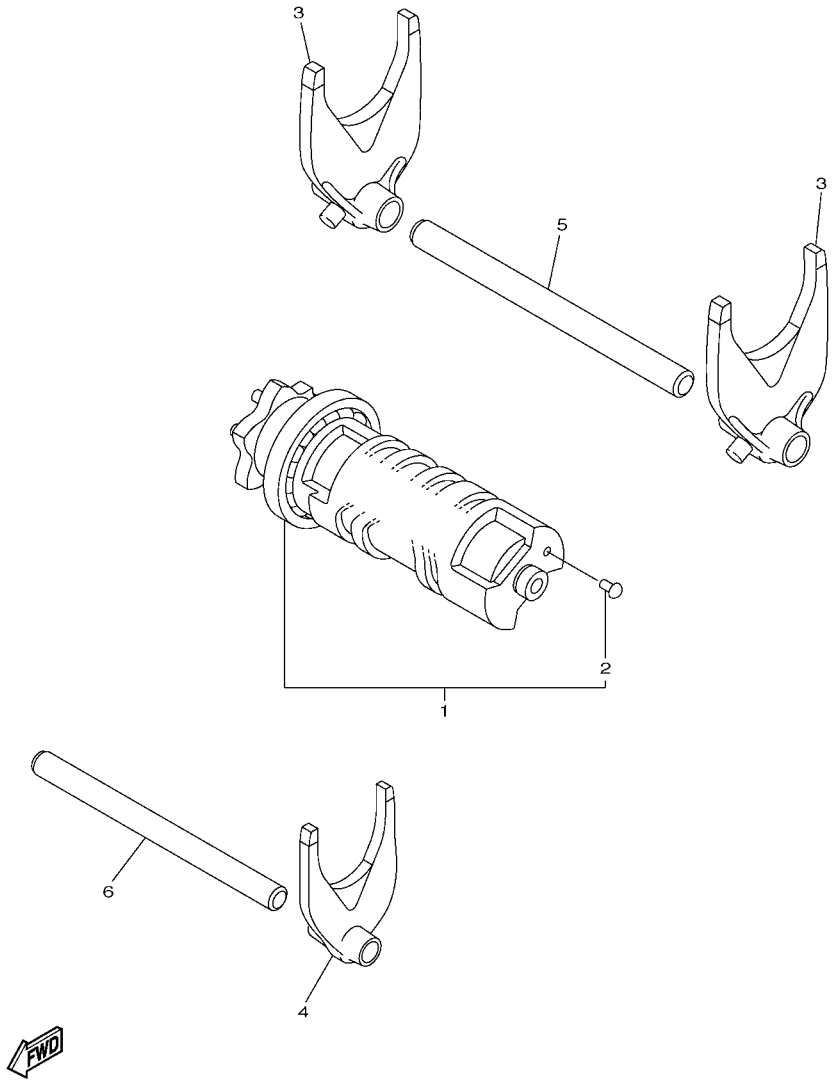


## FIG. 16 SHIFT CAM & FORK

| REF. NO. | PART NO. | DESCRIPTION | 5S71 | 5S72 | | | | REMARKS |
|---|---|---|---|---|---|---|---|---|
| 1 | 5S7–18540–00 | SHIFT CAM ASSY | 1 | 1 | | | | |
| 2 | 136–18542–00 | .POINT, NEUTRAL | 1 | 1 | | | | |
| 3 | 3D8–18511–00 | FORK, SHIFT 1 | 2 | 2 | | | | |
| 4 | 3D8–18512–00 | FORK, SHIFT 2 | 1 | 1 | | | | |
| 5 | 3D8–18531–00 | BAR, SHIFT FORK GUIDE 1 | 1 | 1 | | | | |
| 6 | 3D8–18535–00 | BAR, SHIFT FORK GUIDE 2 | 1 | 1 | | | | |

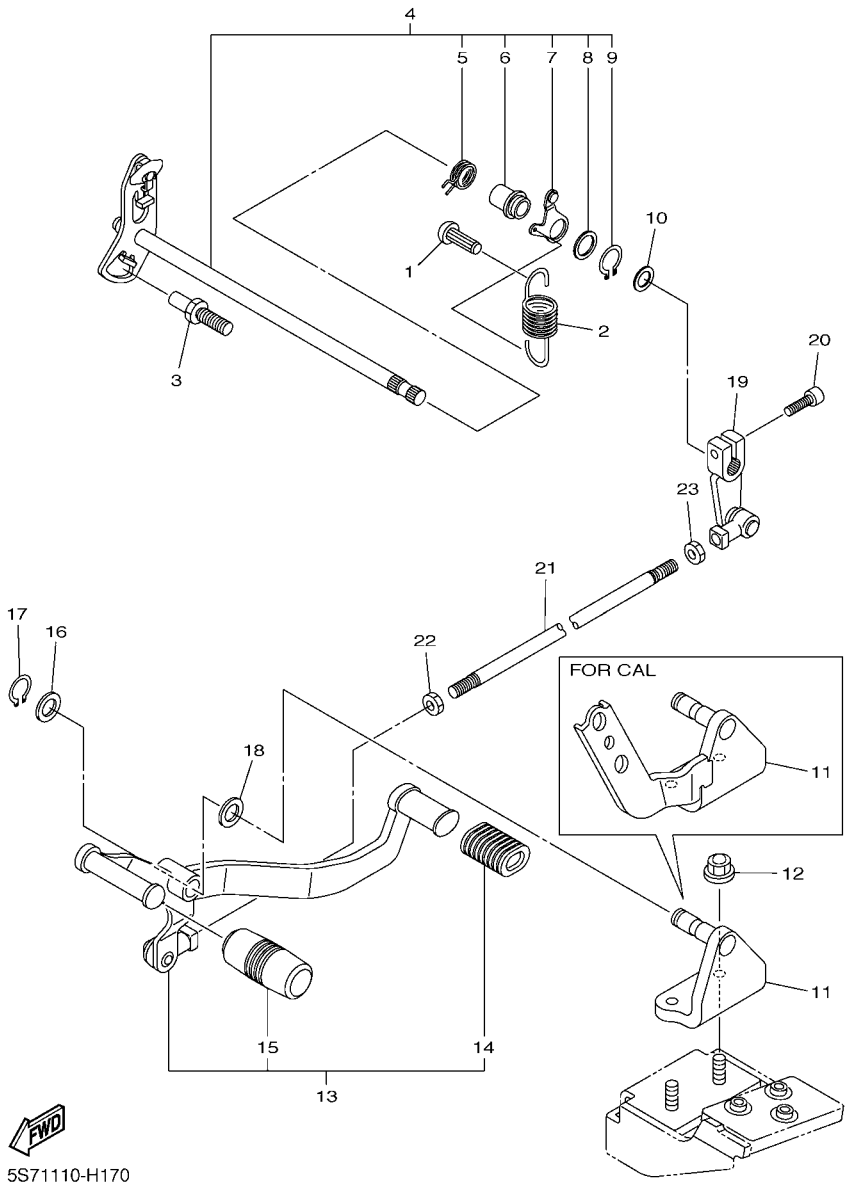


## FIG. 17 SHIFT SHAFT

| REF. NO. | PART NO. | DESCRIPTION | 5S71 | 5S72 | | | | REMARKS |
|---|---|---|---|---|---|---|---|---|
| 1 | 132–16346–00 | HOOK, SPRING | 1 | 1 | | | | |
| 2 | 90506–18015 | SPRING, TENSION | 1 | 1 | | | | |
| 3 | 1D7–18127–00 | STOPPER, SCREW | 1 | 1 | | | | |
| 4 | 3D8–18101–00 | SHIFT SHAFT ASSY | 1 | 1 | | | | |
| 5 | 90508–32040 | .SPRING, TORSION | 1 | 1 | | | | |
| 6 | 3D8–18175–00 | .SPACER | 1 | 1 | | | | |
| 7 | 3D8–18140–00 | .STOPPER LEVER ASSY | 1 | 1 | | | | |
| 8 | 90201–177G4 | .WASHER, PLATE | 1 | 1 | | | | |
| 9 | 99009–17400 | .CIRCLIP | 1 | 1 | | | | |
| 10 | 90201–127E1 | WASHER, PLATE | 1 | 1 | | | | |
| 11 | 5S7–27443–00 | BRACKET 3 | 1 | | | | | |
| | 5S7–27443–10 | BRACKET 3 | | 1 | | | | FOR CALIFORNIA |
| 12 | 90176–08009 | NUT, CROWN | 2 | 2 | | | | |
| 13 | 5S7–18110–00 | SHIFT PEDAL ASSY | 1 | 1 | | | | |
| 14 | 22N–18113–00 | .COVER, SHIFT PEDAL | 1 | 1 | | | | |
| 15 | 5VN–18113–00 | .COVER, SHIFT PEDAL | 1 | 1 | | | | |
| 16 | 90201–12688 | WASHER, PLATE | 1 | 1 | | | | |
| 17 | 99009–12400 | CIRCLIP | 1 | 1 | | | | |
| 18 | 90201–12049 | WASHER, PLATE | 1 | 1 | | | | |
| 19 | 3D8–18112–01 | ARM, SHIFT | 1 | 1 | | | | |
| 20 | 91312–06020 | BOLT | 1 | 1 | | | | |
| 21 | 2D1–18115–00 | ROD, SHIFT | 1 | 1 | | | | |
| 22 | 90170–06024 | NUT | 1 | 1 | | | | |
| 23 | 95314–06600 | NUT | 1 | 1 | | | | |

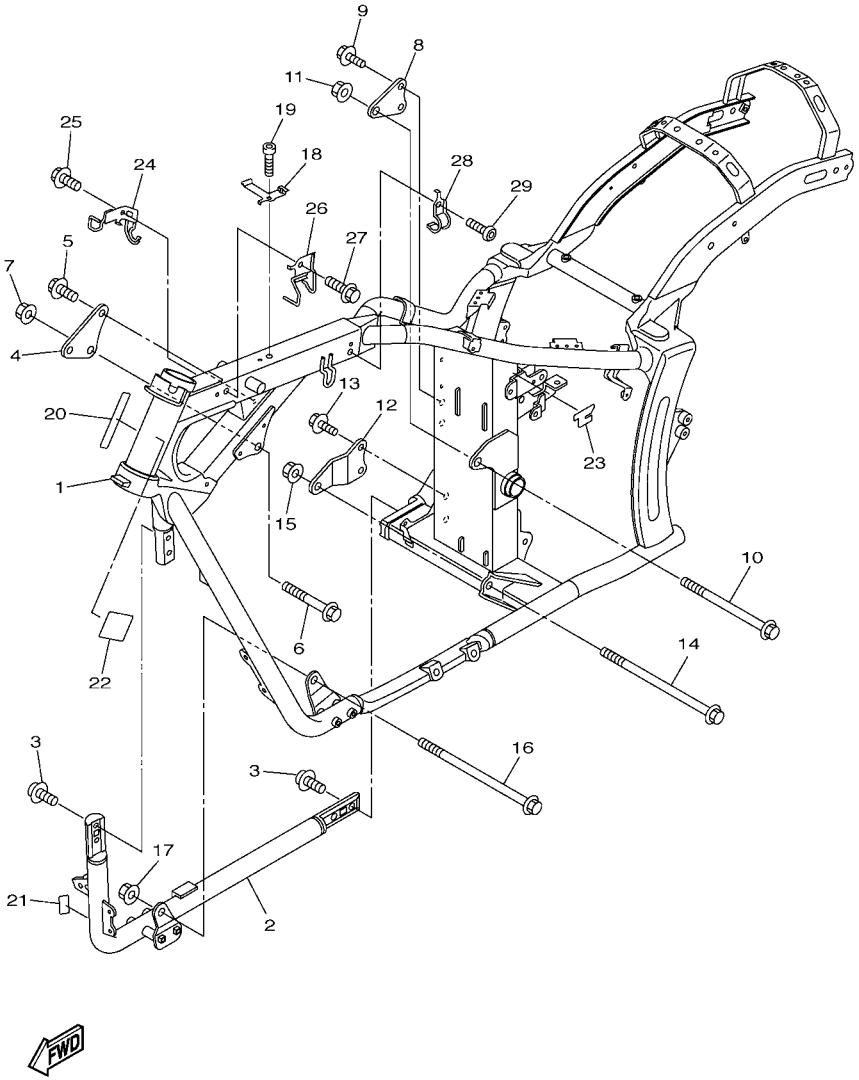


5S71110-H180

## FIG. 18 FRAME

| REF. NO. | PART NO. | DESCRIPTION | 5S71 | 5S72 | | | | REMARKS |
|---|---|---|---|---|---|---|---|---|
| 1 | 5S7–21110–01 | FRAME COMP. | 1 | 1 | | | | *1 |
| | 5S7–21110–02 | FRAME COMP. | 1 | 1 | | | | *2 |
| 2 | 5S7–21280–00 | DOWNTUBE COMP. | 1 | 1 | | | | |
| 3 | 90110–10016 | BOLT, HEXAGON SOCKET HEAD | 4 | 4 | | | | |
| 4 | 5S7–21317–00 | STAY, ENGINE 3 | 1 | 1 | | | | |
| 5 | 90105–10236 | BOLT, FLANGE | 2 | 2 | | | | |
| 6 | 90105–12252 | BOLT, FLANGE | 1 | 1 | | | | |
| 7 | 90185–12002 | NUT, SELF-LOCKING | 1 | 1 | | | | |
| 8 | 5S7–21314–00 | STAY, ENGINE 5 | 1 | 1 | | | | |
| 9 | 90105–10236 | BOLT, FLANGE | 2 | 2 | | | | |
| 10 | 90105–12043 | BOLT, FLANGE | 1 | 1 | | | | |
| 11 | 90185–12002 | NUT, SELF-LOCKING | 1 | 1 | | | | |
| 12 | 5S7–21316–00 | STAY, ENGINE 3 | 1 | 1 | | | | |
| 13 | 90105–10236 | BOLT, FLANGE | 2 | 2 | | | | |
| 14 | 90105–12044 | BOLT, FLANGE | 1 | 1 | | | | |
| 15 | 90185–12002 | NUT, SELF-LOCKING | 1 | 1 | | | | |
| 16 | 90105–12069 | BOLT, FLANGE | 1 | 1 | | | | |
| 17 | 90185–12002 | NUT, SELF-LOCKING | 1 | 1 | | | | |
| 18 | 5S7–21158–00 | BRACKET | 1 | 1 | | | | |
| 19 | 91312–06020 | BOLT | 1 | 1 | | | | |
| 20 | 3D8–2117G–00 | PROTECTOR | 1 | 1 | | | | |
| 21 | 5PX–21268–00 | SEAL | 1 | 1 | | | | |
| 22 | 1D7–2639G–00 | SEAL | 1 | 1 | | | | |
| 23 | 5S7–21732–00 | SEAL 1 | 1 | 1 | | | | |
| 24 | 5S7–26279–00 | GUIDE, CABLE | 1 | 1 | | | | |
| 25 | 95027–06016 | BOLT, FLANGE | 1 | 1 | | | | |
| 26 | 5S7–26475–00 | HOLDER | 1 | 1 | | | | |
| 27 | 95027–06016 | BOLT, FLANGE | 1 | 1 | | | | |

*1 5S71:To VN01E-001786 5S72:To VN01Y-000161
*2 5S71:From VN01E-001787 5S72:From VN01Y-000162

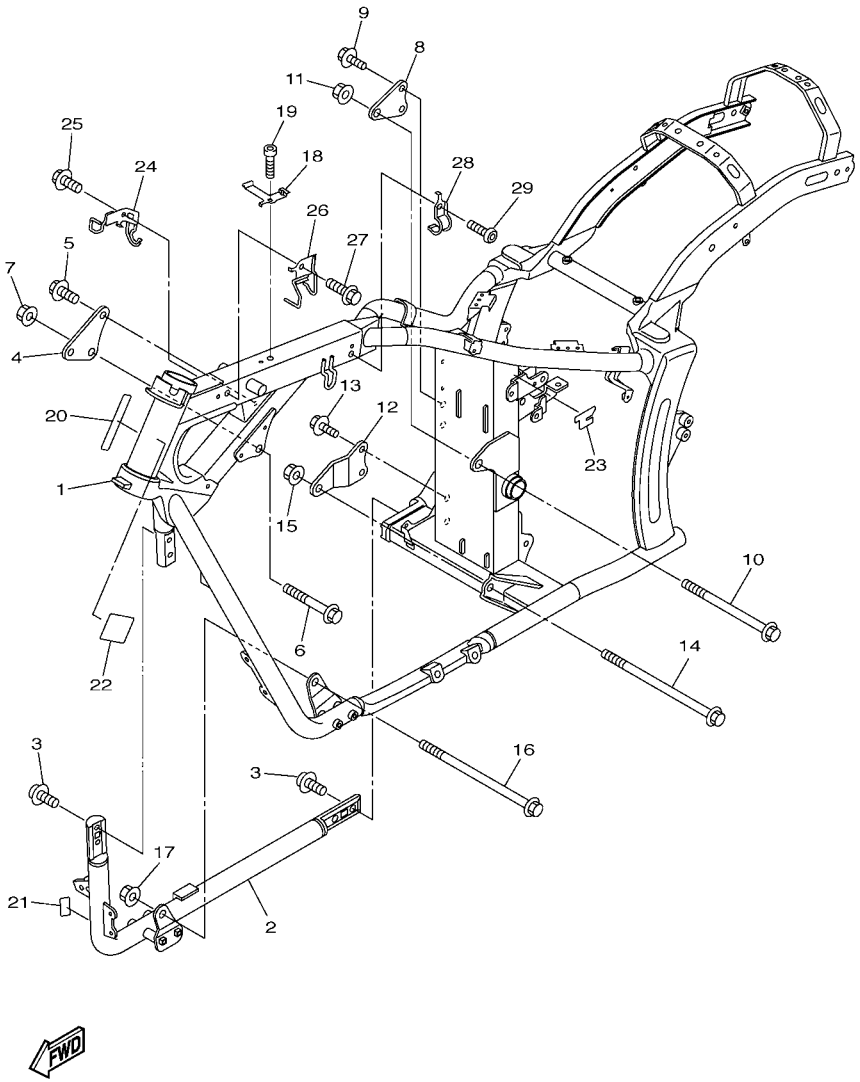


5S71110-H180

## FIG. 18 FRAME

| REF. NO. | PART NO. | DESCRIPTION | 5S71 | 5S72 | | | | REMARKS |
|---|---|---|---|---|---|---|---|---|
| 28 | 90462–16005 | CLAMP | 1 | 1 | | | | |
| 29 | 92012–06016 | BOLT, BUTTON HEAD | 1 | 1 | | | | |

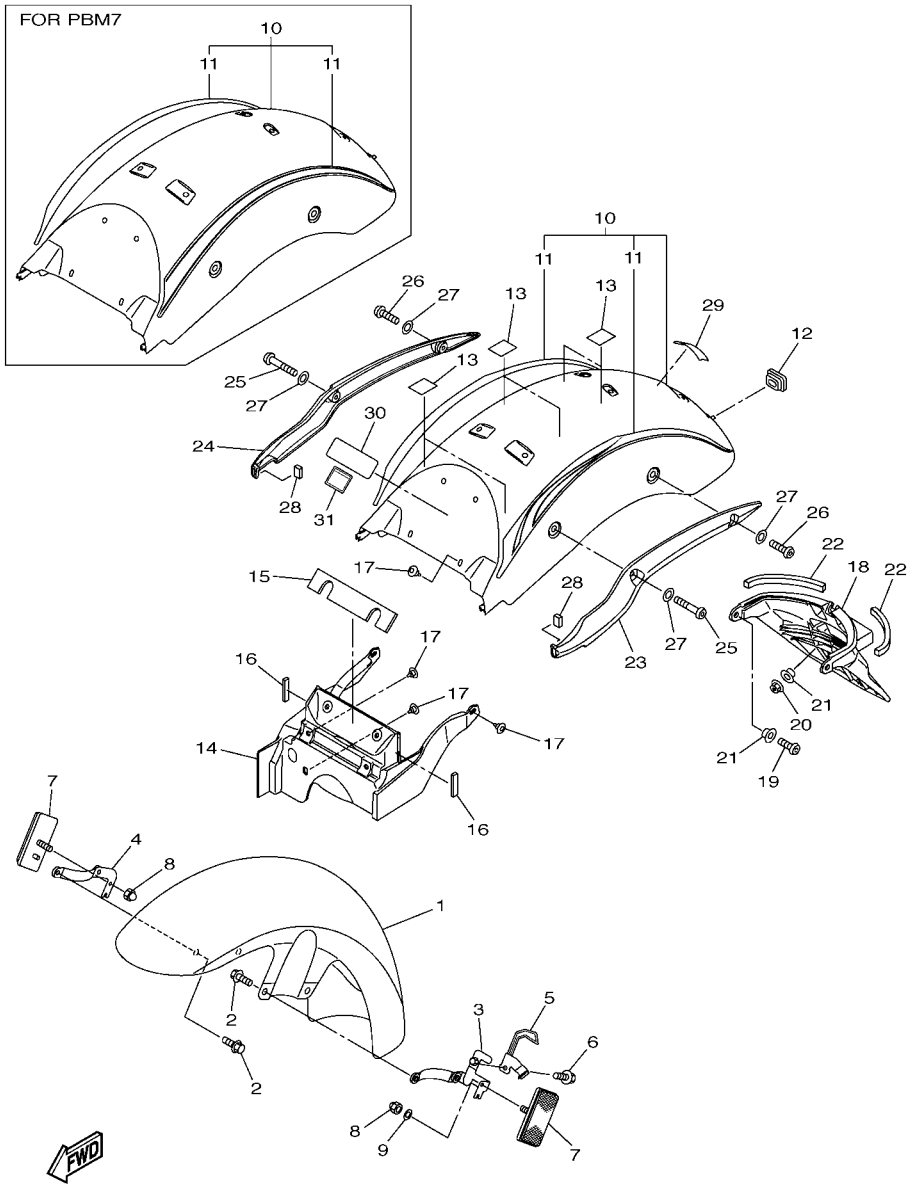


## FIG. 19 FENDER

| REF. NO. | PART NO. | DESCRIPTION | 5S71 | 5S72 | | | | REMARKS |
|---|---|---|---|---|---|---|---|---|
| 1 | 5S7–21510–00–P1 | FRONT FENDER COMP. | 1 | 1 | | | | UR FOR DRMK |
| | 5S7–21510–00–P2 | FRONT FENDER COMP. | 1 | 1 | | | | UR FOR PBM7 |
| 2 | 95812–08020 | BOLT, FLANGE | 4 | 4 | | | | |
| 3 | 5S7–21587–00 | STAY 1 | 1 | 1 | | | | |
| 4 | 5S7–21588–00 | STAY 2 | 1 | 1 | | | | |
| 5 | 3D8–21597–00 | HOLDER,WIRE 1 | 1 | 1 | | | | |
| 6 | 95027–06010 | BOLT, FLANGE | 1 | 1 | | | | |
| 7 | 11H–85110–01 | REFLECTOR ASSY | 2 | 2 | | | | |
| 8 | 90176–05004 | NUT, CROWN | 2 | 2 | | | | |
| 9 | 90201–051K1 | WASHER, PLATE | 1 | 1 | | | | |
| 10 | 5S7–Y2161–00–P1 | REAR FENDER COMP. | 1 | 1 | | | | UR FOR DRMK |
| | 5S7–Y2161–10–P2 | REAR FENDER COMP. | 1 | 1 | | | | UR FOR PBM7 |
| 11 | 5S7–2165A–00 | .GRAPHIC SET,REAR FENDER | 1 | 1 | | | | UR FOR DRMK |
| | 5S7–2165A–10 | .GRAPHIC SET,REAR FENDER | 1 | 1 | | | | UR FOR PBM7 |
| 12 | 90480–13027 | GROMMET | 1 | 1 | | | | |
| 13 | 5PX–21669–01 | SEAL | 6 | 6 | | | | |
| 14 | 5S7–21629–00–P1 | GUARD, MUD | 1 | 1 | | | | UR FOR DRMK |
| | 5S7–21629–00–P2 | GUARD, MUD | 1 | 1 | | | | UR FOR PBM7 |
| 15 | 5S7–21638–00 | DAMPER 1 | 1 | 1 | | | | |
| 16 | 5S7–21639–00 | DAMPER 2 | 2 | 2 | | | | |
| 17 | 90269–07077 | RIVET | 7 | 7 | | | | |
| 18 | 5S7–2162R–00 | FENDER 2 | 1 | 1 | | | | |
| 19 | 92012–06012 | BOLT, BUTTON HEAD | 2 | 2 | | | | |
| 20 | 95602–06200 | NUT, SELF-LOCKING | 2 | 2 | | | | |
| 21 | 90387–07717 | COLLAR | 4 | 4 | | | | |
| 22 | 4DN–21669–00 | SEAL | 2 | 2 | | | | |
| 23 | 5S7–2164F–00 | STAY 1 | 1 | 1 | | | | |

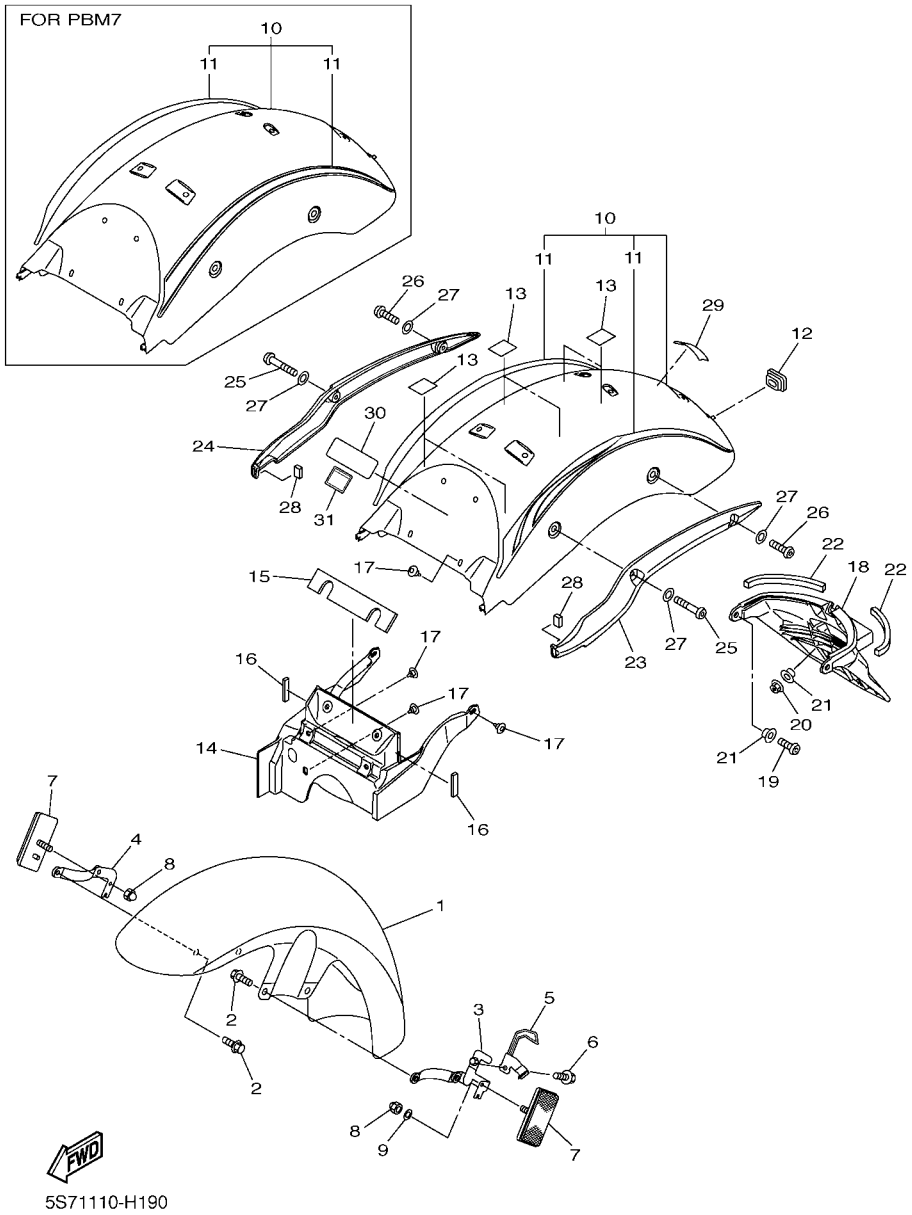


## FIG. 19 FENDER

| REF. NO. | PART NO. | DESCRIPTION | 5S71 | 5S72 | | | | REMARKS |
|---|---|---|---|---|---|---|---|---|
| 24 | 5S7–2164G–00 | STAY 2 | 1 | 1 | | | | |
| 25 | 92014–08045 | BOLT, BUTTON HEAD | 2 | 2 | | | | |
| 26 | 92014–08030 | BOLT, BUTTON HEAD | 2 | 2 | | | | |
| 27 | 92990–08200 | WASHER, PLAIN | 4 | 4 | | | | |
| 28 | 3MA–24181–00 | DAMPER, LOCATING 1 | 2 | 2 | | | | |
| 29 | 1D6–2153E–00 | EMBLEM, YAMAHA | 1 | 1 | | | | |
| 30 | 5S7–2179W–00 | PLATE, EPA (NON CALIFORNIA) | 1 | | | | | |
| | 5S7–2176P–00 | PLATE, EPA (CALIFORNIA) | | 1 | | | | FOR CALIFORNIA |
| 31 | 5PX–21686–00 | PLATE, ROUTING 2 | | 1 | | | | FOR CALIFORNIA |

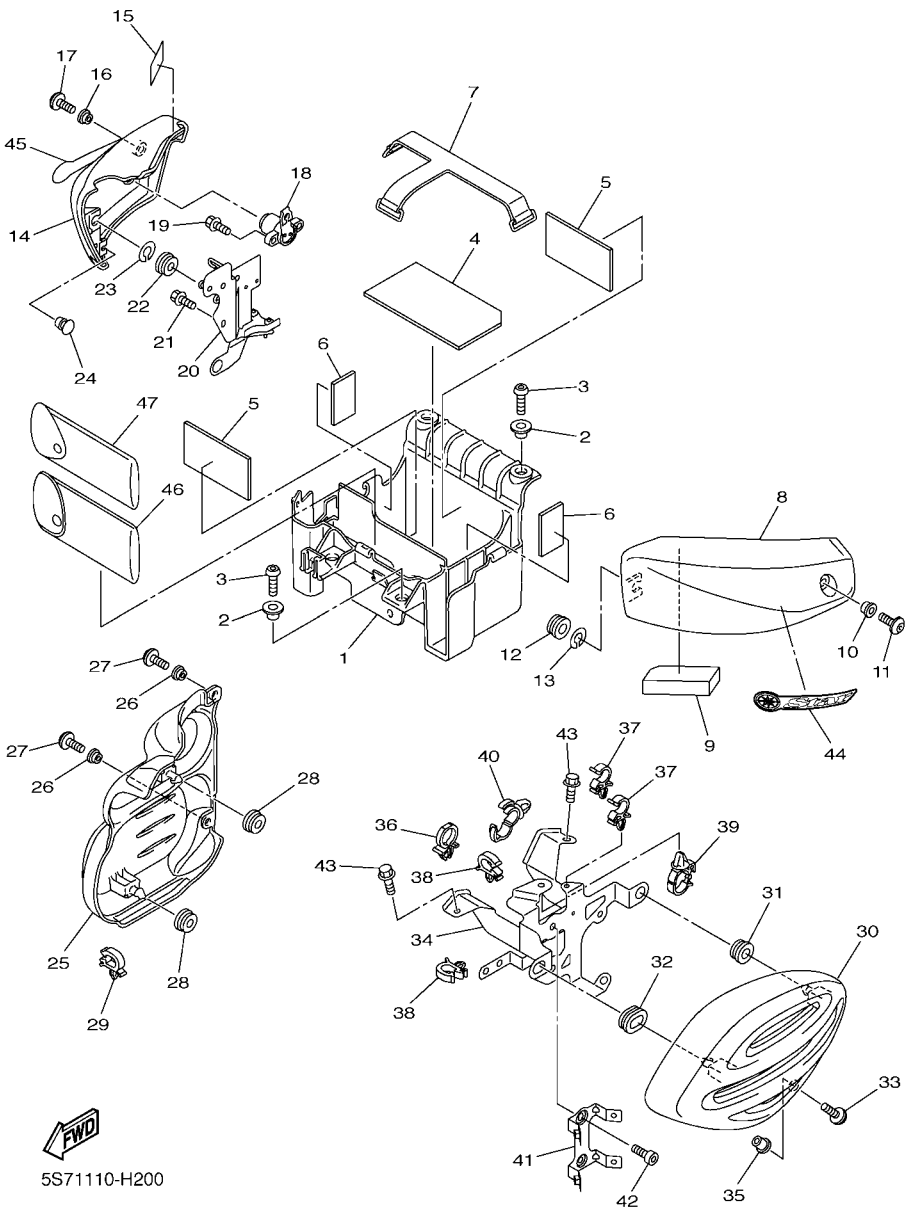


## FIG. 20 SIDE COVER

| REF. NO. | PART NO. | DESCRIPTION | 5S71 | 5S72 | | | | REMARKS |
|---|---|---|---|---|---|---|---|---|
| 1 | 5S7–2177G–00 | BOX, BATTERY | 1 | 1 | | | | |
| 2 | 90387–06109 | COLLAR | 4 | 4 | | | | |
| 3 | 92012–06020 | BOLT, BUTTON HEAD | 4 | 4 | | | | |
| 4 | 51Y–82122–00 | SEAT, BATTERY | 1 | 1 | | | | |
| 5 | 5EJ–2414H–00 | DAMPER, PLATE 1 | 2 | 2 | | | | |
| 6 | 22F–2139X–00 | DAMPER | 2 | 2 | | | | |
| 7 | 5S7–82131–00 | BAND, BATTERY | 1 | 1 | | | | |
| 8 | 5S7–21711–00–P1 | COVER, SIDE 1 | 1 | 1 | | | | UR FOR DRMK |
| | 5S7–21711–00–P2 | COVER, SIDE 1 | 1 | 1 | | | | UR FOR PBM7 |
| 9 | 5S7–21852–00 | DAMPER | 1 | 1 | | | | |
| 10 | 90387–06173 | COLLAR | 1 | 1 | | | | |
| 11 | 90111–06038 | BOLT,HEX. SOCKET BUTTON | 1 | 1 | | | | |
| 12 | 90480–12550 | GROMMET | 1 | 1 | | | | |
| 13 | 5S7–21715–00 | WASHER, SPECIAL 1 | 1 | 1 | | | | |
| 14 | 5S7–21721–00–P1 | COVER, SIDE 2 | 1 | 1 | | | | UR FOR DRMK |
| | 5S7–21721–00–P2 | COVER, SIDE 2 | 1 | 1 | | | | UR FOR PBM7 |
| 15 | 19D–21732–00 | SEAL 1 | 1 | 1 | | | | |
| 16 | 90387–06173 | COLLAR | 1 | 1 | | | | |
| 17 | 90149–06023 | SCREW | 1 | 1 | | | | |
| 18 | 5PX–W2470–00 | ROTOR SET | 1 | 1 | | | | |
| 19 | 90105–06639 | BOLT, FLANGE | 2 | 2 | | | | |
| 20 | 5S7–2172N–00 | BRACKET 4 | 1 | 1 | | | | |
| 21 | 90105–06639 | BOLT, FLANGE | 2 | 2 | | | | |
| 22 | 90480–12550 | GROMMET | 1 | 1 | | | | |
| 23 | 5S7–21715–00 | WASHER, SPECIAL 1 | 1 | 1 | | | | |
| 24 | 90338–06018 | PLUG | 1 | 1 | | | | |
| 25 | 5S7–21741–00 | COVER, SIDE 4 | 1 | 1 | | | | |

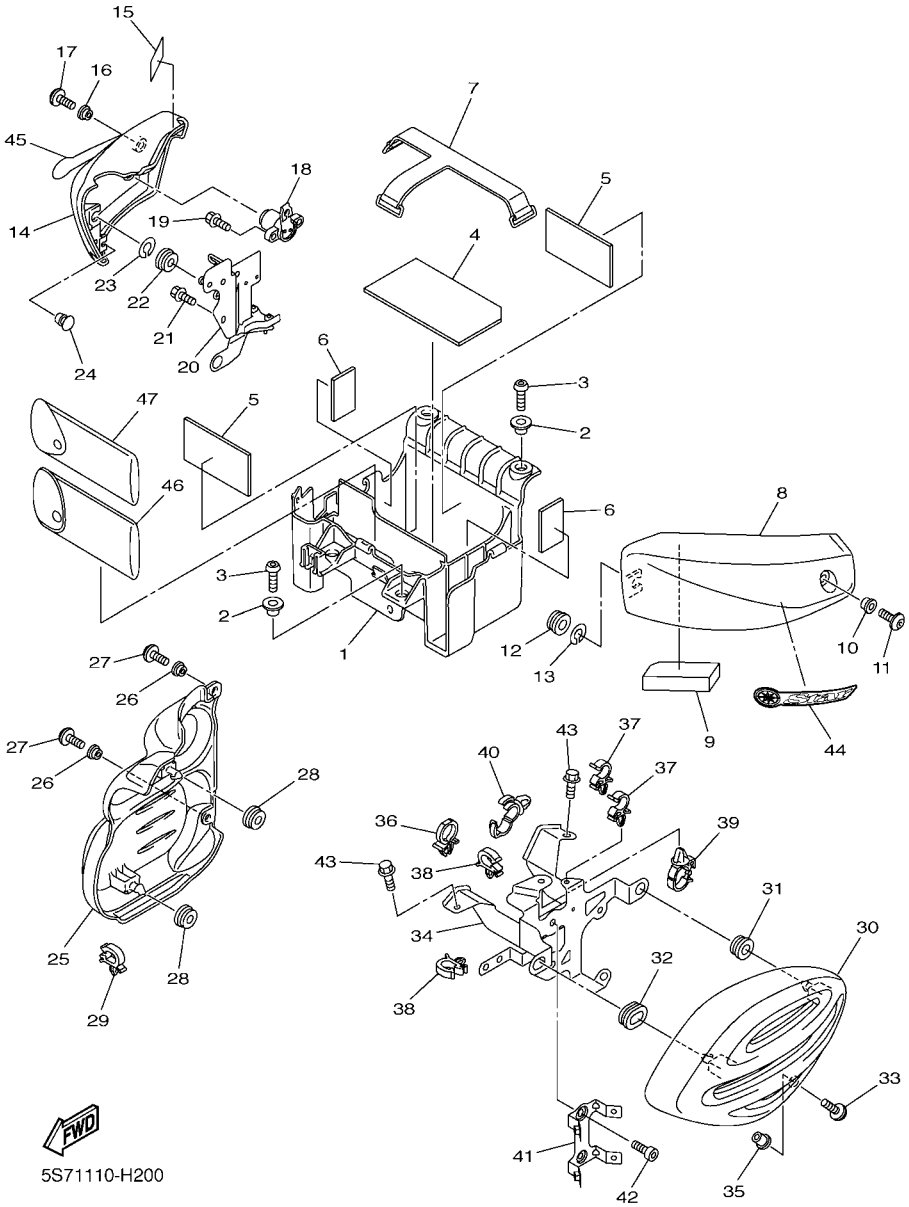


## FIG. 20 SIDE COVER

| REF. NO. | PART NO. | DESCRIPTION | 5S71 | 5S72 | | | | REMARKS |
|---|---|---|---|---|---|---|---|---|
| 26 | 90387–06231 | COLLAR | 2 | 2 | | | | |
| 27 | 90111–06038 | BOLT,HEX. SOCKET BUTTON | 2 | 2 | | | | |
| 28 | 90480–13426 | GROMMET | 2 | 2 | | | | |
| 29 | 90464–11003 | CLAMP | 1 | 1 | | | | |
| 30 | 5S7–21731–10 | COVER, SIDE 3 | 1 | 1 | | | | |
| 31 | 90480–13567 | GROMMET | 1 | 1 | | | | |
| 32 | 90480–01558 | GROMMET | 1 | 1 | | | | |
| 33 | 90149–05299 | SCREW | 1 | 1 | | | | |
| 34 | 5S7–2175V–00 | BRACKET 3 | 1 | 1 | | | | |
| 35 | 90179–05003 | NUT | 1 | 1 | | | | |
| 36 | 90464–12001 | CLAMP | 1 | 1 | | | | |
| 37 | 90464–09129 | CLAMP | 2 | 2 | | | | |
| 38 | 90464–11003 | CLAMP | 2 | 2 | | | | |
| 39 | 90464–20010 | CLAMP | 1 | 1 | | | | |
| 40 | 90464–20181 | CLAMP | 1 | 1 | | | | |
| 41 | 3D8–21359–00 | BRACKET, COIL | 1 | 1 | | | | |
| 42 | 91312–06010 | BOLT | 2 | 2 | | | | |
| 43 | 95024–08016 | BOLT, FLANGE | 2 | 2 | | | | |
| 44 | 5S7–21781–00 | EMBLEM 1 | 1 | 1 | | | | |
| 45 | 5S7–21782–00 | EMBLEM 2 | 1 | 1 | | | | |
| 46 | 3D8–28100–00 | TOOL KIT | 1 | 1 | | | | |
| 47 | 5S7–28110–00 | TOOL KIT, 2 | 1 | 1 | | | | |

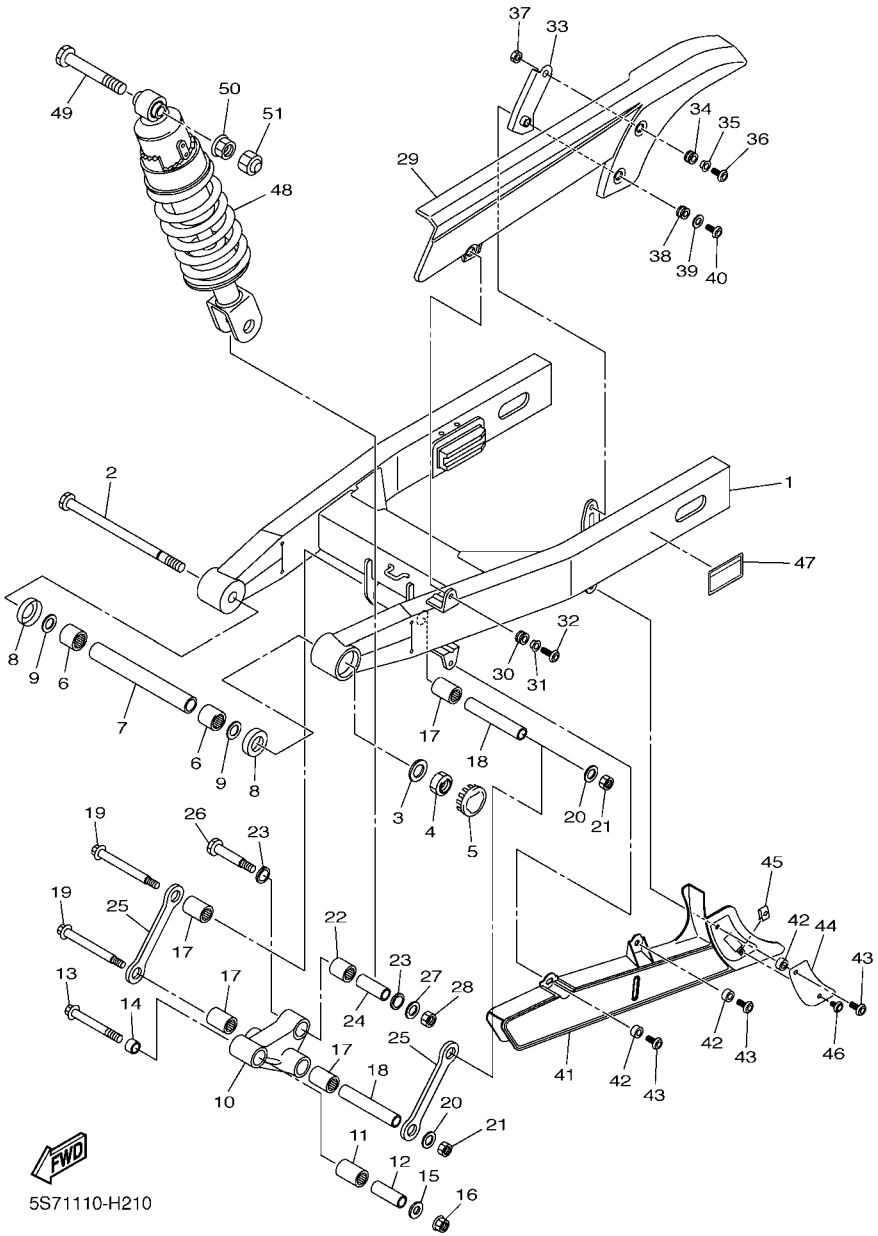


## FIG. 21 REAR ARM & SUSPENSION

| REF. NO. | PART NO. | DESCRIPTION | 5S71 | 5S72 | | | | REMARKS |
|---|---|---|---|---|---|---|---|---|
| 1 | 5S7–22110–00 | REAR ARM COMP. | 1 | 1 | | | | |
| 2 | 3D8–22141–01 | SHAFT, PIVOT | 1 | 1 | | | | |
| 3 | 90201–16018 | WASHER, PLATE | 1 | 1 | | | | |
| 4 | 90185–16002 | NUT, SELF-LOCKING | 1 | 1 | | | | |
| 5 | 4KM–2219X–00 | COVER | 1 | 1 | | | | |
| 6 | 93320–32403 | BEARING | 2 | 2 | | | | |
| 7 | 3D8–22124–00 | BUSH 2 | 1 | 1 | | | | |
| 8 | 5EL–22129–00 | COVER, THRUST 2 | 2 | 2 | | | | |
| 9 | 90201–243U9 | WASHER, PLATE | 2 | 2 | | | | |
| 10 | 3D8–2217A–00 | ARM, RELAY | 1 | 1 | | | | |
| 11 | 93317–42060 | BEARING | 1 | 1 | | | | |
| 12 | 90387–100T8 | COLLAR | 1 | 1 | | | | |
| 13 | 90105–10233 | BOLT, FLANGE | 1 | 1 | | | | |
| 14 | 90387–10049 | COLLAR | 1 | 1 | | | | |
| 15 | 90201–101J1 | WASHER, PLATE | 1 | 1 | | | | |
| 16 | 95602–10200 | NUT, U FLANGE | 1 | 1 | | | | |
| 17 | 93317–41761 | BEARING | 4 | 4 | | | | |
| 18 | 90387–126T1 | COLLAR | 2 | 2 | | | | |
| 19 | 90101–12027 | BOLT | 2 | 2 | | | | |
| 20 | 90201–12045 | WASHER, PLATE | 2 | 2 | | | | |
| 21 | 95612–12100 | NUT, U | 2 | 2 | | | | |
| 22 | 93317–31771 | BEARING | 1 | 1 | | | | |
| 23 | 93109–17071 | OIL SEAL | 2 | 2 | | | | |
| 24 | 90387–127W0 | COLLAR | 1 | 1 | | | | |
| 25 | 3D8–2217M–00 | ARM 1 | 2 | 2 | | | | |
| 26 | 90109–10024 | BOLT | 1 | 1 | | | | |
| 27 | 90201–10035 | WASHER, PLATE | 1 | 1 | | | | |

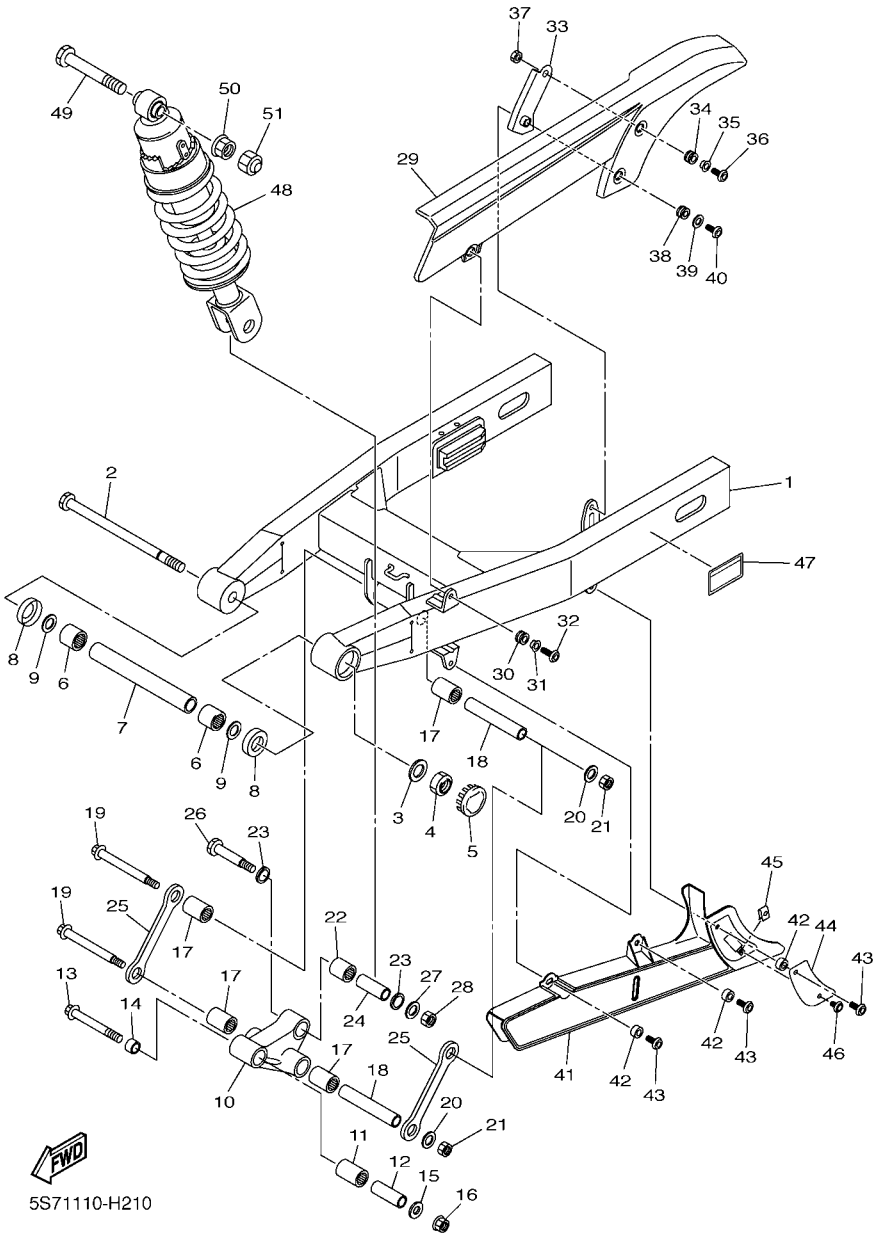


## FIG. 21 REAR ARM & SUSPENSION

| REF. NO. | PART NO. | DESCRIPTION | 5S71 | 5S72 | | | | REMARKS |
|---|---|---|---|---|---|---|---|---|
| 28 | 95612–10100 | NUT, U | 1 | 1 | | | | |
| 29 | 5S7–22311–00 | CASE, CHAIN | 1 | 1 | | | | |
| 30 | 90480–13004 | GROMMET | 1 | 1 | | | | |
| 31 | 90387–06171 | COLLAR | 1 | 1 | | | | |
| 32 | 90149–06302 | SCREW | 1 | 1 | | | | |
| 33 | 3D8–2213J–00 | STAY, CHAIN CASE | 1 | 1 | | | | |
| 34 | 90480–13004 | GROMMET | 1 | 1 | | | | |
| 35 | 90387–06171 | COLLAR | 1 | 1 | | | | |
| 36 | 90111–06038 | BOLT,HEX. SOCKET BUTTON | 1 | 1 | | | | |
| 37 | 95302–06600 | NUT | 1 | 1 | | | | |
| 38 | 90480–13004 | GROMMET | 1 | 1 | | | | |
| 39 | 90201–06095 | WASHER, PLATE | 1 | 1 | | | | |
| 40 | 90149–06302 | SCREW | 1 | 1 | | | | |
| 41 | 3D8–22312–00 | CASE, CHAIN 2 | 1 | 1 | | | | |
| 42 | 90387–06372 | COLLAR | 3 | 3 | | | | |
| 43 | 90149–06302 | SCREW | 3 | 3 | | | | |
| 44 | 5S7–22341–00 | PLATE, GUIDE 1 | 1 | 1 | | | | |
| 45 | 90183–06053 | NUT, SPRING | 1 | 1 | | | | |
| 46 | 90111–06078 | BOLT,HEX. SOCKET BUTTON | 1 | 1 | | | | |
| 47 | 5S7–21668–00 | LABEL, TIRE | 1 | 1 | | | | |
| 48 | 5S7–22210–00 | SHOCK ABSORBER ASSY, REAR | 1 | 1 | | | | |
| 49 | 90109–10028 | BOLT | 1 | 1 | | | | |
| 50 | 95602–10200 | NUT, U FLANGE | 1 | 1 | | | | |
| 51 | 5YU–2143A–00 | CAP | 1 | 1 | | | | |

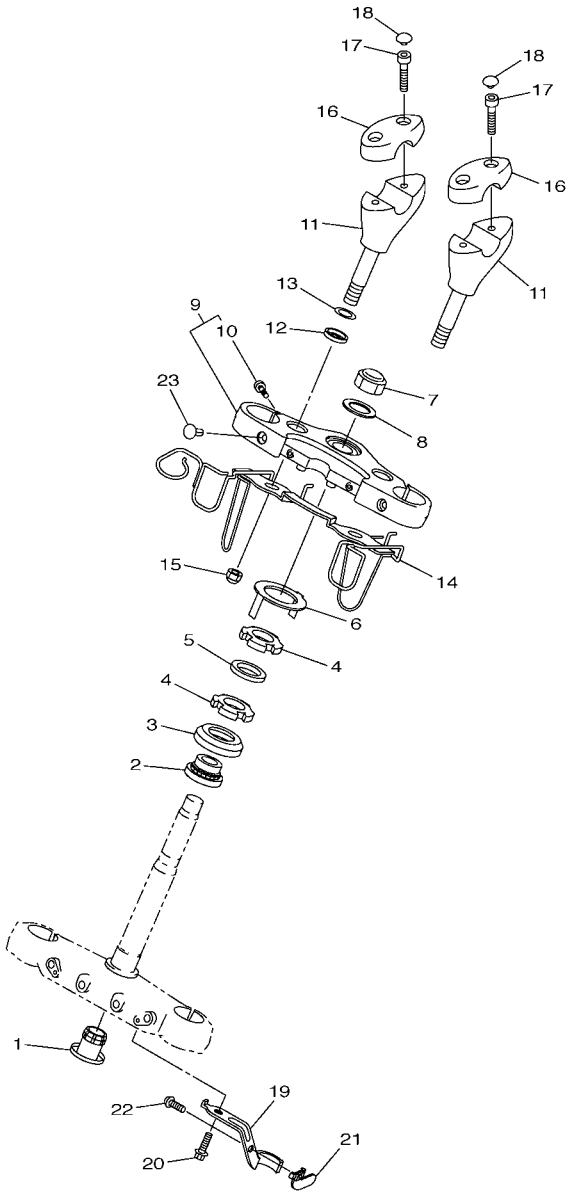


5S71110-H220

## FIG. 22 STEERING

| REF. NO. | PART NO. | DESCRIPTION | 5S71 | 5S72 | | | | REMARKS |
|---|---|---|---|---|---|---|---|---|
| 1 | 4KM–23123–01 | COVER, UNDER 1 | 1 | 1 | | | | |
| 2 | 93399–99931 | BEARING | 1 | 1 | | | | |
| 3 | 1W1–23416–00 | COVER, BALL RACE 2 | 1 | 1 | | | | |
| 4 | 90179–25033 | NUT | 2 | 2 | | | | |
| 5 | 90202–26142 | WASHER, PLATE | 1 | 1 | | | | |
| 6 | 26H–23418–01 | WASHER, SPECIAL | 1 | 1 | | | | |
| 7 | 90176–22081 | NUT, CROWN | 1 | 1 | | | | |
| 8 | 90201–220T0 | WASHER, PLATE | 1 | 1 | | | | |
| 9 | 3D8–Y2343–00 | CROWN, HANDLE | 1 | 1 | | | | |
| 10 | 91314–08030 | .BOLT, HEXAGON SOCKET HEAD | 2 | 2 | | | | |
| 11 | 5PX–23442–00 | HOLDER, HANDLE LOWER | 2 | 2 | | | | |
| 12 | 3DM–23445–00 | DAMPER | 2 | 2 | | | | |
| 13 | 90201–14220 | WASHER, PLATE | 2 | 2 | | | | |
| 14 | 5S7–23389–00 | GUIDE, CABLE | 1 | 1 | | | | |
| 15 | 90176–12052 | NUT, CROWN | 2 | 2 | | | | |
| 16 | 4NK–23441–00 | HOLDER, HANDLE UPPER | 2 | 2 | | | | |
| 17 | 91314–08025 | BOLT, HEXAGON SOCKET HEAD | 4 | 4 | | | | |
| 18 | 90338–08163 | PLUG | 4 | 4 | | | | |
| 19 | 3D8–25886–00 | HOLDER, BRAKE HOSE | 1 | 1 | | | | |
| 20 | 90105–06135 | BOLT, FLANGE | 1 | 1 | | | | |
| 21 | 3D8–25887–00 | HOLDER, BRAKE HOSE | 1 | 1 | | | | |
| 22 | 90111–06016 | BOLT,HEX. SOCKET BUTTON | 1 | 1 | | | | |
| 23 | 4WM–23497–00 | GROMMET | 2 | 2 | | | | |

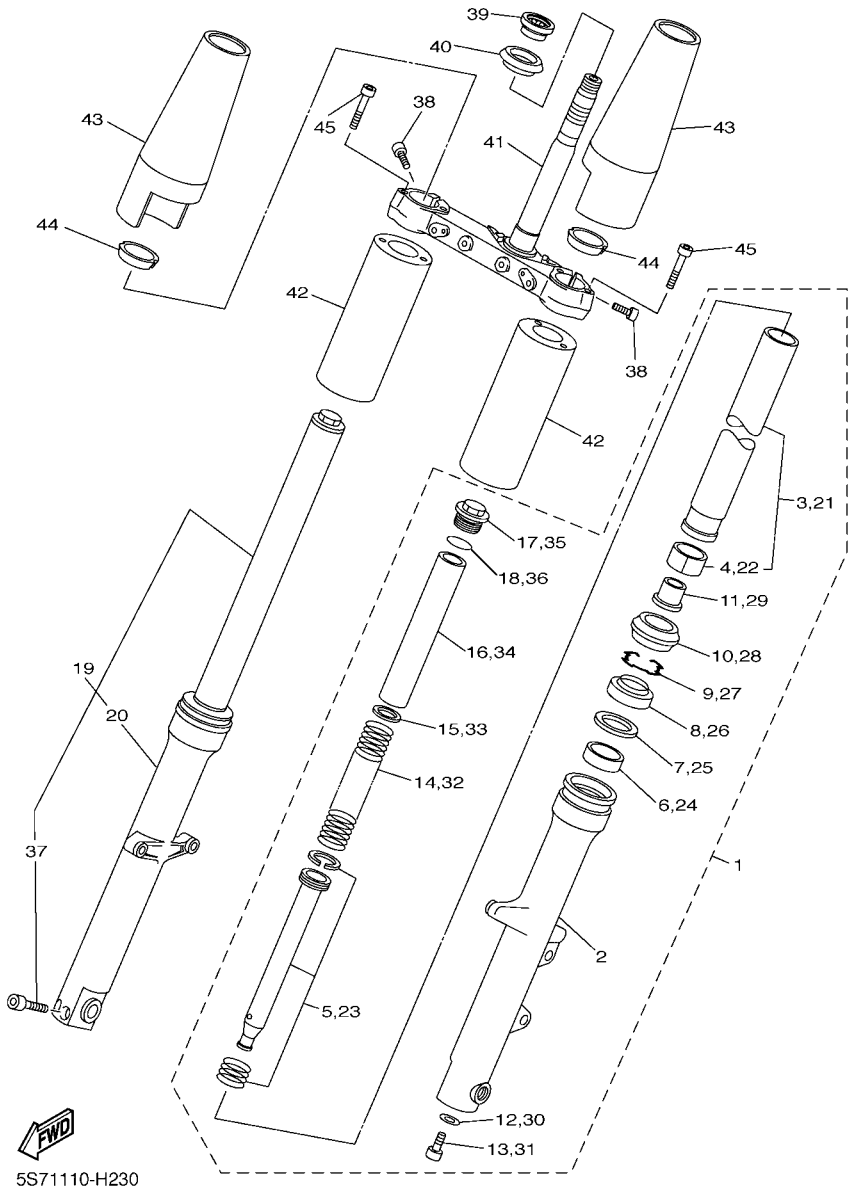


## FIG. 23 FRONT FORK

| REF. NO. | PART NO. | DESCRIPTION | 5S71 | 5S72 | | | | REMARKS |
|---|---|---|---|---|---|---|---|---|
| 1 | 5S7–23102–01 | FRONT FORK ASSY (L.H) | 1 | 1 | | | | |
| 2 | 5S7–23126–00 | .TUBE, OUTER (LEFT) | 1 | 1 | | | | |
| 3 | 3D8–23110–00 | .INNER TUBE COMP.1 | 1 | 1 | | | | |
| 4 | 5BN–23171–00 | ..PISTON, FRONT FORK | 1 | 1 | | | | |
| 5 | 5S7–23170–00 | .CYLINDER COMP., FRONT FORK | 1 | 1 | | | | |
| 6 | 4FM–23125–40 | .METAL, SLIDE 1 | 1 | 1 | | | | |
| 7 | 36Y–23146–10 | .WASHER, OIL SEAL | 1 | 1 | | | | |
| 8 | 4EB–23145–01 | .OIL SEAL | 1 | 1 | | | | |
| 9 | 26H–23156–00 | .RING, SNAP | 1 | 1 | | | | |
| 10 | 4EB–23144–00 | .SEAL, DUST | 1 | 1 | | | | |
| 11 | 4YR–23173–00 | .SPINDLE, TAPER | 1 | 1 | | | | |
| 12 | 509–23158–L0 | .GASKET | 1 | 1 | | | | |
| 13 | 278–23181–50 | .BOLT, HEXAGON SOCKET HEAD | 1 | 1 | | | | |
| 14 | 5S7–23141–00 | .SPRING, FRONT FORK | 1 | 1 | | | | |
| 15 | 4DW–23149–40 | .WASHER, SPRING UPPER | 1 | 1 | | | | |
| 16 | 5EL–23118–00 | .SPACER | 1 | 1 | | | | |
| 17 | 1D0–23111–00 | .BOLT, CAP | 1 | 1 | | | | |
| 18 | 43F–23188–10 | .O-RING | 1 | 1 | | | | |
| 19 | 5S7–23103–01 | FRONT FORK ASSY (R.H) | 1 | 1 | | | | |
| 20 | 5S7–23136–00 | .TUBE, OUTER (RIGHT) | 1 | 1 | | | | |
| 21 | 3D8–23110–00 | .INNER TUBE COMP.1 | 1 | 1 | | | | |
| 22 | 5BN–23171–00 | ..PISTON, FRONT FORK | 1 | 1 | | | | |
| 23 | 5S7–23170–00 | .CYLINDER COMP., FRONT FORK | 1 | 1 | | | | |
| 24 | 4FM–23125–40 | .METAL, SLIDE 1 | 1 | 1 | | | | |
| 25 | 36Y–23146–10 | .WASHER, OIL SEAL | 1 | 1 | | | | |
| 26 | 4EB–23145–01 | .OIL SEAL | 1 | 1 | | | | |
| 27 | 26H–23156–00 | .RING, SNAP | 1 | 1 | | | | |

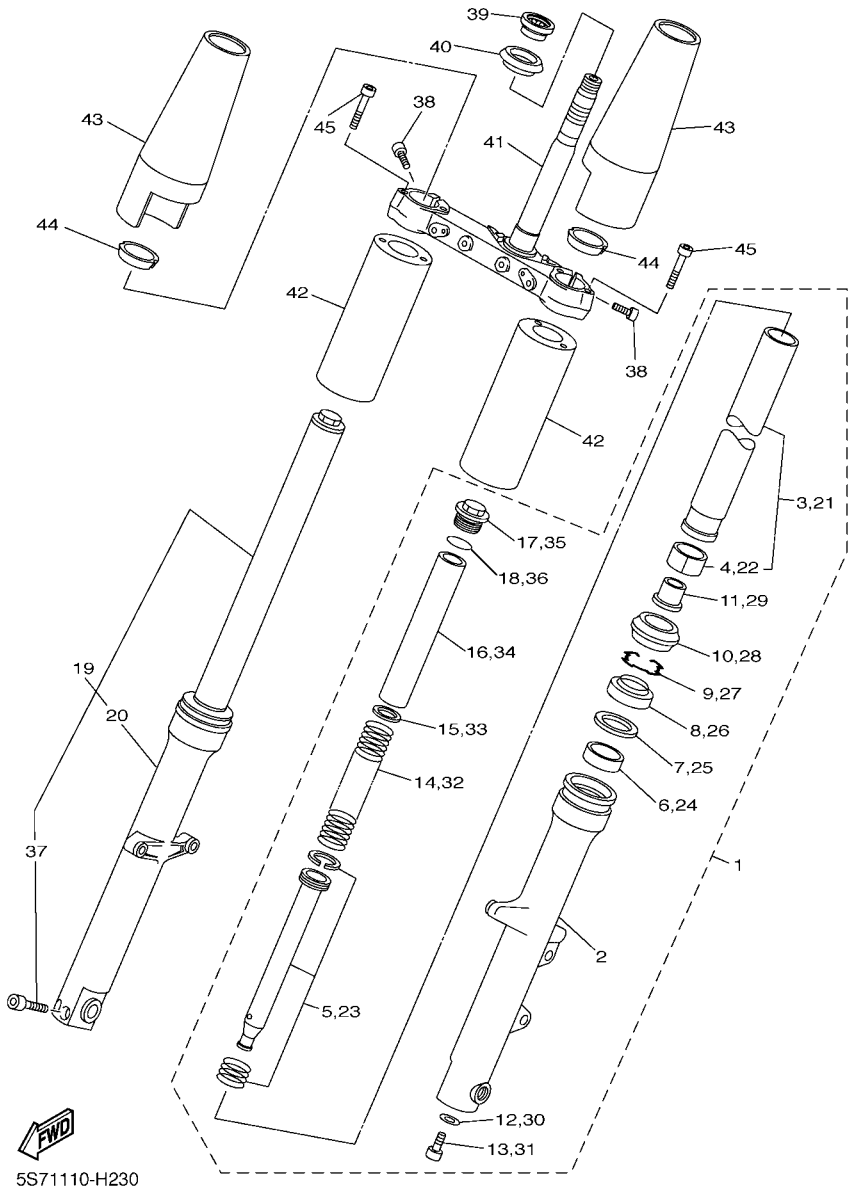


## FIG. 23 FRONT FORK

| REF. NO. | PART NO. | DESCRIPTION | 5S71 | 5S72 | | | | REMARKS |
|---|---|---|---|---|---|---|---|---|
| 28 | 4EB–23144–00 | .SEAL, DUST | 1 | 1 | | | | |
| 29 | 4YR–23173–00 | .SPINDLE, TAPER | 1 | 1 | | | | |
| 30 | 509–23158–L0 | .GASKET | 1 | 1 | | | | |
| 31 | 278–23181–50 | .BOLT, HEXAGON SOCKET HEAD | 1 | 1 | | | | |
| 32 | 5S7–23141–00 | .SPRING, FRONT FORK | 1 | 1 | | | | |
| 33 | 4DW–23149–40 | .WASHER, SPRING UPPER | 1 | 1 | | | | |
| 34 | 5EL–23118–00 | .SPACER | 1 | 1 | | | | |
| 35 | 1D0–23111–00 | .BOLT, CAP | 1 | 1 | | | | |
| 36 | 43F–23188–10 | .O-RING | 1 | 1 | | | | |
| 37 | 91314–08035 | .BOLT, HEXAGON SOCKET HEAD | 2 | 2 | | | | |
| 38 | 91314–10020 | BOLT, HEXAGON SOCKET HEAD | 4 | 4 | | | | |
| 39 | 93399–99932 | BEARING | 1 | 1 | | | | |
| 40 | 3FV–23462–00 | SEAL, STEERING | 1 | 1 | | | | |
| 41 | 5S7–23340–00 | UNDER BRACKET COMP. | 1 | 1 | | | | |
| 42 | 3D8–23123–00 | COVER, UNDER 1 | 2 | 2 | | | | |
| 43 | 3D8–23121–00 | COVER, UPPER 1 | 2 | 2 | | | | |
| 44 | 3D8–23163–00 | GASKET | 2 | 2 | | | | |
| 45 | 3D8–23394–20 | BOLT, SPECIAL | 4 | 4 | | | | |

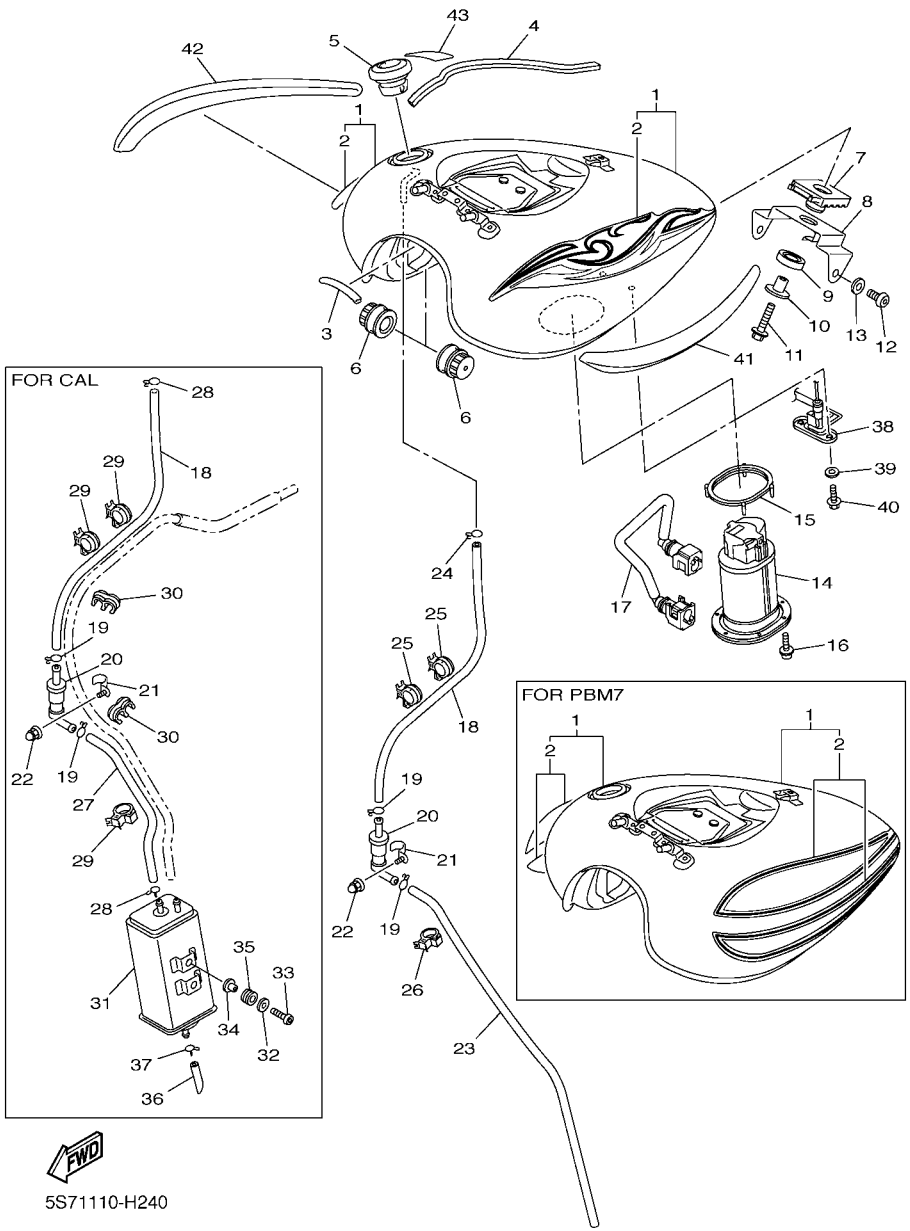


## FIG. 24 FUEL TANK

| REF. NO. | PART NO. | DESCRIPTION | 5S71 | 5S72 | | | | REMARKS |
|---|---|---|---|---|---|---|---|---|
| 1 | 5S7–Y2410–00–01 | FUEL TANK COMP. | 1 | 1 | | | | UR FOR DRMK |
| | 5S7–Y2410–00–03 | FUEL TANK COMP. | 1 | 1 | | | | UR FOR PBM7 |
| 2 | 5S7–24240–00 | .GRAPHIC SET | 1 | 1 | | | | UR FOR DRMK |
| | 5S7–24240–10 | .GRAPHIC SET | 1 | 1 | | | | UR FOR PBM7 |
| 3 | 4BP–24188–00 | MOLD, FUEL TANK | 1 | 1 | | | | |
| 4 | 5S7–24145–00 | DAMPER, SIDE COVER | 1 | 1 | | | | |
| 5 | 4NK–24602–12 | CAP ASSY | 1 | 1 | | | | |
| 6 | 5S7–24181–00 | DAMPER, LOCATING 1 | 2 | 2 | | | | |
| 7 | 1D7–24182–00 | DAMPER, LOCATING 2 | 1 | 1 | | | | |
| 8 | 5S7–2413Y–00 | BRACKET, TANK FITTING | 1 | 1 | | | | |
| 9 | 4TR–24183–00 | DAMPER, LOCATING 3 | 1 | 1 | | | | |
| 10 | 90387–06177 | COLLAR | 1 | 1 | | | | |
| 11 | 95812–06030 | BOLT, FLANGE | 1 | 1 | | | | |
| 12 | 92012–08014 | BOLT, BUTTON HEAD | 2 | 2 | | | | |
| 13 | 90201–08M01 | WASHER, PLATE | 2 | 2 | | | | |
| 14 | 5S7–13907–00 | FUEL PUMP COMP. | 1 | 1 | | | | |
| 15 | 5VN–24486–00 | O-RING | 1 | 1 | | | | |
| 16 | 90110–05028 | BOLT, HEXAGON SOCKET HEAD | 6 | 6 | | | | |
| 17 | 5S7–13971–00 | PIPE, FUEL 1 | 1 | 1 | | | | |
| 18 | 5S7–24313–00 | PIPE 3 | 1 | 1 | | | | |
| 19 | 90467–09103 | CLIP | 2 | 2 | | | | |
| 20 | 5RB–24180–00 | ROLL OVER VALVE ASSY | 1 | 1 | | | | |
| 21 | 5S7–24136–00 | CLAMP 2 | 1 | 1 | | | | |
| 22 | 90176–05004 | NUT, CROWN | 1 | 1 | | | | |
| 23 | 90445–115K4 | HOSE (L450) | 1 | | | | | |
| 24 | 90467–09103 | CLIP | 1 | | | | | |
| 25 | 90464–20191 | CLAMP | 2 | | | | | |

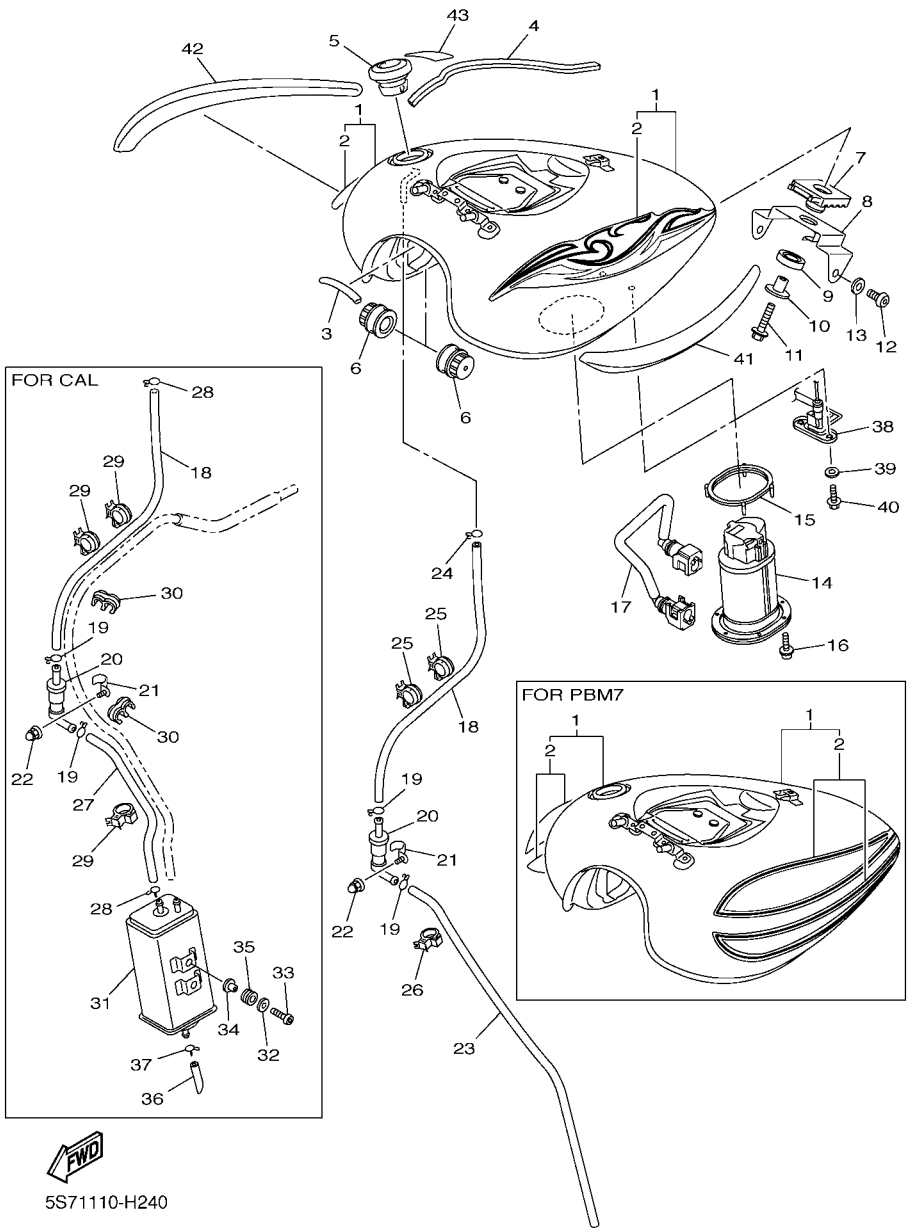


## FIG. 24 FUEL TANK

| REF. NO. | PART NO. | DESCRIPTION | 5S71 | 5S72 | | | | REMARKS |
|---|---|---|---|---|---|---|---|---|
| 26 | 90464–10190 | CLAMP | 1 | | | | | |
| 27 | 5S7–2486A–00 | PIPE 1 | | 1 | | | | FOR CALIFORNIA |
| 28 | 90467–09103 | CLIP | | 2 | | | | FOR CALIFORNIA |
| 29 | 90464–20191 | CLAMP | | 3 | | | | FOR CALIFORNIA |
| 30 | 90464–10M57 | CLAMP | | 2 | | | | FOR CALIFORNIA |
| 31 | 5PX–24170–00 | CANISTER ASSY | | 1 | | | | FOR CALIFORNIA |
| 32 | 90201–06023 | WASHER, PLATE | | 2 | | | | FOR CALIFORNIA |
| 33 | 90111–06067 | BOLT,HEX. SOCKET BUTTON | | 2 | | | | FOR CALIFORNIA |
| 34 | 90387–062L2 | COLLAR | | 2 | | | | FOR CALIFORNIA |
| 35 | 90480–13163 | GROMMET | | 2 | | | | FOR CALIFORNIA |
| 36 | 3D8–24325–00 | PIPE 14 | | 1 | | | | FOR CALIFORNIA |
| 37 | 90467–10041 | CLIP | | 1 | | | | FOR CALIFORNIA |
| 38 | 5S7–85752–00 | SENDER UNIT ASSY, FUEL METER | 1 | 1 | | | | |
| 39 | 90202–05193 | WASHER, PLATE | 2 | 2 | | | | |
| 40 | 95812–06016 | BOLT, FLANGE | 2 | 2 | | | | |
| 41 | 5S7–2416C–00 | EMBLEM 3D SET | 1 | 1 | | | | |
| 42 | 5S7–2417C–00 | EMBLEM 3D SET | 1 | 1 | | | | |
| 43 | 5GK–2118K–00 | LABEL, CAUTION | 1 | 1 | | | | |

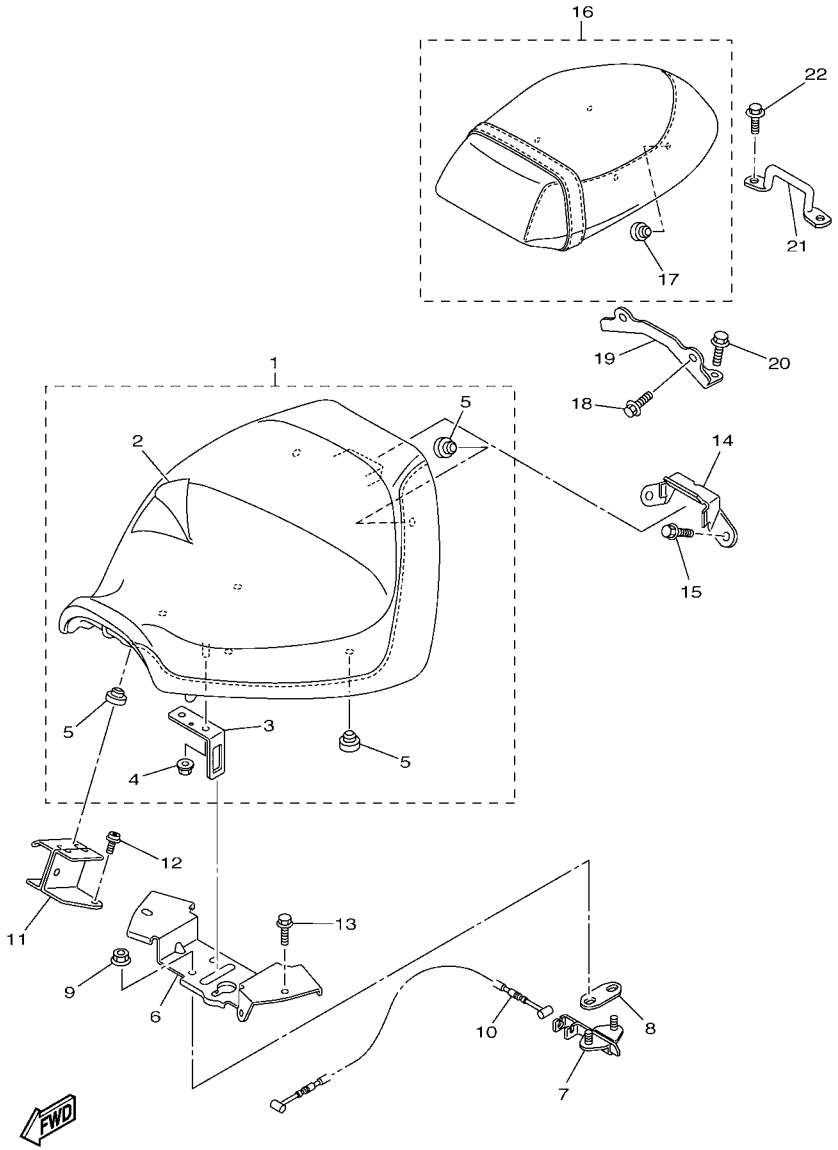

5S71110-H250

## FIG. 25 SEAT

| REF. NO. | PART NO. | DESCRIPTION | 5S71 | 5S72 | | | | REMARKS |
|---|---|---|---|---|---|---|---|---|
| 1 | 5S7–24710–01 | SINGLE SEAT ASSY | 1 | 1 | | | | |
| 2 | 5S7–2470F–00 | .SEAT COVER COMP. | 1 | 1 | | | | |
| 3 | 4NK–24728–00 | .BRACKET, SEAT | 1 | 1 | | | | |
| 4 | 95702–06500 | .NUT, FLANGE | 1 | 1 | | | | |
| 5 | 22W–24741–00 | .PAD, SEAT | 7 | 7 | | | | |
| 6 | 5S7–21341–00 | BRACKET, SEAT 1 | 1 | 1 | | | | |
| 7 | 4BP–24705–00 | SEAT LOCK ASSY | 1 | 1 | | | | |
| 8 | 4BP–24792–00 | PLATE | 1 | 1 | | | | |
| 9 | 95702–06500 | NUT, FLANGE | 2 | 2 | | | | |
| 10 | 5S7–2478E–00 | CABLE, SEAT LOCK | 1 | 1 | | | | |
| 11 | 5S7–2475J–00 | BRACKET, SEAT LEVER 2 | 1 | 1 | | | | |
| 12 | 90110–06245 | BOLT, HEXAGON SOCKET HEAD | 1 | 1 | | | | |
| 13 | 95822–06012 | BOLT, FLANGE | 2 | 2 | | | | |
| 14 | 5S7–2475N–00 | BRACKET | 1 | 1 | | | | |
| 15 | 90105–08126 | BOLT, FLANGE | 2 | 2 | | | | |
| 16 | 5S7–24750–00 | TANDEM SEAT ASSY | 1 | 1 | | | | |
| 17 | 22W–24741–00 | .PAD, SEAT | 4 | 4 | | | | |
| 18 | 95022–08012 | BOLT, FLANGE | 2 | 2 | | | | |
| 19 | 1D7–2475H–00 | BRACKET, SEAT LEVER 1 | 1 | 1 | | | | |
| 20 | 95022–08012 | BOLT, FLANGE | 2 | 2 | | | | |
| 21 | 5S7–2475R–00 | BRACKET 6 | 1 | 1 | | | | |
| 22 | 95022–08012 | BOLT, FLANGE | 2 | 2 | | | | |

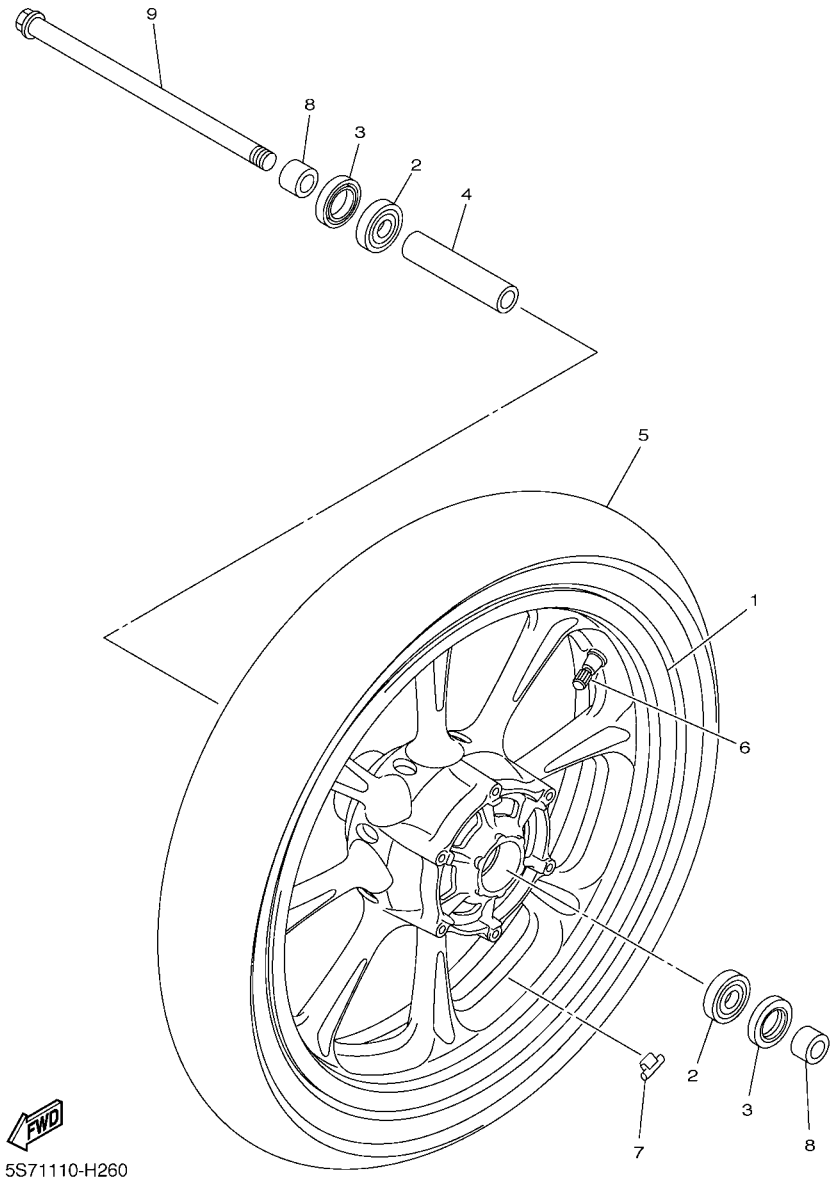


## FIG. 26 FRONT WHEEL

| REF. NO. | PART NO. | DESCRIPTION | 5S71 | 5S72 | | | | REMARKS |
|---|---|---|---|---|---|---|---|---|
| 1 | 5S7–25168–00–98 | CAST WHEEL, FRONT | 1 | 1 | | | | LGB |
| 2 | 93306–30317 | BEARING | 2 | 2 | | | | |
| 3 | 93102–28022 | OIL SEAL | 2 | 2 | | | | |
| 4 | 90387–173M5 | COLLAR | 1 | 1 | | | | |
| 5 | 94113–18025 | TIRE(130/70-18 M/C 63H EXEDRA) | 1 | 1 | | | | UR BRIDGESTONE |
| | 94113–18027 | TIRE(130/70-18 M/C 63H D404F) | 1 | 1 | | | | UR DUNLOP |
| 6 | 93900–00030 | VALVE, RIM (TR412) | 1 | 1 | | | | TAIHEIYO |
| 7 | 5MT–25398–00 | BALANCER, WHEEL (10G) | 1 | 1 | | | | UN |
| | 5MT–25398–10 | BALANCER, WHEEL (20G) | 1 | 1 | | | | UN |
| | 5MT–25398–20 | BALANCER, WHEEL (30G) | 1 | 1 | | | | UN |
| 8 | 90387–173R6 | COLLAR | 2 | 2 | | | | |
| 9 | 5KS–25181–00 | AXLE, WHEEL | 1 | 1 | | | | |

## FIG. 27 FRONT BRAKE CALIPER

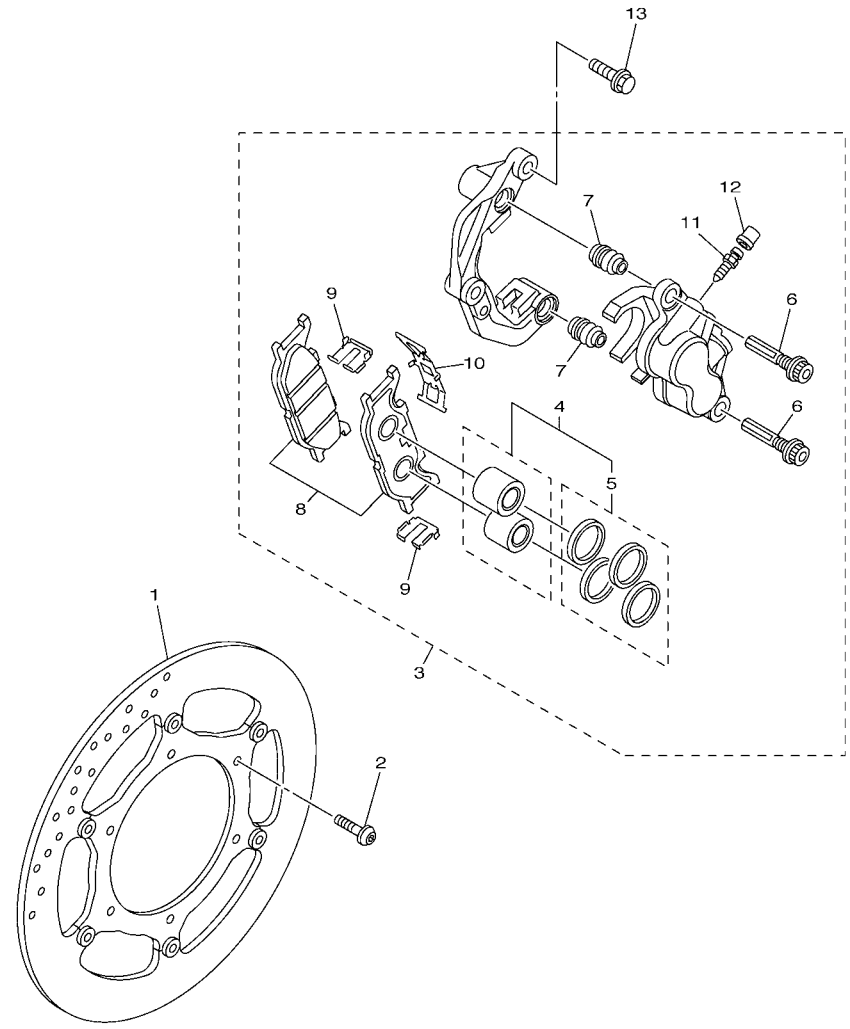


5S71110-H270

| REF. NO. | PART NO. | DESCRIPTION | 5S71 | 5S72 | | | | REMARKS |
|---|---|---|---|---|---|---|---|---|
| 1 | 3P6–2581T–00 | DISK BRAKE ASSY | 1 | 1 | | | | |
| 2 | 90109–083G4 | BOLT | 6 | 6 | | | | |
| 3 | 5S7–2580T–00 | CALIPER ASSY (LEFT) | 1 | 1 | | | | |
| 4 | 3YX–W0057–00 | .PISTON ASSY, CALIPER | 1 | 1 | | | | |
| 5 | 3JB–W0047–00 | ..CALIPER SEAL KIT | 1 | 1 | | | | |
| 6 | 5JW–25914–10 | .PIN, SLIDE | 2 | 2 | | | | |
| 7 | 4TT–25937–00 | .BOOT 2 | 2 | 2 | | | | |
| 8 | 5S7–W0045–00 | .BRAKE PAD KIT | 1 | 1 | | | | |
| 9 | 4BP–25919–00 | .SUPPORT, PAD | 2 | 2 | | | | |
| 10 | 3YX–25929–00 | .SPRING, ANTI RATTLE | 1 | 1 | | | | |
| 11 | 47X–25824–01 | .SCREW, BLEED | 1 | 1 | | | | |
| 12 | 1D7–25825–00 | .CAP | 1 | 1 | | | | |
| 13 | 90105–10638 | BOLT, FLANGE | 2 | 2 | | | | |

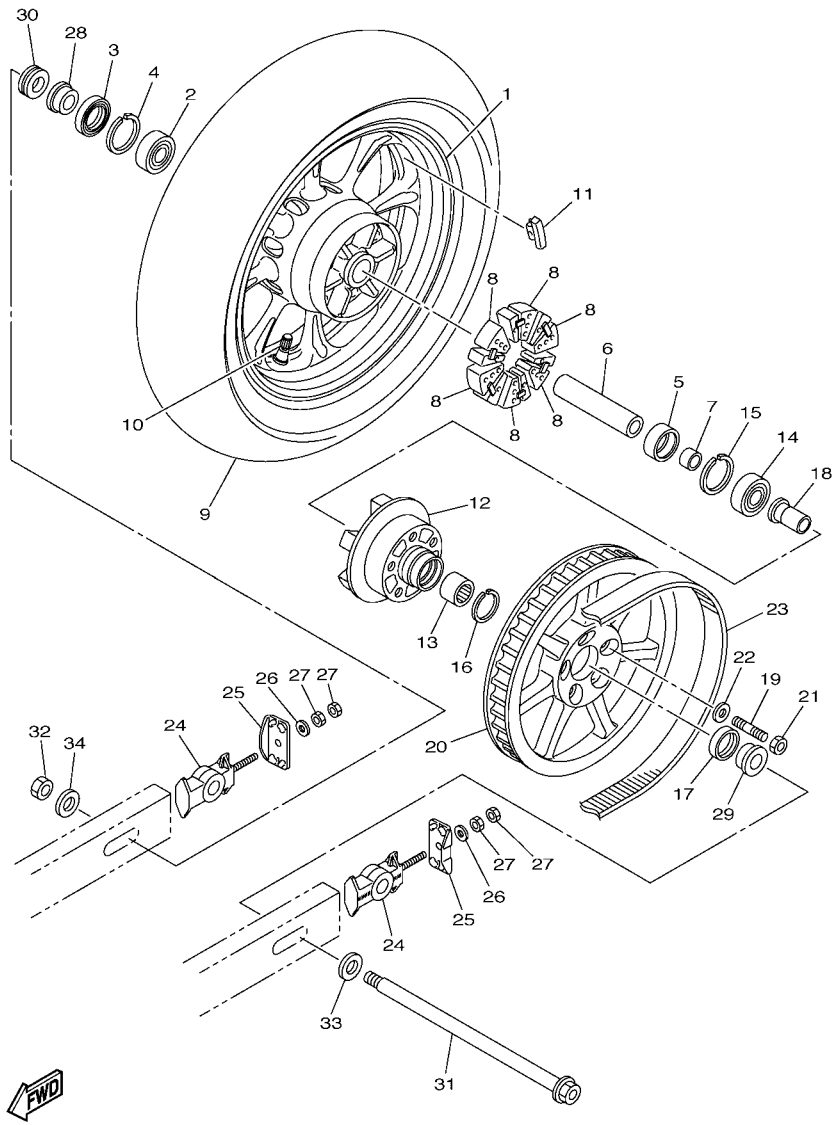


5S71110-H280

## FIG. 28 REAR WHEEL

| REF. NO. | PART NO. | DESCRIPTION | 5S71 | 5S72 | | | | REMARKS |
|---|---|---|---|---|---|---|---|---|
| 1 | 5S7–25338–00–98 | CAST WHEEL, REAR | 1 | 1 | | | | LGB |
| 2 | 93306–30437 | BEARING | 1 | 1 | | | | |
| 3 | 93106–28001 | OIL SEAL | 1 | 1 | | | | |
| 4 | 99009–52500 | CIRCLIP | 1 | 1 | | | | |
| 5 | 93320–32811 | BEARING | 1 | 1 | | | | |
| 6 | 3D8–25317–00 | SPACER, BEARING | 1 | 1 | | | | |
| 7 | 1D7–25383–00 | COLLAR, WHEEL | 1 | 1 | | | | |
| 8 | 4WM–25364–00 | DAMPER | 6 | 6 | | | | |
| 9 | 94117–16009 | TIRE (170/70B16M/C 75H EXEDR) | 1 | 1 | | | | UR BRIDGESTONE |
| | 94117–16001 | TIRE (170/70B16M/C 75H K555) | 1 | 1 | | | | UR DUNLOP |
| 10 | 93900–00030 | VALVE, RIM (TR412) | 1 | 1 | | | | TAIHEIYO |
| 11 | 5MT–25398–00 | BALANCER, WHEEL (10G) | 1 | 1 | | | | UN |
| | 5MT–25398–10 | BALANCER, WHEEL (20G) | 1 | 1 | | | | UN |
| | 5MT–25398–20 | BALANCER, WHEEL (30G) | 1 | 1 | | | | UN |
| 12 | 3D8–25366–00–98 | CLUTCH, HUB | 1 | 1 | | | | LGB |
| 13 | 93320–32612 | BEARING | 1 | 1 | | | | |
| 14 | 93306–30437 | BEARING | 1 | 1 | | | | |
| 15 | 99009–52500 | CIRCLIP | 1 | 1 | | | | |
| 16 | 93450–35163 | CIRCLIP | 1 | 1 | | | | |
| 17 | 93106–30004 | OIL SEAL | 1 | 1 | | | | |
| 18 | 3D8–25376–00 | COLLAR, WHEEL | 1 | 1 | | | | |
| 19 | 95612–12630 | BOLT, STUD | 5 | 5 | | | | |
| 20 | 3D8–25470–00 | SPROCKET, DRIVEN (70T) | 1 | 1 | | | | |
| 21 | 95614–12100 | NUT, U | 5 | 5 | | | | |
| 22 | 90201–12045 | WASHER, PLATE | 5 | 5 | | | | |
| 23 | 5S7–46241–00 | V-BELT | 1 | 1 | | | | |
| 24 | 5S7–25388–00 | PULLER, CHAIN 1 | 2 | 2 | | | | |

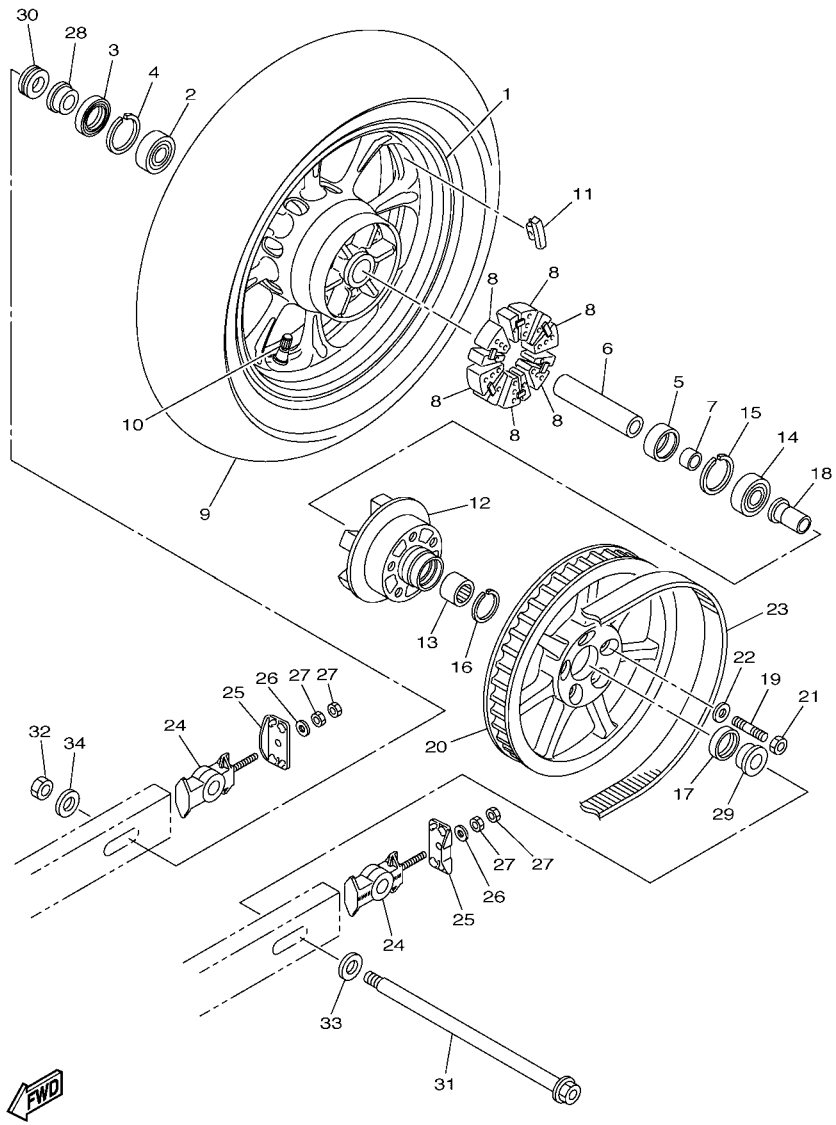


5S71110-H280

## FIG. 28 REAR WHEEL

| REF. NO. | PART NO. | DESCRIPTION | 5S71 | 5S72 | | | | REMARKS |
|---|---|---|---|---|---|---|---|---|
| 25 | 5S7–2539F–00 | PLATE 1 | 2 | 2 | | | | |
| 26 | 92902–08600 | WASHER, PLATE | 2 | 2 | | | | |
| 27 | 95304–08600 | NUT | 4 | 4 | | | | |
| 28 | 90387–20012 | COLLAR | 1 | 1 | | | | |
| 29 | 90387–202X9 | COLLAR | 1 | 1 | | | | |
| 30 | 5S7–2583B–00 | COLLAR, CALIPER | 1 | 1 | | | | |
| 31 | 5S7–25381–00 | AXLE, WHEEL | 1 | 1 | | | | |
| 32 | 90185–18167 | NUT, SELF-LOCKING | 1 | 1 | | | | |
| 33 | 90201–20029 | WASHER, PLATE | 1 | 1 | | | | |
| 34 | 90201–18029 | WASHER, PLATE | 1 | 1 | | | | |

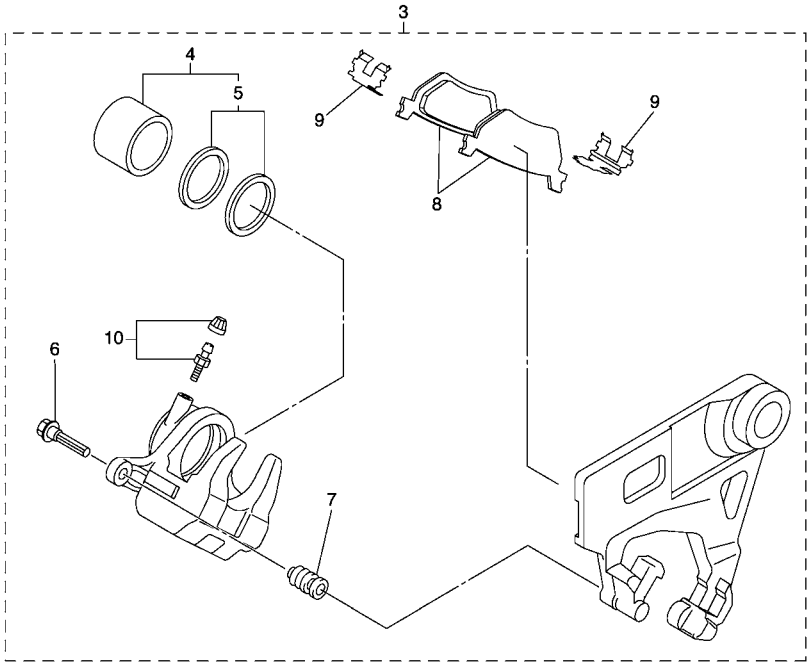


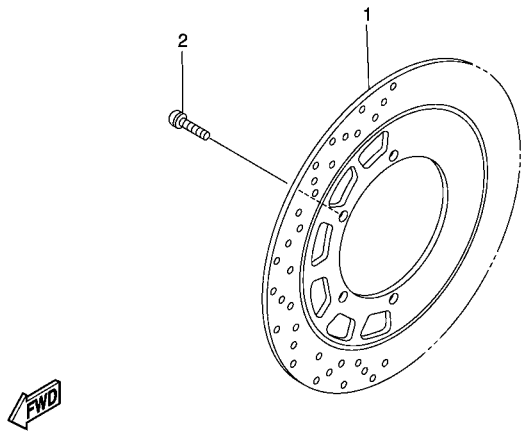


3D81100-F310

## FIG. 29 REAR BRAKE CALIPER

| REF. NO. | PART NO. | DESCRIPTION | 5S71 | 5S72 | | | | REMARKS |
|---|---|---|---|---|---|---|---|---|
| 1 | 3D8–2582W–00 | DISK, REAR BRAKE 2 | 1 | 1 | | | | |
| 2 | 90109–083G4 | BOLT | 6 | 6 | | | | |
| 3 | 3D8–2580W–00 | CALIPER ASSY, REAR 2 | 1 | 1 | | | | |
| 4 | 1D7–W0057–00 | .PISTON ASSY, CALIPER | 1 | 1 | | | | |
| 5 | 5JW–W0047–00 | ..CALIPER SEAL KIT | 1 | 1 | | | | |
| 6 | 5JW–25914–10 | .PIN, SLIDE | 2 | 2 | | | | |
| 7 | 4TT–25937–00 | .BOOT 2 | 2 | 2 | | | | |
| 8 | 1D7–W0046–00 | .BRAKE PAD KIT 2 | 1 | 1 | | | | |
| 9 | 1D7–25919–00 | .SUPPORT, PAD | 2 | 2 | | | | |
| 10 | 51L–W0048–00 | .BLEED SCREW KIT | 1 | 1 | | | | |

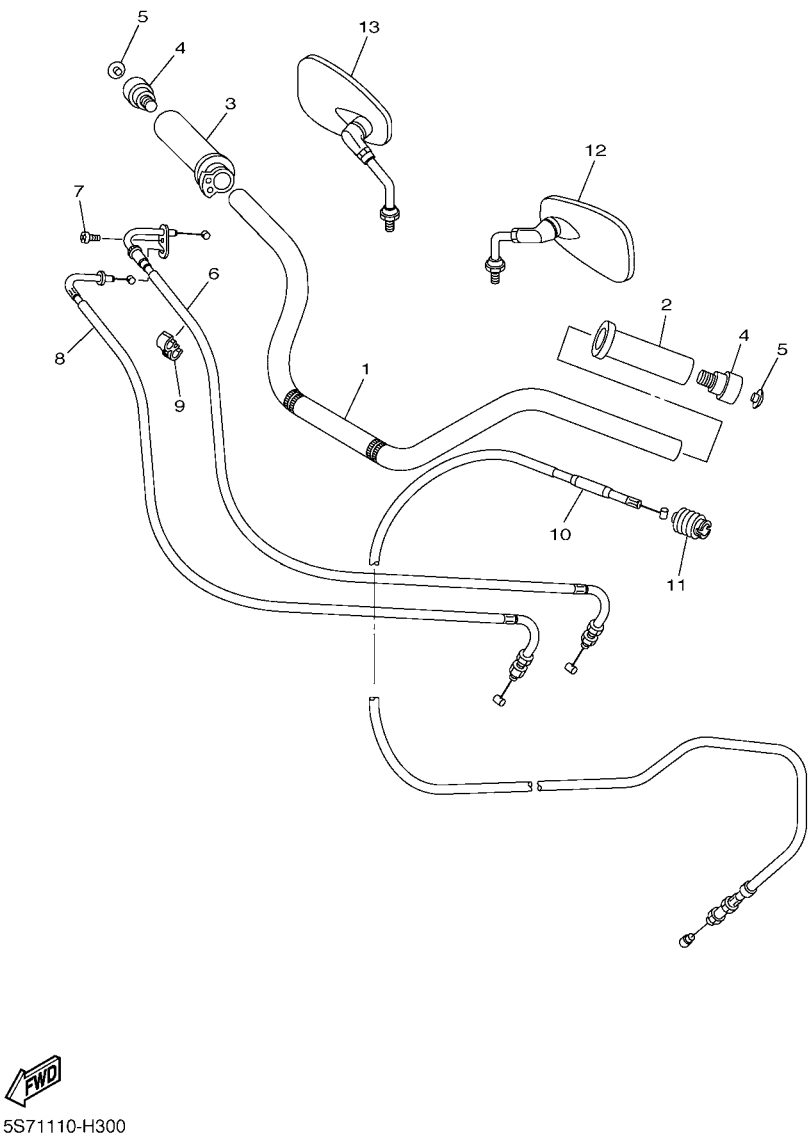


## FIG. 30 STEERING HANDLE & CABLE

| REF. NO. | PART NO. | DESCRIPTION | 5S71 | 5S72 | | | | REMARKS |
|---|---|---|---|---|---|---|---|---|
| 1 | 5S7–26111–00 | HANDLEBAR | 1 | 1 | | | | |
| 2 | 4NK–26241–00 | GRIP(LEFT) | 1 | 1 | | | | |
| 3 | 4XY–26240–00 | GRIP ASSY | 1 | 1 | | | | |
| 4 | 5EL–26246–00 | END, GRIP | 2 | 2 | | | | |
| 5 | 90338–10164 | PLUG | 2 | 2 | | | | |
| 6 | 5S7–26311–00 | CABLE, THROTTLE 1 | 1 | 1 | | | | |
| 7 | 98507–05016 | SCREW, PAN HEAD | 1 | 1 | | | | |
| 8 | 5S7–26312–00 | CABLE, THROTTLE 2 | 1 | 1 | | | | |
| 9 | 90464–06214 | CLAMP | 1 | 1 | | | | |
| 10 | 5S7–26335–00 | CABLE, CLUTCH | 1 | 1 | | | | |
| 11 | 1E6–26342–00 | BOOT, CABLE | 1 | 1 | | | | |
| 12 | 4XY–26280–10 | REAR VIEW MIRROR ASSY (LEFT) | 1 | 1 | | | | |
| 13 | 4XY–26290–10 | REAR VIEW MIRROR ASSY (RIGHT) | 1 | 1 | | | | |

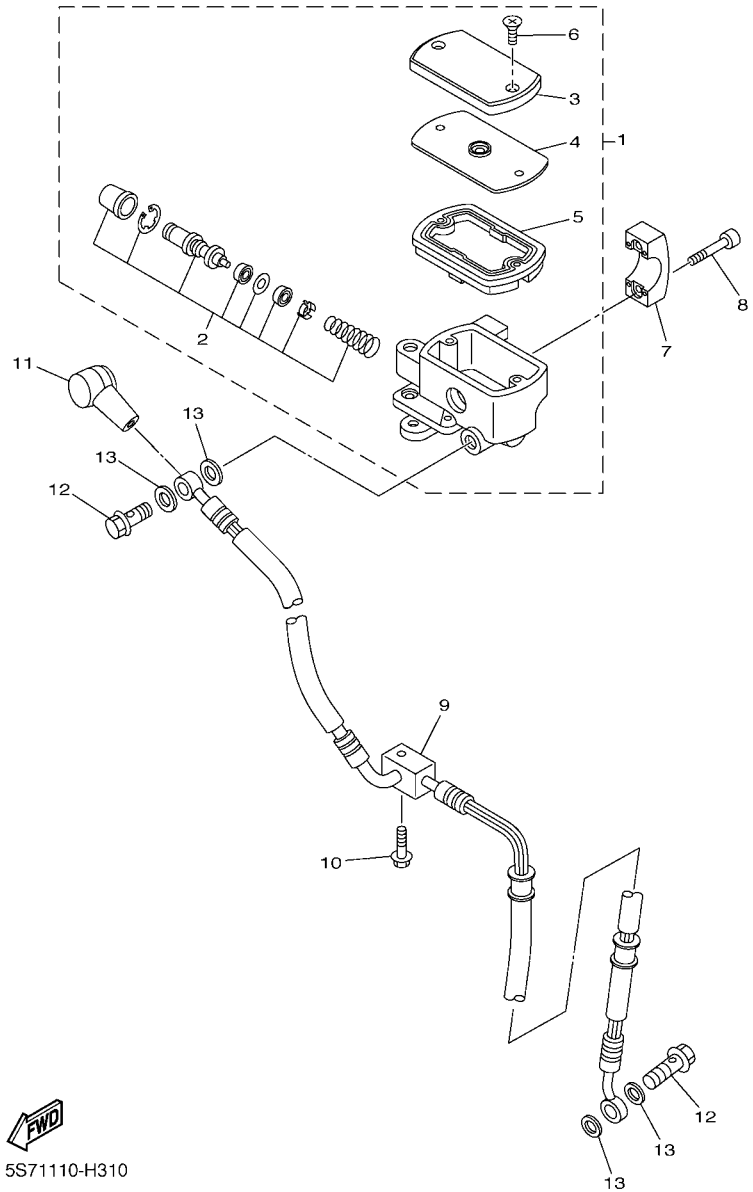


## FIG. 31 FRONT MASTER CYLINDER

| REF. NO. | PART NO. | DESCRIPTION | 5S71 | 5S72 | | | | REMARKS |
|---|---|---|---|---|---|---|---|---|
| 1 | 5S7–W2587–00 | MASTER CYLINDER SUB ASSY | 1 | 1 | | | | |
| 2 | 1JL–W0041–00 | .CYLINDER KIT, MASTER | 1 | 1 | | | | |
| 3 | 3D8–25852–00 | .CAP, RESERVOIR | 1 | 1 | | | | |
| 4 | 3D8–25855–00 | .BUSH,DIAPHRAGM | 1 | 1 | | | | |
| 5 | 3D8–25854–00 | .GASKET, DIAPHRAGM | 1 | 1 | | | | |
| 6 | 3D8–2589H–00 | .SCREW | 2 | 2 | | | | |
| 7 | 4TR–25867–10 | BRACKET, MASTER CYLINDER | 1 | 1 | | | | |
| 8 | 91314–06025 | BOLT, HEXAGON SOCKET HEAD | 2 | 2 | | | | |
| 9 | 5S7–25872–00 | HOSE, BRAKE 1 | 1 | 1 | | | | |
| 10 | 90105–06096 | BOLT, FLANGE | 1 | 1 | | | | |
| 11 | 4L0–25862–01 | BOOT, MASTER CYLINDER | 1 | 1 | | | | |
| 12 | 90401–10020 | BOLT, UNION | 2 | 2 | | | | |
| 13 | 90430–10005 | GASKET | 4 | 4 | | | | |

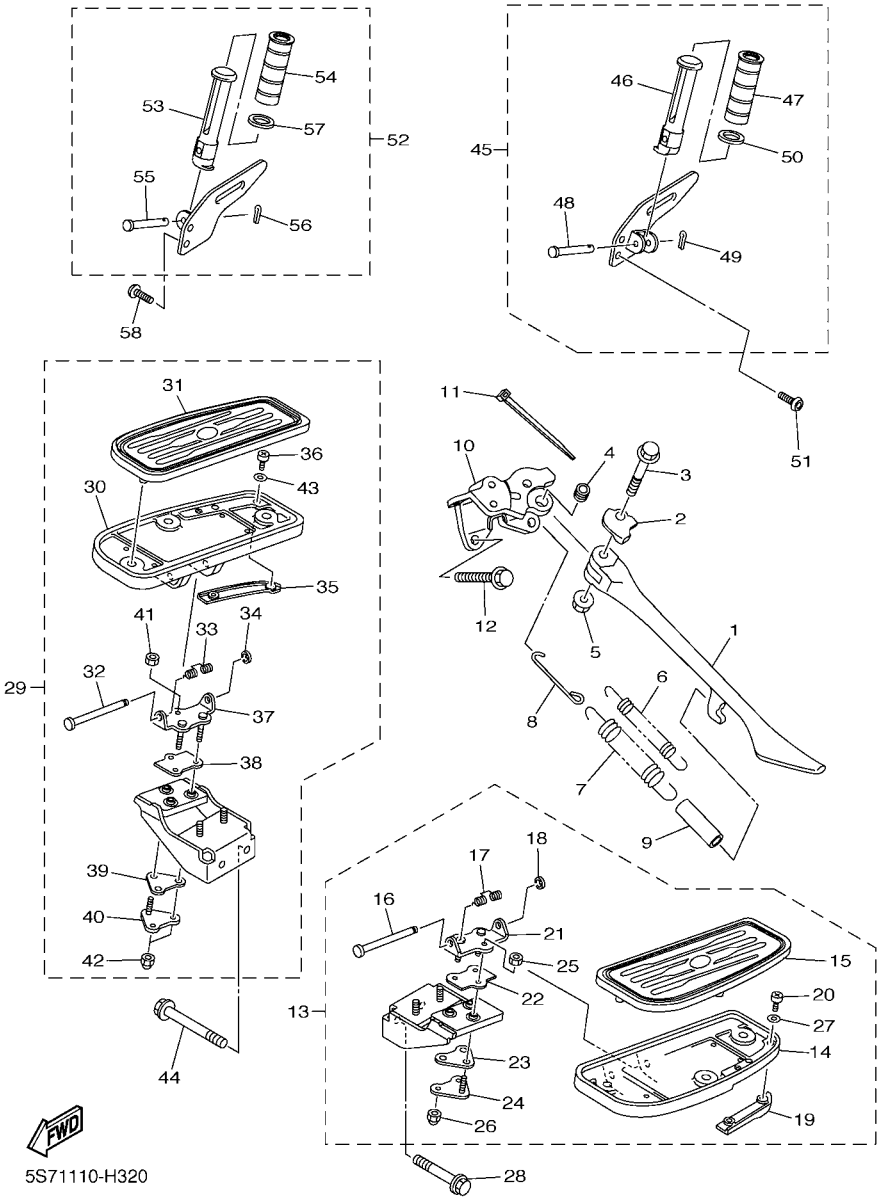


## FIG. 32 STAND & FOOTREST

| REF. NO. | PART NO. | DESCRIPTION | 5S71 | 5S72 | | | | REMARKS |
|---|---|---|---|---|---|---|---|---|
| 1 | 5S7–27311–00 | STAND, SIDE | 1 | 1 | | | | |
| 2 | 5S7–27322–00 | WASHER | 1 | 1 | | | | |
| 3 | 90105–10354 | BOLT, FLANGE | 1 | 1 | | | | |
| 4 | 90387–1003G | COLLAR | 1 | 1 | | | | |
| 5 | 90185–10008 | NUT, SELF-LOCKING | 1 | 1 | | | | |
| 6 | 90506–23015 | SPRING, TENSION | 1 | 1 | | | | |
| 7 | 90506–29006 | SPRING, TENSION | 1 | 1 | | | | |
| 8 | 3D8–27315–00 | LINK, SIDE STAND | 1 | 1 | | | | |
| 9 | 90445–16641 | HOSE (L60) | 1 | 1 | | | | |
| 10 | 3D8–27321–00 | BRACKET, SIDE STAND | 1 | 1 | | | | |
| 11 | 1UA–82591–00 | BAND | 1 | 1 | | | | |
| 12 | 90105–10157 | BOLT, FLANGE | 2 | 2 | | | | |
| 13 | 5S7–27410–00 | FRONT FOOTREST ASSY (LEFT) | 1 | 1 | | | | |
| 14 | 4NK–27451–10 | .FOOTREST | 1 | 1 | | | | |
| 15 | 5S7–27413–00 | .COVER, FOOTREST | 1 | 1 | | | | |
| 16 | 1D7–27427–00 | .SHAFT | 1 | 1 | | | | |
| 17 | 1D7–27426–00 | .SPRING, RETURN | 1 | 1 | | | | |
| 18 | 99002–06600 | .CLIP | 1 | 1 | | | | |
| 19 | 4WM–27496–00 | .MOLE 1 | 1 | 1 | | | | |
| 20 | 90157–05026 | .SCREW, PAN HEAD | 2 | 2 | | | | |
| 21 | 5S7–2787A–00 | .BRACKET 1 | 1 | 1 | | | | |
| 22 | 5S7–27414–00 | .DAMPER, FOOTREST | 1 | 1 | | | | |
| 23 | 5S7–27424–00 | .DAMPER, FOOTREST 2 | 1 | 1 | | | | |
| 24 | 5S7–27123–00 | .PLATE, STOPPER | 1 | 1 | | | | |
| 25 | 95312–06600 | .NUT | 1 | 1 | | | | |
| 26 | 90176–06041 | .NUT, CROWN | 2 | 2 | | | | |
| 27 | 92902–05200 | .WASHER | 2 | 2 | | | | |

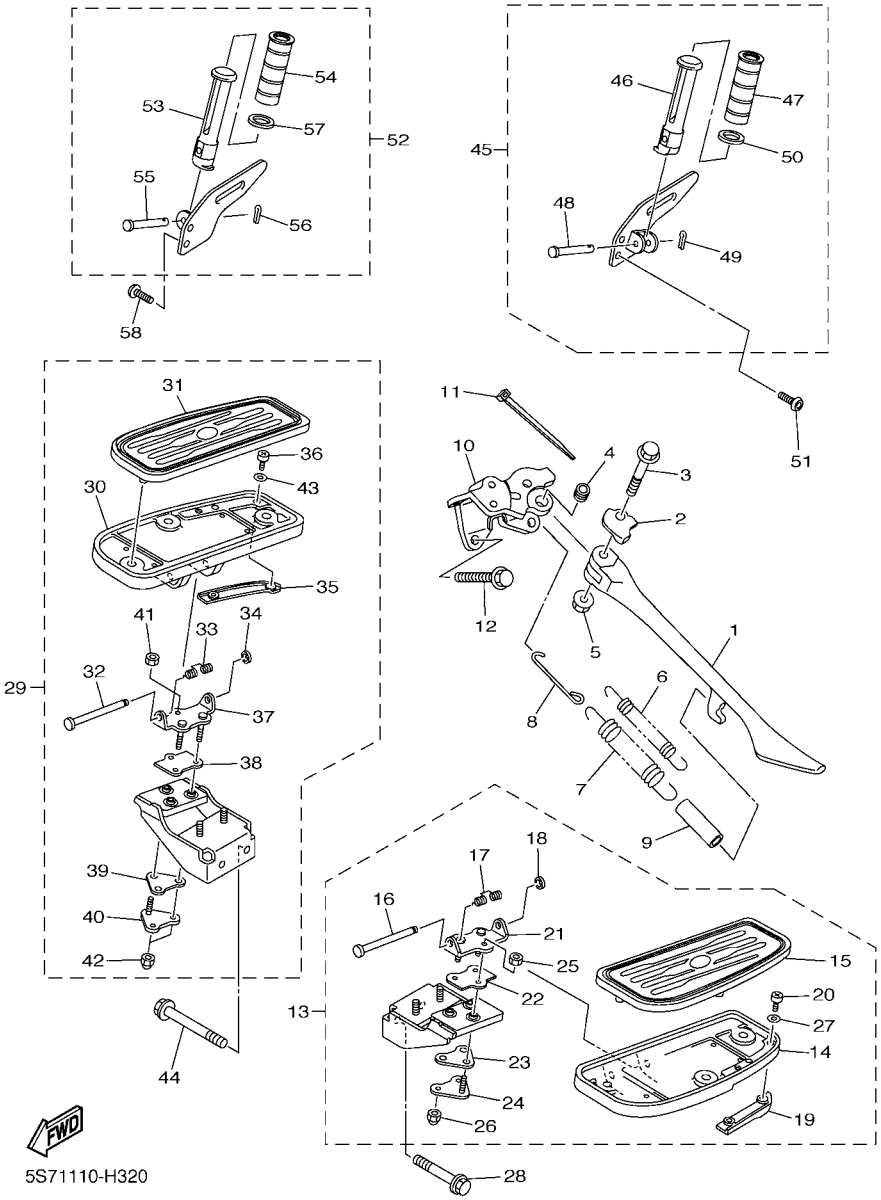


## FIG. 32 STAND & FOOTREST

| REF. NO. | PART NO. | DESCRIPTION | 5S71 | 5S72 | | | | REMARKS |
|---|---|---|---|---|---|---|---|---|
| 28 | 90105–10362 | BOLT, FLANGE | 2 | 2 | | | | |
| 29 | 5S7–27420–00 | FRONT FOOTREST ASSY (RIGHT) | 1 | 1 | | | | |
| 30 | 4NK–27461–10 | .FOOTREST | 1 | 1 | | | | |
| 31 | 5S7–27423–00 | .COVER, FOOTREST | 1 | 1 | | | | |
| 32 | 1D7–27427–00 | .SHAFT | 1 | 1 | | | | |
| 33 | 1D7–27426–00 | .SPRING, RETURN | 1 | 1 | | | | |
| 34 | 99002–06600 | .CLIP | 1 | 1 | | | | |
| 35 | 4WM–27497–00 | .MOLE 2 | 1 | 1 | | | | |
| 36 | 90157–05026 | .SCREW, PAN HEAD | 2 | 2 | | | | |
| 37 | 5S7–2787A–00 | .BRACKET 1 | 1 | 1 | | | | |
| 38 | 5S7–27414–00 | .DAMPER, FOOTREST | 1 | 1 | | | | |
| 39 | 5S7–27424–00 | .DAMPER, FOOTREST 2 | 1 | 1 | | | | |
| 40 | 5S7–27123–00 | .PLATE, STOPPER | 1 | 1 | | | | |
| 41 | 95312–06600 | .NUT | 1 | 1 | | | | |
| 42 | 90176–06041 | .NUT, CROWN | 2 | 2 | | | | |
| 43 | 92902–05200 | .WASHER | 2 | 2 | | | | |
| 44 | 90105–10345 | BOLT, FLANGE | 2 | 2 | | | | |
| 45 | 5S7–27430–00 | REAR FOOTREST ASSY 1 | 1 | 1 | | | | |
| 46 | 4WM–27431–00 | .FOOTREST, REAR 1 | 1 | 1 | | | | |
| 47 | 4WM–27433–00 | .COVER, REAR FOOTREST | 1 | 1 | | | | |
| 48 | 91701–06032 | .PIN | 1 | 1 | | | | |
| 49 | 91401–20012 | .PIN, COTTER | 1 | 1 | | | | |
| 50 | 90201–210U0 | .WASHER, PLATE | 1 | 1 | | | | |
| 51 | 90111–08031 | BOLT,HEX. SOCKET BUTTON | 2 | 2 | | | | |
| 52 | 5S7–27440–00 | REAR FOOTREST ASSY 2 | 1 | 1 | | | | |
| 53 | 4WM–27431–00 | .FOOTREST, REAR 1 | 1 | 1 | | | | |
| 54 | 4WM–27433–00 | .COVER, REAR FOOTREST | 1 | 1 | | | | |

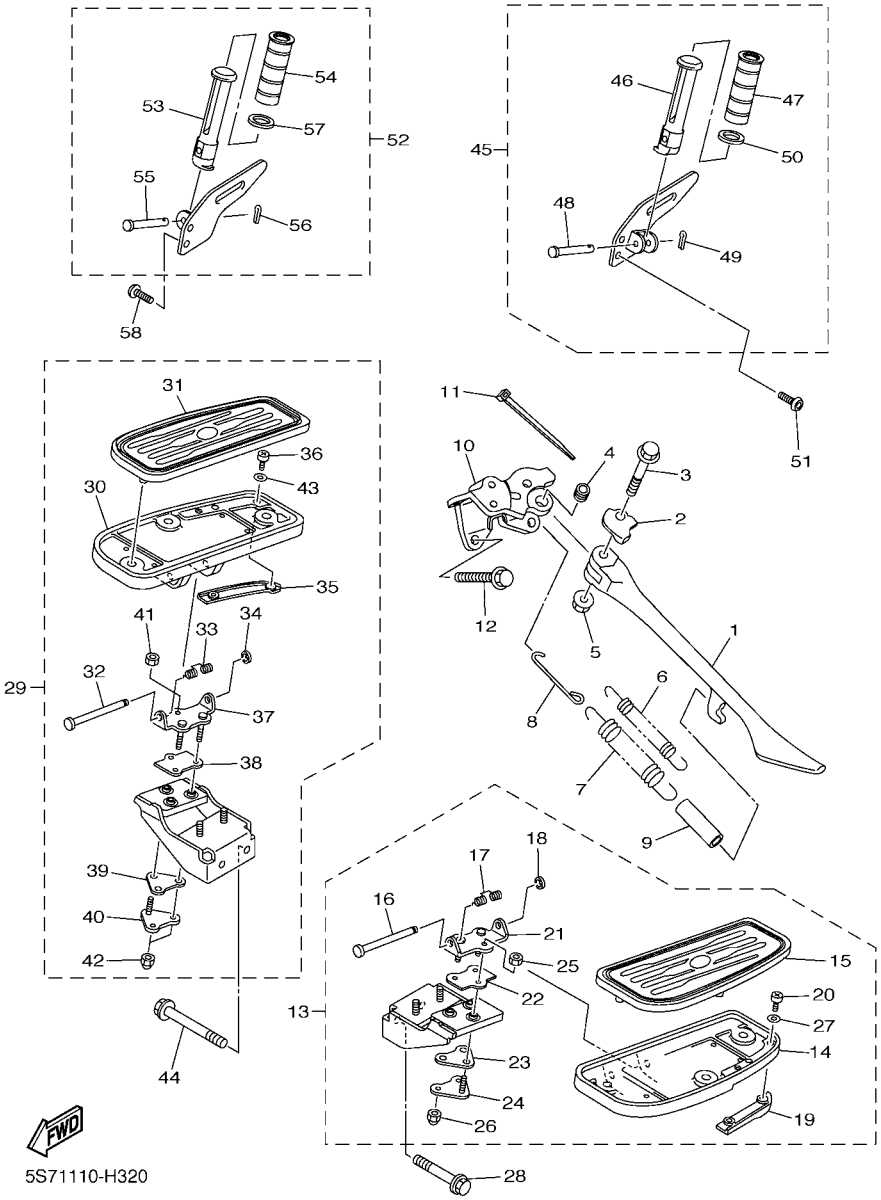


## FIG. 32 STAND & FOOTREST

| REF. NO. | PART NO. | DESCRIPTION | 5S71 | 5S72 | | | | REMARKS |
|---|---|---|---|---|---|---|---|---|
| 55 | 91701–06032 | .PIN | 1 | 1 | | | | |
| 56 | 91401–20012 | .PIN, COTTER | 1 | 1 | | | | |
| 57 | 90201–210U0 | .WASHER, PLATE | 1 | 1 | | | | |
| 58 | 90111–08031 | BOLT,HEX. SOCKET BUTTON | 2 | 2 | | | | |

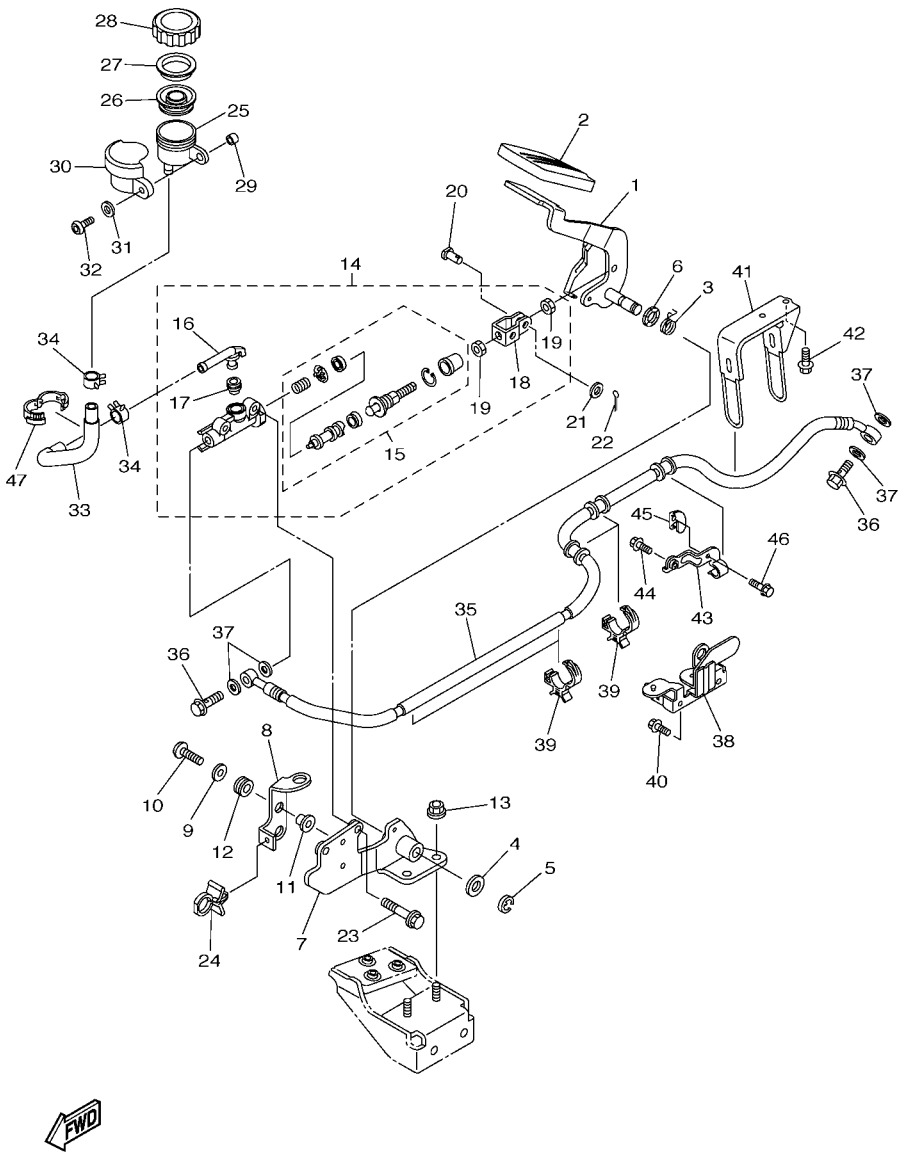


5S71110-H330

## FIG. 33 REAR MASTER CYLINDER

| REF. NO. | PART NO. | DESCRIPTION | 5S71 | 5S72 | | | | REMARKS |
|---|---|---|---|---|---|---|---|---|
| 1 | 5S7–27211–00 | PEDAL, BRAKE | 1 | 1 | | | | |
| 2 | 1D7–27285–00 | CAP | 1 | 1 | | | | |
| 3 | 5S7–27216–00 | SPRING, RETURN | 1 | 1 | | | | |
| 4 | 90201–12688 | WASHER, PLATE | 1 | 1 | | | | |
| 5 | 99009–12400 | CIRCLIP | 1 | 1 | | | | |
| 6 | 90206–12074 | WASHER, WAVE | 1 | 1 | | | | |
| 7 | 5S7–27432–00 | BRACKET 1 | 1 | 1 | | | | |
| 8 | 5S7–21441–00 | BRACKET, STOP SWITCH | 1 | 1 | | | | |
| 9 | 90201–06023 | WASHER, PLATE | 2 | 2 | | | | |
| 10 | 90111–06019 | BOLT,HEX. SOCKET BUTTON | 2 | 2 | | | | |
| 11 | 90387–06237 | COLLAR | 2 | 2 | | | | |
| 12 | 90480–13163 | GROMMET | 2 | 2 | | | | |
| 13 | 90176–08009 | NUT, CROWN | 2 | 2 | | | | |
| 14 | 4BP–2583V–01 | RR. MASTER CYLINDER ASSY. | 1 | 1 | | | | |
| 15 | 4BP–W0042–50 | .CYLINDER KIT, MASTER | 1 | 1 | | | | |
| 16 | 4BP–2582A–00 | .JOINT | 1 | 1 | | | | |
| 17 | 4BP–2585F–00 | .BUSH | 1 | 1 | | | | |
| 18 | 4BP–27222–02 | .JOINT | 1 | 1 | | | | |
| 19 | 90170–08010 | .NUT | 2 | 2 | | | | |
| 20 | 90240–08124 | PIN, CLEVIS | 1 | 1 | | | | |
| 21 | 90201–08083 | WASHER, PLATE | 1 | 1 | | | | |
| 22 | 91401–20012 | PIN, COTTER | 1 | 1 | | | | |
| 23 | 95817–08025 | BOLT, FLANGE | 2 | 2 | | | | |
| 24 | 90464–12001 | CLAMP | 1 | 1 | | | | |
| 25 | 31A–25894–10 | TANK, RESERVOIR | 1 | 1 | | | | |
| 26 | 360–25854–01 | GASKET, DIAPHRAGM | 1 | 1 | | | | |
| 27 | 2GU–25855–00 | BUSH,DIAPHRAGM | 1 | 1 | | | | |

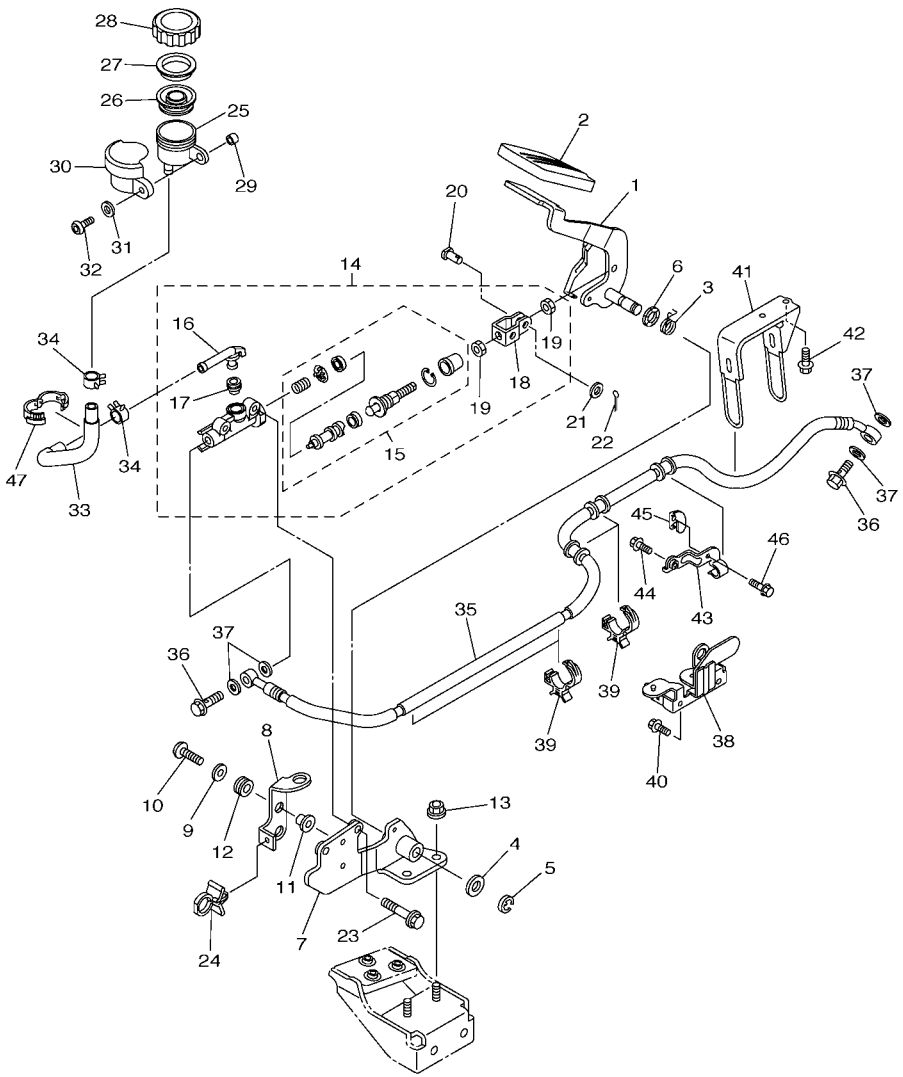


## FIG. 33 REAR MASTER CYLINDER

| REF. NO. | PART NO. | DESCRIPTION | 5S71 | 5S72 | | | | REMARKS |
|---|---|---|---|---|---|---|---|---|
| 28 | 2KF–25852–50 | CAP, RESERVOIR | 1 | 1 | | | | |
| 29 | 90387–06072 | COLLAR | 1 | 1 | | | | |
| 30 | 4NK–25888–00 | COVER, RESERVOIR TANK | 1 | 1 | | | | |
| 31 | 90201–06025 | WASHER, PLATE | 1 | 1 | | | | |
| 32 | 92014–06020 | BOLT, BUTTON HEAD | 1 | 1 | | | | |
| 33 | 5S7–25895–00 | HOSE, RESERVOIR | 1 | 1 | | | | |
| 34 | 90467–14057 | CLIP | 2 | 2 | | | | |
| 35 | 5S7–2581J–00 | HOSE, BRAKE 4 | 1 | 1 | | | | |
| 36 | 90401–10020 | BOLT, UNION | 2 | 2 | | | | |
| 37 | 90430–10005 | GASKET | 4 | 4 | | | | |
| 38 | 5S7–21374–00 | HOLDER, FUEL PIPE | 1 | 1 | | | | |
| 39 | 90464–15192 | CLAMP | 4 | 4 | | | | |
| 40 | 95022–06010 | BOLT, FLANGE | 2 | 2 | | | | |
| 41 | 5S7–2587A–00 | HOLDER, BRAKE HOSE | 1 | 1 | | | | |
| 42 | 95022–06016 | BOLT, FLANGE | 2 | 2 | | | | |
| 43 | 5S7–2588F–00 | HOLDER, BRAKE HOSE 5 | 1 | 1 | | | | |
| 44 | 90105–06126 | BOLT, FLANGE | 1 | 1 | | | | |
| 45 | 3D8–25887–00 | HOLDER, BRAKE HOSE | 1 | 1 | | | | |
| 46 | 95022–06010 | BOLT, FLANGE | 1 | 1 | | | | |
| 47 | 90464–16001 | CLAMP | 1 | 1 | | | | |

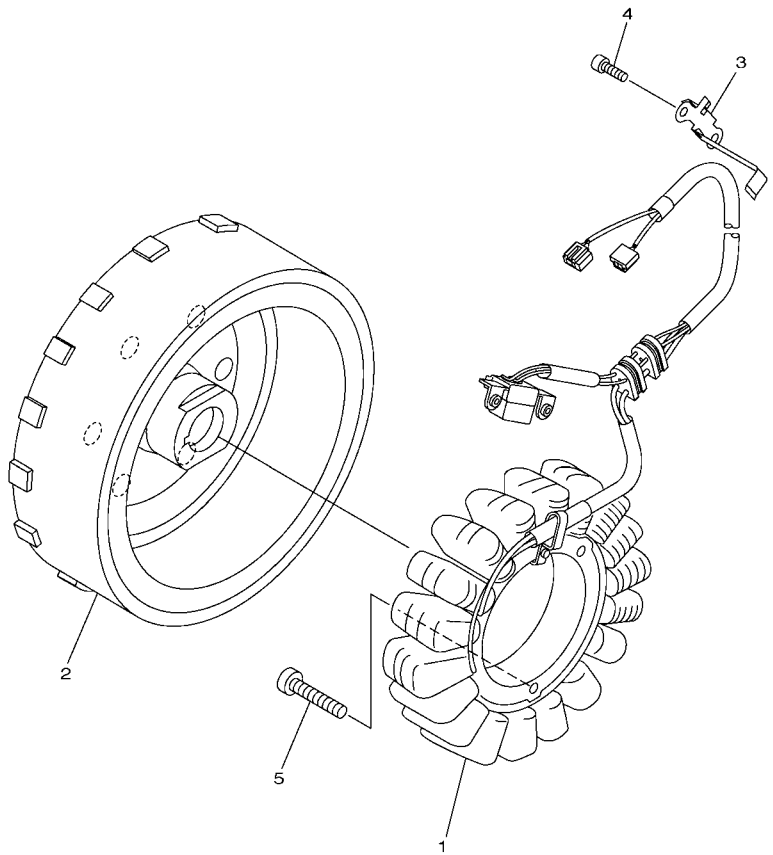

5S71110-H340

## FIG. 34 GENERATOR

| REF. NO. | PART NO. | DESCRIPTION | 5S71 | 5S72 | | | | REMARKS |
|---|---|---|---|---|---|---|---|---|
| 1 | 5S7–81410–00 | STATOR ASSY | 1 | 1 | | | | |
| 2 | 5S7–81450–00 | ROTOR ASSY | 1 | 1 | | | | |
| 3 | 5S7–15484–00 | CLAMP 2 | 1 | 1 | | | | |
| 4 | 90110–06161 | BOLT, HEXAGON SOCKET HEAD | 3 | 3 | | | | |
| 5 | 90110–06177 | BOLT, HEXAGON SOCKET HEAD | 3 | 3 | | | | |

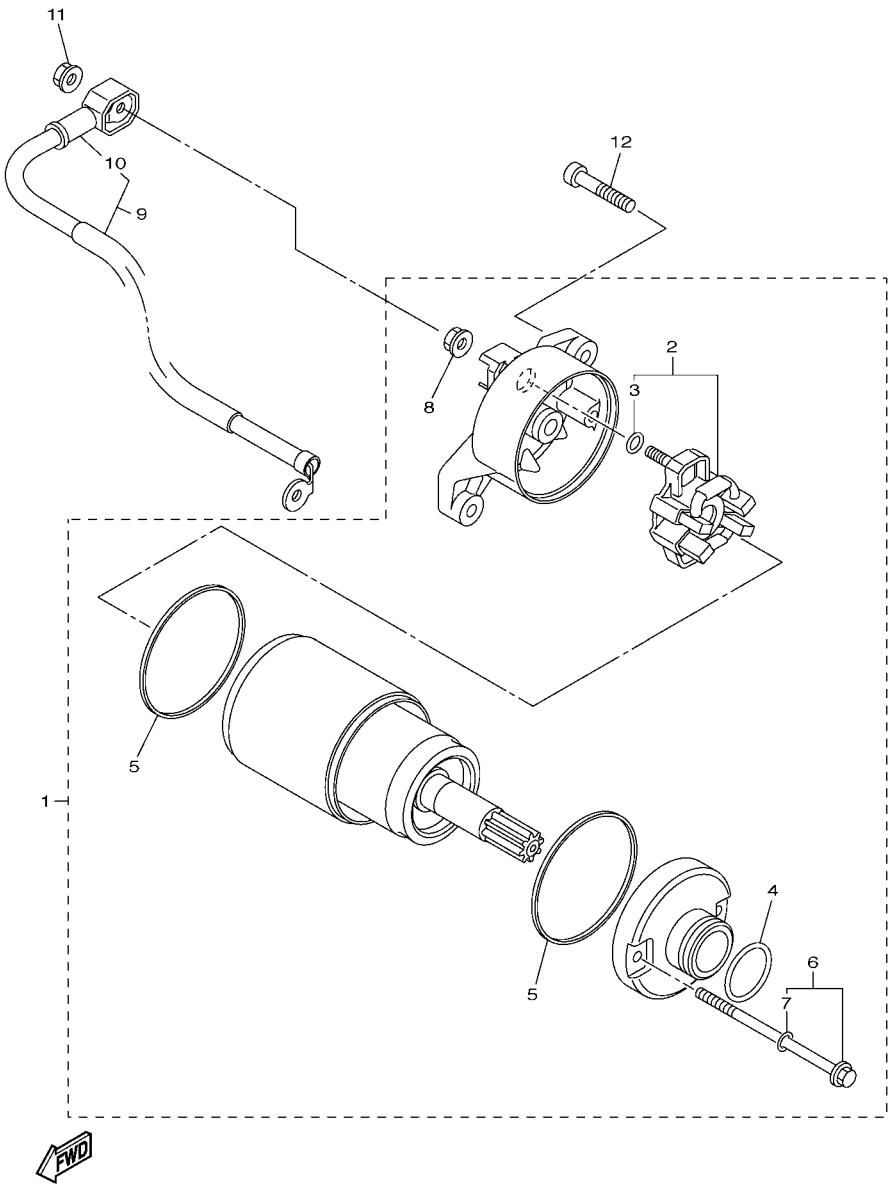


5S71110-H350

## FIG. 35 STARTING MOTOR

| REF. NO. | PART NO. | DESCRIPTION | 5S71 | 5S72 | | | | REMARKS |
|---|---|---|---|---|---|---|---|---|
| 1 | 5S7–81890–00 | MOTOR ASSY | 1 | 1 | | | | |
| 2 | 4B5–81840–00 | .BRUSH HOLDER ASSY | 1 | 1 | | | | |
| 3 | 3TB–81847–00 | ..O-RING | 1 | 1 | | | | |
| 4 | 1FK–81847–00 | .O-RING | 1 | 1 | | | | |
| 5 | 11H–81844–00 | .GASKET | 2 | 2 | | | | |
| 6 | 28P–81826–00 | .BOLT | 2 | 2 | | | | |
| 7 | 3TB–81847–00 | ..O-RING | 1 | 1 | | | | |
| 8 | 4XV–8182A–00 | .NUT | 1 | 1 | | | | |
| 9 | 5S7–81815–00 | CORD, STARTER MOTOR | 1 | 1 | | | | |
| 10 | 4B5–81871–00 | .CAP | 1 | 1 | | | | |
| 11 | 4XV–8182A–00 | NUT | 1 | 1 | | | | |
| 12 | 91314–06030 | BOLT, HEXAGON SOCKET HEAD | 2 | 2 | | | | |

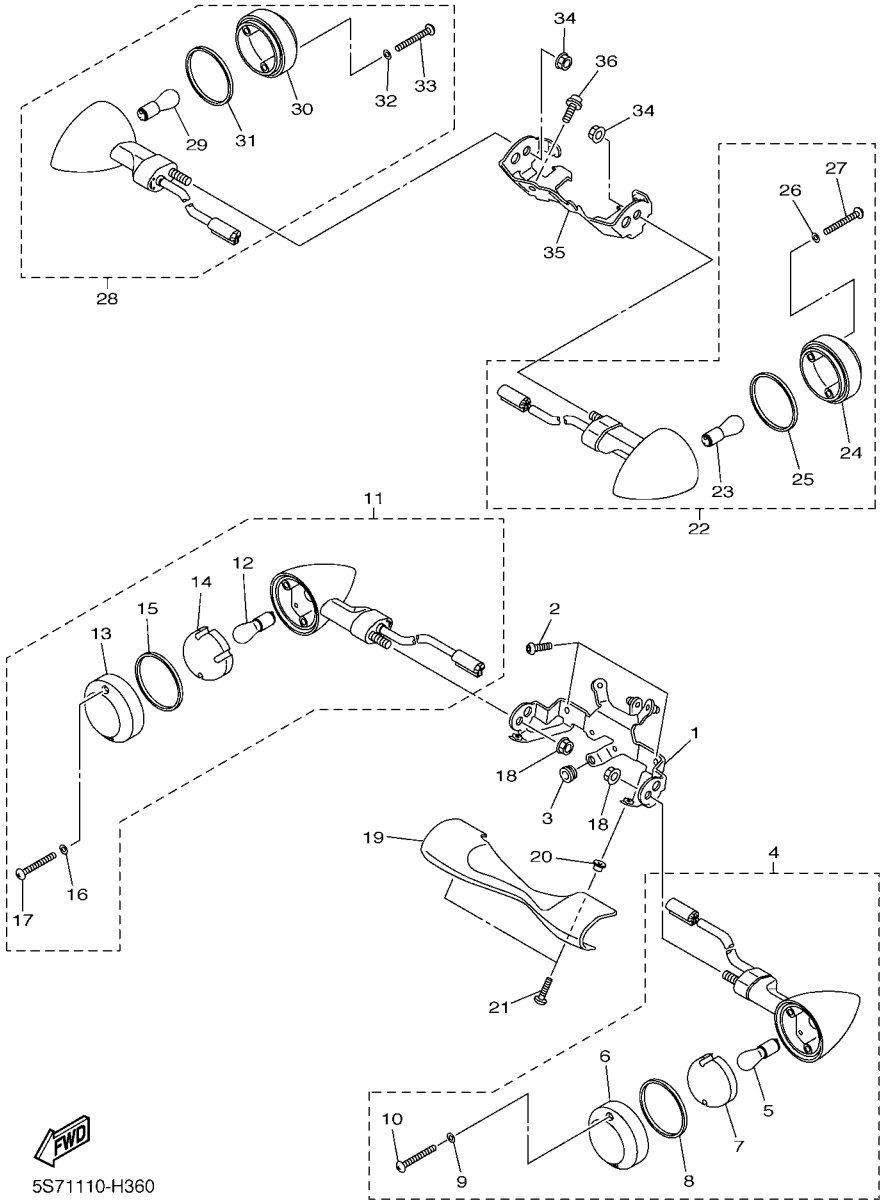


## FIG. 36 FLASHER LIGHT

| REF. NO. | PART NO. | DESCRIPTION | 5S71 | 5S72 | | | | REMARKS |
|---|---|---|---|---|---|---|---|---|
| 1 | 5S7–23174–00 | STAY, HEADLIGHT | 1 | 1 | | | | |
| 2 | 92012–08016 | BOLT, BUTTON HEAD | 2 | 2 | | | | |
| 3 | 90480–13398 | GROMMET | 1 | 1 | | | | |
| 4 | 3D8–83310–00 | FRONT FLASHER LIGHT ASSY 1 | 1 | 1 | | | | |
| 5 | 1A2–84714–41 | .BULB (12V-21/5W) | 1 | 1 | | | | |
| 6 | 3D8–83312–00 | .LENS, FLASHER | 1 | 1 | | | | |
| 7 | 3D8–8333L–00 | .LENS, INNER 1 | 1 | 1 | | | | |
| 8 | 3D8–83313–00 | .GASKET, FLASHER LENS | 1 | 1 | | | | |
| 9 | 3D8–83348–00 | .WASHER | 2 | 2 | | | | |
| 10 | 97702–40630 | .SCREW, TAPPING | 2 | 2 | | | | |
| 11 | 3D8–83320–00 | FRONT FLASHER LIGHT ASSY 2 | 1 | 1 | | | | |
| 12 | 1A2–84714–41 | .BULB (12V-21/5W) | 1 | 1 | | | | |
| 13 | 3D8–83312–00 | .LENS, FLASHER | 1 | 1 | | | | |
| 14 | 3D8–8333L–00 | .LENS, INNER 1 | 1 | 1 | | | | |
| 15 | 3D8–83313–00 | .GASKET, FLASHER LENS | 1 | 1 | | | | |
| 16 | 3D8–83348–00 | .WASHER | 2 | 2 | | | | |
| 17 | 97702–40630 | .SCREW, TAPPING | 2 | 2 | | | | |
| 18 | 95702–10500 | NUT, WITH WASHER | 2 | 2 | | | | |
| 19 | 3D8–23122–00 | COVER, OUTER 1 | 1 | 1 | | | | |
| 20 | 90387–06255 | COLLAR | 2 | 2 | | | | |
| 21 | 90111–05037 | BOLT,HEX. SOCKET BUTTON | 2 | 2 | | | | |
| 22 | 3D8–83330–00 | REAR FLASHER LIGHT ASSY 1 | 1 | 1 | | | | |
| 23 | 3D8–83311–00 | .BULB, FLASHER (12V21W) | 1 | 1 | | | | |
| 24 | 3D8–83312–00 | .LENS, FLASHER | 1 | 1 | | | | |
| 25 | 3D8–83313–00 | .GASKET, FLASHER LENS | 1 | 1 | | | | |
| 26 | 3D8–83348–00 | .WASHER | 2 | 2 | | | | |
| 27 | 97702–40630 | .SCREW, TAPPING | 2 | 2 | | | | |

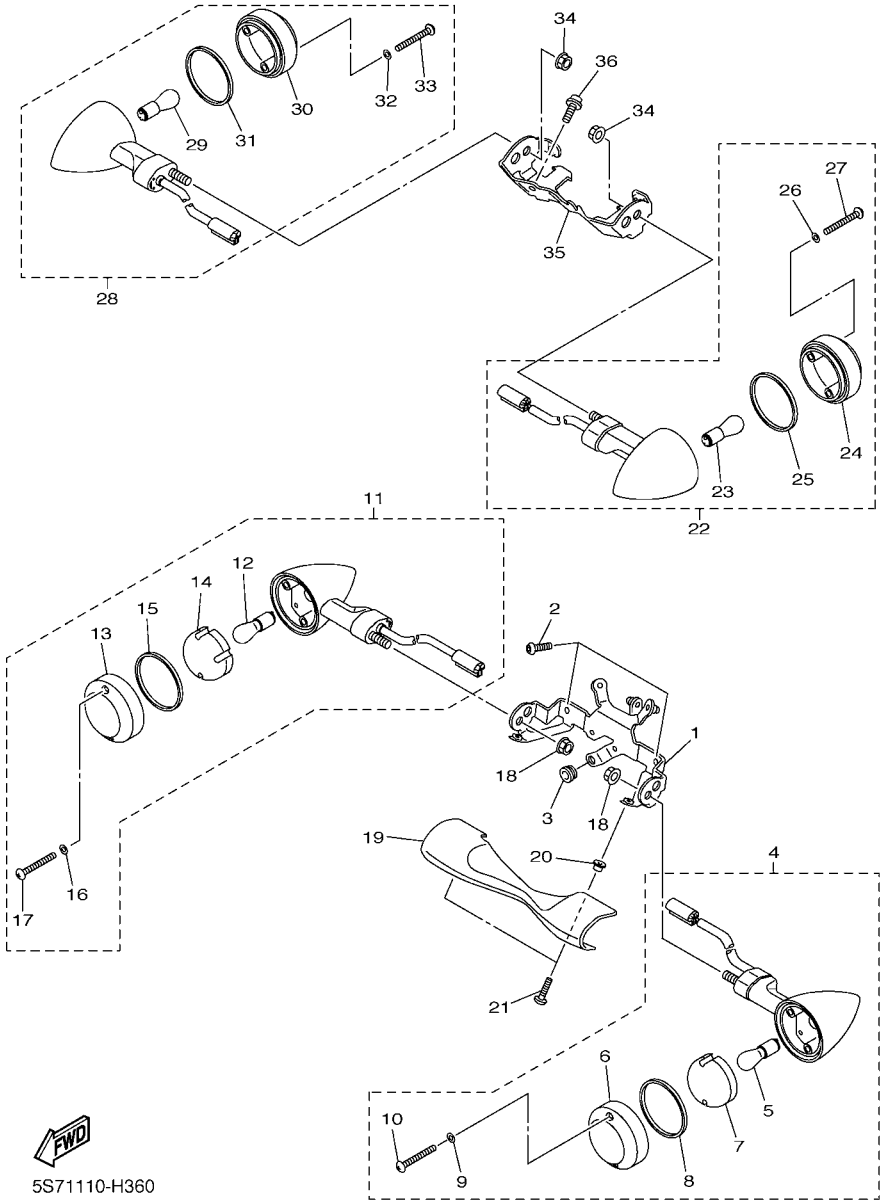


## FIG. 36 FLASHER LIGHT

| REF. NO. | PART NO. | DESCRIPTION | 5S71 | 5S72 | | | | REMARKS |
|---|---|---|---|---|---|---|---|---|
| 28 | 3D8–83340–00 | REAR FLASHER LIGHT ASSY 2 | 1 | 1 | | | | |
| 29 | 3D8–83311–00 | .BULB, FLASHER (12V21W) | 1 | 1 | | | | |
| 30 | 3D8–83312–00 | .LENS, FLASHER | 1 | 1 | | | | |
| 31 | 3D8–83313–00 | .GASKET, FLASHER LENS | 1 | 1 | | | | |
| 32 | 3D8–83348–00 | .WASHER | 2 | 2 | | | | |
| 33 | 97702–40630 | .SCREW, TAPPING | 2 | 2 | | | | |
| 34 | 95702–10500 | NUT, WITH WASHER | 2 | 2 | | | | |
| 35 | 5S7–83368–00 | STAY, FLASHER 1 | 1 | 1 | | | | |
| 36 | 90110–06276 | BOLT, HEXAGON SOCKET HEAD | 2 | 2 | | | | |

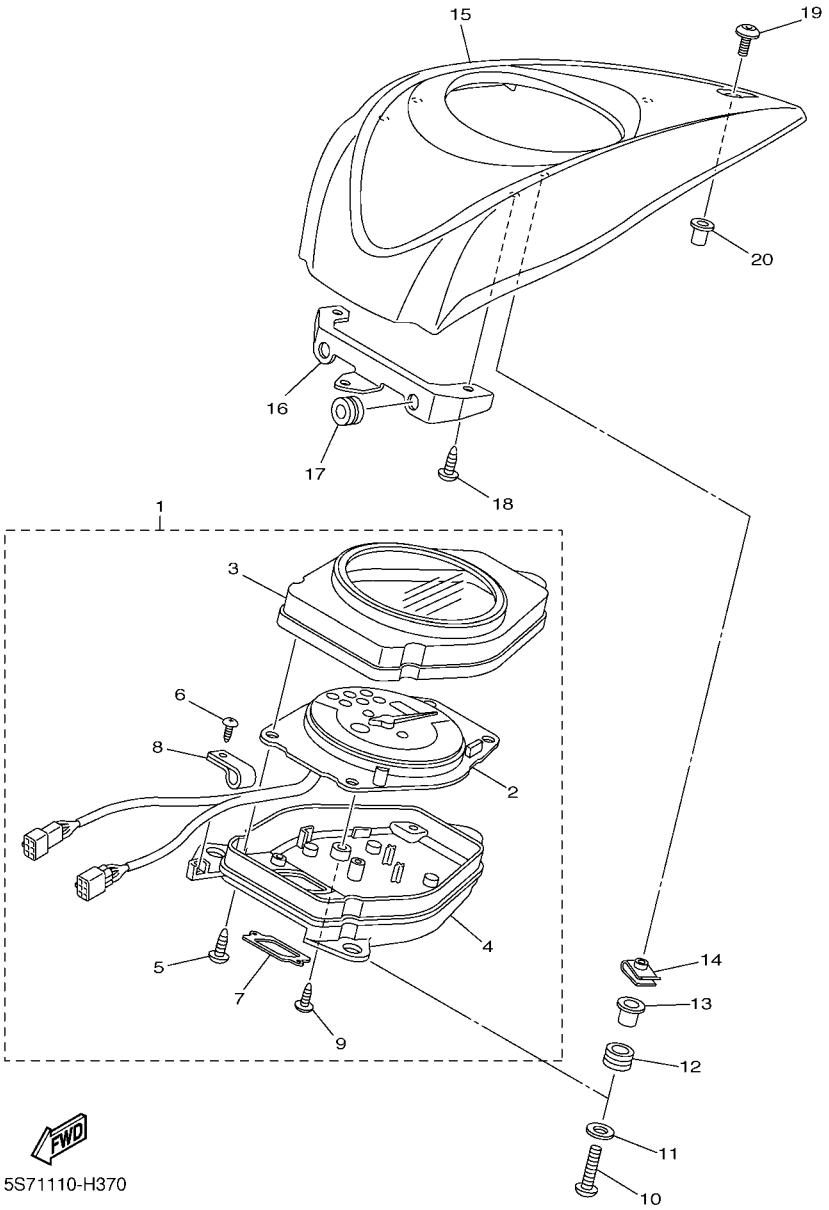


## FIG. 37 METER

| REF. NO. | PART NO. | DESCRIPTION | 5S71 | 5S72 | | | | REMARKS |
|---|---|---|---|---|---|---|---|---|
| 1 | 5S7–83500–00 | METER ASSY (MPH) | 1 | 1 | | | | |
| 2 | 5S7–83510–00 | .SPEEDOMETER ASSY | 1 | 1 | | | | |
| 3 | 5VN–8353E–20 | .CASE, METER UPPER | 1 | 1 | | | | |
| 4 | 4WM–8353F–02 | .CASE, METER LOWER | 1 | 1 | | | | |
| 5 | 97707–40016 | .SCREW, TAPPING | 4 | 4 | | | | |
| 6 | 90164–04023 | .SCREW, TAPPING | 1 | 1 | | | | |
| 7 | 4WM–83519–00 | .BRACKET, METER | 1 | 1 | | | | |
| 8 | 5EL–8357E–00 | .CLAMP | 1 | 1 | | | | |
| 9 | 97707–40010 | .SCREW, TAPPING | 1 | 1 | | | | |
| 10 | 98502–05020 | SCREW, PAN HEAD | 3 | 3 | | | | |
| 11 | 90201–05036 | WASHER, PLATE | 3 | 3 | | | | |
| 12 | 4WM–83513–00 | DAMPER | 3 | 3 | | | | |
| 13 | 90387–050T5 | COLLAR | 3 | 3 | | | | |
| 14 | 90183–050A6 | NUT, SPRING | 3 | 3 | | | | |
| 15 | 5S7–83559–00 | COVER, METER | 1 | 1 | | | | |
| 16 | 5S7–24216–00 | STAY | 1 | 1 | | | | |
| 17 | 90480–15235 | GROMMET | 2 | 2 | | | | |
| 18 | 97702–50014 | SCREW, TAPPING | 2 | 2 | | | | |
| 19 | 90111–05007 | BOLT,HEX. SOCKET BUTTON | 1 | 1 | | | | |
| 20 | 90179–05523 | NUT | 1 | 1 | | | | |

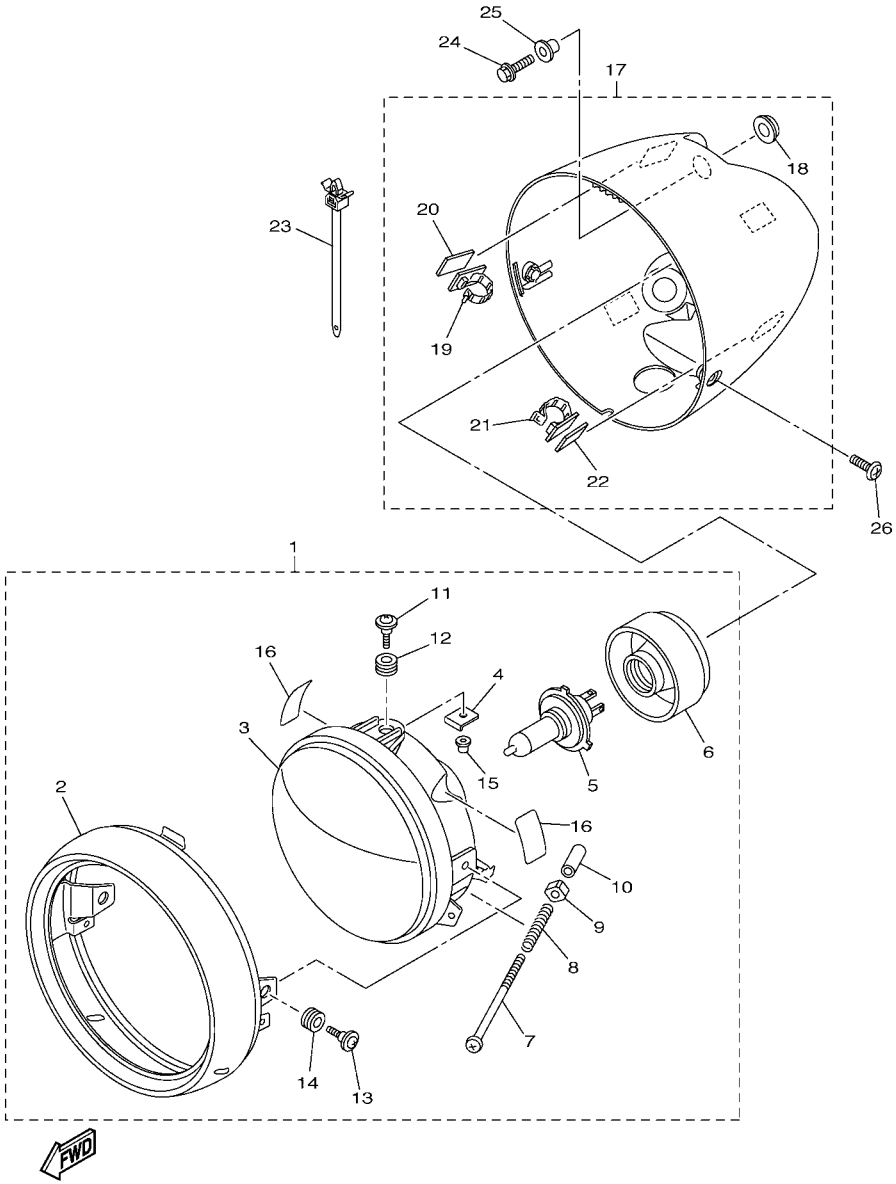


5S71110-H380

## FIG. 38 HEADLIGHT

| REF. NO. | PART NO. | DESCRIPTION | 5S71 | 5S72 | | | | REMARKS |
|---|---|---|---|---|---|---|---|---|
| 1 | 5S7–84310–00 | HEADLIGHT UNIT ASSY | 1 | 1 | | | | |
| 2 | 5S7–84315–00 | .RIM, HEADLIGHT | 1 | 1 | | | | |
| 3 | 5PX–84320–00 | .LENS ASSY | 1 | 1 | | | | |
| 4 | 5PX–84318–00 | .STAY, HEADLIGHT 1 | 1 | 1 | | | | |
| 5 | 8G9–84314–00 | .BULB (12V-60/55W) | 1 | 1 | | | | (H4)HALOGEN |
| 6 | 5PX–84397–00 | .COVER, SOCKET | 1 | 1 | | | | |
| 7 | 5PX–84331–00 | .SCREW, RIM ADJUSTING | 2 | 2 | | | | |
| 8 | 5PX–84332–00 | .SPRING, SCREW | 2 | 2 | | | | |
| 9 | 5PX–84334–00 | .NUT, ADJUSTING | 2 | 2 | | | | |
| 10 | 5PX–84385–00 | .CAP,1 | 2 | 2 | | | | |
| 11 | 5PX–84325–00 | .SCREW, RIM FITTING | 2 | 2 | | | | |
| 12 | 5PX–84354–00 | .GROMMET | 2 | 2 | | | | |
| 13 | 5PX–84125–00 | .SCREW, RIM FITTING | 2 | 2 | | | | |
| 14 | 5PX–84352–00 | .GROMMET | 2 | 2 | | | | |
| 15 | 5PX–84317–00 | .NUT | 4 | 4 | | | | |
| 16 | 5PX–21669–01 | .SEAL | 2 | 2 | | | | |
| 17 | 5S7–84330–00–P1 | BODY ASSY | 1 | 1 | | | | UR FOR DRMK |
| | 5S7–84330–00–P2 | BODY ASSY | 1 | 1 | | | | UR FOR PBM7 |
| 18 | 42X–84366–00 | .DAMPER, HEADLIGHT 1 | 3 | 3 | | | | |
| 19 | 90464–20020 | .CLAMP | 2 | 2 | | | | |
| 20 | 5S7–28307–00 | .SEAL | 2 | 2 | | | | |
| 21 | 90464–17002 | .CLAMP | 2 | 2 | | | | |
| 22 | 5S7–28428–00 | .SEAL 1 | 2 | 2 | | | | |
| 23 | 90465–13M76 | CLAMP | 1 | 1 | | | | |
| 24 | 95022–06025 | BOLT, FLANGE | 3 | 3 | | | | |
| 25 | 90387–06175 | COLLAR | 3 | 3 | | | | |
| 26 | 98980–05014 | SCREW, BIND | 2 | 2 | | | | |

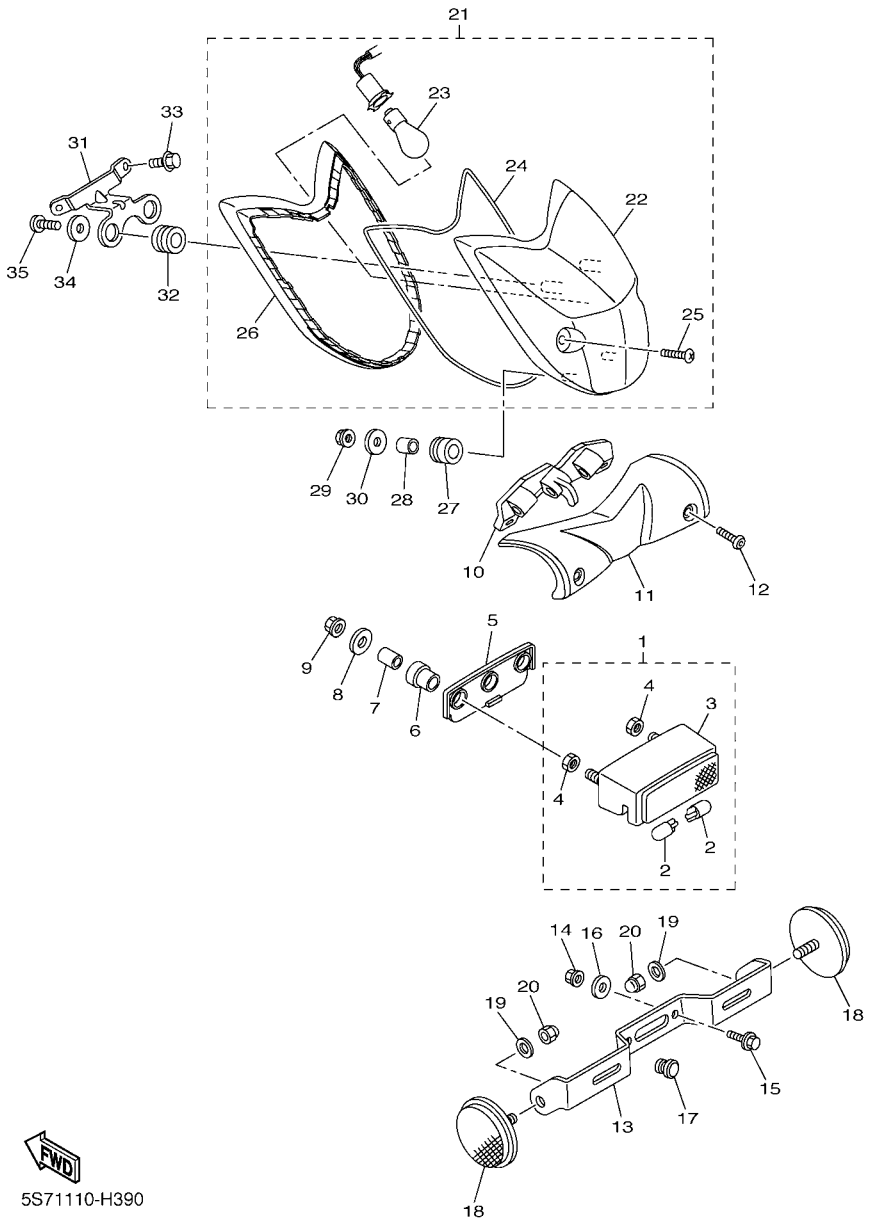


## FIG. 39 TAILLIGHT

| REF. NO. | PART NO. | DESCRIPTION | 5S71 | 5S72 | | | | REMARKS |
|---|---|---|---|---|---|---|---|---|
| 1 | 5C7–84745–00 | LICENCE LIGHT UNIT ASSY | 1 | 1 | | | | |
| 2 | 5PX–84744–00 | .BULB (12V-2CP) | 2 | 2 | | | | |
| 3 | 5PX–84749–00 | .BODY, LICENCE LIGHT | 1 | 1 | | | | |
| 4 | 5PX–84748–00 | .NUT, SPECIAL | 2 | 2 | | | | |
| 5 | 5PX–84742–00 | SEAT, BASE | 1 | 1 | | | | |
| 6 | 3F9–84553–00 | DAMPER | 2 | 2 | | | | |
| 7 | 90387–06251 | COLLAR | 2 | 2 | | | | |
| 8 | 90201–05025 | WASHER, PLATE | 2 | 2 | | | | |
| 9 | 95702–05500 | NUT, WITH WASHER | 2 | 2 | | | | |
| 10 | 5S7–82522–00 | CLAMP, COUPLER | 1 | 1 | | | | |
| 11 | 5S7–2163A–00 | COVER, REAR FENDER 1 | 1 | 1 | | | | |
| 12 | 90111–06054 | BOLT,HEX. SOCKET BUTTON | 2 | 2 | | | | |
| 13 | 5S7–84751–00 | BRACKET, LICENSE | 1 | 1 | | | | |
| 14 | 95602–06100 | NUT, U | 2 | 2 | | | | |
| 15 | 95022–06014 | BOLT, FLANGE | 2 | 2 | | | | |
| 16 | 90201–06380 | WASHER, PLATE | 2 | 2 | | | | |
| 17 | 90338–07010 | PLUG | 1 | 1 | | | | |
| 18 | 449–85131–02 | REFLECTOR, REAR 1 | 2 | 2 | | | | |
| 19 | 90201–051K1 | WASHER, PLATE | 2 | 2 | | | | |
| 20 | 90176–05004 | NUT, CROWN | 2 | 2 | | | | |
| 21 | 5S7–84700–00 | TAILLIGHT ASSY | 1 | 1 | | | | |
| 22 | 5S7–84721–00 | .LENS, TAILLIGHT | 1 | 1 | | | | |
| 23 | 1A2–84714–41 | .BULB (12V-21/5W) | 1 | 1 | | | | |
| 24 | 5S7–84723–00 | .GASKET, TAIL LENS | 1 | 1 | | | | |
| 25 | 3D8–84726–00 | .SCREW | 2 | 2 | | | | |
| 26 | 5S7–84736–00 | .DAMPER, TAIL 1 | 1 | 1 | | | | |
| 27 | 90480–14016 | GROMMET | 2 | 2 | | | | |

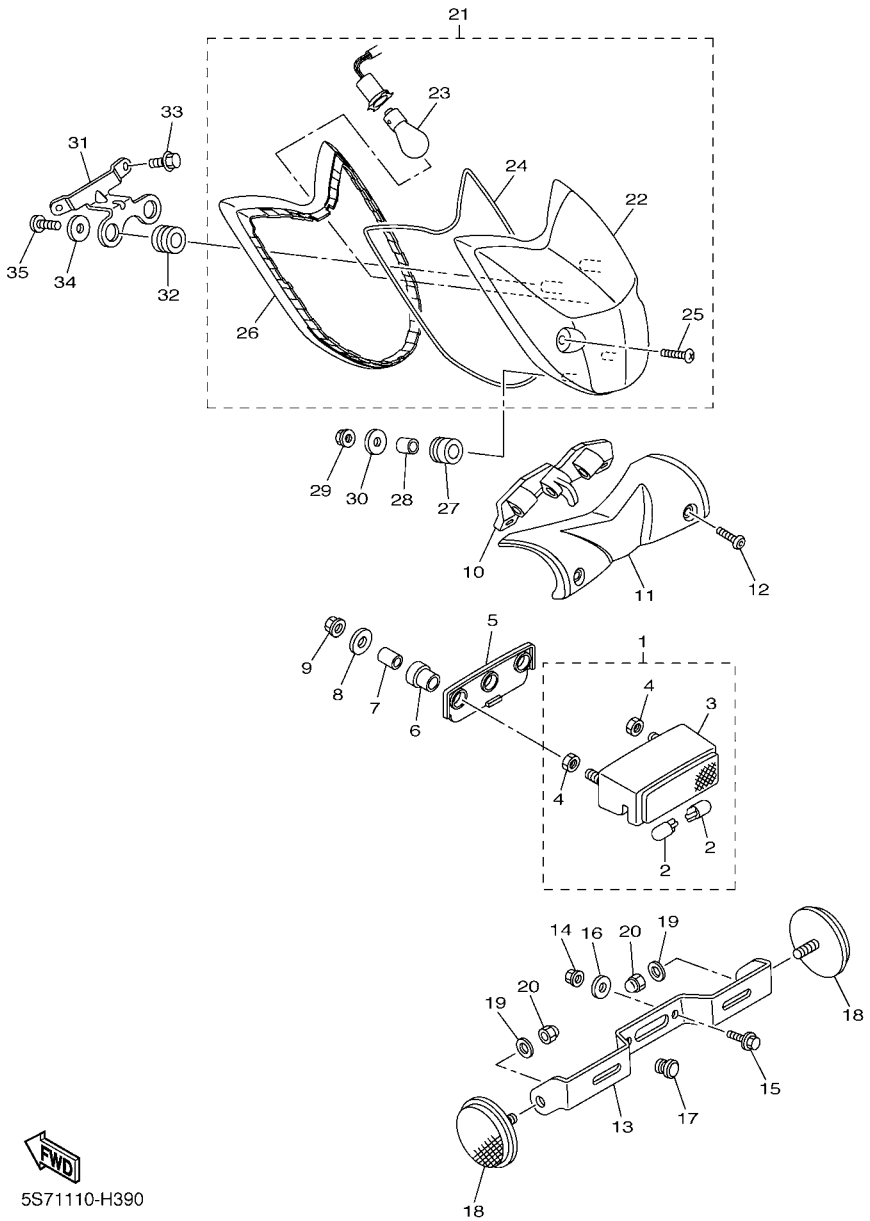


## FIG. 39 TAILLIGHT

| REF. NO. | PART NO. | DESCRIPTION | 5S71 | 5S72 | | | | REMARKS |
|---|---|---|---|---|---|---|---|---|
| 28 | 90387–064M9 | COLLAR | 2 | 2 | | | | |
| 29 | 95302–06600 | NUT | 2 | 2 | | | | |
| 30 | 90201–06095 | WASHER, PLATE | 2 | 2 | | | | |
| 31 | 5S7–84702–00 | BRACKET, TAILLIGHT | 1 | 1 | | | | |
| 32 | 90480–14004 | GROMMET | 2 | 2 | | | | |
| 33 | 90105–06085 | BOLT, FLANGE | 2 | 2 | | | | |
| 34 | 90201–05032 | WASHER, PLATE | 2 | 2 | | | | |
| 35 | 97707–50016 | SCREW, TRUSS HEAD TAPPING | 2 | 2 | | | | |

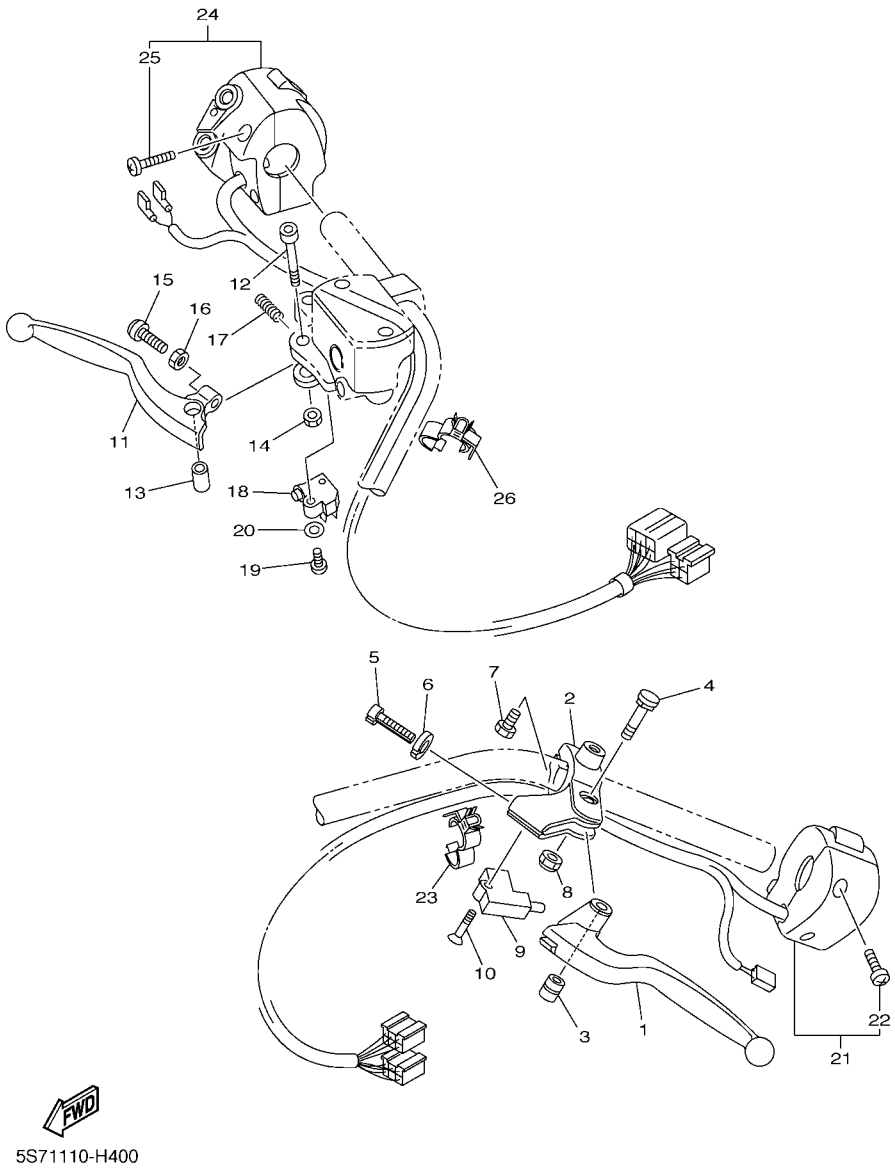


5S71110-H400

## FIG. 40 HANDLE SWITCH & LEVER

| REF. NO. | PART NO. | DESCRIPTION | 5S71 | 5S72 | | | | REMARKS |
|---|---|---|---|---|---|---|---|---|
| 1 | 5BN–83912–00 | LEVER 1 | 1 | 1 | | | | |
| 2 | 5BN–82911–20 | HOLDER, LEVER 1 | 1 | 1 | | | | |
| 3 | 4TR–83913–00 | COLLAR, LEVER 1 | 1 | 1 | | | | |
| 4 | 4TR–83945–10 | BOLT, LEVER | 1 | 1 | | | | |
| 5 | 90123–08083 | BOLT | 1 | 1 | | | | |
| 6 | 90179–08316 | NUT | 1 | 1 | | | | |
| 7 | 97007–06020 | BOLT | 1 | 1 | | | | |
| 8 | 95607–06100 | NUT, U | 1 | 1 | | | | |
| 9 | 3YX–82917–01 | SWITCH | 1 | 1 | | | | |
| 10 | 98707–03020 | SCREW, FLAT HEAD | 1 | 1 | | | | |
| 11 | 5S7–83922–00 | LEVER 2 | 1 | 1 | | | | |
| 12 | 90110–06265 | BOLT, HEXAGON SOCKET HEAD | 1 | 1 | | | | |
| 13 | 36Y–83913–01 | COLLAR, LEVER 1 | 1 | 1 | | | | |
| 14 | 95602–06100 | NUT, U | 1 | 1 | | | | |
| 15 | 90154–06028 | SCREW, BINDING | 1 | 1 | | | | |
| 16 | 90170–06020 | NUT | 1 | 1 | | | | |
| 17 | 90501–10312 | SPRING, COMPRESSION | 1 | 1 | | | | |
| 18 | 36Y–83980–01 | FRONT STOP SWITCH ASSY | 1 | 1 | | | | |
| 19 | 98502–04016 | SCREW, PAN HEAD | 1 | 1 | | | | |
| 20 | 92902–04600 | WASHER, PLATE | 1 | 1 | | | | |
| 21 | 5S7–83973–00 | SWITCH, HANDLE 3 | 1 | 1 | | | | |
| 22 | 98507–05030 | .SCREW, PAN HEAD | 2 | 2 | | | | |
| 23 | 90464–15192 | CLAMP | 2 | 2 | | | | |
| 24 | 5S7–83972–00 | SWITCH, HANDLE 4 | 1 | 1 | | | | |
| 25 | 98507–05030 | .SCREW, PAN HEAD | 2 | 2 | | | | |
| 26 | 90464–15192 | CLAMP | 2 | 2 | | | | |

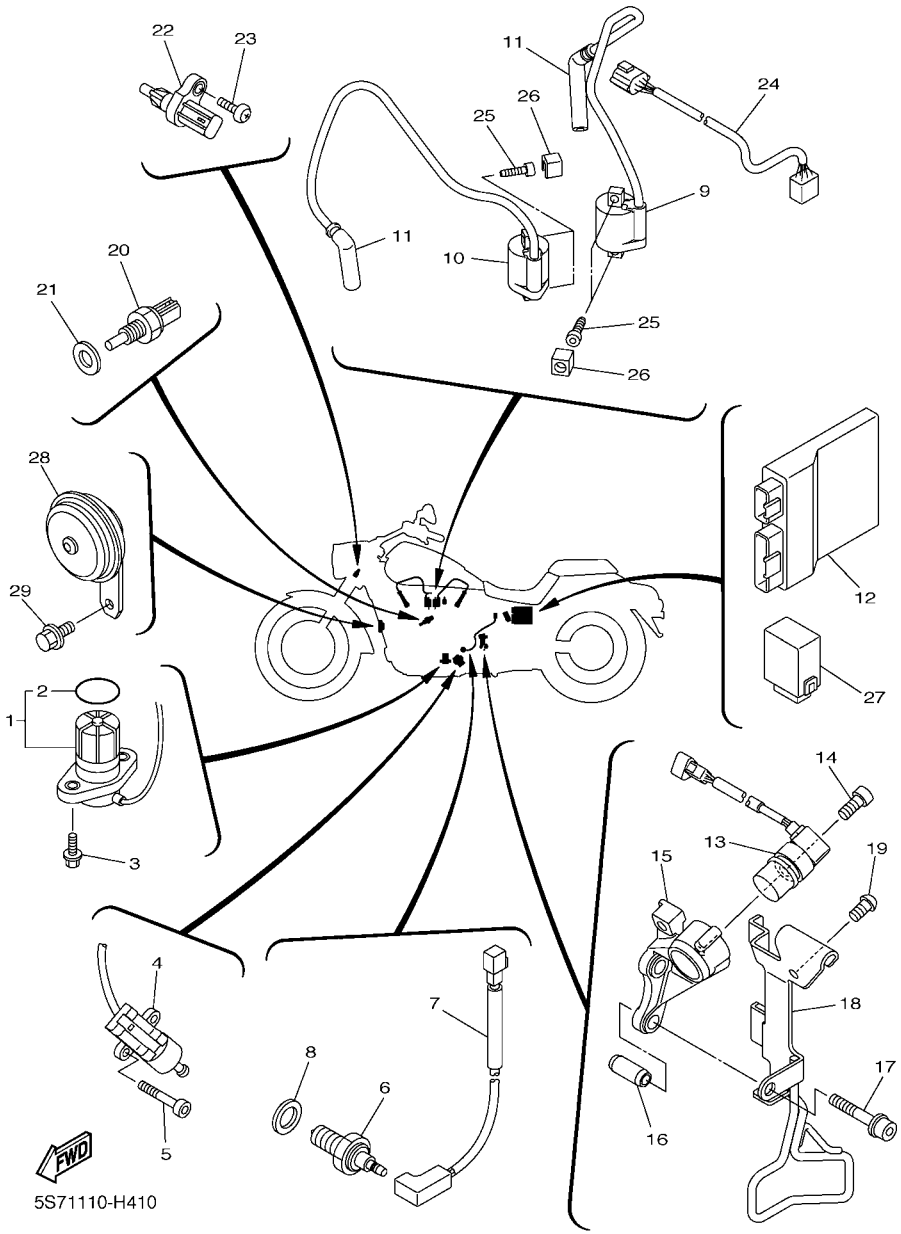


## FIG. 41 ELECTRICAL 1

| REF. NO. | PART NO. | DESCRIPTION | 5S71 | 5S72 | | | | REMARKS |
|---|---|---|---|---|---|---|---|---|
| 1 | 5VY–85720–00 | OIL LEVEL GAUGE ASSY | 1 | 1 | | | | |
| 2 | 5VY–8A8E0–00 | .O-RING | 1 | 1 | | | | |
| 3 | 95022–06016 | BOLT, FLANGE | 2 | 2 | | | | |
| 4 | 3D8–82566–70 | SWITCH, SIDE STAND | 1 | 1 | | | | |
| 5 | 90110–05217 | BOLT, HEXAGON SOCKET HEAD | 2 | 2 | | | | |
| 6 | 3GB–82540–01 | NEUTRAL SWITCH ASSY | 1 | 1 | | | | |
| 7 | 5S7–82509–10 | WIRE, SUB LEAD | 1 | 1 | | | | |
| 8 | 90430–10148 | GASKET | 1 | 1 | | | | |
| 9 | 5S7–82310–00 | IGNITION COIL ASSY | 1 | 1 | | | | |
| 10 | 1D7–82310–10 | IGNITION COIL ASSY | 1 | 1 | | | | |
| 11 | 5S7–82370–00 | PLUG CAP ASSY | 2 | 2 | | | | |
| 12 | 5S7–8591A–00 | ENGINE CONTROL UNIT ASSY | 1 | 1 | | | | |
| 13 | 5S7–83755–00 | SENSOR, SPEED | 1 | 1 | | | | |
| 14 | 90110–06168 | BOLT, HEXAGON SOCKET HEAD | 1 | 1 | | | | |
| 15 | 5S7–81948–00 | BRACKET | 1 | 1 | | | | |
| 16 | 99530–08012 | PIN, DOWEL | 2 | 2 | | | | |
| 17 | 90110–06300 | BOLT, HEXAGON SOCKET HEAD | 2 | 2 | | | | |
| 18 | 5S7–81845–01 | PLATE | 1 | 1 | | | | |
| 19 | 90149–06040 | SCREW | 1 | 1 | | | | |
| 20 | 4P9–83591–00 | THERMO UNIT | 1 | 1 | | | | |
| 21 | 90201–10128 | WASHER, PLATE | 1 | 1 | | | | |
| 22 | 5YU–85886–00 | SENSOR, AIR TEMPERATURE | 1 | 1 | | | | |
| 23 | 98502–05012 | SCREW, PAN HEAD | 1 | 1 | | | | |
| 24 | 5S7–82509–00 | WIRE, SUB LEAD | 1 | 1 | | | | |
| 25 | 91380–06016 | BOLT | 4 | 4 | | | | |
| 26 | 5S7–21399–00 | CAP | 4 | 4 | | | | |
| 27 | 5S7–83350–00 | FLASHER RELAY ASSY | 1 | 1 | | | | |

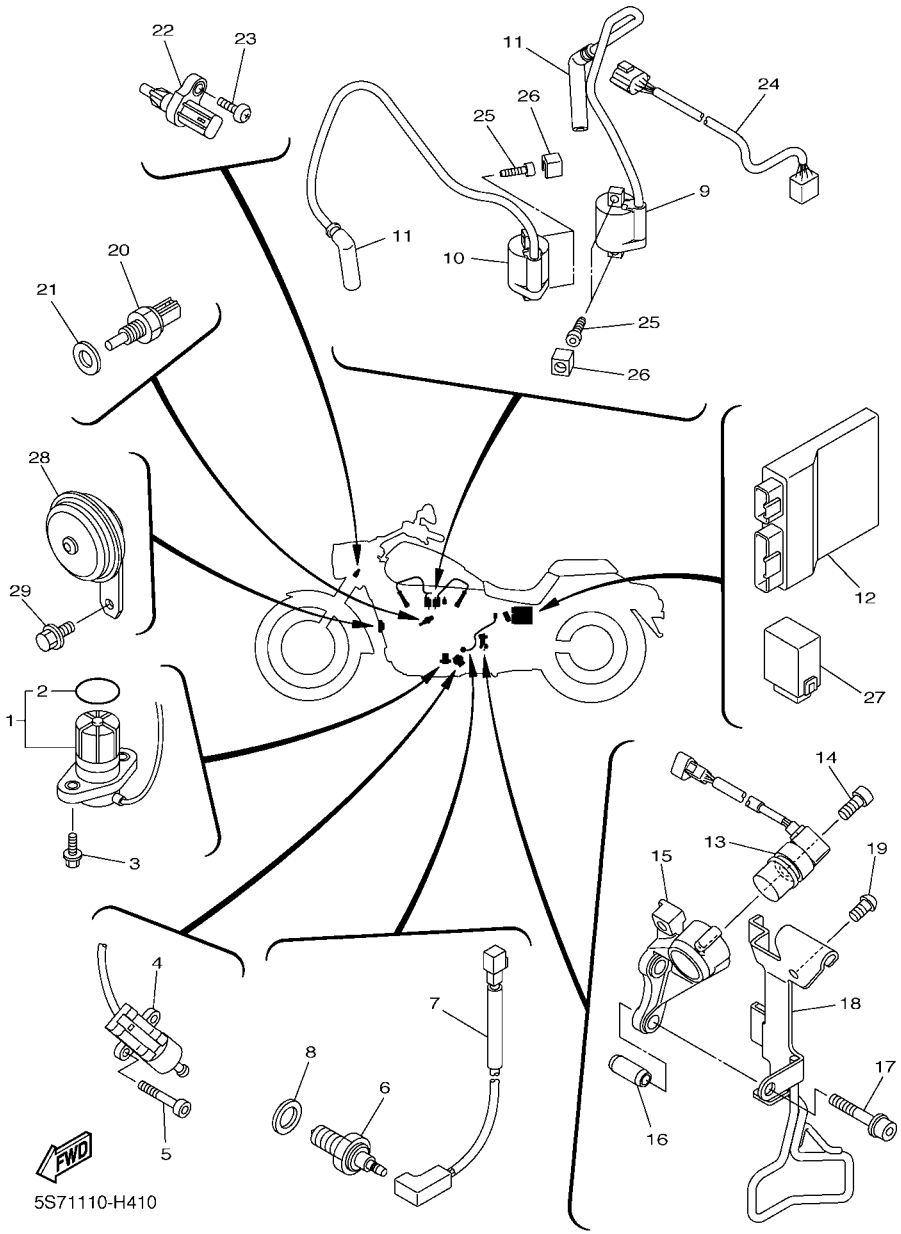


## FIG. 41 ELECTRICAL 1

| REF. NO. | PART NO. | DESCRIPTION | 5S71 | 5S72 | | | | REMARKS |
|---|---|---|---|---|---|---|---|---|
| 28 | 3D8–83371–00 | HORN | 1 | 1 | | | | |
| 29 | 90105–082A5 | BOLT, FLANGE | 1 | 1 | | | | |

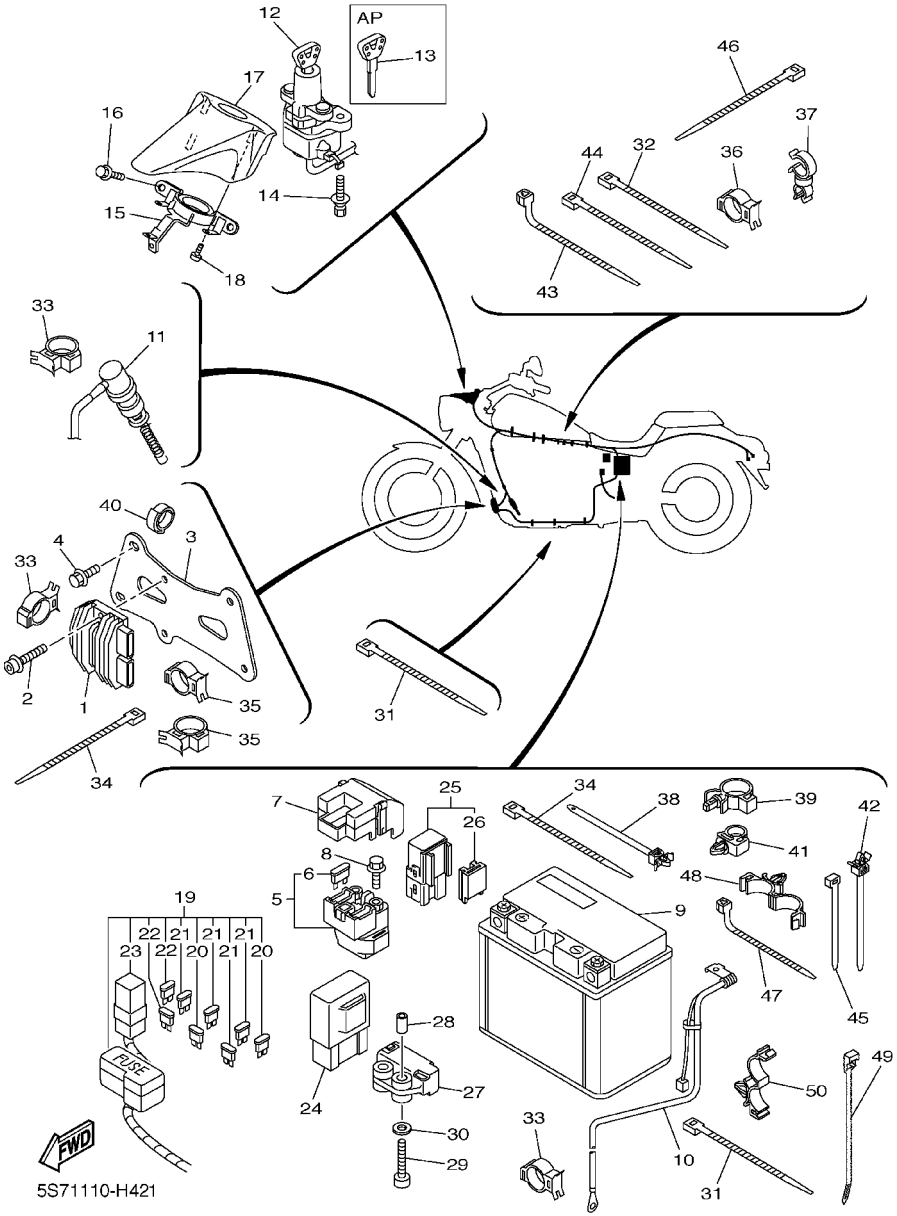


## FIG. 42 ELECTRICAL 2

| REF. NO. | PART NO. | DESCRIPTION | 5S71 | 5S72 | | | | REMARKS |
|---|---|---|---|---|---|---|---|---|
| 1 | 1D7–81960–00 | RECTIFIER & REGULATOR ASSY | 1 | 1 | | | | |
| 2 | 90110–06263 | BOLT, HEXAGON SOCKET HEAD | 2 | 2 | | | | |
| 3 | 5S7–2128A–00 | BRACKET, REGULATOR | 1 | 1 | | | | |
| 4 | 90105–08021 | BOLT, FLANGE | 4 | 4 | | | | |
| 5 | 5S7–81940–00 | STARTER RELAY ASSY | 1 | 1 | | | | |
| 6 | 42X–82151–00 | .FUSE (10A-BL) | 2 | 2 | | | | |
| 7 | 5SL–82119–10 | COVER, LEAD WIRE | 1 | 1 | | | | |
| 8 | 95022–06008 | BOLT, FLANGE | 2 | 2 | | | | |
| 9 | 2D1–82100–00 | BATTERY ASSY(GS YUASA YTZ14S) | 1 | 1 | | | | |
| 10 | 5S7–82116–00 | WIRE, MINUS LEAD | 1 | 1 | | | | |
| 11 | 5S7–82530–00 | STOP SWITCH ASSY | 1 | 1 | | | | |
| 12 | 3D8–82501–00 | MAIN SWITCH STEERING LOCK | 1 | 1 | | | | |
| 13 | 4BH–82511–09 | BLANK KEY | 1 | 1 | | | | AP |
| 14 | 90109–080G5 | BOLT | 2 | 2 | | | | |
| 15 | 5S7–2334G–00 | BRACKET 1 | 1 | 1 | | | | |
| 16 | 90105–06063 | BOLT, FLANGE | 2 | 2 | | | | |
| 17 | 5S7–82568–00 | COVER, MAIN SWITCH | 1 | 1 | | | | |
| 18 | 97702–40016 | SCREW, TAPPING | 3 | 3 | | | | |
| 19 | 5S7–82590–00 | WIRE HARNESS ASSY | 1 | 1 | | | | |
| 20 | 5JJ–82151–10 | .FUSE (15A-BL) | 2 | 2 | | | | |
| 21 | 5JJ–82151–30 | .FUSE (10A-BL) | 4 | 4 | | | | |
| 22 | 5JJ–82151–20 | .FUSE (20A-BL) | 2 | 2 | | | | |
| 23 | 5PS–82151–00 | .FUSE (40A) | 1 | 1 | | | | |
| 24 | 5VK–81950–30 | RELAY ASSY | 1 | 1 | | | | |
| 25 | 5EA–81950–20 | RELAY ASSY | 1 | 1 | | | | |
| 26 | 5EA–81952–00 | .HOLDER, RELAY | 1 | 1 | | | | |
| 27 | 5VU–82576–01 | LEAN ANGLE SENSOR | 1 | 1 | | | | |

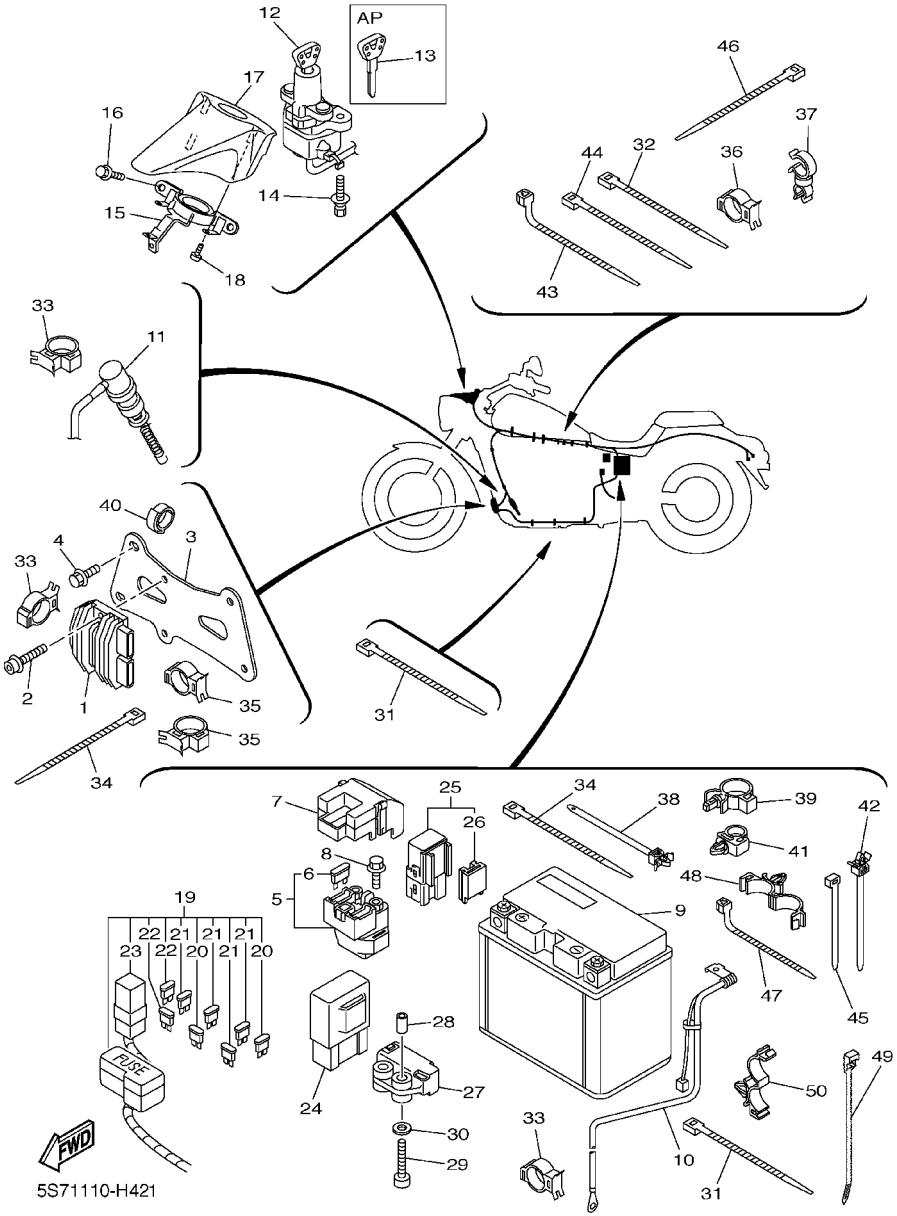


## FIG. 42 ELECTRICAL 2

| REF. NO. | PART NO. | DESCRIPTION | 5S71 | 5S72 | | | | REMARKS |
|---|---|---|---|---|---|---|---|---|
| 28 | 90445–057G5 | HOSE (L10) | 1 | 1 | | | | |
| 29 | 90110–04003 | BOLT, HEXAGON SOCKET HEAD | 2 | 2 | | | | |
| 30 | 90201–04027 | WASHER, PLATE | 2 | 2 | | | | |
| 31 | 1UA–82591–00 | BAND | 9 | 9 | | | | |
| 32 | 90464–32060 | CLAMP | 2 | 2 | | | | |
| 33 | 90464–10190 | CLAMP | 3 | 3 | | | | |
| 34 | 3MA–82591–00 | BAND | 3 | 3 | | | | |
| 35 | 90464–20191 | CLAMP | 2 | 2 | | | | |
| 36 | 90464–25217 | CLAMP | 1 | 1 | | | | |
| 37 | 90464–20004 | CLAMP | 1 | 1 | | | | |
| 38 | 90464–12036 | CLAMP | 1 | 1 | | | | |
| 39 | 90464–16012 | CLAMP | 2 | 2 | | | | |
| 40 | 90464–16003 | CLAMP | 1 | 1 | | | | |
| 41 | 90464–10008 | CLAMP | 1 | 1 | | | | |
| 42 | 90464–12089 | CLAMP | 1 | 1 | | | | |
| 43 | 90464–15195 | CLAMP | 1 | 1 | | | | |
| 44 | 90460–15126 | CLAMP, HOSE | 1 | 1 | | | | |
| 45 | 90465–10098 | CLAMP | 2 | 2 | | | | |
| 46 | 90465–13M39 | CLAMP | 1 | 1 | | | | |
| 47 | 90464–13073 | CLAMP | 1 | 1 | | | | |
| 48 | 90464–18007 | CLAMP | 2 | 2 | | | | |
| 49 | 90464–99006 | CLAMP | 1 | 1 | | | | *1 |
| 50 | 90464–16012 | CLAMP | 1 | 1 | | | | *2 |

*1 5S71:To VN01E-001786 5S72:To VN01Y-000161
*2 5S71:From VN01E-001787 5S72:From VN01Y-000162

| PART NO. | REF. NO. |
|---|---|
| 5S7–11101–00 | 1 – 1 |
| 5S7–11101–10 | 1 – 6 |
| 5S7–1111F–00 | 1 – 33 |
| 5S7–1111M–00 | 1 – 21 |
| 5S7–1111N–00 | 1 – 22 |
| 5S7–1111P–00 | 1 – 27 |
| 5S7–1111R–00 | 1 – 28 |
| 5S7–1112F–00 | 1 – 29 |
| 4G0–11133–11 | 1 – 2 |
| | 1 – 7 |
| 5S7–1113F–00 | 1 – 30 |
| 5S7–1113J–00 | 9 – 16 |
| 5S7–11166–00 | 9 – 15 |
| 5S7–11181–00 | 1 – 12 |
| 5S7–11185–00 | 1 – 35 |
| 5S7–11186–00 | 1 – 17 |
| 5S7–11195–00 | 1 – 36 |
| 5S7–11196–00 | 1 – 19 |
| 214–11198–01 | 6 – 15 |
| 5S7–11311–00 | 2 – 1 |
| | 2 – 5 |
| 5S7–11351–00 | 2 – 9 |
| 5S7–11352–00 | 2 – 10 |
| 5S7–11411–00 | 3 – 1 |
| 5S7–11603–00 | 3 – 6 |
| 5S7–11631–01 | 3 – 5 |
| 5PS–11633–00 | 3 – 8 |
| 5S7–11650–00 | 3 – 2 |
| 5YU–11654–00 | 3 – 3 |
| 5YU–11656–10 | 3 – 4 |
| 5YU–11656–20 | 3 – 4 |
| 5YU–11656–30 | 3 – 4 |
| 5S7–12111–00 | 4 – 1 |
| 5S7–12113–00 | 4 – 3 |
| 3YF–12116–00 | 4 – 4 |
| 3YF–12117–01 | 4 – 6 |
| 4G0–12118–00 | 4 – 7 |
| 5H0–12119–00 | 4 – 5 |
| 5S7–12121–00 | 4 – 2 |
| 5S7–12146–00 | 4 – 10 |
| 5S7–12151–00 | 4 – 8 |
| 5S7–12156–00 | 4 – 11 |
| 4X7–12159–00 | 4 – 12 |
| 5S7–12161–00 | 4 – 9 |
| 5S7–12170–00 | 5 – 1 |
| 5S7–12176–00 | 5 – 3 |
| 5S7–12180–00 | 5 – 2 |
| 31G–12210–01 | 5 – 11 |

| PART NO. | REF. NO. |
|---|---|
| 3GD–12213–00 | 5 – 14 |
| 31G–12214–00 | 5 – 12 |
| 5S7–12214–00 | 2 – 3 |
| | 2 – 7 |
| 5S7–12215–00 | 2 – 2 |
| | 2 – 6 |
| 31G–12222–00 | 5 – 13 |
| 5S7–12231–00 | 5 – 8 |
| 3D8–12241–00 | 5 – 9 |
| 6S5–12594–00 | 9 – 17 |
| 5S7–13171–00 | 6 – 10 |
| 5S7–13300–00 | 6 – 1 |
| 3D8–13354–10 | 14 – 28 |
| 3D8–13355–00 | 6 – 2 |
| 3D8–13416–00 | 6 – 7 |
| 5GH–13440–20 | 7 – 4 |
| 3D8–13490–00 | 7 – 1 |
| 8FP–13556–00 | 8 – 12 |
| 5S7–13586–00 | 8 – 14 |
| 5S7–13590–00 | 8 – 1 |
| 5S7–13750–00 | 8 – 17 |
| 5S7–13750–10 | 8 – 17 |
| 5S7–13761–00 | 8 – 2 |
| 5S7–13895–00 | 8 – 25 |
| 5S7–13906–00 | 8 – 10 |
| 5S7–13907–00 | 24 – 14 |
| 5S7–13926–00 | 8 – 8 |
| 5S7–13971–00 | 24 – 17 |
| 3D8–14104–00 | 8 – 20 |
| 8A7–14139–00 | 8 – 22 |
| 5PS–14147–00 | 8 – 3 |
| 5S7–14148–00 | 8 – 30 |
| 895–14169–00 | 8 – 21 |
| 5S7–14348–00 | 8 – 5 |
| 5S7–14349–00 | 8 – 4 |
| 5S7–14411–00 | 9 – 1 |
| 3D8–14421–00 | 9 – 7 |
| 3D8–14451–00 | 9 – 8 |
| 4GA–14452–00 | 9 – 2 |
| 3D8–14457–00 | 9 – 3 |
| 3D8–14462–00 | 9 – 4 |
| 3D8–14467–00 | 8 – 23 |
| 3D8–14498–01 | 9 – 11 |
| 5S7–14610–00 | 10 – 1 |
| 3EG–14613–00 | 10 – 12 |
| 5S7–14615–00 | 10 – 21 |
| 5S7–14624–00 | 10 – 24 |
| 5S7–14649–00 | 10 – 27 |

| PART NO. | REF. NO. |
|---|---|
| 5S7–1468W–00 | 10 – 25 |
| 5S7–14710–00 | 10 – 13 |
| 5S7–14715–00 | 10 – 18 |
| 5S7–14718–00 | 10 – 2 |
| 5S7–14728–00 | 10 – 3 |
| 5S7–14738–00 | 10 – 8 |
| 5VY–14747–00 | 10 – 28 |
| 5S7–14748–00 | 10 – 7 |
| 5YU–14755–00 | 10 – 15 |
| 5S7–14772–00 | 10 – 14 |
| 5S7–15100–00 | 11 – 1 |
| 5S7–15113–00 | 12 – 48 |
| 2H7–15138–00 | 11 – 4 |
| 3D8–15154–00 | 11 – 2 |
| 5S7–15316–00 | 12 – 49 |
| 3D8–15337–02 | 12 – 35 |
| 3D8–15353–00 | 11 – 13 |
| 3D8–15358–00 | 11 – 12 |
| 5S7–15362–00 | 12 – 9 |
| 3D8–15368–00 | 11 – 15 |
| 3D8–15381–00 | 15 – 29 |
| 3D8–15388–00 | 12 – 15 |
| 5S7–15411–00 | 12 – 1 |
| 5S7–15415–00 | 12 – 31 |
| 3D8–1541A–01 | 12 – 34 |
| 5S7–15421–00 | 12 – 14 |
| 3D8–15423–01 | 12 – 23 |
| 5S7–15426–00 | 12 – 38 |
| 3D8–1542A–01 | 12 – 11 |
| 3D8–15441–00 | 12 – 33 |
| 3D8–15451–00 | 12 – 2 |
| 3D8–15461–00 | 12 – 18 |
| 5S7–15470–00 | 12 – 47 |
| 5S7–15484–00 | 34 – 3 |
| 3D8–15492–00 | 12 – 12 |
| 5S7–15499–00 | 12 – 45 |
| 3D8–15512–00 | 13 – 8 |
| 5S7–15512–00 | 13 – 5 |
| 5S7–15515–00 | 13 – 1 |
| 1D7–15521–00 | 13 – 6 |
| 4WM–15522–00 | 13 – 9 |
| 3D8–15544–00 | 12 – 44 |
| 5S7–15561–00 | 13 – 2 |
| 3LD–15590–02 | 13 – 3 |
| 5S7–15789–00 | 12 – 46 |
| 5S7–16111–00 | 14 – 1 |
| 5S7–16150–00 | 14 – 6 |
| 5YU–16154–00 | 14 – 7 |

| PART NO. | REF. NO. |
|---|---|
| 3D8–16164–10 | 14 – 19 |
| 3D8–16181–00 | 14 – 3 |
| 4WM–16193–00 | 14 – 2 |
| 5JW–16321–10 | 14 – 10 |
| 341–16321–20 | 14 – 9 |
| 2H7–16325–00 | 14 – 11 |
| 5S7–16334–00 | 14 – 14 |
| 36Y–16335–00 | 14 – 15 |
| 5S7–16340–00 | 14 – 24 |
| 132–16346–00 | 17 – 1 |
| 3D8–16350–00 | 14 – 12 |
| 1TX–16352–00 | 14 – 16 |
| 4XV–16356–01 | 14 – 18 |
| 3D8–16371–00 | 14 – 8 |
| 3D8–16382–00 | 12 – 28 |
| 5S7–17121–00 | 15 – 11 |
| 5S7–17131–00 | 15 – 6 |
| 5S7–17141–00 | 15 – 8 |
| 5S7–17151–00 | 15 – 3 |
| 5S7–17211–00 | 15 – 26 |
| 5S7–17221–00 | 15 – 16 |
| 5S7–17231–00 | 15 – 23 |
| 5S7–17241–00 | 15 – 19 |
| 5S7–17251–00 | 15 – 24 |
| 5S7–17411–00 | 15 – 1 |
| 5S7–17421–00 | 15 – 14 |
| 5S7–17651–00 | 15 – 34 |
| 3D8–18101–00 | 17 – 4 |
| 5S7–18110–00 | 17 – 13 |
| 3D8–18112–01 | 17 – 19 |
| 22N–18113–00 | 17 – 14 |
| 5VN–18113–00 | 17 – 15 |
| 2D1–18115–00 | 17 – 21 |
| 1D7–18127–00 | 17 – 3 |
| 3D8–18140–00 | 17 – 7 |
| 3D8–18175–00 | 17 – 6 |
| 3D8–18511–00 | 16 – 3 |
| 3D8–18512–00 | 16 – 4 |
| 3D8–18531–00 | 16 – 5 |
| 3D8–18535–00 | 16 – 6 |
| 5S7–18540–00 | 16 – 1 |
| 136–18542–00 | 16 – 2 |
| 5S7–21110–01 | 18 – 1 |
| 5S7–21158–00 | 18 – 18 |
| 3D8–2117G–00 | 18 – 20 |
| 5GK–2118K–00 | 24 – 43 |
| 5PX–21268–00 | 18 – 21 |
| 5S7–21280–00 | 18 – 2 |

| PART NO. | REF. NO. |
|---|---|
| 5S7–2128A–00 | 42 – 3 |
| 5S7–21314–00 | 18 – 8 |
| 5S7–21316–00 | 18 – 12 |
| 5S7–21317–00 | 18 – 4 |
| 5S7–21341–00 | 25 – 6 |
| 3D8–21359–00 | 20 – 41 |
| 5S7–21374–00 | 33 – 38 |
| 5S7–21399–00 | 41 – 26 |
| 22F–2139X–00 | 20 – 6 |
| 5YU–2143A–00 | 21 – 51 |
| 5S7–21441–00 | 33 – 8 |
| 5S7–21510–00–P1 | 19 – 1 |
| 5S7–21510–00–P2 | 19 – 1 |
| 1D6–2153E–00 | 19 – 29 |
| 5S7–21587–00 | 19 – 3 |
| 5S7–21588–00 | 19 – 4 |
| 3D8–21597–00 | 19 – 5 |
| 5S7–21629–00–P1 | 19 – 14 |
| 5S7–21629–00–P2 | 19 – 14 |
| 5S7–2162R–00 | 19 – 18 |
| 5S7–21638–00 | 19 – 15 |
| 5S7–21639–00 | 19 – 16 |
| 5S7–2163A–00 | 39 – 11 |
| 5S7–2164F–00 | 19 – 23 |
| 5S7–2164G–00 | 19 – 24 |
| 5S7–2165A–00 | 19 – 11 |
| 5S7–2165A–10 | 19 – 11 |
| 5S7–21668–00 | 21 – 47 |
| 4DN–21669–00 | 19 – 22 |
| 5PX–21669–01 | 19 – 13 |
| | 38 – 16 |
| 5PX–21686–00 | 19 – 31 |
| 5S7–21711–00–P1 | 20 – 8 |
| 5S7–21711–00–P2 | 20 – 8 |
| 5S7–21715–00 | 20 – 13 |
| | 20 – 23 |
| 5S7–21721–00–P1 | 20 – 14 |
| 5S7–21721–00–P2 | 20 – 14 |
| 5S7–2172N–00 | 20 – 20 |
| 5S7–21731–10 | 20 – 30 |
| 19D–21732–00 | 20 – 15 |
| 5S7–21732–00 | 18 – 23 |
| 5S7–21741–00 | 20 – 25 |
| 5S7–2175V–00 | 20 – 34 |
| 5S7–2176P–00 | 19 – 30 |
| 5S7–2177G–00 | 20 – 1 |
| 5S7–21781–00 | 20 – 44 |
| 5S7–21782–00 | 20 – 45 |

| PART NO. | REF. NO. |
|---|---|
| 5S7–2179W–00 | 19 – 30 |
| 5S7–21852–00 | 20 – 9 |
| 5S7–22110–00 | 21 – 1 |
| 3D8–22124–00 | 21 – 7 |
| 5EL–22129–00 | 21 – 8 |
| 3D8–2213J–00 | 21 – 33 |
| 3D8–22141–01 | 21 – 2 |
| 3D8–2217A–00 | 21 – 10 |
| 3D8–2217M–00 | 21 – 25 |
| 4KM–2219X–00 | 21 – 5 |
| 5S7–22210–00 | 21 – 48 |
| 5S7–22311–00 | 21 – 29 |
| 3D8–22312–00 | 21 – 41 |
| 5S7–22341–00 | 21 – 44 |
| 5S7–23102–01 | 23 – 1 |
| 5S7–23103–01 | 23 – 19 |
| 3D8–23110–00 | 23 – 3 |
| | 23 – 21 |
| 1D0–23111–00 | 23 – 17 |
| | 23 – 35 |
| 5EL–23118–00 | 23 – 16 |
| | 23 – 34 |
| 3D8–23121–00 | 23 – 43 |
| 3D8–23122–00 | 36 – 19 |
| 3D8–23123–00 | 23 – 42 |
| 4KM–23123–01 | 22 – 1 |
| 4FM–23125–40 | 23 – 6 |
| | 23 – 24 |
| 5S7–23126–00 | 23 – 2 |
| 5S7–23136–00 | 23 – 20 |
| 5S7–23141–00 | 23 – 14 |
| | 23 – 32 |
| 4EB–23144–00 | 23 – 10 |
| | 23 – 28 |
| 4EB–23145–01 | 23 – 8 |
| | 23 – 26 |
| 36Y–23146–10 | 23 – 7 |
| | 23 – 25 |
| 4DW–23149–40 | 23 – 15 |
| | 23 – 33 |
| 26H–23156–00 | 23 – 9 |
| | 23 – 27 |
| 509–23158–L0 | 23 – 12 |
| | 23 – 30 |
| 3D8–23163–00 | 23 – 44 |
| 5S7–23170–00 | 23 – 5 |
| | 23 – 23 |
| 5BN–23171–00 | 23 – 4 |

| PART NO. | REF. NO. |
|---|---|
| 5BN–23171–00 | 23 – 22 |
| 4YR–23173–00 | 23 – 11 |
| | 23 – 29 |
| 5S7–23174–00 | 36 – 1 |
| 278–23181–50 | 23 – 13 |
| | 23 – 31 |
| 43F–23188–10 | 23 – 18 |
| | 23 – 36 |
| 5S7–23340–00 | 23 – 41 |
| 5S7–2334G–00 | 42 – 15 |
| 5S7–23389–00 | 22 – 14 |
| 3D8–23394–20 | 23 – 45 |
| 1W1–23416–00 | 22 – 3 |
| 26H–23418–01 | 22 – 6 |
| 4NK–23441–00 | 22 – 16 |
| 5PX–23442–00 | 22 – 11 |
| 3DM–23445–00 | 22 – 12 |
| 3FV–23462–00 | 23 – 40 |
| 4WM–23497–00 | 22 – 23 |
| 5S7–24136–00 | 24 – 21 |
| 5S7–2413Y–00 | 24 – 8 |
| 5S7–24145–00 | 24 – 4 |
| 5EJ–2414H–00 | 20 – 5 |
| 5S7–2416C–00 | 24 – 41 |
| 5PX–24170–00 | 24 – 31 |
| 5S7–2417C–00 | 24 – 42 |
| 5RB–24180–00 | 24 – 20 |
| 3MA–24181–00 | 19 – 28 |
| 5S7–24181–00 | 24 – 6 |
| 1D7–24182–00 | 24 – 7 |
| 4TR–24183–00 | 24 – 9 |
| 4BP–24188–00 | 24 – 3 |
| 5S7–24216–00 | 37 – 16 |
| 5S7–24240–00 | 24 – 2 |
| 5S7–24240–10 | 24 – 2 |
| 5S7–24312–00 | 8 – 11 |
| 5S7–24313–00 | 24 – 18 |
| 3D8–24325–00 | 24 – 36 |
| 68V–24387–00 | 8 – 9 |
| 4KM–24453–00 | 8 – 19 |
| 5VN–24486–00 | 24 – 15 |
| 4NK–24602–12 | 24 – 5 |
| 4BP–24705–00 | 25 – 7 |
| 5S7–2470F–00 | 25 – 2 |
| 5S7–24710–01 | 25 – 1 |
| 4NK–24728–00 | 25 – 3 |
| 22W–24741–00 | 25 – 5 |
| | 25 – 17 |

| PART NO. | REF. NO. |
|---|---|
| 5S7–24750–00 | 25 – 16 |
| 1D7–2475H–00 | 25 – 19 |
| 5S7–2475J–00 | 25 – 11 |
| 5S7–2475N–00 | 25 – 14 |
| 5S7–2475R–00 | 25 – 21 |
| 5S7–2478E–00 | 25 – 10 |
| 4BP–24792–00 | 25 – 8 |
| 5S7–2486A–00 | 24 – 27 |
| 5S7–25168–00–98 | 26 – 1 |
| 5KS–25181–00 | 26 – 9 |
| 3D8–25317–00 | 28 – 6 |
| 5S7–25338–00–98 | 28 – 1 |
| 4WM–25364–00 | 28 – 8 |
| 3D8–25366–00–98 | 28 – 12 |
| 3D8–25376–00 | 28 – 18 |
| 5S7–25381–00 | 28 – 31 |
| 1D7–25383–00 | 28 – 7 |
| 5S7–25388–00 | 28 – 24 |
| 5MT–25398–00 | 26 – 7 |
| | 28 – 11 |
| 5MT–25398–10 | 26 – 7 |
| | 28 – 11 |
| 5MT–25398–20 | 26 – 7 |
| | 28 – 11 |
| 5S7–2539F–00 | 28 – 25 |
| 3D8–25470–00 | 28 – 20 |
| 5S7–2580T–00 | 27 – 3 |
| 3D8–2580W–00 | 29 – 3 |
| 5S7–2581J–00 | 33 – 35 |
| 3P6–2581T–00 | 27 – 1 |
| 47X–25824–01 | 27 – 11 |
| 1D7–25825–00 | 27 – 12 |
| 4BP–2582A–00 | 33 – 16 |
| 3D8–2582W–00 | 29 – 1 |
| 5S7–2583B–00 | 28 – 30 |
| 4BP–2583V–01 | 33 – 14 |
| 3D8–25852–00 | 31 – 3 |
| 2KF–25852–50 | 33 – 28 |
| 3D8–25854–00 | 31 – 5 |
| 360–25854–01 | 33 – 26 |
| 2GU–25855–00 | 33 – 27 |
| 3D8–25855–00 | 31 – 4 |
| 4BP–2585F–00 | 33 – 17 |
| 4L0–25862–01 | 31 – 11 |
| 4TR–25867–10 | 31 – 7 |
| 5S7–25872–00 | 31 – 9 |
| 5S7–2587A–00 | 33 – 41 |
| 3D8–25886–00 | 22 – 19 |

| PART NO. | REF. NO. |
|---|---|
| 3D8–25887–00 | 22 – 21 |
| | 33 – 45 |
| 4NK–25888–00 | 33 – 30 |
| 5S7–2588F–00 | 33 – 43 |
| 31A–25894–10 | 33 – 25 |
| 5S7–25895–00 | 33 – 33 |
| 3D8–2589H–00 | 31 – 6 |
| 5JW–25914–10 | 27 – 6 |
| | 29 – 6 |
| 1D7–25919–00 | 29 – 9 |
| 4BP–25919–00 | 27 – 9 |
| 3YX–25929–00 | 27 – 10 |
| 4TT–25937–00 | 27 – 7 |
| | 29 – 7 |
| 5S7–26111–00 | 30 – 1 |
| 4XY–26240–00 | 30 – 3 |
| 4NK–26241–00 | 30 – 2 |
| 5EL–26246–00 | 30 – 4 |
| 5S7–26279–00 | 18 – 24 |
| 4XY–26280–10 | 30 – 12 |
| 4XY–26290–10 | 30 – 13 |
| 5S7–26311–00 | 30 – 6 |
| 5S7–26312–00 | 30 – 8 |
| 5S7–26335–00 | 30 – 10 |
| 1E6–26342–00 | 30 – 11 |
| 1D7–2639G–00 | 18 – 22 |
| 5S7–26475–00 | 18 – 26 |
| 5S7–27123–00 | 32 – 24 |
| | 32 – 40 |
| 5S7–27211–00 | 33 – 1 |
| 5S7–27216–00 | 33 – 3 |
| 4BP–27222–02 | 33 – 18 |
| 1D7–27285–00 | 33 – 2 |
| 5S7–27311–00 | 32 – 1 |
| 3D8–27315–00 | 32 – 8 |
| 3D8–27321–00 | 32 – 10 |
| 5S7–27322–00 | 32 – 2 |
| 5S7–27410–00 | 32 – 13 |
| 5S7–27413–00 | 32 – 15 |
| 5S7–27414–00 | 32 – 22 |
| | 32 – 38 |
| 5S7–27420–00 | 32 – 29 |
| 5S7–27423–00 | 32 – 31 |
| 5S7–27424–00 | 32 – 23 |
| | 32 – 39 |
| 1D7–27426–00 | 32 – 17 |
| | 32 – 33 |
| 1D7–27427–00 | 32 – 16 |

| PART NO. | REF. NO. |
|---|---|
| 1D7–27427–00 | 32 – 32 |
| 5S7–27430–00 | 32 – 45 |
| 4WM–27431–00 | 32 – 46 |
| | 32 – 53 |
| 5S7–27432–00 | 33 – 7 |
| 4WM–27433–00 | 32 – 47 |
| | 32 – 54 |
| 5S7–27440–00 | 32 – 52 |
| 5S7–27443–00 | 17 – 11 |
| 5S7–27443–10 | 17 – 11 |
| 4NK–27451–10 | 32 – 14 |
| 4NK–27461–10 | 32 – 30 |
| 4WM–27496–00 | 32 – 19 |
| 4WM–27497–00 | 32 – 35 |
| 5S7–2787A–00 | 32 – 21 |
| | 32 – 37 |
| 3D8–28100–00 | 20 – 46 |
| 5S7–28110–00 | 20 – 47 |
| 5S7–28307–00 | 38 – 20 |
| 5S7–28428–00 | 38 – 22 |
| 5S7–46241–00 | 28 – 23 |
| 5S7–81410–00 | 34 – 1 |
| 5S7–81450–00 | 34 – 2 |
| 5S7–81815–00 | 35 – 9 |
| 28P–81826–00 | 35 – 6 |
| 4XV–8182A–00 | 35 – 8 |
| | 35 – 11 |
| 4B5–81840–00 | 35 – 2 |
| 11H–81844–00 | 35 – 5 |
| 5S7–81845–01 | 41 – 18 |
| 1FK–81847–00 | 35 – 4 |
| 3TB–81847–00 | 35 – 3 |
| | 35 – 7 |
| 4B5–81871–00 | 35 – 10 |
| 5S7–81890–00 | 35 – 1 |
| 5S7–81940–00 | 42 – 5 |
| 5S7–81948–00 | 41 – 15 |
| 5EA–81950–20 | 42 – 25 |
| 5VK–81950–30 | 42 – 24 |
| 5EA–81952–00 | 42 – 26 |
| 1D7–81960–00 | 42 – 1 |
| 2D1–82100–00 | 42 – 9 |
| 5S7–82116–00 | 42 – 10 |
| 5SL–82119–10 | 42 – 7 |
| 51Y–82122–00 | 20 – 4 |
| 5S7–82131–00 | 20 – 7 |
| 42X–82151–00 | 42 – 6 |
| 5PS–82151–00 | 42 – 23 |

| PART NO. | REF. NO. |
|---|---|
| 5JJ–82151–10 | 42 – 20 |
| 5JJ–82151–20 | 42 – 22 |
| 5JJ–82151–30 | 42 – 21 |
| 5S7–82310–00 | 41 – 9 |
| 1D7–82310–10 | 41 – 10 |
| 5S7–82370–00 | 41 – 11 |
| 5S7–82380–00 | 8 – 27 |
| 3D8–82501–00 | 42 – 12 |
| 5S7–82509–00 | 41 – 24 |
| 5S7–82509–10 | 41 – 7 |
| 4BH–82511–09 | 42 – 13 |
| 5S7–82522–00 | 39 – 10 |
| 5S7–82530–00 | 42 – 11 |
| 3GB–82540–01 | 41 – 6 |
| 3D8–82566–70 | 41 – 4 |
| 5S7–82568–00 | 42 – 17 |
| 5VU–82576–01 | 42 – 27 |
| 5S7–82590–00 | 42 – 19 |
| 1UA–82591–00 | 32 – 11 |
| | 42 – 31 |
| 3MA–82591–00 | 42 – 34 |
| 5BN–82911–20 | 40 – 2 |
| 3YX–82917–01 | 40 – 9 |
| 3D8–83310–00 | 36 – 4 |
| 3D8–83311–00 | 36 – 23 |
| | 36 – 29 |
| 3D8–83312–00 | 36 – 6 |
| | 36 – 13 |
| | 36 – 24 |
| | 36 – 30 |
| 3D8–83313–00 | 36 – 8 |
| | 36 – 15 |
| | 36 – 25 |
| | 36 – 31 |
| 3D8–83320–00 | 36 – 11 |
| 3D8–83330–00 | 36 – 22 |
| 3D8–8333L–00 | 36 – 7 |
| | 36 – 14 |
| 3D8–83340–00 | 36 – 28 |
| 3D8–83348–00 | 36 – 9 |
| | 36 – 16 |
| | 36 – 26 |
| | 36 – 32 |
| 5S7–83350–00 | 41 – 27 |
| 5S7–83368–00 | 36 – 35 |
| 3D8–83371–00 | 41 – 28 |
| 5S7–83500–00 | 37 – 1 |
| 5S7–83510–00 | 37 – 2 |

| PART NO. | REF. NO. |
|---|---|
| 4WM–83513–00 | 37 – 12 |
| 4WM–83519–00 | 37 – 7 |
| 5VN–8353E–20 | 37 – 3 |
| 4WM–8353F–02 | 37 – 4 |
| 5S7–83559–00 | 37 – 15 |
| 5EL–8357E–00 | 37 – 8 |
| 4P9–83591–00 | 41 – 20 |
| 5S7–83755–00 | 41 – 13 |
| 5BN–83912–00 | 40 – 1 |
| 4TR–83913–00 | 40 – 3 |
| 36Y–83913–01 | 40 – 13 |
| 5S7–83922–00 | 40 – 11 |
| 4TR–83945–10 | 40 – 4 |
| 5S7–83972–00 | 40 – 24 |
| 5S7–83973–00 | 40 – 21 |
| 36Y–83980–01 | 40 – 18 |
| 5PX–84125–00 | 38 – 13 |
| 5S7–84310–00 | 38 – 1 |
| 8G9–84314–00 | 38 – 5 |
| 5S7–84315–00 | 38 – 2 |
| 5PX–84317–00 | 38 – 15 |
| 5PX–84318–00 | 38 – 4 |
| 5PX–84320–00 | 38 – 3 |
| 5PX–84325–00 | 38 – 11 |
| 5S7–84330–00–P1 | 38 – 17 |
| 5S7–84330–00–P2 | 38 – 17 |
| 5PX–84331–00 | 38 – 7 |
| 5PX–84332–00 | 38 – 8 |
| 5PX–84334–00 | 38 – 9 |
| 5PX–84352–00 | 38 – 14 |
| 5PX–84354–00 | 38 – 12 |
| 42X–84366–00 | 38 – 18 |
| 5PX–84385–00 | 38 – 10 |
| 5PX–84397–00 | 38 – 6 |
| 3F9–84553–00 | 39 – 6 |
| 5S7–84700–00 | 39 – 21 |
| 5S7–84702–00 | 39 – 31 |
| 1A2–84714–41 | 36 – 5 |
| | 36 – 12 |
| | 39 – 23 |
| 5S7–84721–00 | 39 – 22 |
| 5S7–84723–00 | 39 – 24 |
| 3D8–84726–00 | 39 – 25 |
| 5S7–84736–00 | 39 – 26 |
| 5PX–84742–00 | 39 – 5 |
| 5PX–84744–00 | 39 – 2 |
| 5C7–84745–00 | 39 – 1 |
| 5PX–84748–00 | 39 – 4 |

| PART NO. | REF. NO. |
|---|---|
| 5PX–84749–00 | 39 – 3 |
| 5S7–84751–00 | 39 – 13 |
| 11H–85110–01 | 19 – 7 |
| 449–85131–02 | 39 – 18 |
| 5VY–85720–00 | 41 – 1 |
| 5S7–85752–00 | 24 – 38 |
| 8GL–85885–00 | 8 – 18 |
| 5YU–85886–00 | 41 – 22 |
| 5S7–8591A–00 | 41 – 12 |
| 5S7–8592A–00 | 10 – 5 |
| 5VY–8A8E0–00 | 41 – 2 |
| 1JL–W0041–00 | 31 – 2 |
| 4BP–W0042–50 | 33 – 15 |
| 5S7–W0045–00 | 27 – 8 |
| 1D7–W0046–00 | 29 – 8 |
| 3JB–W0047–00 | 27 – 5 |
| 5JW–W0047–00 | 29 – 5 |
| 51L–W0048–00 | 29 – 10 |
| 1D7–W0057–00 | 29 – 4 |
| 3YX–W0057–00 | 27 – 4 |
| 5PX–W2470–00 | 20 – 18 |
| 5S7–W2587–00 | 31 – 1 |
| 5S7–Y2161–00–P1 | 19 – 10 |
| 5S7–Y2161–10–P2 | 19 – 10 |
| 3D8–Y2343–00 | 22 – 9 |
| 5S7–Y2410–00–01 | 24 – 1 |
| 5S7–Y2410–00–03 | 24 – 1 |
| 90101–10016 | 5 – 5 |
| 90101–12027 | 21 – 19 |
| 90105–06063 | 42 – 16 |
| 90105–06066 | 6 – 3 |
| 90105–06085 | 39 – 33 |
| 90105–06096 | 31 – 10 |
| 90105–06126 | 33 – 44 |
| 90105–06135 | 22 – 20 |
| 90105–06144 | 11 – 10 |
| 90105–06639 | 20 – 19 |
| | 20 – 21 |
| 90105–08021 | 42 – 4 |
| 90105–08126 | 25 – 15 |
| 90105–082A5 | 41 – 29 |
| 90105–10157 | 32 – 12 |
| 90105–10233 | 21 – 13 |
| 90105–10236 | 18 – 5 |
| | 18 – 9 |
| | 18 – 13 |
| 90105–10345 | 32 – 44 |
| 90105–10354 | 32 – 3 |

| PART NO. | REF. NO. |
|---|---|
| 90105–10362 | 32 – 28 |
| 90105–10638 | 27 – 13 |
| 90105–12043 | 18 – 10 |
| 90105–12044 | 18 – 14 |
| 90105–12069 | 18 – 16 |
| 90105–12252 | 18 – 6 |
| 90105–12584 | 13 – 13 |
| 90109–080G5 | 42 – 14 |
| 90109–083G4 | 27 – 2 |
| | 29 – 2 |
| 90109–10024 | 21 – 26 |
| 90109–10028 | 21 – 49 |
| 90110–04003 | 42 – 29 |
| 90110–05028 | 24 – 16 |
| 90110–05217 | 41 – 5 |
| 90110–06060 | 2 – 4 |
| | 2 – 8 |
| 90110–06086 | 12 – 3 |
| | 12 – 19 |
| 90110–06161 | 6 – 9 |
| | 6 – 13 |
| | 11 – 14 |
| | 11 – 16 |
| | 34 – 4 |
| 90110–06168 | 8 – 7 |
| | 41 – 14 |
| 90110–06169 | 13 – 4 |
| 90110–06177 | 34 – 5 |
| 90110–06182 | 12 – 16 |
| 90110–06245 | 25 – 12 |
| 90110–06263 | 42 – 2 |
| 90110–06265 | 40 – 12 |
| 90110–06270 | 11 – 17 |
| 90110–06274 | 1 – 37 |
| 90110–06276 | 36 – 36 |
| 90110–06300 | 41 – 17 |
| 90110–06334 | 12 – 20 |
| 90110–08065 | 1 – 16 |
| 90110–10016 | 18 – 3 |
| 90110–10030 | 11 – 11 |
| 90111–05007 | 37 – 19 |
| 90111–05024 | 9 – 10 |
| 90111–05037 | 36 – 21 |
| 90111–06016 | 22 – 22 |
| 90111–06019 | 33 – 10 |
| 90111–06038 | 20 – 11 |
| | 20 – 27 |
| | 21 – 36 |

| PART NO. | REF. NO. |
|---|---|
| 90111–06054 | 39 – 12 |
| 90111–06067 | 24 – 33 |
| 90111–06078 | 21 – 46 |
| 90111–06130 | 12 – 41 |
| 90111–08031 | 32 – 51 |
| | 32 – 58 |
| 90111–10006 | 10 – 17 |
| 90111–10032 | 10 – 20 |
| 90116–12011 | 11 – 9 |
| 90116–12012 | 11 – 8 |
| 90119–06173 | 5 – 10 |
| 90119–08M51 | 1 – 25 |
| 90123–08083 | 40 – 5 |
| 90149–05299 | 20 – 33 |
| 90149–06023 | 20 – 17 |
| 90149–06040 | 41 – 19 |
| 90149–06280 | 10 – 10 |
| 90149–06302 | 1 – 26 |
| | 21 – 32 |
| | 21 – 40 |
| | 21 – 43 |
| 90151–06024 | 15 – 30 |
| 90154–06028 | 40 – 15 |
| 90157–05026 | 32 – 20 |
| | 32 – 36 |
| 90164–04023 | 37 – 6 |
| 90170–06020 | 40 – 16 |
| 90170–06024 | 17 – 22 |
| 90170–08010 | 33 – 19 |
| 90170–08173 | 4 – 13 |
| 90170–18008 | 14 – 5 |
| 90176–05004 | 19 – 8 |
| | 24 – 22 |
| | 39 – 20 |
| 90176–06041 | 32 – 26 |
| | 32 – 42 |
| 90176–08006 | 10 – 19 |
| 90176–08009 | 17 – 12 |
| | 33 – 13 |
| 90176–12052 | 22 – 15 |
| 90176–22081 | 22 – 7 |
| 90179–05003 | 20 – 35 |
| 90179–05523 | 37 – 20 |
| 90179–08316 | 40 – 6 |
| 90179–12004 | 1 – 13 |
| 90179–20007 | 14 – 23 |
| 90179–22028 | 15 – 36 |
| 90179–25033 | 22 – 4 |

| PART NO. | REF. NO. |
|---|---|
| 90183–050A6 | 37 – 14 |
| 90183–06053 | 21 – 45 |
| 90185–08097 | 10 – 23 |
| 90185–10008 | 32 – 5 |
| 90185–12002 | 18 – 7 |
| | 18 – 11 |
| | 18 – 15 |
| | 18 – 17 |
| 90185–16002 | 21 – 4 |
| 90185–18167 | 28 – 32 |
| 90201–04027 | 42 – 30 |
| 90201–05025 | 39 – 8 |
| 90201–05032 | 39 – 34 |
| 90201–05036 | 37 – 11 |
| 90201–051K1 | 19 – 9 |
| | 39 – 19 |
| 90201–06023 | 24 – 32 |
| | 33 – 9 |
| 90201–06025 | 33 – 31 |
| 90201–06088 | 9 – 14 |
| 90201–06095 | 21 – 39 |
| | 39 – 30 |
| 90201–06380 | 39 – 16 |
| 90201–064K6 | 10 – 11 |
| 90201–08083 | 33 – 21 |
| 90201–087A9 | 10 – 32 |
| 90201–08M01 | 24 – 13 |
| 90201–10029 | 14 – 26 |
| 90201–10035 | 21 – 27 |
| 90201–10128 | 41 – 21 |
| 90201–101J1 | 21 – 15 |
| 90201–10591 | 5 – 6 |
| 90201–12008 | 13 – 12 |
| 90201–12025 | 1 – 14 |
| 90201–12045 | 21 – 20 |
| | 28 – 22 |
| 90201–12049 | 17 – 18 |
| 90201–12688 | 17 – 16 |
| | 33 – 4 |
| 90201–127E1 | 17 – 10 |
| 90201–14220 | 22 – 13 |
| 90201–16018 | 21 – 3 |
| 90201–177G4 | 17 – 8 |
| 90201–18029 | 28 – 34 |
| 90201–20029 | 28 – 33 |
| 90201–210U0 | 32 – 50 |
| | 32 – 57 |
| 90201–220T0 | 22 – 8 |

| PART NO. | REF. NO. |
|---|---|
| 90201–224L4 | 15 – 27 |
| 90201–243U9 | 21 – 9 |
| 90201–350F3 | 13 – 10 |
| 90202–05193 | 24 – 39 |
| 90202–26142 | 22 – 5 |
| 90206–12074 | 33 – 6 |
| 90208–20001 | 14 – 22 |
| 90208–22004 | 15 – 35 |
| 90209–25011 | 15 – 4 |
| 90209–28008 | 15 – 17 |
| 90214–25003 | 15 – 10 |
| 90214–25004 | 15 – 9 |
| 90214–28002 | 15 – 21 |
| 90214–29002 | 15 – 20 |
| 90215–18003 | 14 – 4 |
| 90240–08124 | 33 – 20 |
| 90269–07077 | 19 – 17 |
| 90280–05048 | 13 – 11 |
| 90338–06018 | 20 – 24 |
| 90338–07010 | 39 – 17 |
| 90338–08163 | 22 – 18 |
| 90338–10164 | 30 – 5 |
| 90340–14117 | 12 – 7 |
| 90340–14132 | 6 – 14 |
| 90340–36078 | 12 – 5 |
| 90387–050T5 | 37 – 13 |
| 90387–06043 | 12 – 40 |
| 90387–06072 | 33 – 29 |
| 90387–06109 | 20 – 2 |
| 90387–06171 | 21 – 31 |
| | 21 – 35 |
| 90387–06173 | 20 – 10 |
| | 20 – 16 |
| 90387–06175 | 38 – 25 |
| 90387–06177 | 24 – 10 |
| 90387–06231 | 20 – 26 |
| 90387–06237 | 33 – 11 |
| 90387–06251 | 39 – 7 |
| 90387–06255 | 36 – 20 |
| 90387–062L2 | 24 – 34 |
| 90387–06372 | 21 – 42 |
| 90387–064M9 | 39 – 28 |
| 90387–07717 | 19 – 21 |
| 90387–08021 | 10 – 29 |
| 90387–084N8 | 1 – 24 |
| 90387–087L0 | 9 – 6 |
| 90387–1003G | 32 – 4 |
| 90387–10049 | 21 – 14 |

| PART NO. | REF. NO. |
|---|---|
| 90387–100T8 | 21 – 12 |
| 90387–126T1 | 21 – 18 |
| 90387–127W0 | 21 – 24 |
| 90387–173M5 | 26 – 4 |
| 90387–173R6 | 26 – 8 |
| 90387–20012 | 28 – 28 |
| 90387–202X9 | 28 – 29 |
| 90387–25008 | 15 – 25 |
| 90387–25025 | 15 – 7 |
| 90387–26006 | 14 – 20 |
| 90387–28003 | 15 – 2 |
| 90387–28004 | 15 – 22 |
| 90387–30010 | 15 – 32 |
| 90387–31003 | 15 – 15 |
| 90401–10020 | 31 – 12 |
| | 33 – 36 |
| 90401–20003 | 7 – 3 |
| 90430–08119 | 1 – 5 |
| | 1 – 10 |
| 90430–10005 | 31 – 13 |
| | 33 – 37 |
| 90430–10148 | 41 – 8 |
| 90430–10171 | 11 – 7 |
| 90445–057G5 | 42 – 28 |
| 90445–115K4 | 24 – 23 |
| 90445–16641 | 32 – 9 |
| 90450–40001 | 10 – 4 |
| 90450–45001 | 10 – 6 |
| 90450–54006 | 8 – 16 |
| 90460–15126 | 42 – 44 |
| 90462–16005 | 18 – 28 |
| 90464–06214 | 30 – 9 |
| 90464–09129 | 20 – 37 |
| 90464–10008 | 42 – 41 |
| 90464–10190 | 24 – 26 |
| | 42 – 33 |
| 90464–10M57 | 24 – 30 |
| 90464–11003 | 20 – 29 |
| | 20 – 38 |
| 90464–12001 | 20 – 36 |
| | 33 – 24 |
| 90464–12036 | 42 – 38 |
| 90464–12089 | 42 – 42 |
| 90464–13073 | 42 – 47 |
| 90464–15192 | 33 – 39 |
| | 40 – 23 |
| | 40 – 26 |
| 90464–15195 | 42 – 43 |

| PART NO. | REF. NO. |
|---|---|
| 90464–16001 | 33 – 47 |
| 90464–16003 | 42 – 40 |
| 90464–16006 | 11 – 18 |
| 90464–16012 | 42 – 39 |
| 90464–17002 | 38 – 21 |
| 90464–18007 | 42 – 48 |
| 90464–18011 | 9 – 22 |
| 90464–20004 | 42 – 37 |
| 90464–20010 | 20 – 39 |
| 90464–20020 | 38 – 19 |
| 90464–20181 | 20 – 40 |
| 90464–20191 | 9 – 21 |
| | 24 – 25 |
| | 24 – 29 |
| | 42 – 35 |
| 90464–25217 | 42 – 36 |
| 90464–32060 | 42 – 32 |
| 90465–10098 | 42 – 45 |
| 90465–13M39 | 42 – 46 |
| 90465–13M76 | 38 – 23 |
| 90467–07093 | 8 – 26 |
| 90467–09037 | 8 – 31 |
| 90467–09103 | 8 – 32 |
| | 24 – 19 |
| | 24 – 24 |
| | 24 – 28 |
| 90467–10041 | 24 – 37 |
| 90467–12003 | 8 – 13 |
| 90467–14057 | 33 – 34 |
| 90467–16195 | 9 – 20 |
| 90467–170A2 | 9 – 18 |
| | 9 – 19 |
| 90480–01558 | 20 – 32 |
| 90480–10627 | 1 – 31 |
| 90480–11006 | 9 – 5 |
| 90480–12550 | 20 – 12 |
| | 20 – 22 |
| 90480–13004 | 21 – 30 |
| | 21 – 34 |
| | 21 – 38 |
| 90480–13022 | 12 – 39 |
| 90480–13027 | 19 – 12 |
| 90480–13163 | 24 – 35 |
| | 33 – 12 |
| 90480–13398 | 36 – 3 |
| 90480–13426 | 20 – 28 |
| 90480–13567 | 20 – 31 |
| 90480–14004 | 39 – 32 |

| PART NO. | REF. NO. |
|---|---|
| 90480–14016 | 39 – 27 |
| 90480–14027 | 1 – 23 |
| 90480–15235 | 37 – 17 |
| 90480–17005 | 10 – 9 |
| 90501–10312 | 40 – 17 |
| 90506–18015 | 17 – 2 |
| 90506–23015 | 32 – 6 |
| 90506–29006 | 32 – 7 |
| 90508–18040 | 14 – 25 |
| 90508–32040 | 17 – 5 |
| 91312–05010 | 8 – 6 |
| 91312–05025 | 9 – 9 |
| 91312–06010 | 20 – 42 |
| 91312–06016 | 1 – 18 |
| 91312–06020 | 8 – 15 |
| | 8 – 24 |
| | 17 – 20 |
| | 18 – 19 |
| 91312–08035 | 12 – 36 |
| 91314–06025 | 5 – 15 |
| | 31 – 8 |
| 91314–06030 | 35 – 12 |
| 91314–08025 | 22 – 17 |
| 91314–08030 | 22 – 10 |
| 91314–08035 | 23 – 37 |
| 91314–08040 | 10 – 16 |
| 91314–10020 | 23 – 38 |
| 91380–06016 | 41 – 25 |
| 91401–20012 | 32 – 49 |
| | 32 – 56 |
| | 33 – 22 |
| 91701–06032 | 32 – 48 |
| | 32 – 55 |
| 91815–16017 | 1 – 15 |
| 92012–06012 | 19 – 19 |
| 92012–06016 | 18 – 29 |
| 92012–06020 | 20 – 3 |
| 92012–08014 | 24 – 12 |
| 92012–08016 | 36 – 2 |
| 92014–06014 | 12 – 13 |
| | 12 – 24 |
| | 12 – 32 |
| 92014–06020 | 33 – 32 |
| 92014–08030 | 19 – 26 |
| 92014–08045 | 19 – 25 |
| 92902–04600 | 40 – 20 |
| 92902–05200 | 32 – 27 |
| | 32 – 43 |

| PART NO. | REF. NO. |
|---|---|
| 92902–05600 | 8 – 29 |
| 92902–08600 | 12 – 29 |
| | 28 – 26 |
| 92990–08200 | 19 – 27 |
| 93101–14102 | 12 – 17 |
| 93102–12106 | 12 – 43 |
| 93102–15212 | 12 – 27 |
| 93102–28022 | 26 – 3 |
| 93102–45012 | 15 – 33 |
| 93106–28001 | 28 – 3 |
| 93106–30004 | 28 – 17 |
| 93109–17071 | 21 – 23 |
| 93210–06564 | 6 – 12 |
| 93210–07135 | 12 – 22 |
| 93210–09165 | 6 – 11 |
| 93210–10096 | 7 – 2 |
| 93210–14003 | 6 – 8 |
| 93210–14369 | 12 – 8 |
| 93210–18319 | 11 – 3 |
| 93210–27370 | 12 – 10 |
| 93210–27672 | 15 – 31 |
| 93210–357A3 | 12 – 6 |
| 93306–00006 | 13 – 7 |
| 93306–00304 | 14 – 13 |
| 93306–30317 | 26 – 2 |
| 93306–30437 | 28 – 2 |
| | 28 – 14 |
| 93306–30610 | 15 – 28 |
| 93306–37213 | 15 – 13 |
| 93306–37817 | 15 – 12 |
| 93310–33560 | 14 – 21 |
| 93315–31502 | 12 – 26 |
| 93317–11096 | 12 – 25 |
| 93317–11287 | 12 – 42 |
| 93317–31771 | 21 – 22 |
| 93317–41761 | 21 – 17 |
| 93317–42060 | 21 – 11 |
| 93320–32403 | 21 – 6 |
| 93320–32612 | 28 – 13 |
| 93320–32811 | 28 – 5 |
| 93399–99931 | 22 – 2 |
| 93399–99932 | 23 – 39 |
| 93440–10085 | 1 – 3 |
| | 1 – 8 |
| 93440–28184 | 15 – 5 |
| 93440–31187 | 15 – 18 |
| 93450–22146 | 3 – 7 |
| 93450–35163 | 28 – 16 |

| PART NO. | REF. NO. |
|---|---|
| 93604–12037 | 5 – 4 |
| 93900–00030 | 26 – 6 |
| | 28 – 10 |
| 94113–18025 | 26 – 5 |
| 94113–18027 | 26 – 5 |
| 94117–16001 | 28 – 9 |
| 94117–16009 | 28 – 9 |
| 94580–25062 | 6 – 6 |
| 94591–59132 | 5 – 7 |
| 94701–00420 | 1 – 20 |
| 95022–06008 | 42 – 8 |
| 95022–06010 | 33 – 40 |
| | 33 – 46 |
| 95022–06012 | 1 – 34 |
| 95022–06014 | 39 – 15 |
| 95022–06016 | 33 – 42 |
| | 41 – 3 |
| 95022–06025 | 38 – 24 |
| 95022–08012 | 1 – 4 |
| | 1 – 9 |
| | 25 – 18 |
| | 25 – 20 |
| | 25 – 22 |
| 95022–10016 | 11 – 6 |
| 95024–08016 | 20 – 43 |
| 95027–06010 | 19 – 6 |
| 95027–06016 | 18 – 25 |
| | 18 – 27 |
| 95302–06600 | 21 – 37 |
| | 39 – 29 |
| 95304–08600 | 28 – 27 |
| 95312–06600 | 32 – 25 |
| | 32 – 41 |
| 95314–06600 | 17 – 23 |
| 95602–06100 | 39 – 14 |
| | 40 – 14 |
| 95602–06200 | 19 – 20 |
| 95602–10200 | 21 – 16 |
| | 21 – 50 |
| 95607–06100 | 40 – 8 |
| 95612–08625 | 1 – 11 |
| 95612–10100 | 21 – 28 |
| 95612–12100 | 21 – 21 |
| 95612–12630 | 28 – 19 |
| 95614–12100 | 28 – 21 |
| 95702–05500 | 39 – 9 |
| 95702–06500 | 9 – 13 |
| | 25 – 4 |

| PART NO. | REF. NO. |
|---|---|
| 95702–06500 | 25 – 9 |
| 95702–10500 | 36 – 18 |
| | 36 – 34 |
| 95812–06016 | 24 – 40 |
| 95812–06030 | 24 – 11 |
| 95812–08020 | 19 – 2 |
| 95812–08045 | 6 – 4 |
| 95814–08035 | 10 – 22 |
| 95817–08020 | 10 – 30 |
| 95817–08025 | 33 – 23 |
| 95817–08030 | 10 – 31 |
| 95822–06012 | 25 – 13 |
| 95822–08020 | 1 – 32 |
| 95880–06010 | 10 – 26 |
| 97002–05020 | 8 – 28 |
| 97002–06025 | 14 – 17 |
| 97007–06020 | 40 – 7 |
| 97012–06020 | 9 – 12 |
| 97702–40010 | 12 – 51 |
| 97702–40014 | 12 – 50 |
| 97702–40016 | 42 – 18 |
| 97702–40630 | 36 – 10 |
| | 36 – 17 |
| | 36 – 27 |
| | 36 – 33 |
| 97702–50014 | 37 – 18 |
| 97707–40010 | 37 – 9 |
| 97707–40016 | 37 – 5 |
| 97707–50016 | 39 – 35 |
| 98502–04016 | 40 – 19 |
| 98502–05012 | 41 – 23 |
| 98502–05020 | 37 – 10 |
| 98507–05016 | 30 – 7 |
| 98507–05030 | 40 – 22 |
| | 40 – 25 |
| 98707–03020 | 40 – 10 |
| 98980–05014 | 38 – 26 |
| 99002–06600 | 32 – 18 |
| | 32 – 34 |
| 99002–07600 | 12 – 30 |
| 99009–10400 | 14 – 27 |
| 99009–12400 | 17 – 17 |
| | 33 – 5 |
| 99009–17400 | 17 – 9 |
| 99009–52500 | 28 – 4 |
| | 28 – 15 |
| 99530–08012 | 6 – 5 |
| | 12 – 4 |

| PART NO. | REF. NO. |
|---|---|
| 99530–08012 | 12 – 21 |
| | 41 – 16 |
| 99530–08016 | 2 – 11 |
| 99530–10116 | 11 – 5 |
| 99590–10114 | 12 – 37 |