YAMAHA

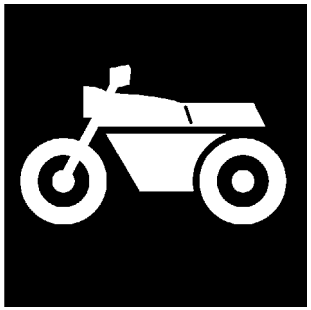

PARTS CATALOGUE

XVS11AWY (23S6) U49
XVS11AWYC (23S7) CALIFORNIA

1H23S-110E1

( )

YAMAHA
GENUINE
Parts & Accessories

XVS11AWY/AWYC
PARTS CATALOGUE
©2008 by Yamaha Motor Co., Ltd.
1st edition, May 2008
All rights reserved.
Any reprinting or unauthorized use
without the written permission of
Yamaha Motor Co., Ltd.
is expressly prohibited.
Printed in Japan.

FOREWORD

This Parts Catalogue is related to the parts for the model(s) on the cover page. When you are ordering replacement parts, please refer to this Parts Catalogue and quote both part numbers and part names correctly.

1. Modifications or additions which have been made after the issue of the Parts Catalogue will be announced in the Parts News.
   It is advisable that you make the necessary corrections to the Parts Catalogue according to the Parts News.

2. Abbreviations
   The following abbreviations are used in this Parts Catalogue.

   “UR” Use specified parts number.
   “UN” Use as many as needed.
   “AP” Alternate Parts
   “LM” Locally Made (Parts need to be ordered locally)
   “F#” Frame No. (Applicable machine No.)
   “O/S” Over Size

3. The number of components for assembly
   - Parts, which are to be supplied in an assembly, are listed with a dot (.) in front of the part name as shown below.
   - The numeral appearing to the right of each component part indicates the quantity of parts for each assembly unit.

PART NO.	DESCRIPTION	Q’TY	REMARKS
2F5–83310–60	FRONT FLASHER LIGHT ASSY	2	
115–83311–60	.BULB (6V–18W)	1	

4. Applicable colours of graphics are represented in the “REMARKS” as shown below.

PART NO.	DESCRIPTION	Q’TY	REMARKS
2N4–24110–00–X5	FUEL TANK COMP.	2	MXR
3J1–24240–10	.GRAPHIC, FUEL TANK	1	FOR MXR

5. Note that the illustrations for reference in finding parts numbers are not to be used for assembling. When assembling, please use the applicable service manual.

6. The asterisk (*) before a reference number indicates modified items after the first edition.

7. Applicable Serial No.

Engine Serial No.

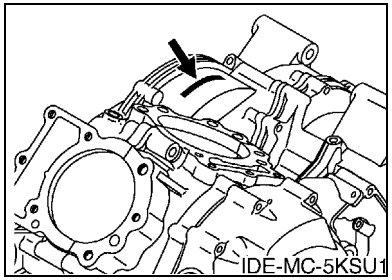

Frame Serial No.

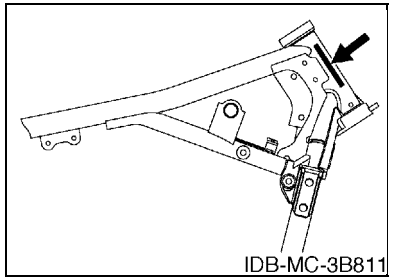

8. Applicable Colour Code (The (*) mark shows Model colour.)

Abbreviation	Colour Name	Colour Code
DBNM8(*)	DARK BLUISH GRAY METALLIC 8	0919
DRMK(*)	DEEP RED METALLIC K	0918
LGB	LOW GLOSS BLACK	0098
TGM	TITANIC GRAY METALLIC	00MA

MODEL LABEL

(1) A label called “Model Label” is affixed in the location as indicated in (3) below.
When using this parts catalogue, please be sure to cross–reference the “model code – production code No.” in the catalogue with the “model code – production code No.” indicated on the Model Label affixed onto the product concerned.

(2) “Model Label” Indication

	a b
○	xxxx – xxx
●	x c

a: Model Type Code
b: Production Code No.
c: Colouring Type

○	4TW1–010
●	A

(3) Model Label Affixing Location

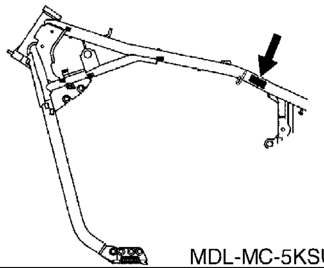

MDL-MC-5KSU1

(4) Colouring Information

Model Code	Colouring Type Code	Colour Code	Colour Name	Abbrevia-tion
23S6	A	0919	DARK BLUISH GRAY METALLIC 8	DBNM8
	B	0918	DEEP RED METALLIC K	DRMK
23S7	A	0919	DARK BLUISH GRAY METALLIC 8	DBNM8
	B	0918	DEEP RED METALLIC K	DRMK

(5) Model Code – Production Code Number of Model Listed in This Parts Catalogue

Model Code	Production Code No.	Country (destination)
23S6	010	U49
23S7	010	CALIFORNIA

CONTENTS

ENGINE

CYLINDER HEAD 1
CYLINDER 3
CRANKSHAFT & PISTON 4
VALVE 5
CAMSHAFT & CHAIN 6
OIL PUMP 7
OIL CLEANER 8
INTAKE 9
CARBURETOR 12
EXHAUST 16
CRANKCASE 18
CRANKCASE COVER 1 19
STARTER 21
CLUTCH 22
TRANSMISSION 24
MIDDLE DRIVE GEAR 25
SHIFT CAM & FORK 27
SHIFT SHAFT 28

CHASSIS

FRAME 29
FENDER 31
SIDE COVER 33
REAR ARM & SUSPENSION 35
DRIVE SHAFT 37
STEERING 39
FRONT FORK 40
FUEL TANK 42
SEAT 45
FRONT WHEEL FOR CAST WHEEL 46
FRONT BRAKE CALIPER 47
REAR WHEEL FOR CAST WHEEL 48
REAR BRAKE CALIPER 49
STEERING HANDLE & CABLE 50
FRONT MASTER CYLINDER 51
STAND & FOOTREST 52
REAR MASTER CYLINDER 55
GENERATOR 56
FLASHER LIGHT 57
METER 59
HEADLIGHT 60
TAILLIGHT 61
HANDLE SWITCH & LEVER 62
ELECTRICAL 1 63
ELECTRICAL 2 64

INDEX

NUMERICAL INDEX 66

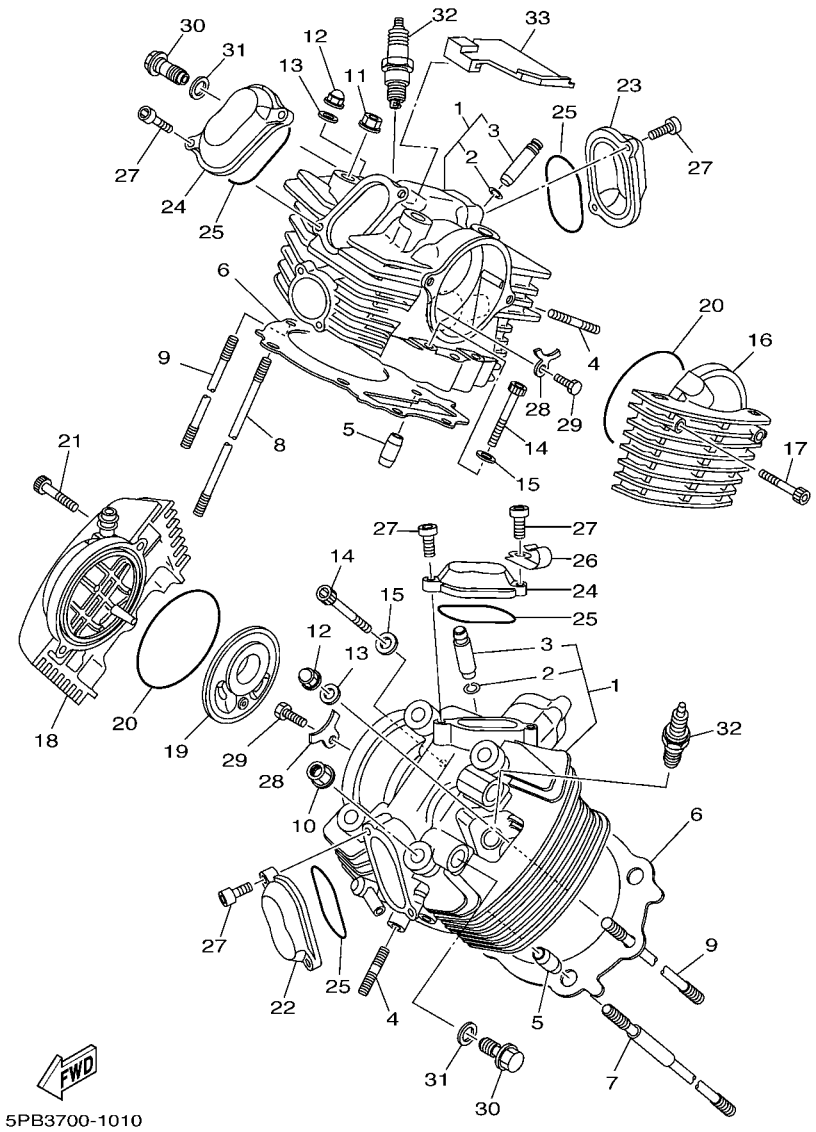

FIG. 1 CYLINDER HEAD

REF. NO.	PART NO.	DESCRIPTION	23S6	23S7				REMARKS
1	5YS–11101–00	CYLINDER HEAD ASSY	2	2				
2	93440–14086	.CIRCLIP	2	2				
3	4X7–11133–10	.GUIDE, IN./EX. VALVE	2	2				
4	95617–08625	BOLT, STUD	4	4				
5	91817–30011	PIN, DOWEL	4	4				
6	5EL–11181–00	GASKET, CYLINDER HEAD 1	2	2				
7	4X7–11363–01	BOLT, CYLINDER HOLDING 3	4	4				
8	90116–12469	BOLT, STUD	4	4				
9	90116–10344	BOLT, STUD	2	2				
10	90179–12326	NUT	4	4				
11	90179–12325	NUT	4	4				
12	90176–10075	NUT, CROWN	2	2				
13	90201–101A4	WASHER, PLATE	2	2				
14	91314–08050	BOLT, HEXAGON SOCKET HEAD	4	4				
15	92907–08600	WASHER, PLATE	4	4				
16	5YS–1111H–00	COVER, CYLINDER HEAD SIDE 4	1	1				
17	91314–06035	BOLT, HEXAGON SOCKET HEAD	2	2				
18	5YS–11185–00	COVER, CYLINDER HEAD SIDE 1	1	1				
19	42X–11165–00	PLATE, BREATHER	1	1				
20	93210–92448	O-RING	2	2				
21	91314–06035	BOLT, HEXAGON SOCKET HEAD	2	2				
22	42H–11186–02	COVER, CYLINDER HEAD SIDE 2	1	1				
23	5EL–11187–01	COVER, CYLINDER HEAD SIDE 3	1	1				
24	4X7–11187–02	COVER, CYLINDER HEAD SIDE 3	2	2				
25	93210–62446	O-RING	4	4				
26	90465–10029	CLAMP	1	1				
27	91314–06016	BOLT, HEXAGON SOCKET HEAD	8	8				

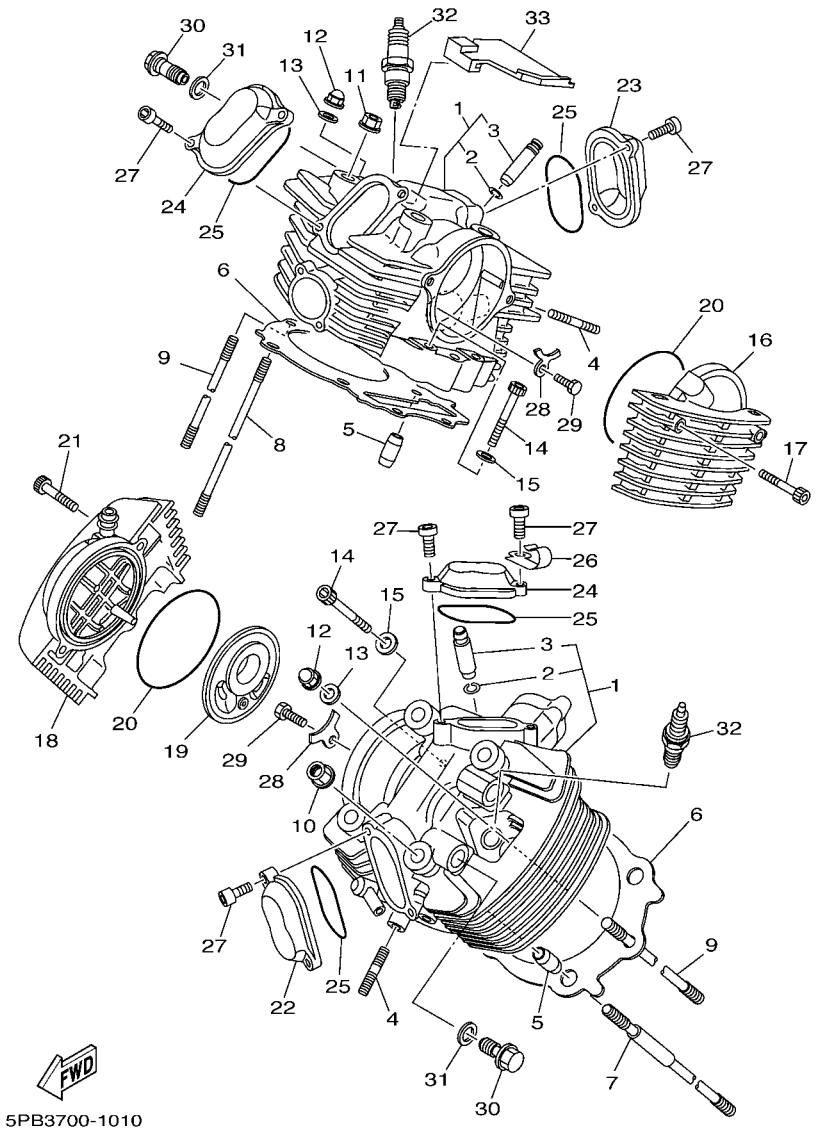

FIG. 1 CYLINDER HEAD

REF. NO.	PART NO.	DESCRIPTION	23S6	23S7				REMARKS
28	4X7–1111F–00	PLATE	2	2				
29	97017–08020	BOLT	2	2				
30	90401–16002	BOLT, UNION	2	2				
31	90430–17168	GASKET	2	2				
32	94701–00218	PLUG, SPARK (NGK BPR7ES)	2	2				UR
	94701–00220	PLUG, SPARK (ND W22EPR-U)	2	2				UR
33	5EL–1112M–00	COVER	1	1				

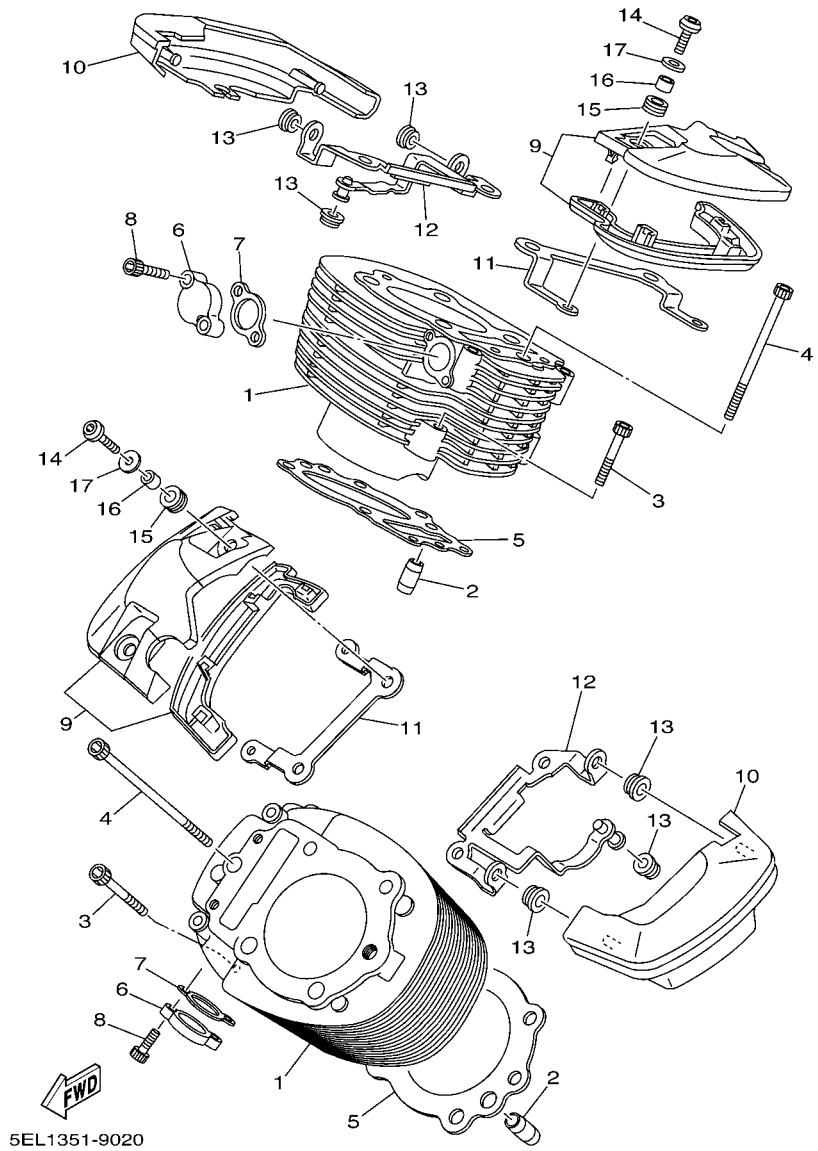

FIG. 2 CYLINDER

REF. NO.	PART NO.	DESCRIPTION	23S6	23S7				REMARKS
1	5YS–11311–00	CYLINDER 1	2	2				
2	90387–087A5	COLLAR	4	4				
3	91314–06040	BOLT, HEXAGON SOCKET HEAD	4	4				
4	91314–06100	BOLT, HEXAGON SOCKET HEAD	2	2				
5	5EL–11351–01	GASKET, CYLINDER	2	2				
6	5KS–12215–00	CAP, TENSIONER CASE	2	2				
7	4FM–12213–00	GASKET, TENSIONER CASE	2	2				
8	91314–06025	BOLT, HEXAGON SOCKET HEAD	4	4				
9	5EL–11190–00	COVER, CYLINDER HEAD 1	2	2				
10	5EL–11186–00	COVER, CYLINDER HEAD SIDE 2	2	2				
11	5EL–11152–00	BRACKET, CYLINDER HEAD COVER	2	2				
12	5EL–11142–01	BRACKET, CYLINDER HEAD COVER 2	2	2				
13	90480–10627	GROMMET	6	6				
14	90149–06298	SCREW	4	4				
15	90480–13018	GROMMET	4	4				
16	90387–06043	COLLAR	4	4				
17	90201–06057	WASHER, PLATE	4	4				

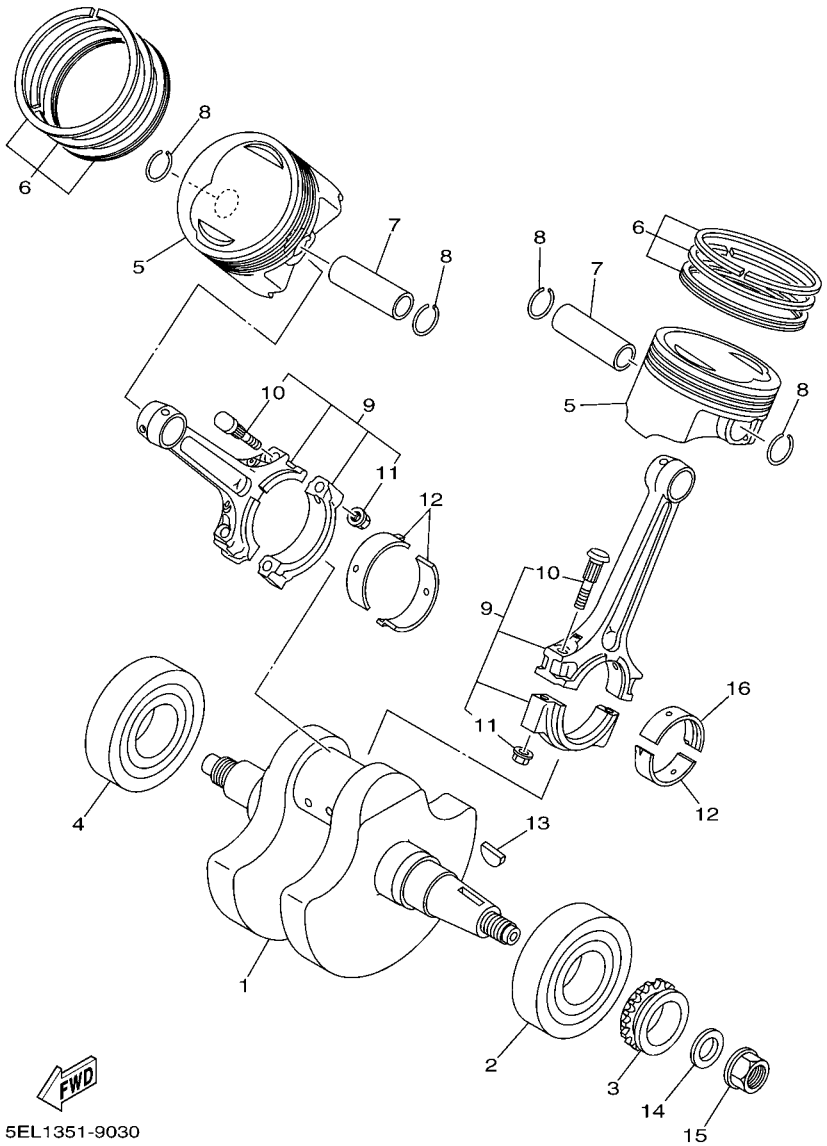

FIG. 3 CRANKSHAFT & PISTON

REF. NO.	PART NO.	DESCRIPTION	23S6	23S7				REMARKS
1	5EL–11411–10	CRANKSHAFT	1	1				
2	93306–30808	BEARING	1	1				
3	4X7–13354–00	SPROCKET, DRIVE	1	1				
4	93306–30808	BEARING	1	1				
5	5EL–11631–10	PISTON (STD)	2	2				
6	1TA–11610–00	PISTON RING SET (STD)	2	2				
7	4WM–11633–00	PIN, PISTON	2	2				
8	93450–24028	CIRCLIP	4	4				
9	5EL–11650–10	CONNECTING ROD ASSY	2	2				
10	4X7–11654–01	.BOLT, CONNECTING ROD	2	2				
11	90179–09379	.NUT	2	2				
12	4X7–11656–00	PLANE BEARING, CONNECTING ROD	3	3				UR BLUE
	4X7–11656–10	PLANE BEARING, CONNECTING ROD	3	3				UR BLACK
	4X7–11656–20	PLANE BEARING, CONNECTING ROD	3	3				UR BROWN
	4X7–11656–30	PLANE BEARING, CONNECTING ROD	3	3				UR GREEN
	4X7–11656–40	PLANE BEARING, CONNECTING ROD	3	3				UR YELLOW
13	90280–05048	KEY, WOODRUFF	1	1				
14	90201–165H4	WASHER, PLATE	1	1				
15	90179–16448	NUT	1	1				
16	5G5–11656–00	PLANE BEARING, CONNECTING ROD	1	1				UR BLACK
	5G5–11656–10	PLANE BEARING, CONNECTING ROD	1	1				UR BROWN
	5G5–11656–20	PLANE BEARING, CONNECTING ROD	1	1				UR GREEN

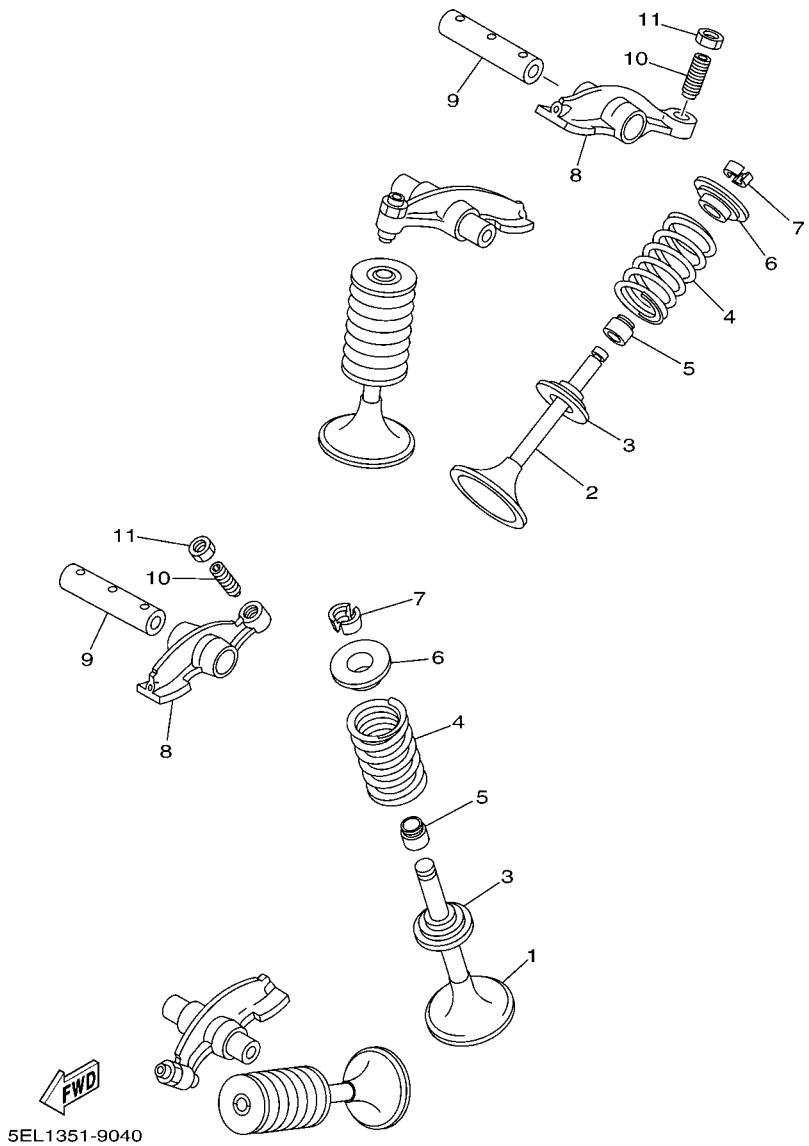

FIG. 4 VALVE

REF. NO.	PART NO.	DESCRIPTION	23S6	23S7				REMARKS
1	2J2–12111–01	VALVE, INTAKE	2	2				
2	5A8–12121–00	VALVE, EXHAUST	2	2				
3	4X7–12116–00	SEAT, VALVE SPRING	4	4				
4	90501–44455	SPRING, COMPRESSION	4	4				
5	341–12119–02	SEAL, VALVE STEM	4	4				
6	4X7–12117–00	RETAINER, VALVE SPRING	4	4				
7	4X7–12118–00	COTTER, VALVE	8	8				
8	42X–12151–00	ARM, VALVE ROCKER	4	4				
9	4X7–12156–01	SHAFT, ROCKER 2	4	4				
10	4X7–12159–00	SCREW, VALVE ADJUSTING	4	4				
11	90170–08173	NUT	4	4				

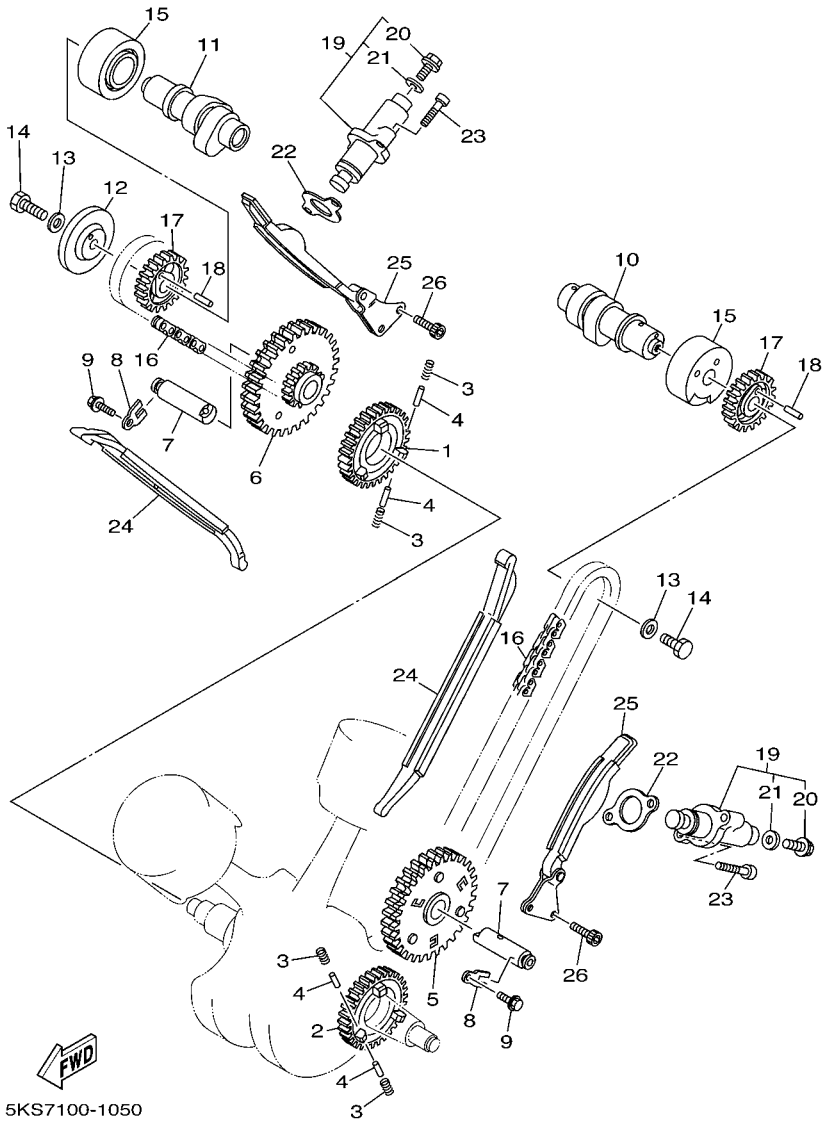

FIG. 5 CAMSHAFT & CHAIN

REF. NO.	PART NO.	DESCRIPTION	23S6	23S7				REMARKS
1	4X7–11536–00	GEAR, DRIVE (35T)	1	1				
2	4X7–11534–00	GEAR, BREAKER DRIVE (35T)	1	1				
3	90501–21133	SPRING, COMPRESSION	12	12				
4	93605–10090	PIN, DOWEL	12	12				
5	5EL–11540–01	CAM CHAIN SPROCKET ASSY 1	1	1				
6	5EL–11550–01	CAM CHAIN SPROCKET ASSY 2	1	1				
7	5EL–12247–00	SHAFT, TENSIONER	2	2				
8	90209–06205	WASHER	2	2				
9	90105–06154	BOLT, FLANGE	2	2				
10	5EL–12171–00	CAMSHAFT 1	1	1				
11	5EL–12181–00	CAMSHAFT 2	1	1				
12	42X–11145–00	PLATE, BREATHER 2	1	1				
13	90201–10591	WASHER, PLATE	2	2				
14	90101–10303	BOLT	2	2				
15	90380–25125	BUSH, SOLID	2	2				
16	94591–49098	CHAIN	2	2				
17	5EL–12176–00	SPROCKET, CAM CHAIN	2	2				
18	93604–12037	PIN, DOWEL	2	2				
19	5EL–12210–01	TENSIONER ASSY, CAM CHAIN	2	2				
20	5EL–12228–00	.BOLT	1	1				
21	5EL–12214–00	.GASKET	1	1				
22	4FM–12213–00	GASKET, TENSIONER CASE	2	2				
23	91314–06025	BOLT, HEXAGON SOCKET HEAD	4	4				
24	5EL–12231–00	GUIDE, STOPPER 1	2	2				
25	5EL–12241–01	GUIDE, STOPPER 2	2	2				
26	91314–06016	BOLT, HEXAGON SOCKET HEAD	4	4				

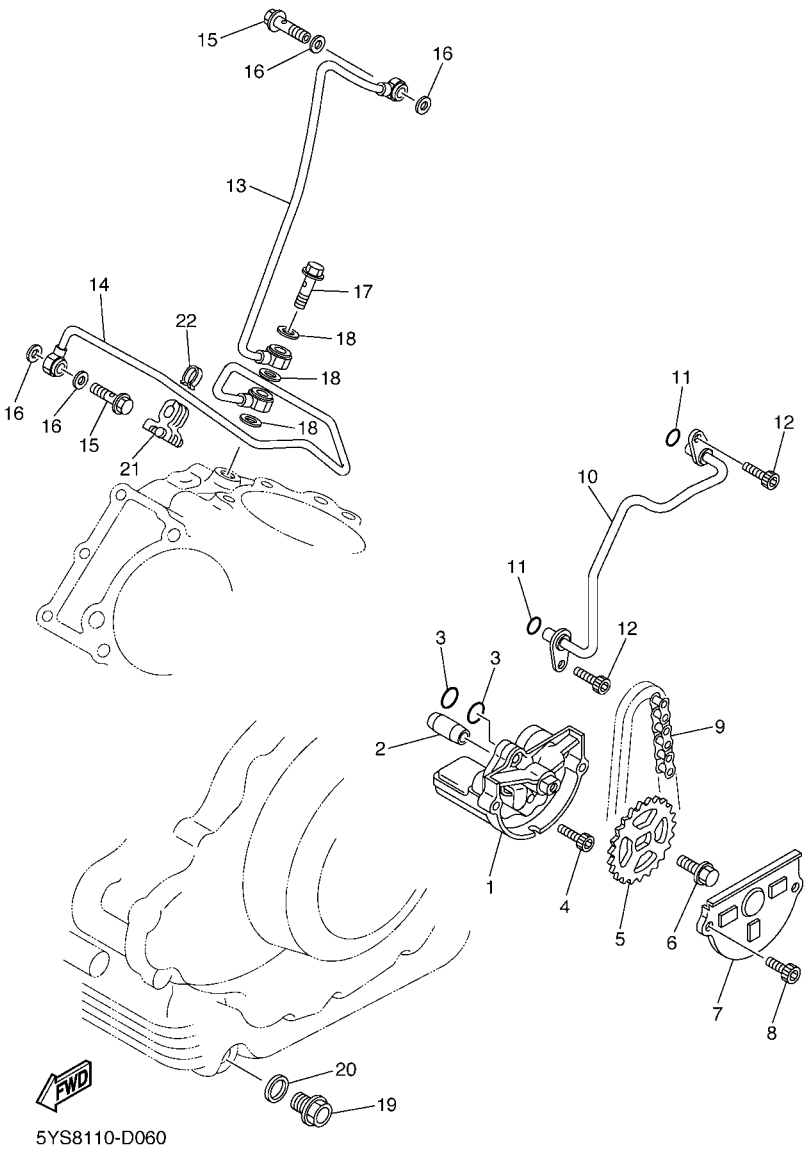

FIG. 6 OIL PUMP

REF. NO.	PART NO.	DESCRIPTION	23S6	23S7				REMARKS
1	5EL–13300–01	OIL PUMP ASSY	1	1				
2	99530–08016	PIN, DOWEL	1	1				
3	93210–07135	O-RING	2	2				
4	91317–06040	BOLT	3	3				
5	4X7–13355–00	SPROCKET, DRIVEN (35T)	1	1				
6	90105–06154	BOLT, FLANGE	1	1				
7	10L–13327–00	COVER, PUMP GEAR	1	1				
8	91317–06010	BOLT	2	2				
9	94580–25066	CHAIN	1	1				
10	4X7–13171–00	PIPE, DELIVERY 2	1	1				
11	93210–07135	O-RING	2	2				
12	91317–06010	BOLT	2	2				
13	5EL–13405–00	OIL PIPE COMP. 1	1	1				
14	5EL–13406–00	OIL PIPE COMP. 2	1	1				
15	90401–16001	BOLT, UNION	2	2				
16	90430–17168	GASKET	4	4				
17	90401–10102	BOLT, UNION	1	1				
18	90430–15169	GASKET	3	3				
19	90340–14132	PLUG, STRAIGHT SCREW	1	1				
20	214–11198–01	GASKET	1	1				
21	5EL–15485–00	CLAMP	1	1				
22	90468–05113	CLIP	1	1				

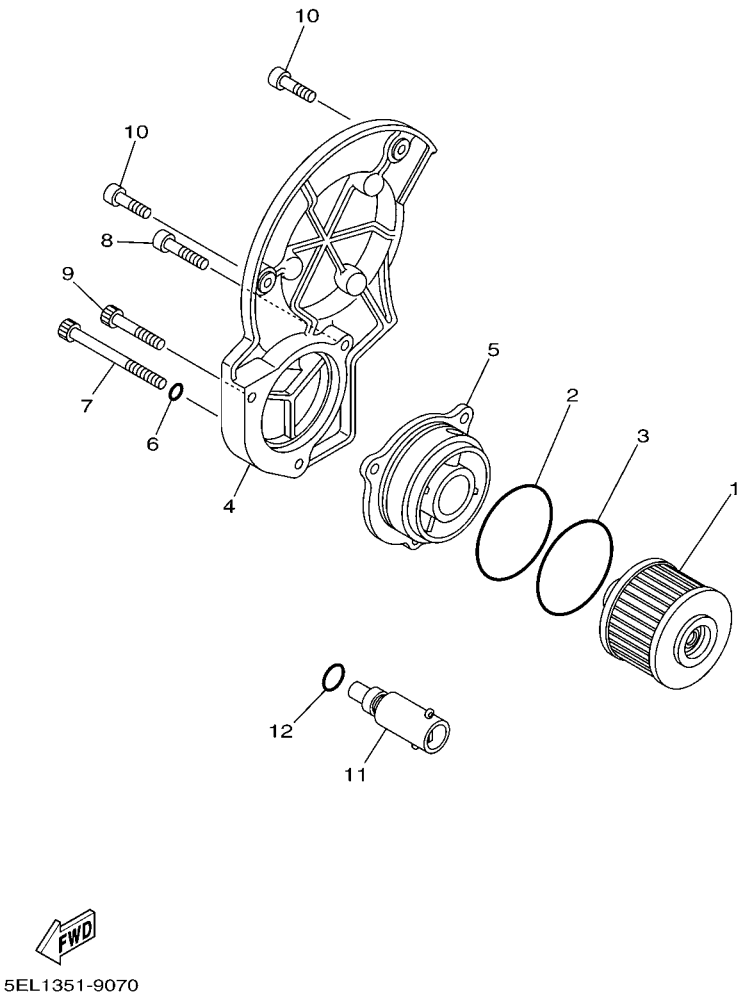

FIG. 7 OIL CLEANER

REF. NO.	PART NO.	DESCRIPTION	23S6	23S7				REMARKS
1	4X7–13440–01	ELEMENT ASSY, OIL CLEANER	1	1				
2	93210–56459	O-RING	1	1				
3	93210–54452	O-RING	1	1				
4	5EL–13447–00	COVER, OIL ELEMENT	1	1				
5	5EL–13448–00	CAP	1	1				
6	93210–07135	O-RING	1	1				
7	90109–06667	BOLT	1	1				
8	91314–06040	BOLT, HEXAGON SOCKET HEAD	1	1				
9	91314–06050	BOLT, HEXAGON SOCKET HEAD	1	1				
10	91314–06020	BOLT, HEXAGON SOCKET HEAD	2	2				
11	4G0–13490–01	RELIEF VALVE ASSY	1	1				
12	93210–10096	O-RING	1	1				

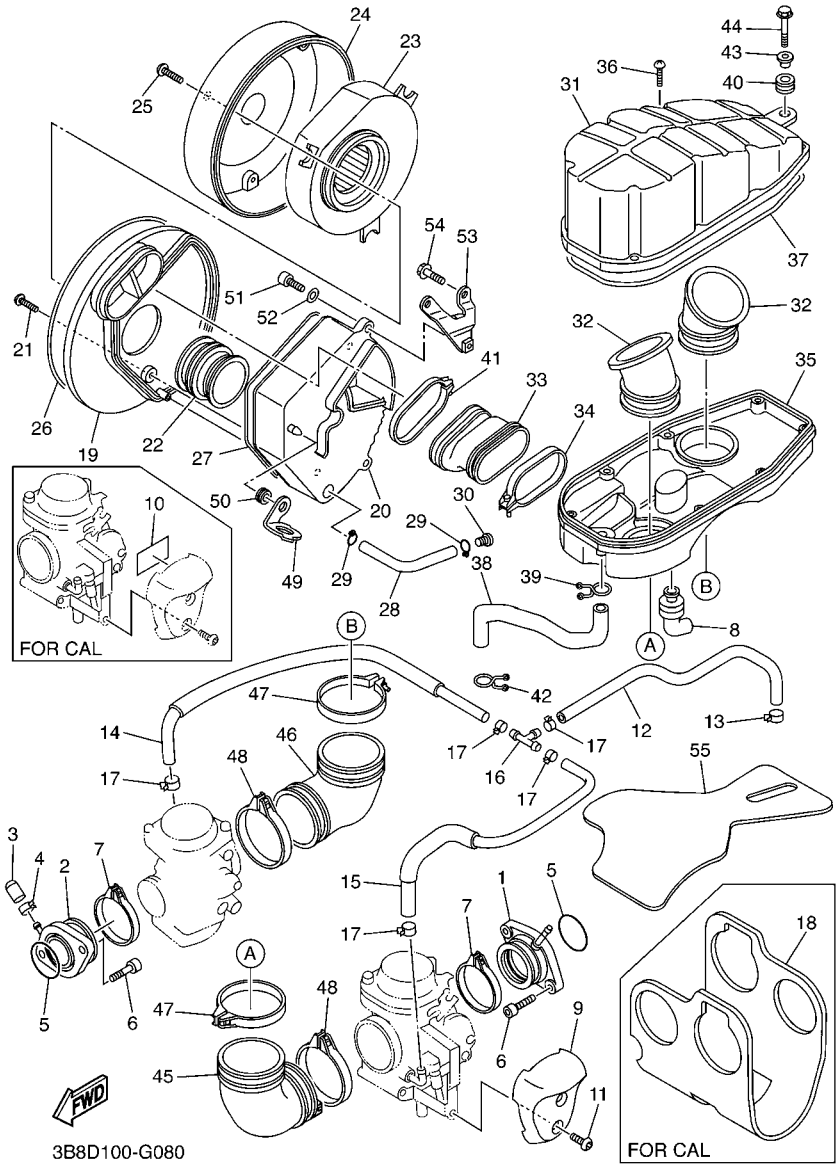

FIG. 8 INTAKE

REF. NO.	PART NO.	DESCRIPTION	23S6	23S7				REMARKS
1	5EL–13586–00	JOINT, CARBURETOR 1	1	1				
2	5EL–13596–00	JOINT, CARBURETOR 2	1	1				
3	16G–13569–00	PLUG, BLIND	1	1				
4	90467–10039	CLIP	1	1				
5	93210–44545	O-RING	2	2				
6	91317–06020	BOLT	4	4				
7	5EL–13474–00	BAND	2	2				
8	5EL–14987–00	HOSE	1	1				
9	5EL–14283–00	COVER, CARBURETOR 1	1	1				
10	3SP–21732–00	SEAL 1		1				
11	92014–05012	BOLT, BUTTON HEAD	2	2				
12	5EL–14294–10	HOSE	1	1				
13	90467–11175	CLIP	1	1				
14	5EL–14349–10	PIPE	1	1				
15	5EL–14348–10	PIPE 1	1	1				
16	90413–07007	WAY 3	1	1				
17	90467–10135	CLIP	5	5				
18	5EL–14477–00	PLATE		1				
19	5EL–14411–00	CASE, AIR CLEANER 1	1	1				
20	5EL–14417–02	COVER 1	1	1				
21	97707–50116	SCREW, TAPPING	4	4				
22	5EL–14437–00	DUCT	1	1				
23	5EL–14451–00	ELEMENT, AIR CLEANER	1	1				
24	5EL–14421–10	CASE, AIR CLEANER 2	1	1				
25	92014–05012	BOLT, BUTTON HEAD	3	3				
26	4TR–14452–00	SEAL	1	1				
27	5EL–14452–00	SEAL	1	1				

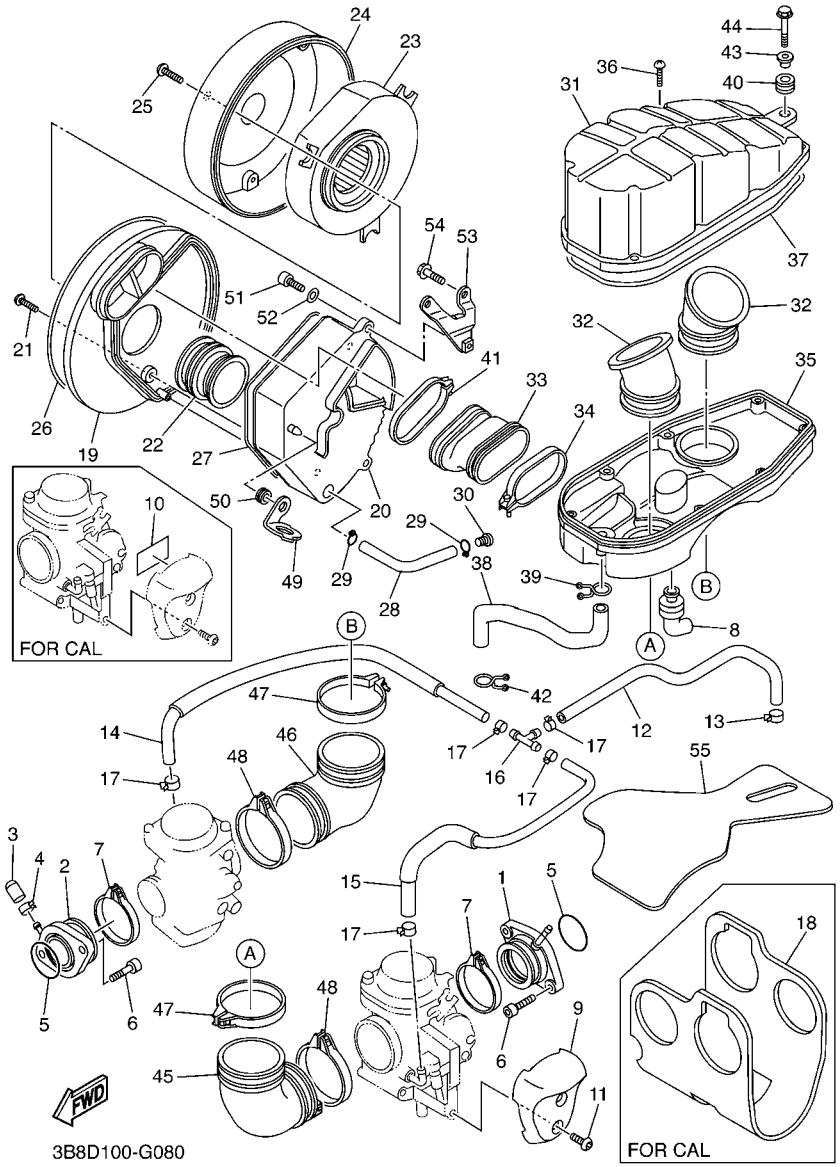

FIG. 8 INTAKE

REF. NO.	PART NO.	DESCRIPTION	23S6	23S7				REMARKS
28	5EL–14148–00	PIPE	1	1				
29	90467–11106	CLIP	2	2				
30	90338–08174	PLUG	1	1				
31	5EL–14431–00	SILENCER, INTAKE 1	1	1				
32	5EL–14454–00	JOINT	2	2				
33	5EL–1440F–00	JOINT, AIR FILTER 1	1	1				
34	5EL–14455–00	BAND	1	1				
35	5EL–14432–00	SILENCER, INNER	1	1				
36	97707–50125	SCREW, TAPPING	8	8				
37	5EL–14462–00	SEAL	1	1				
38	5EL–11166–00	PIPE, BREATHER 1	1	1				
39	90467–14015	CLIP	1	1				
40	90480–12314	GROMMET	1	1				
41	5EL–14455–00	BAND	1	1				
42	90467–14015	CLIP	1	1				
43	90387–065J6	COLLAR	1	1				
44	95817–06020	BOLT, FLANGE	1	1				
45	5EL–14453–00	JOINT, AIR CLEANER 1	1	1				
46	5EL–14463–00	JOINT, AIR CLEANER 2	1	1				
47	90450–72003	HOSE CLAMP ASSY	2	2				
48	90450–63096	HOSE CLAMP ASSY	2	2				
49	5EL–14499–00	STAY 2	1	1				
50	90480–13398	GROMMET	1	1				
51	91317–06020	BOLT	2	2				
52	92907–06600	WASHER, PLATE	2	2				
53	5EL–14414–00	STAY 2	1	1				
54	95817–06010	BOLT, FLANGE	2	2				

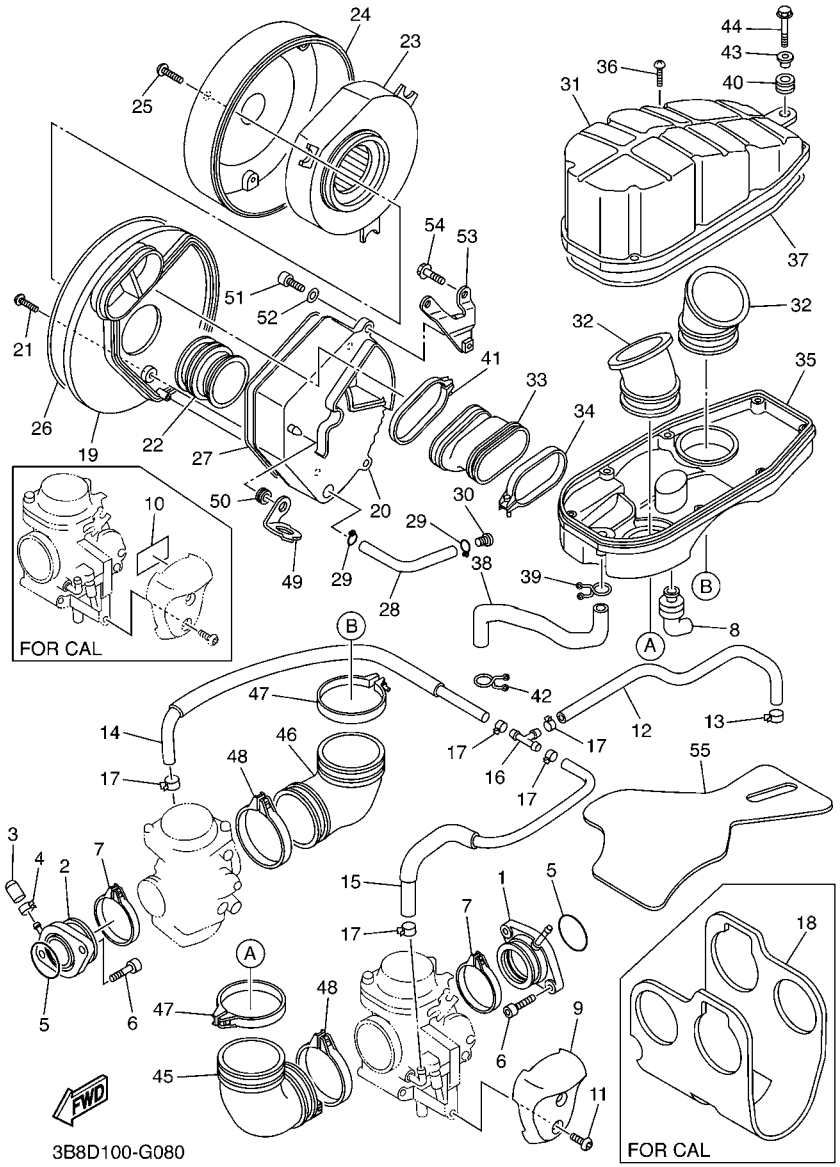

FIG. 8 INTAKE

REF. NO.	PART NO.	DESCRIPTION	23S6	23S7				REMARKS
55	5EL–12682–00	PROTECTOR, HEAT	1	1				

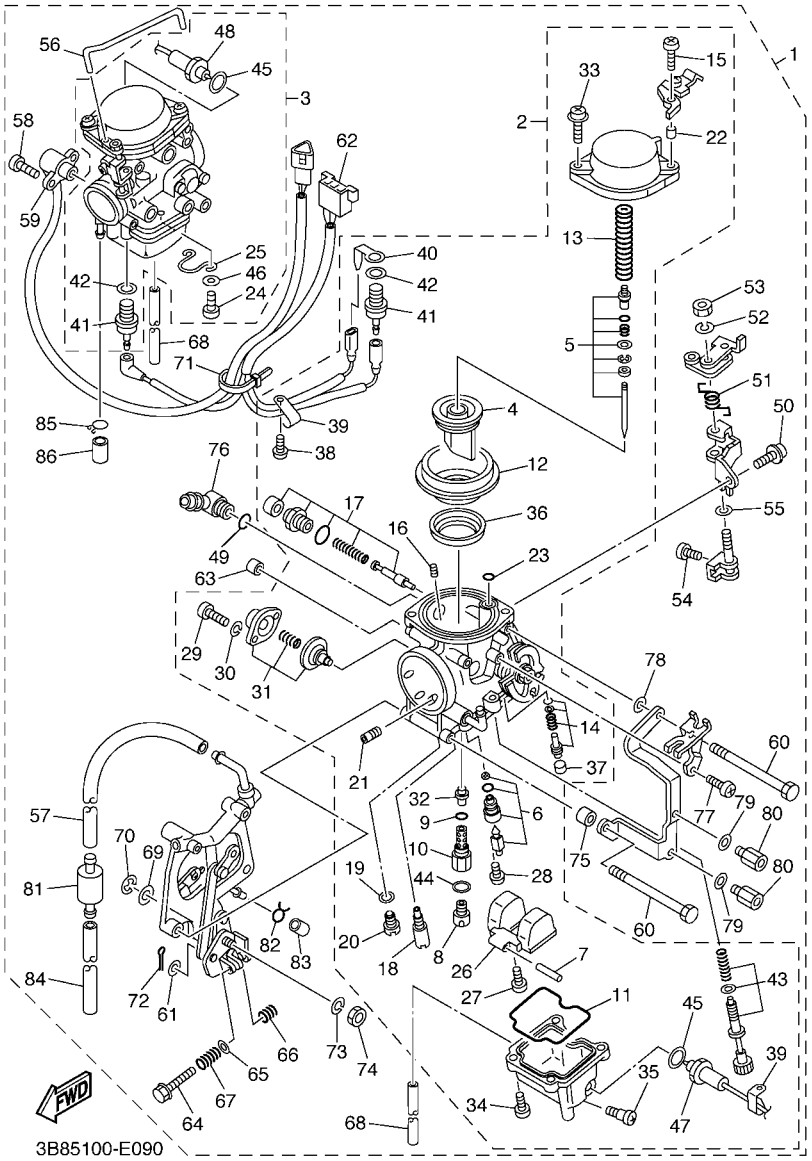

FIG. 9 CARBURETOR

REF. NO.	PART NO.	DESCRIPTION	23S6	23S7				REMARKS
1	5YS–14906–00	CARBURETOR ASSY	1					
	5YS–14900–00	CARBURETOR ASSY		1				
2	5YS–14901–00	.CARBURETOR ASSY 1	1	1				(#1)REAR
3	5YS–14902–00	.CARBURETOR ASSY 2	1	1				(#2)FRONT
4	5EL–14112–00	..VALVE, THROTTLE 1	1	1				
5	5EL–1490J–00	..NEEDLE SET	1	1				
6	5EL–14107–12	..NEEDLE VALVE SET	1	1				
7	127–14186–00	..PIN, FLOAT	1	1				
8	3G2–1423A–73	..JET, MAIN (#112.5)	1	1				(#1)REAR
	3G2–14231–23	..JET, MAIN (#115)	1	1				(#2)FRONT
9	583–14561–00	..O-RING	1	1				
10	5KS–14261–00	..HOLDER	1	1				
11	5DM–14561–00	..O-RING	1	1				
12	5EL–24411–00	..DIAPHRAGM	1	1				
13	4KM–14933–00	..SPRING, DIAPHRAGM	1	1				
14	4XY–14105–00	..PILOT SCREW SET	1	1				
15	98502–05016	..SCREW, PAN HEAD	1	1				(#1)REAR
16	1HX–14231–29	..JET, MAIN (#145)	1	1				
17	5EL–1410A–00	..STARTER SET	1	1				
18	4KM–14142–17	..JET, PILOT (# 17.5)	1	1				
19	5EL–14918–00	..RING	1	1				
20	3G2–1423A–59	..JET, MAIN (# 42.5)	1	1				
21	1HX–1423E–25	..JET, MAIN (# 63.8)	1	1				
22	4KM–14194–00	..RING	1	1				(#1)REAR
23	354–14147–00	..O-RING	1	1				
24	98507–04012	..SCREW, PAN HEAD	1	1				(#2)FRONT
25	33M–14139–00	..CLIP, PIPE	1	1				(#2)FRONT

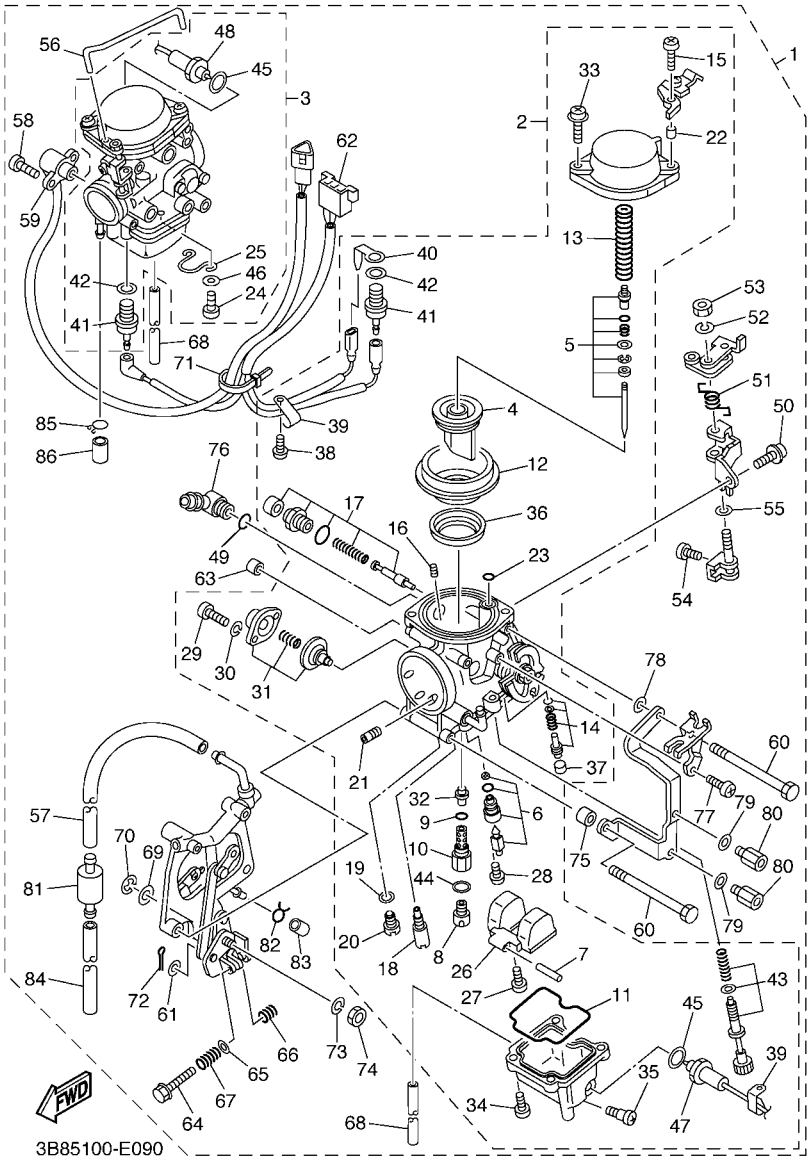

FIG. 9 CARBURETOR

REF. NO.	PART NO.	DESCRIPTION	23S6	23S7				REMARKS
26	5DM–14985–00	..FLOAT	1	1				
27	98507–04008	..SCREW, PAN HEAD	1	1				
28	1FN–14565–00	..SCREW	1	1				
29	98507–04014	..SCREW, PAN HEAD	2	2				
30	92907–04100	..WASHER, SPRING	2	2				
31	5EL–1490H–00	..DIAPHRAGM SET 5	1	1				
32	5DM–14141–40	..NOZZLE, MAIN	1	1				
33	4KM–14216–00	..SCREW	1	1				(#1)REAR
	4KM–14216–00	..SCREW	2	2				(#2)FRONT
34	98507–04010	..SCREW, PAN HEAD	4	4				(#1)REAR
	98507–04010	..SCREW, PAN HEAD	3	3				(#2)FRONT
35	12R–14191–00	..PLUG, DRAIN	1	1				
36	5EL–14561–00	..O-RING	1	1				
37	3F9–14118–00	..CAP	1	1				
38	98507–04006	..SCREW, PAN HEAD	1	1				(#1)REAR
39	90461–06087	..CLAMP	2	2				(#1)REAR
40	4DH–82103–00	..TERMINAL 1	1	1				(#1)REAR
41	5FU–83790–20	..HEATER ASSY (30W)	1	1				
42	90201–08016	..WASHER, PLATE	1	1				
43	5EL–14103–00	..THROTTLE SCREW SET	1	1				(#1)REAR
44	22U–14561–00	..O-RING	1	1				
45	256–14956–01	..WASHER	1	1				
46	92902–04600	..WASHER, PLATE	1	1				(#2)FRONT
47	5KS–1410H–00	..FUEL CUT SOLENOID VALVE	1	1				(#1)REAR
48	5KS–1410H–10	..FUEL CUT SOLENOID VALVE	1	1				(#2)FRONT
49	3LN–1416A–00	.O-RING	2	2				
50	4SV–24453–00	.SCREW	2	2				

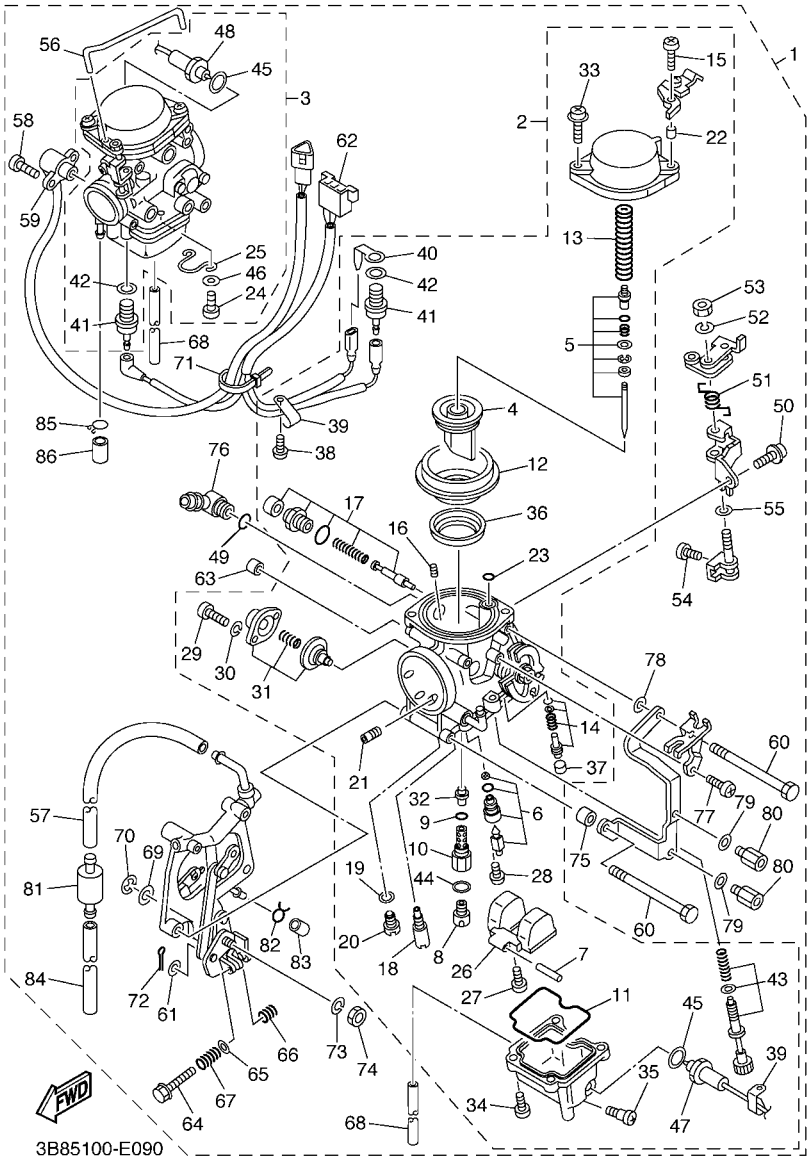

FIG. 9 CARBURETOR

REF. NO.	PART NO.	DESCRIPTION	23S6	23S7				REMARKS
51	5EL–14935–00	.SPRING	2	2				
52	92902–05100	.WASHER, SPRING	2	2				
53	95302–05700	.NUT	2	2				
54	11H–14991–00	.SCREW	2	2				
55	31H–14194–00	.RING	4	4				
56	5EL–14577–00	.ROD	1	1				
57	5EL–14987–10	.HOSE	1	1				
58	4WM–14565–00	.SCREW	2	2				
59	5EL–85885–00	.THROTTLE SENSOR ASSY	1	1				
60	5EL–14592–00	.SCREW	4	4				
61	4NK–14285–00	.WASHER	1	1				
62	5KS–81517–00	.WIRE, SUB LEAD	1	1				
63	5EL–14196–00	.PIPE	2	2				
64	5EL–14991–00	.SCREW	1	1				
65	22F–14117–00	.WASHER, PLUG SCREW	1	1				
66	5EL–14212–00	.SPRING, PILOT ADJUSTING	1	1				
67	3F7–14133–00	.SPRING, THROTTLE STOP	1	1				
68	5EL–14197–10	.PIPE	2	2				
69	1A8–14953–00	.WASHER	1	1				
70	812–14137–00	.CLIP	1	1				
71	35H–14139–00	.CLIP, PIPE	5	5				
72	91492–10008	.PIN, COTTER	4	4				
73	92906–06100	.WASHER, SPRING	1	1				
74	95382–06700	.NUT	1	1				
75	5EL–14149–00	.PIPE	1	1				
76	5EL–14251–00	.NIPPLE	1	1				
77	98507–04010	.SCREW, PAN HEAD	1	1				

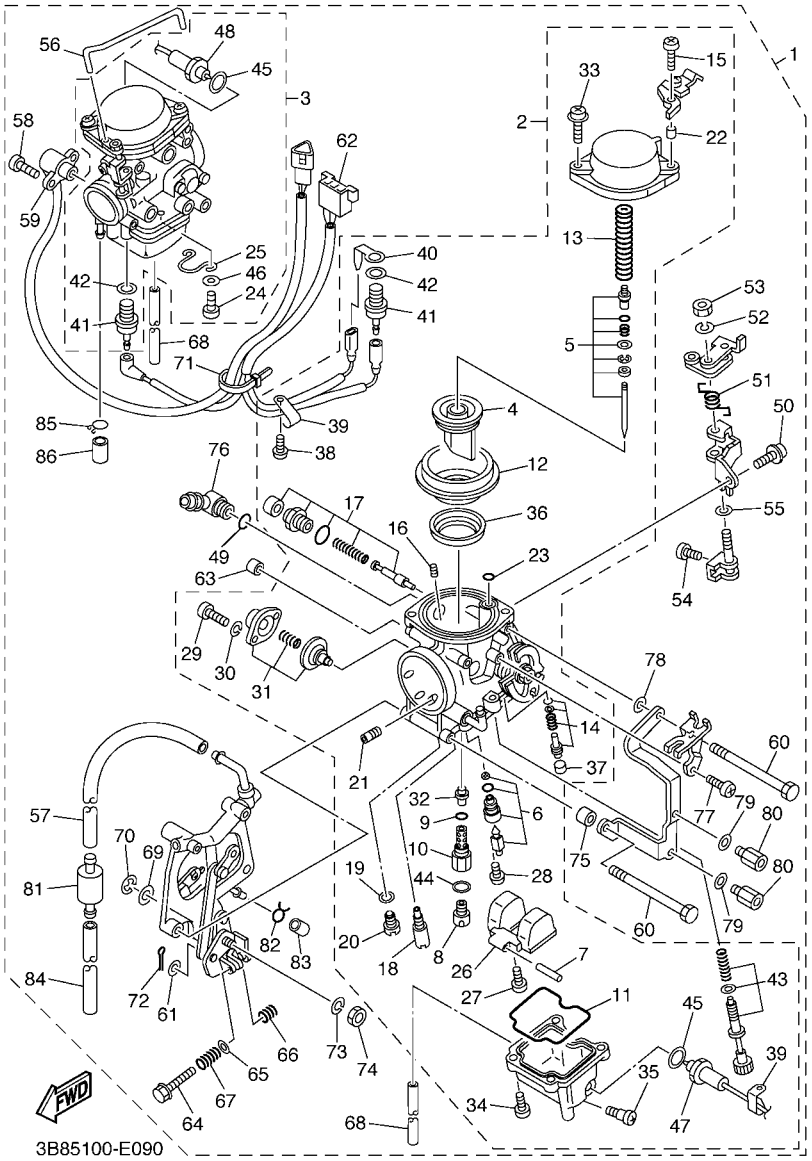

FIG. 9 CARBURETOR

REF. NO.	PART NO.	DESCRIPTION	23S6	23S7				REMARKS
78	92902–06600	.WASHER, PLATE	1	1				
79	1FK–14179–00	.WASHER, STARTER LEVER	2	2				
80	5EL–14592–10	.SCREW	2	2				
81	4X7–2149Y–00	.FILTER ASSY	1	1				
82	8A7–14139–00	.CLIP, PIPE	1	1				
83	895–14169–00	.CAP	1	1				
84	5EL–14987–20	.HOSE	1	1				
85	55X–14937–00	.CLIP	1					
86	5GK–1491A–00	.CAP	1					

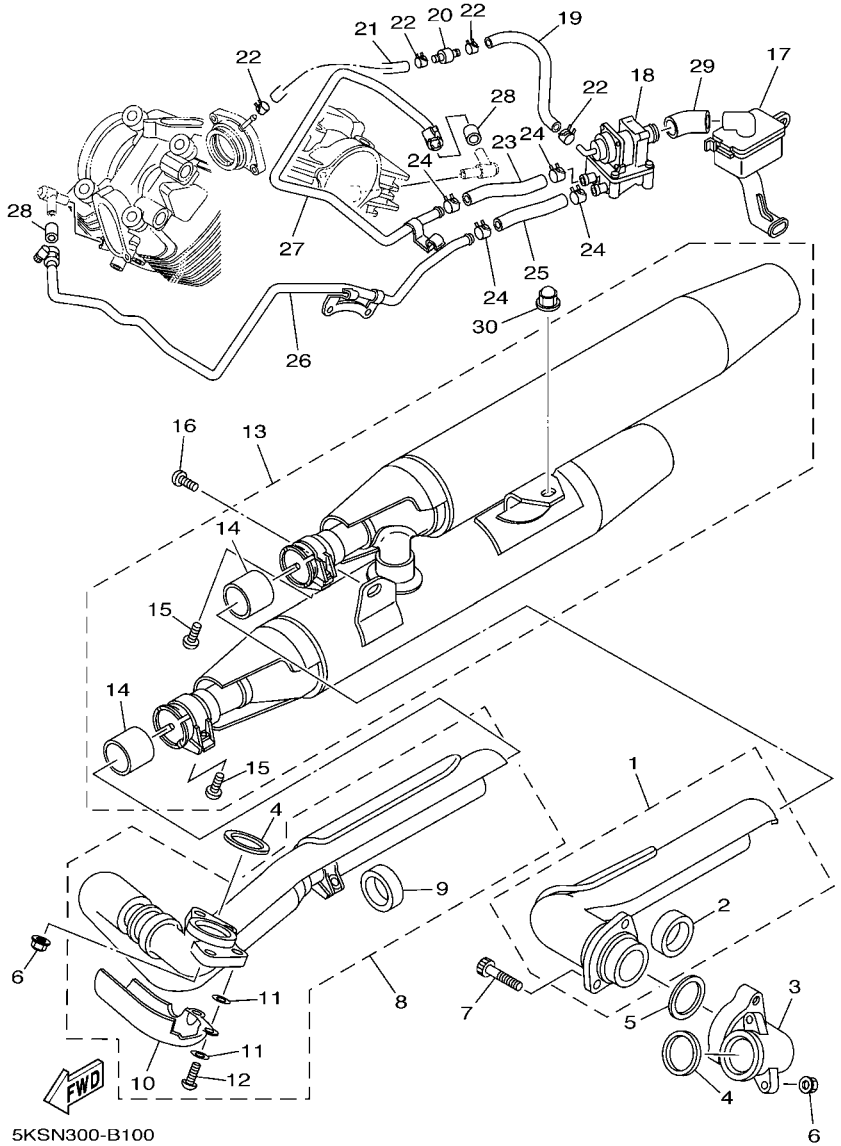

FIG. 10 EXHAUST

REF. NO.	PART NO.	DESCRIPTION	23S6	23S7				REMARKS
1	5EL–14610–10	EXHAUST PIPE ASSY 1	1	1				
2	4NK–14714–00	.GASKET, MUFFLER	1	1				
3	5EL–14615–01	JOINT, EXHAUST 1	1	1				
4	3EG–14613–00	GASKET, EXHAUST PIPE	2	2				
5	4TR–14613–00	GASKET, EXHAUST PIPE	1	1				
6	90185–08097	NUT, SELF-LOCKING	4	4				
7	91314–08035	BOLT, HEXAGON SOCKET HEAD	2	2				
8	5KS–14620–00	EXHAUST PIPE ASSY 2	1	1				
9	4NK–14714–00	.GASKET, MUFFLER	1	1				
10	5EL–14624–00	.COVER, EXHAUST	1	1				
11	90202–05191	.WASHER, PLATE	4	4				
12	98904–06014	.SCREW, BIND	2	2				
13	5YS–14710–00	MUFFLER ASSY 1	1	1				
14	5KS–14755–00	.GASKET, SILENCER	2	2				
15	92014–08025	.BOLT, BUTTON HEAD	2	2				
16	92017–10020	BOLT, BUTTON HEAD	1	1				
17	5EL–14806–00	AIR FILTER	1	1				
18	5EL–14803–10	AIR INDUCTION SYSTEM ASSY	1	1				
19	5EL–13544–01	HOSE, VACUUM SENSING 2	1	1				
20	41R–14489–00	NOZZLE	1	1				
21	5EL–13542–00	HOSE, VACUUM SENSING 1	1	1				
22	90467–08092	CLIP	4	4				
23	5EL–14882–00	HOSE, BEND 2	1	1				
24	90468–08104	CLIP	4	4				
25	5EL–14884–00	HOSE, BEND 4	1	1				
26	5EL–14872–00	PIPE 2	1	1				
27	5EL–14871–00	PIPE 1	1	1				

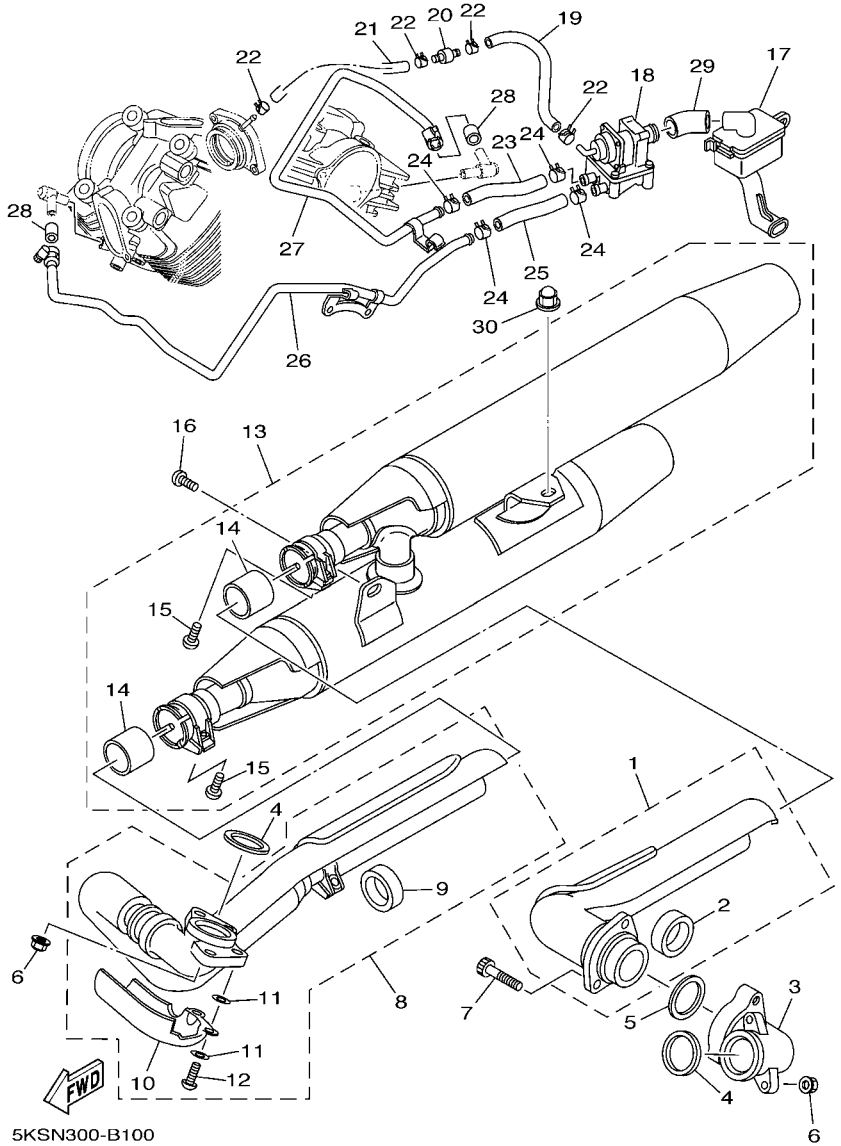

FIG. 10 EXHAUST

REF. NO.	PART NO.	DESCRIPTION	23S6	23S7				REMARKS
28	4KM–14714–01	GASKET, MUFFLER	2	2				
29	5EL–14881–00	HOSE, BEND 1	1	1				
30	90176–10075	NUT, CROWN	1	1				

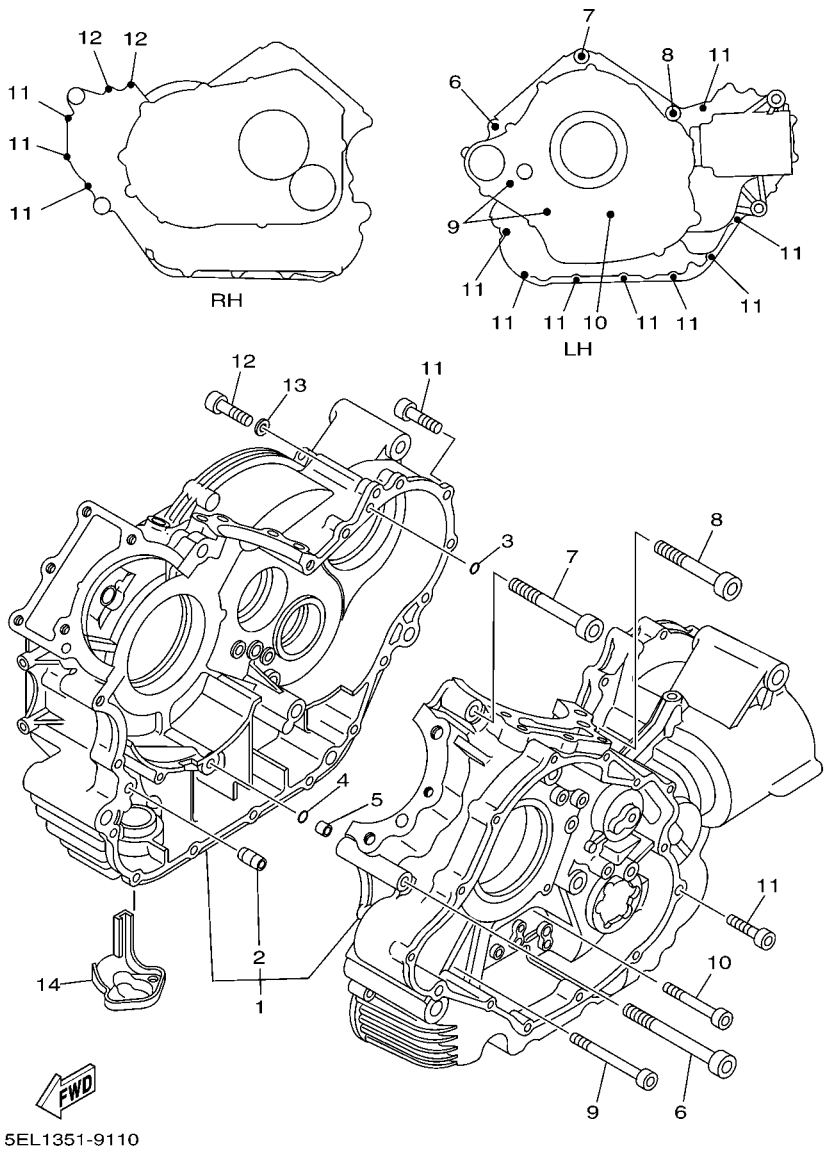

FIG. 11 CRANKCASE

REF. NO.	PART NO.	DESCRIPTION	23S6	23S7				REMARKS
1	5YS–15100–00	CRANKCASE ASSY	1	1				
2	99530–14016	.PIN, DOWEL	3	3				
3	93210–07135	O-RING	1	1				
4	93210–07135	O-RING	1	1				
5	90387–064E8	COLLAR	1	1				
6	91317–10100	BOLT	1	1				
7	91317–10070	BOLT	1	1				
8	91317–10060	BOLT	1	1				
9	91317–06080	BOLT	2	2				
10	91317–06055	BOLT	1	1				
11	91317–06030	BOLT	11	11				
12	91314–06030	BOLT, HEXAGON SOCKET HEAD	2	2				
13	90430–06014	GASKET	1	1				
14	4X7–15491–00	PROTECTOR	1	1				

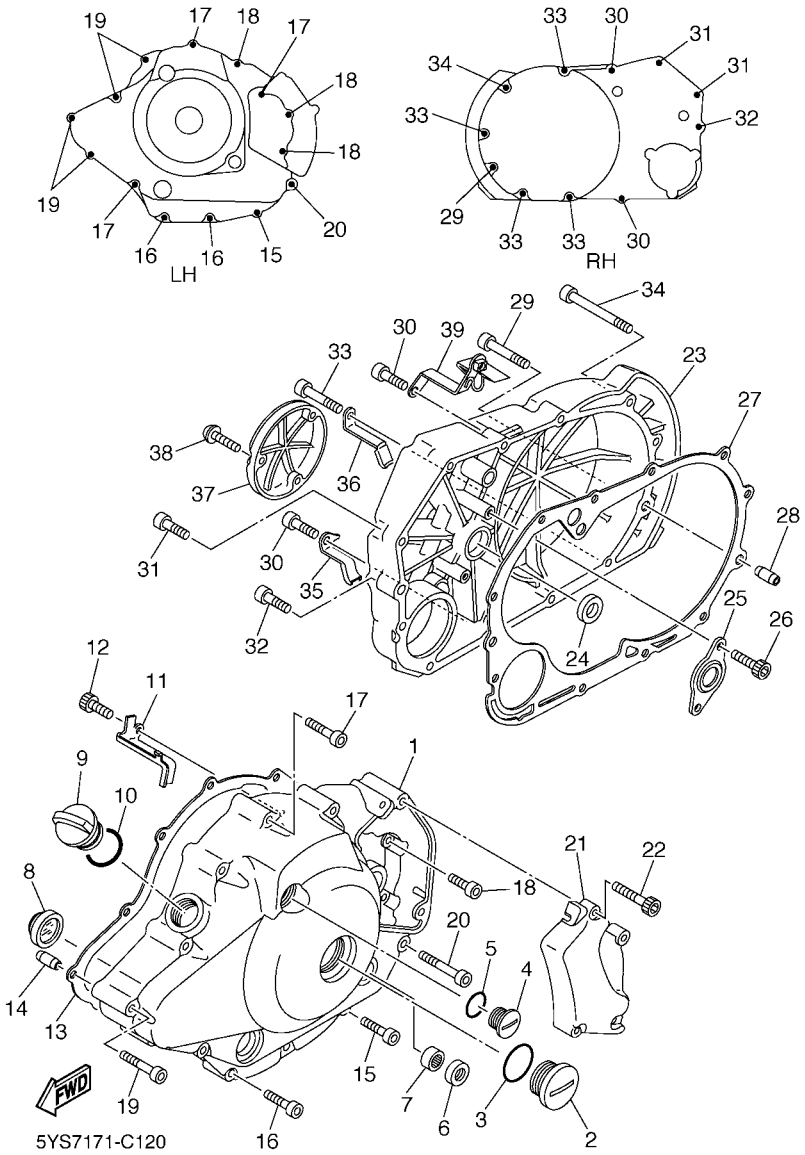

FIG. 12 CRANKCASE COVER 1

REF. NO.	PART NO.	DESCRIPTION	23S6	23S7				REMARKS
1	5EL–15411–00	COVER, CRANKCASE 1	1	1				
2	90340–32140	PLUG, STRAIGHT SCREW	1	1				
3	93210–32172	O-RING	1	1				
4	90340–14153	PLUG, STRAIGHT SCREW	1	1				
5	93210–14369	O-RING	1	1				
6	93102–12106	OIL SEAL (SD 12-22-5 HS)	1	1				
7	93317–21236	BEARING	1	1				
8	2H7–15361–00	GAUGE, LEVEL	1	1				
9	3F9–15362–00	PLUG, OIL LEVEL	1	1				
10	93210–27370	O-RING	1	1				
11	5EL–15484–00	CLAMP 2	1	1				
12	91317–06012	BOLT	1	1				
13	5EL–15451–00	GASKET, CRANKCASE COVER 1	1	1				
14	99530–10114	PIN, DOWEL	2	2				
15	91314–06035	BOLT, HEXAGON SOCKET HEAD	1	1				
16	91314–06030	BOLT, HEXAGON SOCKET HEAD	2	2				
17	91314–06045	BOLT, HEXAGON SOCKET HEAD	3	3				
18	90110–06003	BOLT, HEXAGON SOCKET HEAD	3	3				
19	91314–06055	BOLT, HEXAGON SOCKET HEAD	4	4				
20	91314–06065	BOLT, HEXAGON SOCKET HEAD	1	1				
21	5EL–15417–00	COVER, CAP	1	1				
22	91314–06030	BOLT, HEXAGON SOCKET HEAD	3	3				
23	5EL–15421–00	COVER, CRANKCASE 2	1	1				
24	93101–14102	OIL SEAL	1	1				
25	4X7–15388–00	PLATE, BEARING COVER	1	1				
26	91314–06016	BOLT, HEXAGON SOCKET HEAD	2	2				
27	5EL–15462–00	GASKET, CRANKCASE COVER 3	1	1				

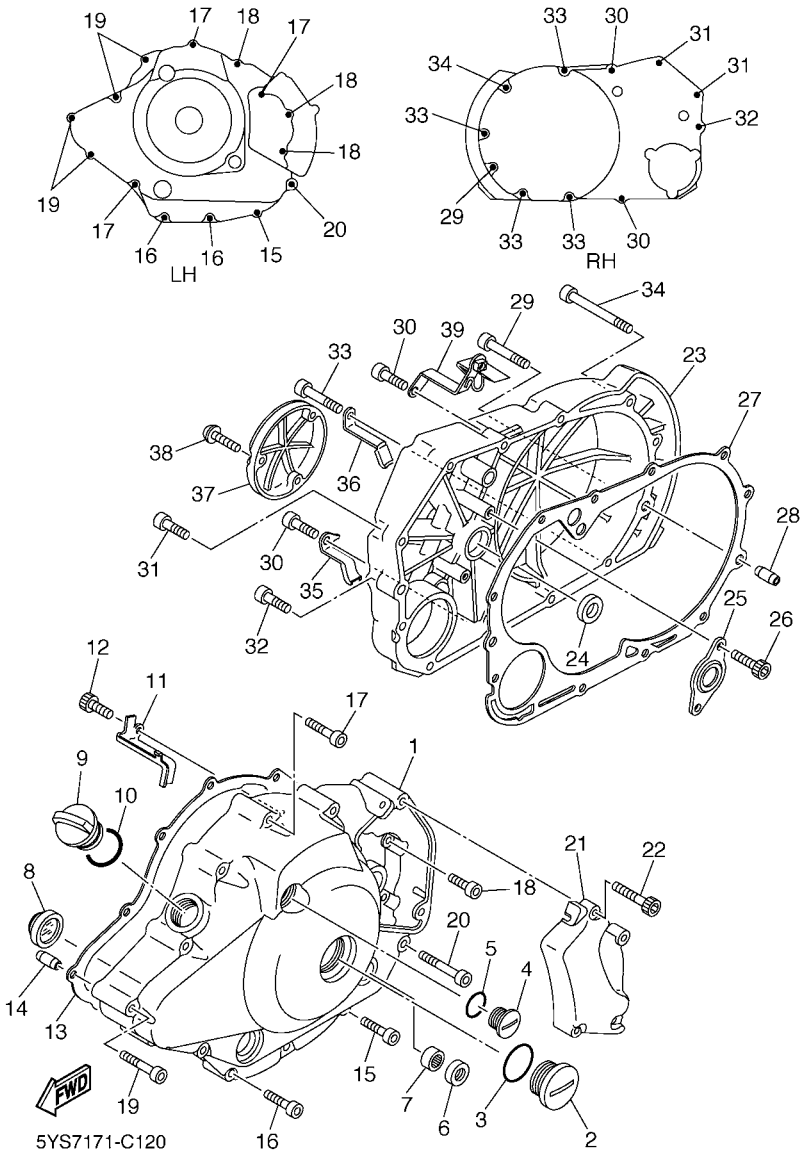

FIG. 12 CRANKCASE COVER 1

REF. NO.	PART NO.	DESCRIPTION	23S6	23S7				REMARKS
28	99530–10120	PIN, DOWEL	2	2				
29	91314–06060	BOLT, HEXAGON SOCKET HEAD	1	1				
30	91314–06035	BOLT, HEXAGON SOCKET HEAD	2	2				
31	90110–06006	BOLT, HEXAGON SOCKET HEAD	2	2				
32	91314–06040	BOLT, HEXAGON SOCKET HEAD	1	1				
33	91314–06055	BOLT, HEXAGON SOCKET HEAD	4	4				
34	90110–06111	BOLT, HEXAGON SOCKET HEAD	1	1				
35	90462–10003	CLAMP	1	1				
36	90462–10247	CLAMP	1	1				
37	5EL–15423–00	COVER 2	1	1				
38	92014–06020	BOLT, BUTTON HEAD	3	3				
39	5EL–14413–00	STAY	1	1				

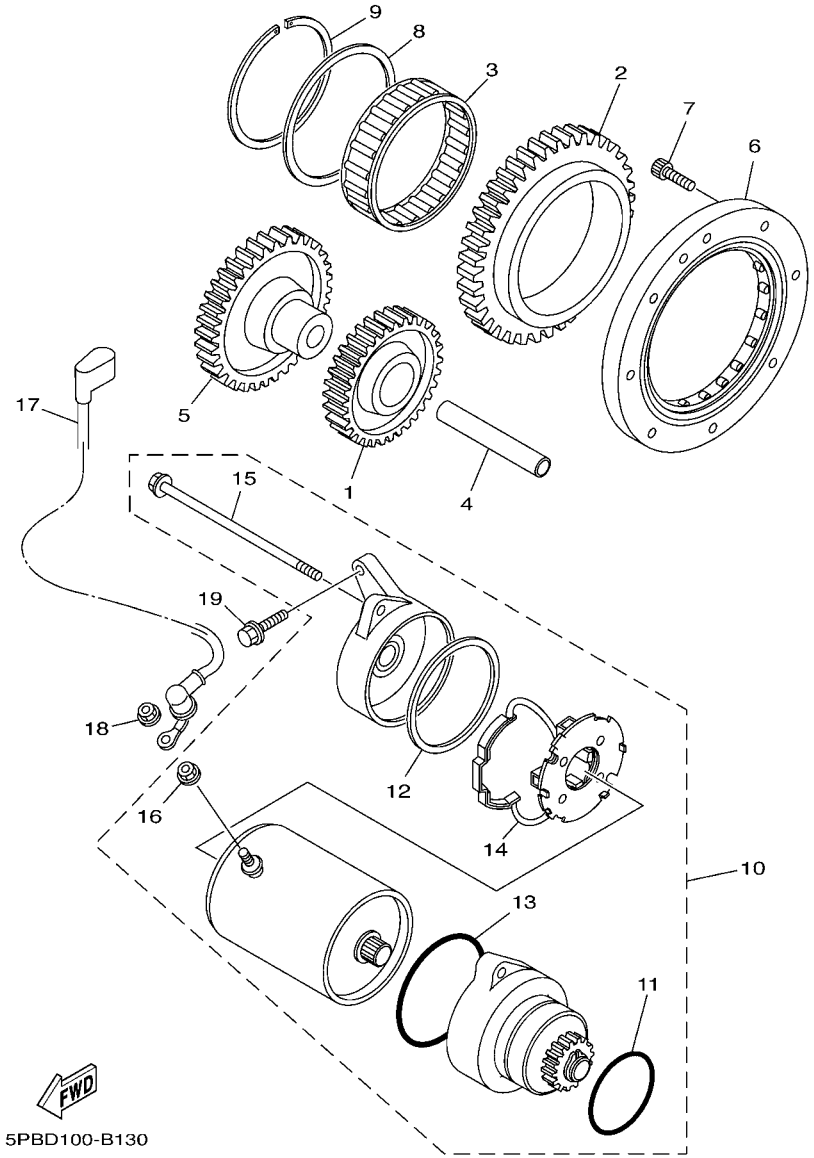

FIG. 13 STARTER

REF. NO.	PART NO.	DESCRIPTION	23S6	23S7				REMARKS
1	5EL–15515–00	GEAR 3	1	1				
2	5EL–15517–11	GEAR, IDLER 2	1	1				
3	93310–5720G	BEARING	1	1				
4	24W–15521–00	SHAFT 1	1	1				
5	5EL–15512–00	GEAR, IDLER 1	1	1				
6	5EL–15590–00	STARTER ONE-WAY ASSY	1	1				
7	91317–06016	BOLT	8	8				
8	90201–72008	WASHER, PLATE	1	1				
9	93440–68180	CIRCLIP	1	1				
10	5EL–81890–01	MOTOR ASSY	1	1				
11	1J7–81847–60	.O-RING	1	1				
12	11H–81844–00	.GASKET	1	1				
13	5A8–81847–10	.O-RING	1	1				
14	5A8–81840–10	.BRUSH HOLDER ASSY	1	1				
15	5A8–81826–10	.BOLT	2	2				
16	4XV–8182A–00	.NUT	1	1				
17	5EL–81815–00	CORD, STARTER MOTOR	1	1				
18	4XV–8182A–00	NUT	1	1				
19	95814–06025	BOLT, FLANGE	2	2				

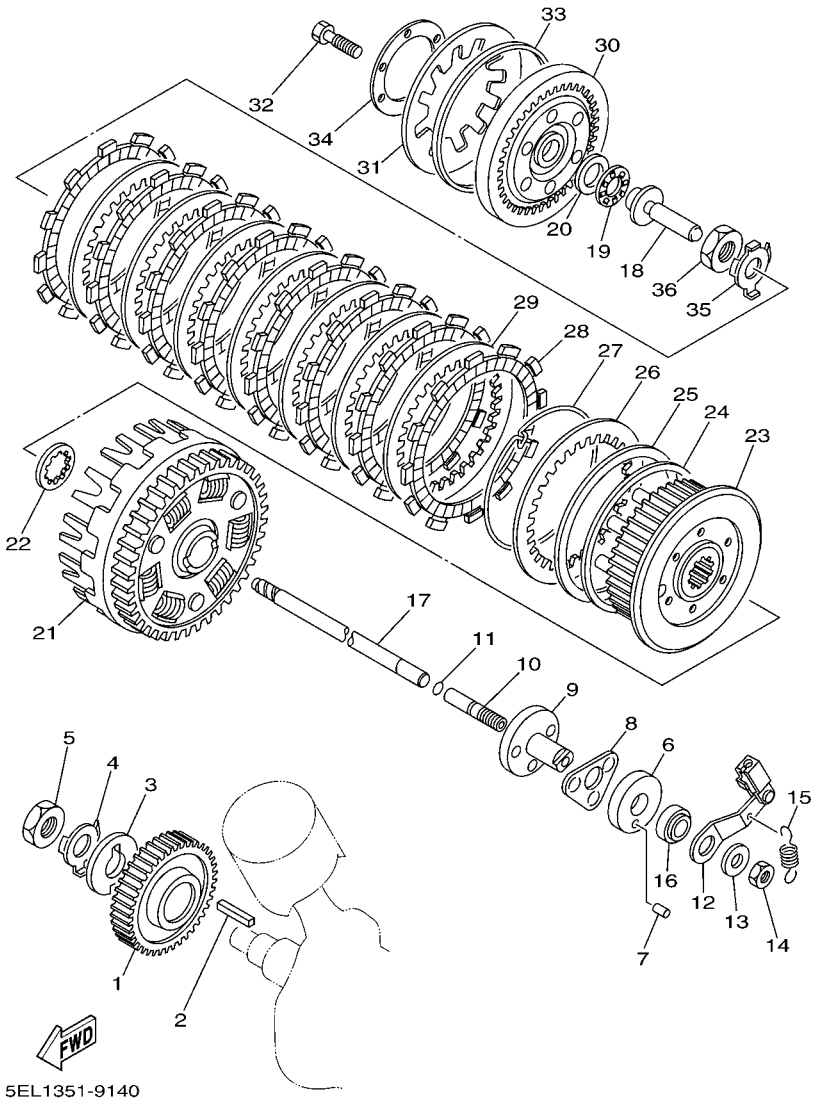

FIG. 14 CLUTCH

REF. NO.	PART NO.	DESCRIPTION	23S6	23S7				REMARKS
1	4X7–16111–00	GEAR, PRIMARY DRIVE (47T)	1	1				
2	90282–07042	KEY, STRAIGHT	1	1				
3	90214–20022	WASHER, CLAW	1	1				
4	90215–20182	WASHER, LOCK	1	1				
5	90170–20274	NUT	1	1				
6	2H7–16396–00	HOUSING, PUSH SCREW	1	1				
7	93606–07082	PIN, DOWEL	1	1				
8	2H7–16395–01	RETAINER, BALL	1	1				
9	2H7–16341–00	SCREW, PUSH	1	1				
10	2H7–16343–00	SCREW, ADJUSTING	1	1				
11	93210–48364	O-RING	1	1				
12	5EL–16340–01	PUSH LEVER ASSY	1	1				
13	92907–08200	WASHER	1	1				
14	95307–08700	NUT	1	1				
15	90506–10069	SPRING, TENSION	1	1				
16	93104–14059	OIL SEAL	1	1				
17	5EL–16357–00	ROD, PUSH 2	1	1				
18	4X7–16356–00	ROD, PUSH 1	1	1				
19	93340–21505	BEARING	1	1				
20	90201–151A7	WASHER, PLATE (T=1.0)	1	1				
21	4X7–16150–02	PRIMARY DRIVEN GEAR COMP.	1	1				
22	2JN–16154–00	PLATE, THRUST 1	1	1				
23	5EL–16371–00	BOSS, CLUTCH	1	1				
24	4X7–16384–00	PLATE, SEAT	1	1				
25	4X7–16383–01	SPRING, CLUTCH BOSS	1	1				
26	4X7–16324–00	PLATE, CLUTCH 1	1	1				
27	4X7–16385–00	RING, CLUTCH BOSS	1	1				

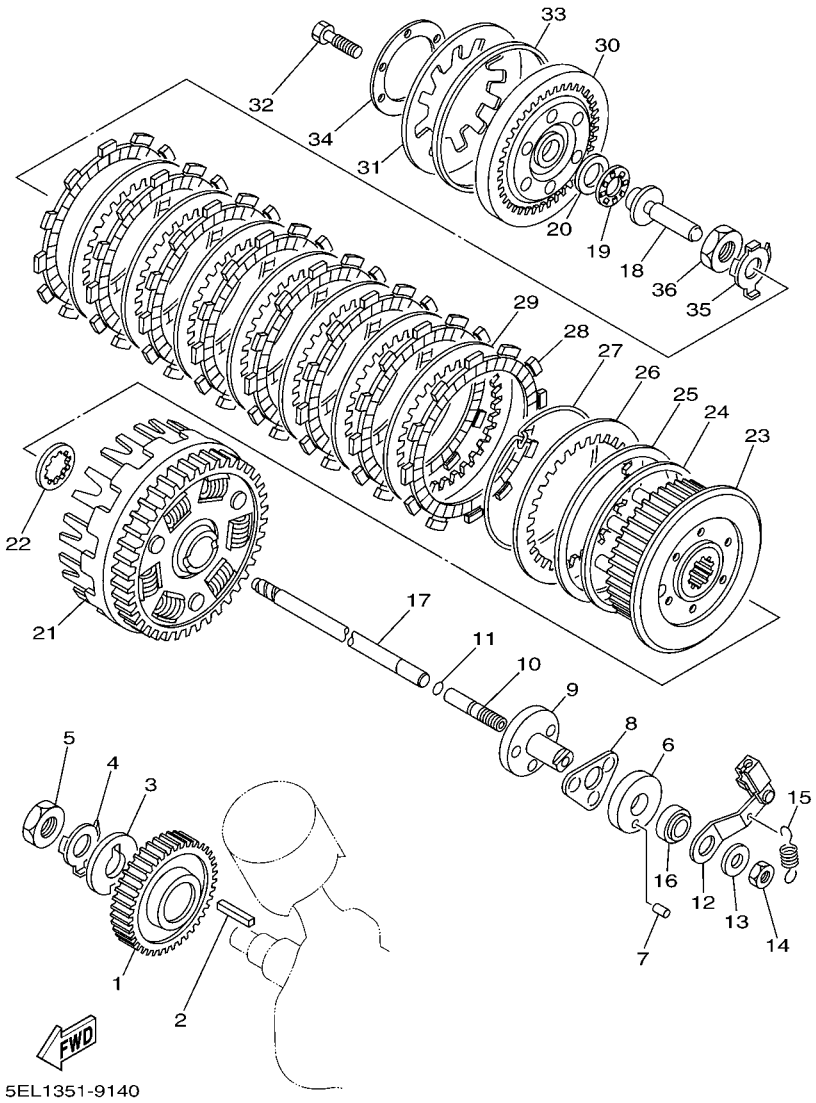

FIG. 14 CLUTCH

REF. NO.	PART NO.	DESCRIPTION	23S6	23S7				REMARKS
28	22U–16321–00	PLATE, FRICTION	8	8				
29	1TA–16325–00	PLATE, CLUTCH 2	7	7				
30	1TA–16351–01	PLATE, PRESSURE 1	1	1				
31	1TA–16334–00	SPRING, CLUTCH 2	1	1				
32	97027–06025	BOLT, HEXAGON	6	6				
33	1TA–16335–00	HOUSING, SPRING	1	1				
34	1TA–16352–00	PLATE, PRESSURE 2	1	1				
35	90215–20170	WASHER, LOCK	1	1				
36	90170–20257	NUT	1	1				

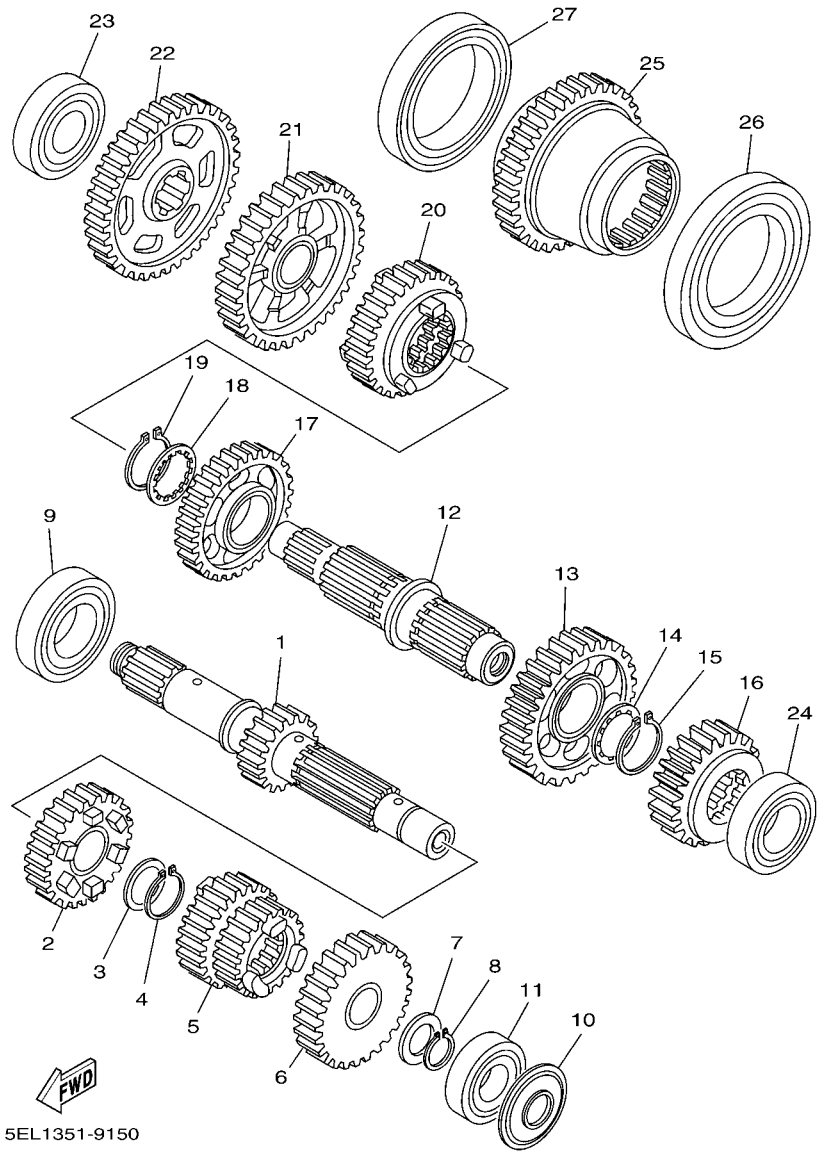

FIG. 15 TRANSMISSION

REF. NO.	PART NO.	DESCRIPTION	23S6	23S7				REMARKS
1	5EL–17411–00	AXLE, MAIN (17T)	1	1				
2	5EL–17141–00	GEAR, 4TH PINION (31T)	1	1				
3	90209–21332	WASHER	1	1				
4	99009–25400	CIRCLIP	1	1				
5	5EL–17121–00	GEAR, 2ND PINION (24T/28T)	1	1				
6	5EL–17151–00	GEAR, 5TH PINION (34T)	1	1				
7	90201–20276	WASHER, PLATE (T=1.0)	1	1				
8	99009–20400	CIRCLIP	1	1				
9	93306–30525	BEARING	1	1				
10	93104–20068	OIL SEAL	1	1				
11	93306–30424	BEARING	1	1				
12	5EL–17402–00	DRIVE AXLE ASSY	1	1				
13	5EL–17221–00	GEAR, 2ND WHEEL (40T)	1	1				
14	90209–28331	WASHER	1	1				
15	93440–31172	CIRCLIP	1	1				
16	5EL–17251–00	GEAR, 5TH WHEEL (29T)	1	1				
17	5EL–17231–00	GEAR, 3RD WHEEL (36T)	1	1				
18	90209–28331	WASHER	1	1				
19	93440–31172	CIRCLIP	1	1				
20	5EL–17241–00	GEAR, 4TH WHEEL (32T)	1	1				
21	4X7–17211–00	GEAR, 1ST WHEEL (40T)	1	1				
22	5EL–17582–00	GEAR, MIDDLE DRIVE (47T)	1	1				
23	93306–20401	BEARING	1	1				
24	93306–20550	BEARING	1	1				
25	5EL–17583–00	GEAR, MIDDLE DRIVEN (25T)	1	1				
26	93316–01201	BEARING	1	1				
27	93306–91201	BEARING	1	1				

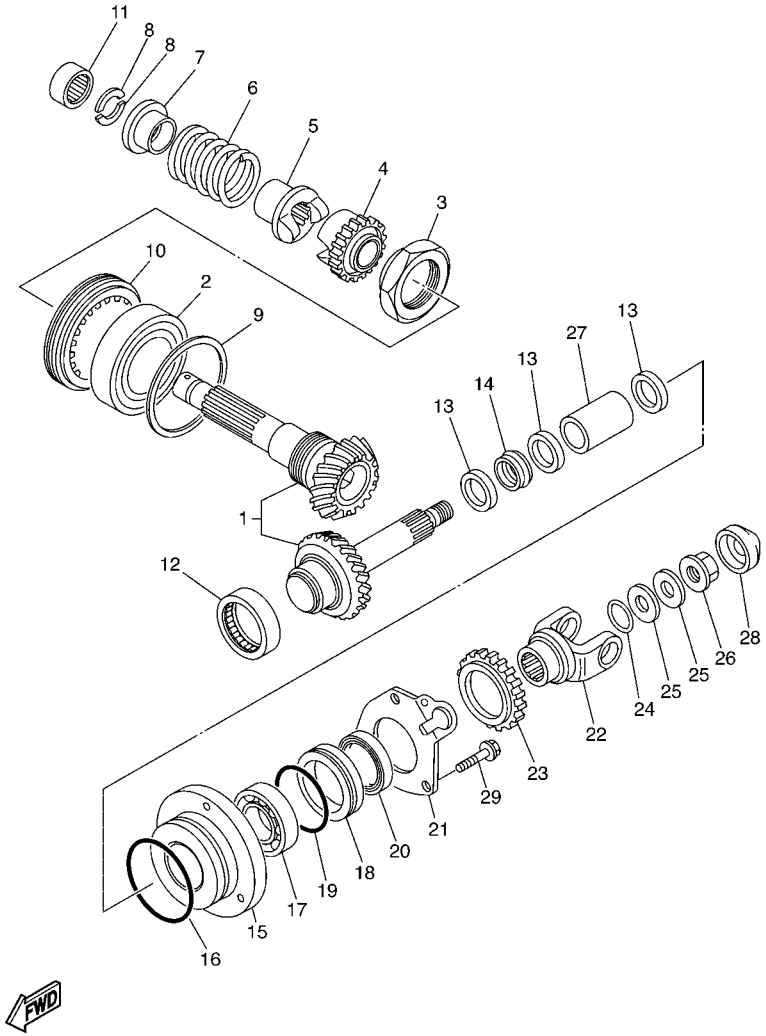

3B8D100-G160

FIG. 16 MIDDLE DRIVE GEAR

REF. NO.	PART NO.	DESCRIPTION	23S6	23S7				REMARKS
1	5EL–Y1757–10	MIDDLE GEAR COMP.	1	1				
2	93306–20901	BEARING	1	1				
3	90179–44328	NUT	1	1				
4	42X–17526–01	CAM, DRIVE	1	1				
5	31A–17527–00	CAM, DRIVEN	1	1				
6	90501–70762	SPRING, COMPRESSION	1	1				
7	4X7–17524–00	HOLDER	1	1				
8	3H5–17529–00	WASHER, THRUST	2	2				
9	4X7–17531–00–15	SHIM, PINION (0.15T)	1	1				UR
	4X7–17531–00–30	SHIM, PINION (0.30T)	1	1				UR
	4X7–17531–00–40	SHIM, PINION (0.40T)	1	1				UR
	4X7–17531–00–50	SHIM, PINION (0.50T)	1	1				UR
10	90179–88336	NUT	1	1				
11	93317–22021	BEARING	1	1				
12	93311–44051	BEARING	1	1				
13	90201–255A6	WASHER, PLATE	3	3				
14	1J7–46129–Y1	SPACER, EXPANSION	1	1				
15	4X7–17551–00	HOUSING, BEARING	1	1				
16	93210–71360	O-RING	1	1				
17	93306–20548	BEARING	1	1				
18	4X7–17554–00	RETAINER, BEARING	1	1				
19	93210–52449	O-RING	1	1				
20	93101–35099	OIL SEAL	1	1				
21	5EL–17558–00	PLATE, BEARING	1	1				
22	3B8–17556–00	YOKE, JOINT	1	1				
23	5EL–8135E–00	ROTOR	1	1				
24	93210–16001	O-RING	1	1				

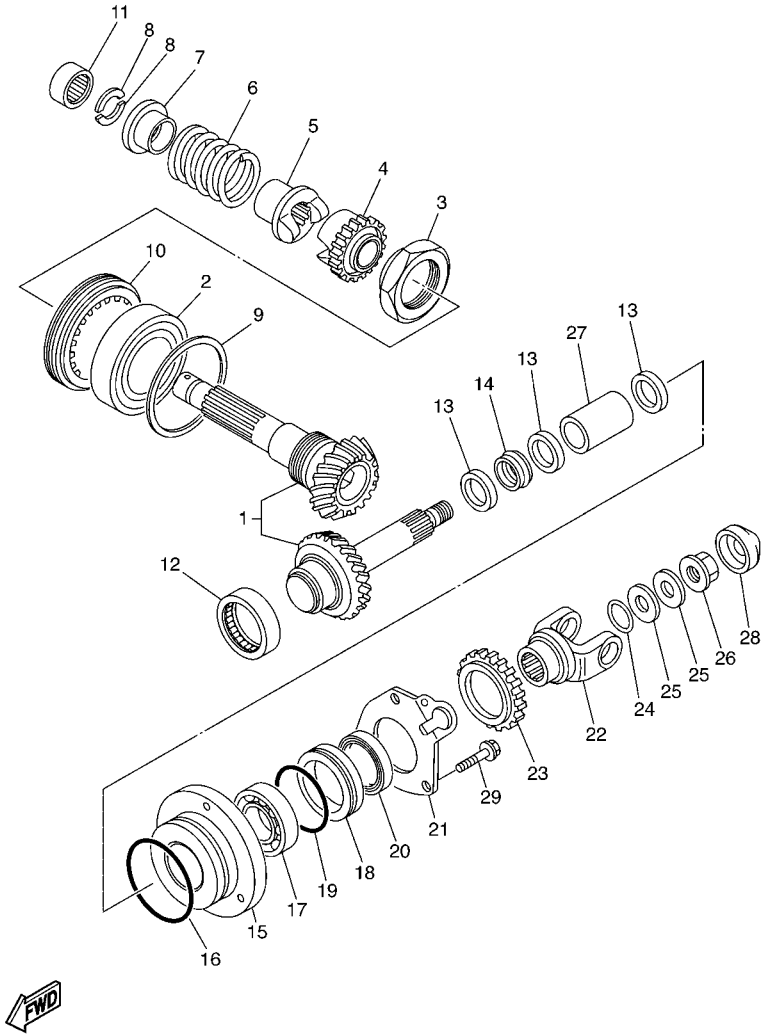

3B8D100-G160

FIG. 16 MIDDLE DRIVE GEAR

REF. NO.	PART NO.	DESCRIPTION	23S6	23S7				REMARKS
25	90201–16028	WASHER, PLATE	2	2				
26	90179–16013	NUT	1	1				
27	90387–251E1	COLLAR	1	1				
28	3B8–17631–00	CAP	1	1				
29	90105–08010	BOLT, FLANGE	3	3				

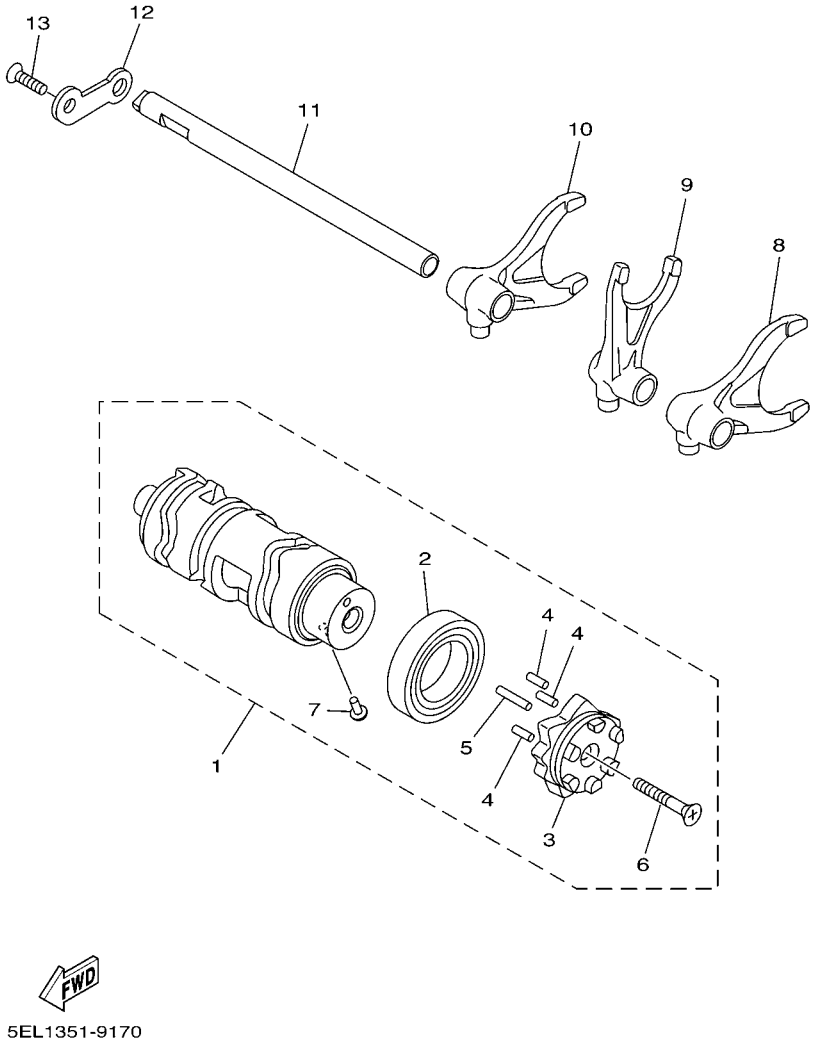

FIG. 17 SHIFT CAM & FORK

REF. NO.	PART NO.	DESCRIPTION	23S6	23S7				REMARKS
1	5EL–18540–00	SHIFT CAM ASSY	1	1				
2	93306–90602	.BEARING	1	1				
3	5EL–18185–00	.SEGMENT	1	1				
4	93604–16092	.PIN, DOWEL	3	3				
5	93604–20156	.PIN, DOWEL	1	1				
6	90151–05027	.SCREW, COUNTERSUNK	1	1				
7	136–18542–00	.POINT, NEUTRAL	1	1				
8	5EL–18511–00	FORK, SHIFT 1	1	1				
9	5EL–18512–00	FORK, SHIFT 2	1	1				
10	5EL–18513–00	FORK, SHIFT 3	1	1				
11	5EL–18531–00	BAR, SHIFT FORK GUIDE 1	1	1				
12	4X7–18536–00	STOPPER, SHIFT BAR	1	1				
13	90151–06041	SCREW, COUNTERSUNK	2	2				

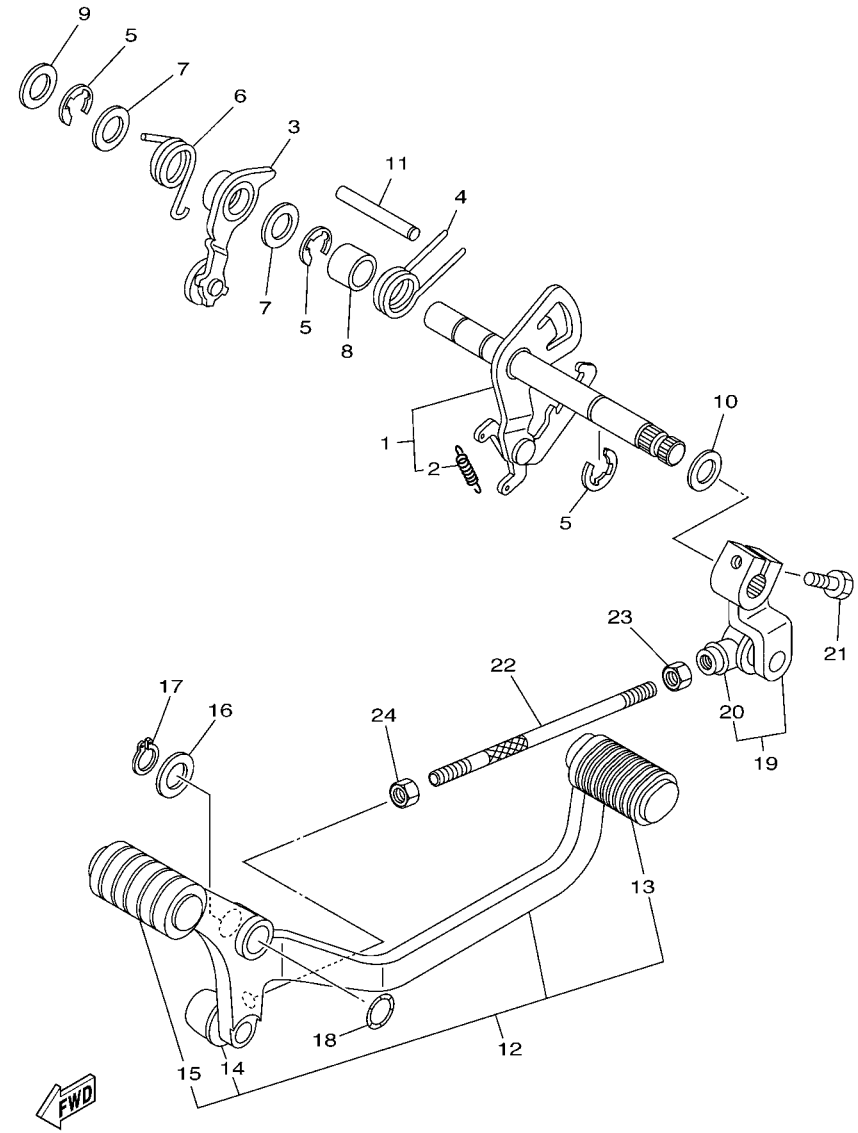

5KSC100-A181

FIG. 18 SHIFT SHAFT

REF. NO.	PART NO.	DESCRIPTION	23S6	23S7				REMARKS
1	5EL–18120–00	SHIFT LEVER ASSY	1	1				
2	90506–08227	.SPRING, TENSION	1	1				
3	5EL–18140–00	STOPPER LEVER ASSY	1	1				
4	90508–32535	SPRING, TORSION	1	1				
5	99001–10600	CIRCLIP	3	3				
6	90508–32012	SPRING, TORSION	1	1				
7	90201–12588	WASHER, PLATE	2	2				
8	90387–124F4	COLLAR	1	1				
9	90201–12588	WASHER, PLATE	1	1				
10	90201–12166	WASHER, PLATE	1	1				
11	93608–50158	PIN, DOWEL	1	1				
12	5KS–18110–00	SHIFT PEDAL ASSY	1	1				
13	22N–18113–00	.COVER, SHIFT PEDAL	1	1				
14	2H9–18154–00	.COVER, DUST	1	1				
15	4NK–18113–10	.COVER, SHIFT PEDAL	1	1				
16	90201–12688	WASHER, PLATE	1	1				
17	99009–12400	CIRCLIP	1	1				
18	90206–12074	WASHER, WAVE	1	1				
19	4TR–18112–00	ARM, SHIFT	1	1				
20	2H9–18154–00	.COVER, DUST	1	1				
21	97024–06020	BOLT	1	1				
22	4DN–18115–20	ROD, SHIFT	1	1				
23	90170–06228	NUT(COUNTER CLOCKWISE)	1	1				
24	95304–06700	NUT	1	1				

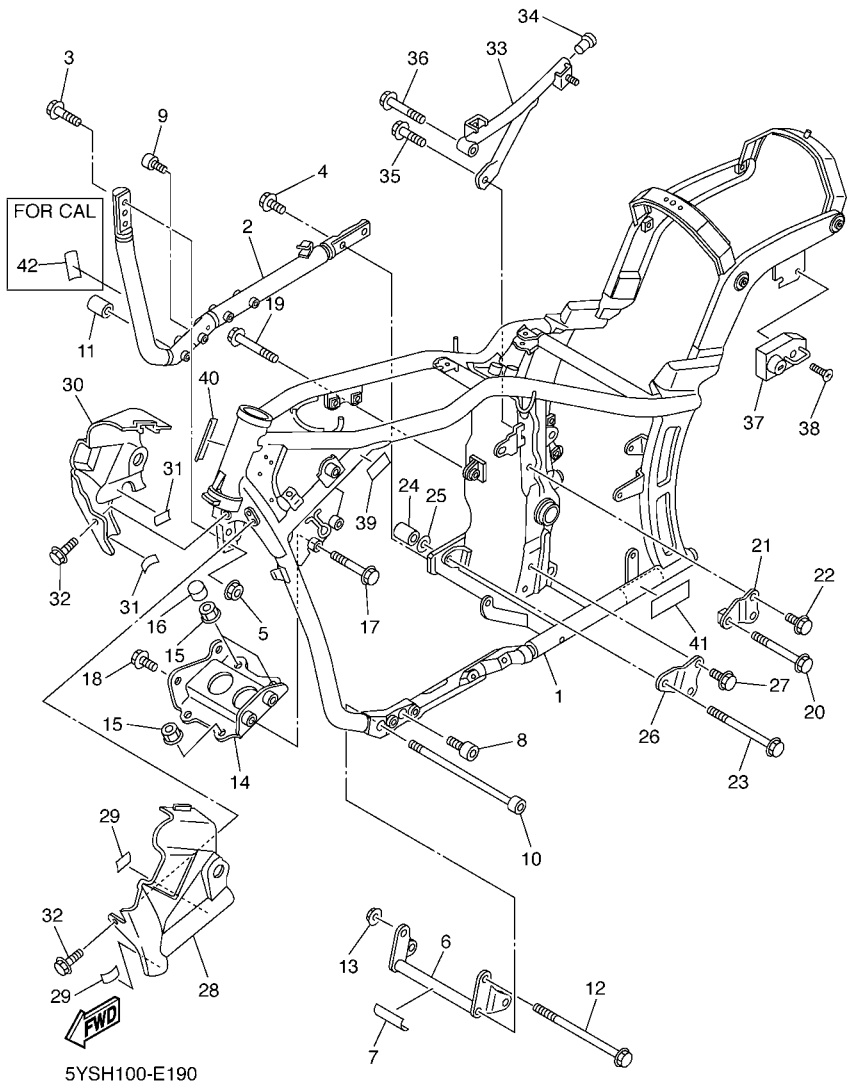

FIG. 19 FRAME

REF. NO.	PART NO.	DESCRIPTION	23S6	23S7				REMARKS
1	5KS–21110–71	FRAME COMP.	1	1				
2	5EL–21150–00	DOWN TUBE COMP.2	1	1				
3	90105–10009	BOLT, FLANGE	2	2				
4	90105–10004	BOLT, FLANGE	2	2				
5	95607–10200	NUT, U FLANGE	2	2				
6	5EL–21318–00	STAY, ENGINE 5	1	1				
7	4DN–21268–00	SEAL	1	1				
8	91317–10020	BOLT	1	1				
9	91317–10030	BOLT	1	1				
10	90110–10182	BOLT, HEXAGON SOCKET HEAD	1	1				
11	90179–10377	NUT	1	1				
12	90105–10781	BOLT, FLANGE	1	1				
13	95607–10200	NUT, U FLANGE	1	1				
14	5EL–21317–00	STAY, ENGINE 3	1	1				
15	90179–12657	NUT	4	4				
16	90331–14001	PLUG	2	2				
17	90105–100A4	BOLT, FLANGE	2	2				
18	90105–10003	BOLT, FLANGE	2	2				
19	90105–10013	BOLT, FLANGE	1	1				
20	90105–10299	BOLT, FLANGE	1	1				
21	5EL–21314–00	STAY, ENGINE 5	1	1				
22	95817–10016	BOLT, FLANGE	2	2				
23	90105–10444	BOLT, FLANGE	1	1				
24	90179–10377	NUT	1	1				
25	90201–101J1	WASHER, PLATE	1	1				
26	5EL–21316–00	STAY, ENGINE 3	1	1				
27	95817–10016	BOLT, FLANGE	2	2				

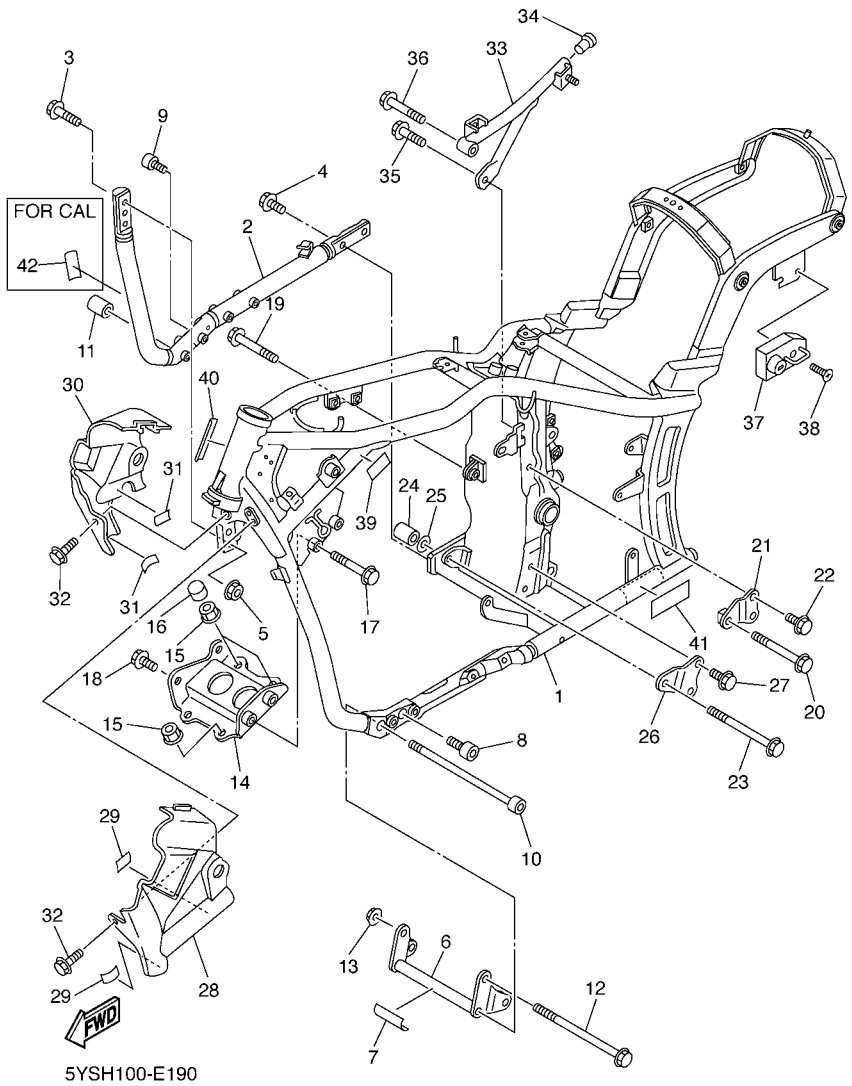

FIG. 19 FRAME

REF. NO.	PART NO.	DESCRIPTION	23S6	23S7				REMARKS
28	5EL–2171E–00	COVER, SIDE 5	1	1				
29	3BN–21747–00	DAMPER	2	2				
30	5EL–2171X–00	COVER, SIDE 6	1	1				
31	3BN–21747–00	DAMPER	2	2				
32	90119–06236	BOLT, WITH WASHER	2	2				
33	5KS–21460–00	STAY, MUFFLER	1	1				
34	90338–16148	PLUG	1	1				
35	95817–08020	BOLT, FLANGE	1	1				
36	95817–08045	BOLT, FLANGE	1	1				
37	4R8–21308–01	HELMET HANGER ASSY	1	1				
38	90151–06018	SCREW, COUNTERSUNK	1	1				
39	3SP–21732–00	SEAL 1	1	1				
40	3HA–24141–00	PROTECTOR, FUEL TANK	1	1				
41	5P9–2179W–10	PLATE, EPA (NON CALIFORNIA)	1					
	5P9–2176P–10	PLATE, EPA (CALIFORNIA)		1				
42	5EL–21686–00	PLATE, ROUTING 2		1				

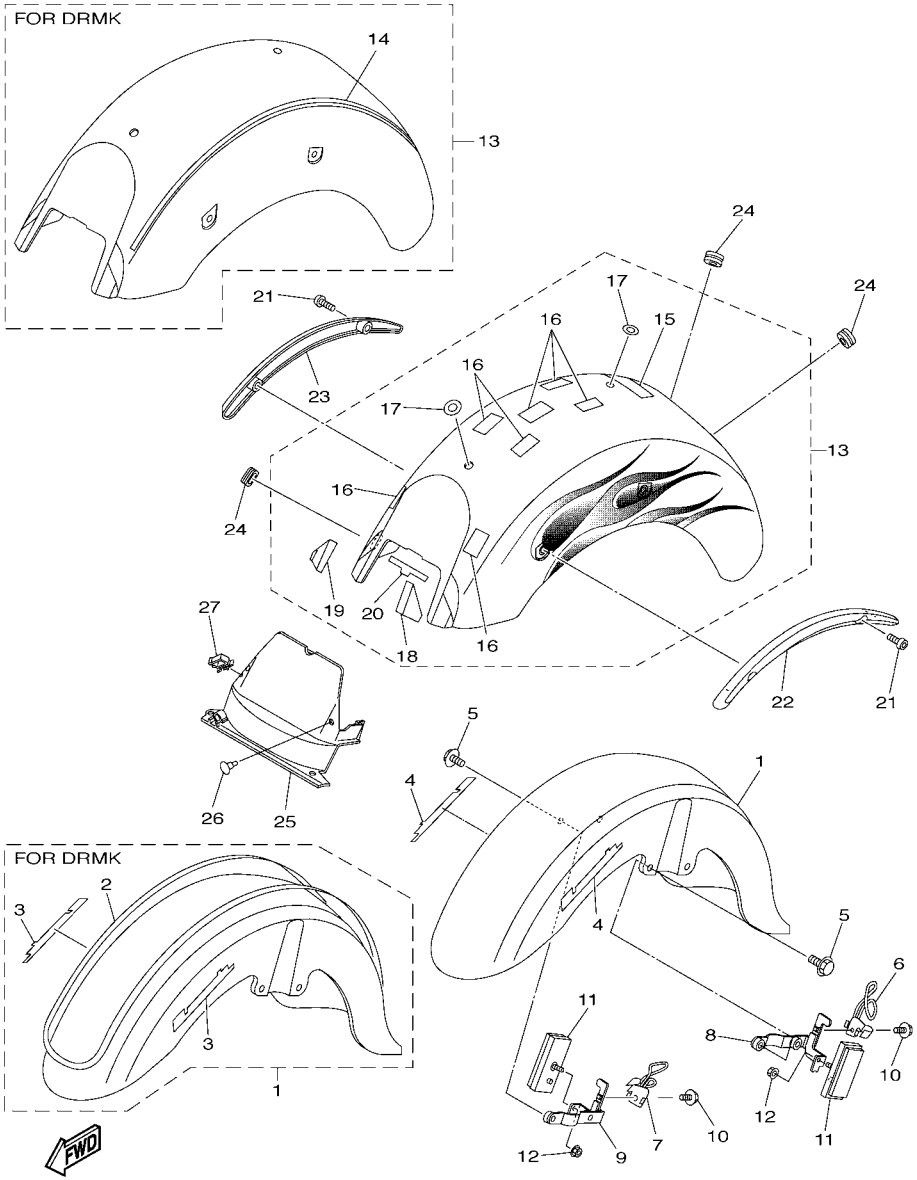

FIG. 20 FENDER

REF. NO.	PART NO.	DESCRIPTION	23S6	23S7				REMARKS
1	5KS–21510–00–P6	FRONT FENDER COMP.	1	1				UR FOR DBNM8
	5KS–Y2151–2A–P5	FRONT FENDER ASSY	1	1				UR FOR DRMK
2	5YS–21570–A0	.GRAPHIC SET, FRONT FENDER	1	1				FOR DRMK
3	5BN–21565–00	.EMBLEM, 2	2	2				FOR DRMK
4	5BN–21565–00	EMBLEM, 2	2	2				
5	95817–08020	BOLT, FLANGE	4	4				
6	5KS–21597–00	HOLDER,WIRE 1	1	1				
7	5KS–21598–00	HOLDER, WIRE 2	1	1				
8	5KS–21587–00	STAY 1	1	1				
9	5KS–21588–00	STAY 2	1	1				
10	95807–06010	BOLT, FLANGE	2	2				
11	11H–85110–01	REFLECTOR ASSY	2	2				
12	95707–05500	NUT, FLANGE	2	2				
13	5KS–W216R–02–P6	REAR FENDER ASSY	1	1				UR FOR DBNM8
	5KS–W216R–01–P5	REAR FENDER ASSY	1	1				UR FOR DRMK
14	5YS–2165A–90	.GRAPHIC SET,REAR FENDER	1	1				
15	1D6–2153E–00	.EMBLEM, YAMAHA	1	1				
16	3SP–21732–00	.SEAL 1	7	7				
17	4NK–21735–00	.SEAL 2	2	2				
18	5KS–21669–00	.SEAL	1	1				
19	5KS–21669–10	.SEAL	1	1				
20	5KS–21669–20	.SEAL	1	1				
21	92014–08025	BOLT, BUTTON HEAD	4	4				
22	4WM–2164F–00	STAY 1	1	1				
23	4WM–2164G–00	STAY 2	1	1				
24	90480–15061	GROMMET	3	3				
25	5KS–21629–00	GUARD, MUD	1	1				

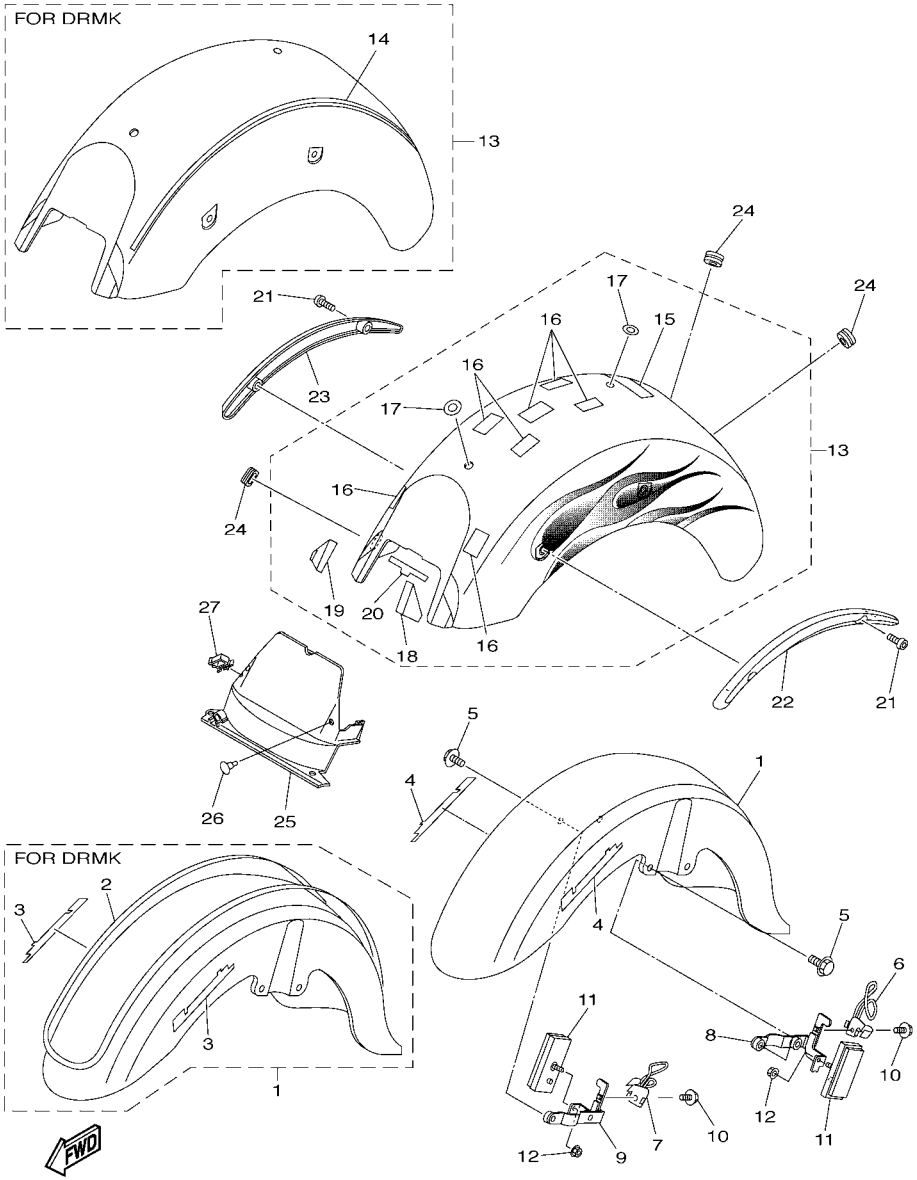

FIG. 20 FENDER

REF. NO.	PART NO.	DESCRIPTION	23S6	23S7				REMARKS
26	90269–07077	RIVET	2	2				
27	90464–16021	CLAMP	1	1				

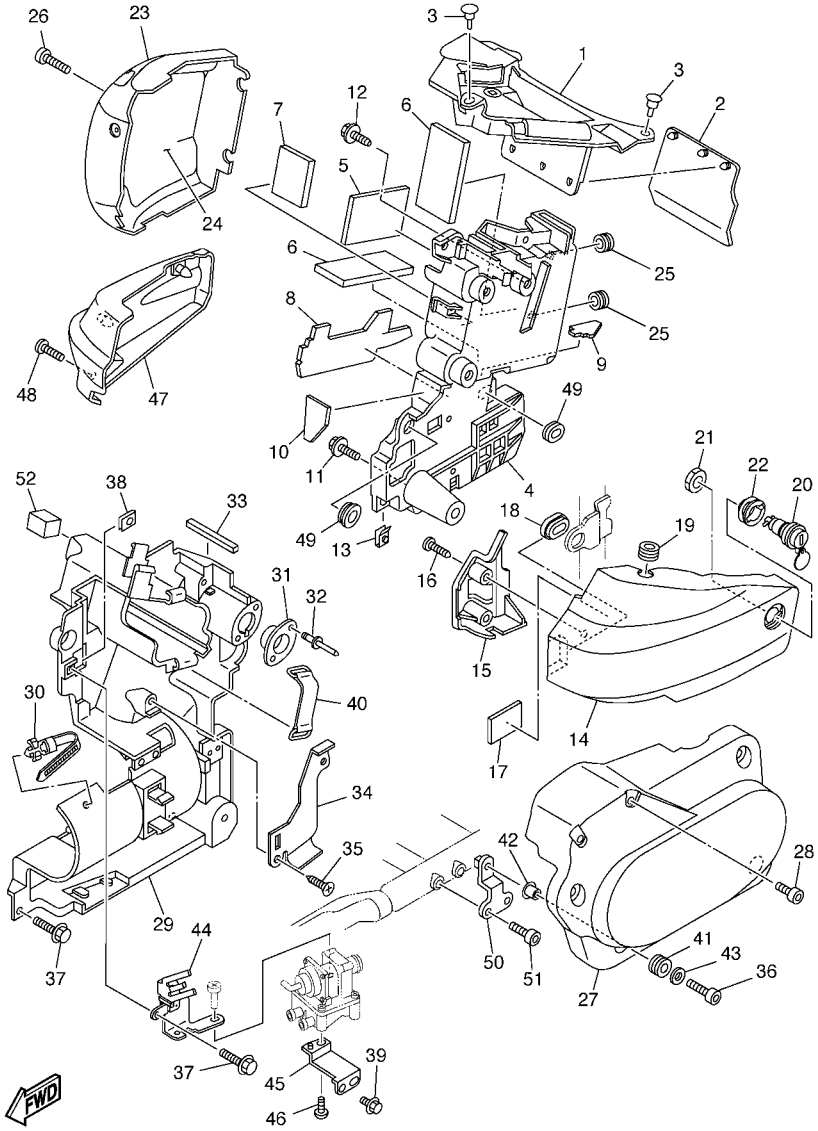

5YST110-F210

FIG. 21 SIDE COVER

REF. NO.	PART NO.	DESCRIPTION	23S6	23S7				REMARKS
1	5KS–2177B–00	LID, COVER	1	1				
2	30X–21621–00	FLAP	1	1				
3	90269–07077	RIVET	3	3				
4	5KS–2177G–00	BOX, BATTERY	1	1				
5	29N–14425–00	DAMPER 1	1	1				
6	5Y1–82122–00	SEAT, BATTERY	2	2				
7	M12–T133A–00	SEAT, DAMPER A	1	1				
8	5EL–2172A–10	PANEL 1	1	1				
9	5EL–2172F–00	PANEL 2	1	1				
10	5EL–2172G–00	PANEL 3	1	1				
11	90119–06096	BOLT, WITH WASHER	5	5				
12	90119–06226	BOLT, WITH WASHER	1	1				
13	90183–06053	NUT, SPRING	2	2				
14	5KS–21711–00–PD	COVER,SIDE 1	1	1				UR FOR DRMK
	5KS–21711–00–PH	COVER,SIDE 1	1	1				UR FOR DBNM8
15	5EL–2171Y–00	GRILLE, SIDE COVER 1	1	1				
16	97707–50014	SCREW, TRUSS HEAD TAPPING	2	2				
17	3YL–12232–00	DAMPER	1	1				
18	90480–01558	GROMMET	1	1				
19	90480–12550	GROMMET	1	1				
20	55K–21708–00	LOCK ASSY 2	1	1				
21	90170–22187	NUT	1	1				
22	90480–24186	GROMMET	1	1				
23	5KS–21721–00–PD	COVER,SIDE 2	1	1				UR FOR DRMK
	5KS–21721–00–PH	COVER,SIDE 2	1	1				UR FOR DBNM8
24	5KS–2172A–00	PANEL 1	1	1				
25	90480–12320	GROMMET	2	2				

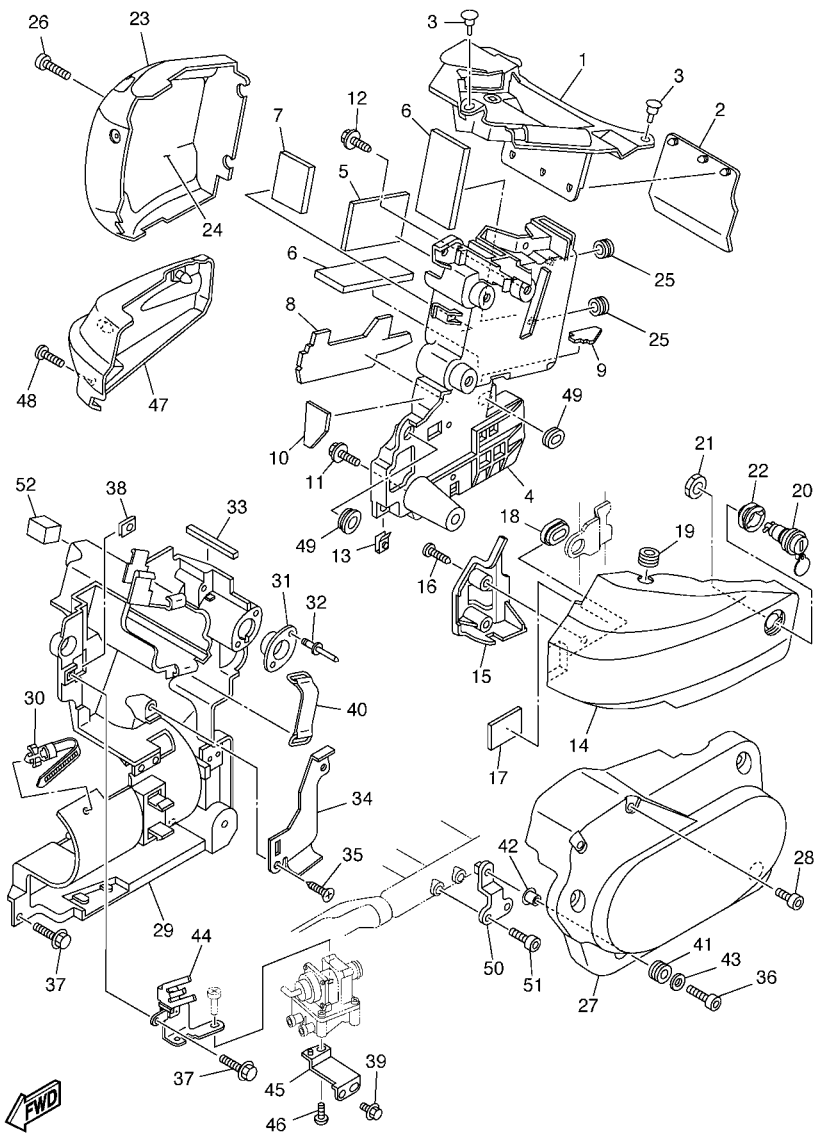

5YST110-F210

FIG. 21 SIDE COVER

REF. NO.	PART NO.	DESCRIPTION	23S6	23S7				REMARKS
26	90149–06302	SCREW	1	1				
27	5EL–21731–00	COVER, SIDE 3	1	1				
28	90110–06254	BOLT, HEXAGON SOCKET HEAD	2	2				
29	5EL–2177E–01	LID	1	1				
30	90464–12089	CLAMP	1	1				
31	4TR–2175H–00	STAY, LOCK	1	1				
32	90267–40180	RIVET, BLIND	2	2				
33	1FK–83526–00	DAMPER 2	1	1				
34	5EL–2178L–00	GUIDE 1	1	1				
35	97707–60016	SCREW, TAPPING	2	2				
36	91314–06025	BOLT, HEXAGON SOCKET HEAD	4	4				
37	90119–06096	BOLT, WITH WASHER	3	3				
38	90183–06053	NUT, SPRING	4	4				
39	95807–06010	BOLT, FLANGE	3	3				
40	3TJ–82131–00	BAND, BATTERY	1	1				
41	90480–10289	GROMMET	4	4				
42	90387–066Y6	COLLAR	4	4				
43	90201–06062	WASHER, PLATE	4	4				
44	5KS–2172K–00	BRACKET 1	1	1				
45	5EL–2172L–00	BRACKET 2	1	1				
46	92017–06012	BOLT, BUTTON HEAD	1	1				
47	5EL–21741–00	COVER, SIDE 4	1	1				
48	90149–06302	SCREW	1	1				
49	90480–01558	GROMMET	2	2				
50	5EL–2172M–00	BRACKET 3	1	1				
51	91317–06020	BOLT	2	2				
52	5EL–21746–00	DAMPER	1	1				

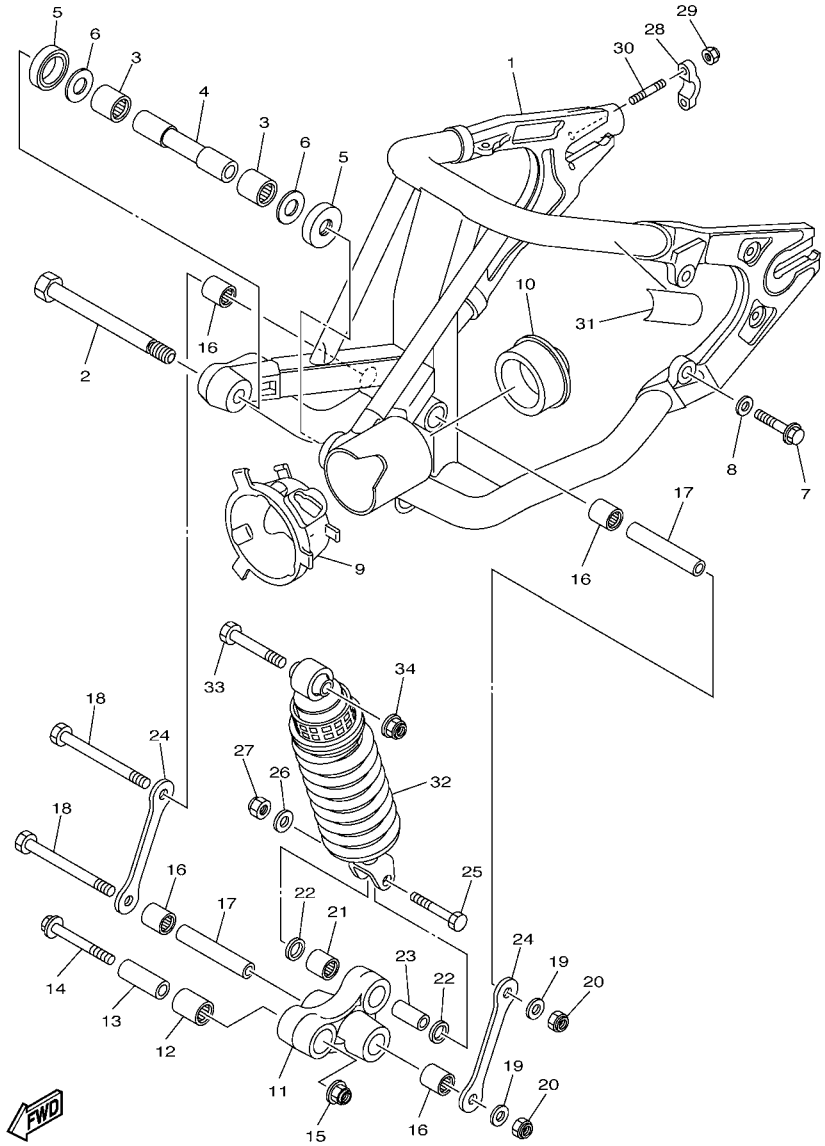

FIG. 22 REAR ARM & SUSPENSION

REF. NO.	PART NO.	DESCRIPTION	23S6	23S7				REMARKS
1	5KS–22110–02	REAR ARM COMP.	1	1				
2	5EL–22141–00	SHAFT, PIVOT	1	1				
3	93320–32403	BEARING	2	2				
4	4X7–22124–00	BUSH 2	1	1				
5	5EL–22129–00	COVER, THRUST 2	2	2				
6	90201–243U9	WASHER, PLATE	2	2				
7	90105–101A9	BOLT, FLANGE	4	4				
8	90201–112U0	WASHER, PLATE	4	4				
9	5EL–22189–00	BOOT, RUBBER	1	1				
10	4VR–22184–00	BUSH	1	1				
11	4KM–2217A–00	ARM, RELAY	1	1				
12	93317–42060	BEARING	1	1				
13	90387–100T8	COLLAR	1	1				
14	90105–10727	BOLT, FLANGE	1	1				
15	95607–10200	NUT, U FLANGE	1	1				
16	93317–41761	BEARING	4	4				
17	90387–126T1	COLLAR	2	2				
18	90101–12673	BOLT	2	2				
19	90201–126A7	WASHER, PLATE	2	2				
20	95617–12100	NUT, U	2	2				
21	93317–31771	BEARING	1	1				
22	93109–17071	OIL SEAL	2	2				
23	90387–127W0	COLLAR	1	1				
24	2KT–2217M–00	ARM 1	2	2				
25	90101–10659	BOLT	1	1				
26	90201–101J1	WASHER, PLATE	1	1				
27	95617–10100	NUT, U	1	1				

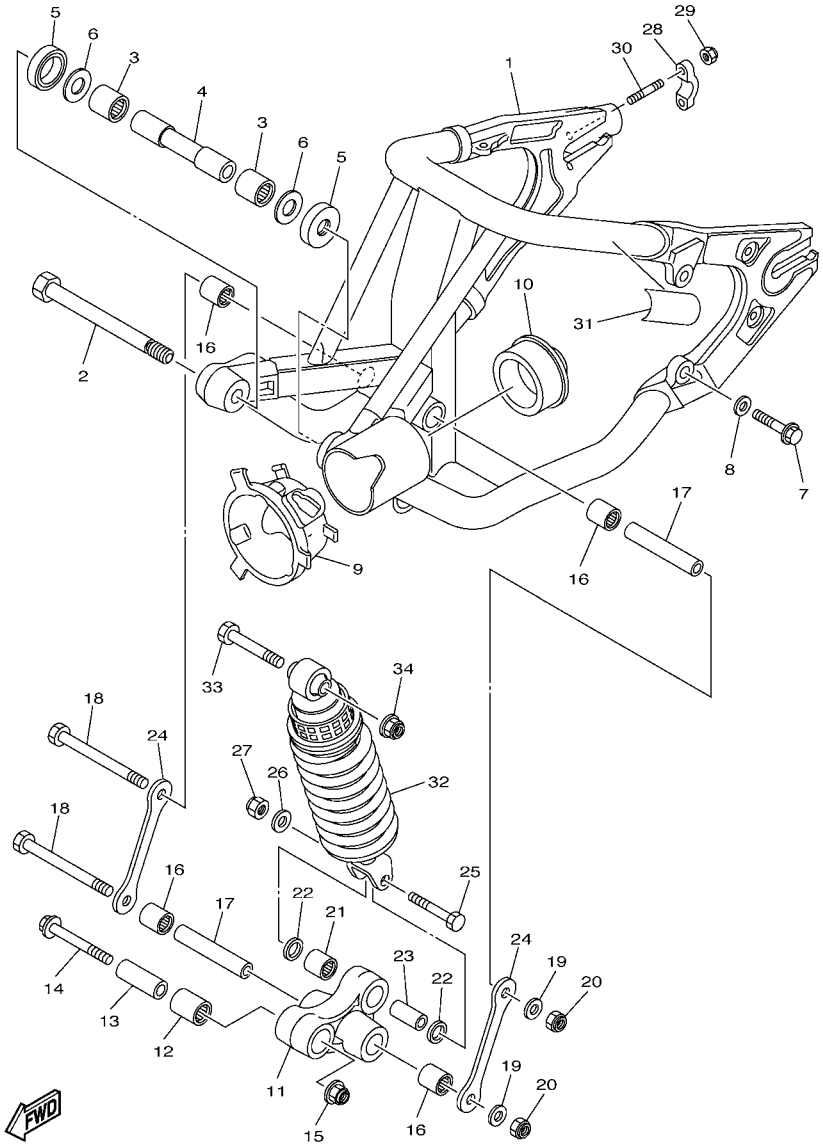

FIG. 22 REAR ARM & SUSPENSION

REF. NO.	PART NO.	DESCRIPTION	23S6	23S7				REMARKS
28	1E6–23441–10–98	HOLDER, HANDLE UPPER	1	1				LGB
29	95607–08200	NUT, SELF-LOCKING	2	2				
30	95627–08330	BOLT, STUD	2	2				
31	5KS–21668–00	LABEL, TIRE	1	1				
32	5KS–22210–60	SHOCK ABSORBER ASSY, REAR	1	1				
33	90109–10554	BOLT	1	1				
34	95607–10200	NUT, U FLANGE	1	1				

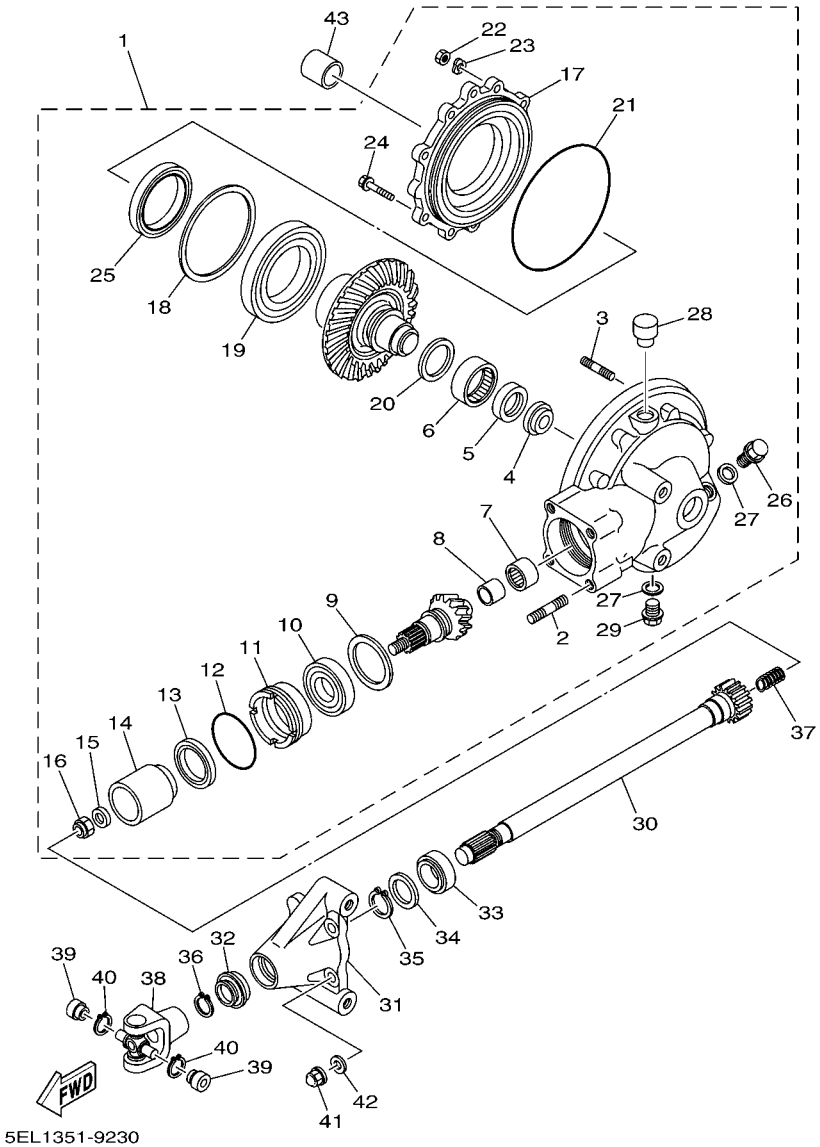

FIG. 23 DRIVE SHAFT

REF. NO.	PART NO.	DESCRIPTION	23S6	23S7				REMARKS
1	5EL–46101–00	REAR AXLE GEAR CASE ASSY	1	1				
2	90116–10593	.BOLT, STUD	4	4				
3	90116–08360	.BOLT, STUD	6	6				
4	5EL–46153–00	.COLLAR, GUIDE	1	1				
5	93101–30084	.OIL SEAL	1	1				
6	93311–43729	.BEARING	1	1				
7	93317–41510	.BEARING	1	1				
8	2H7–46122–00	.RACE, INNER	1	1				
9	1J7–17537–Y0–30	.SHIM, THRUST (0.30T)	1	1				UR
	1J7–17537–Y0–40	.SHIM, THRUST (0.40T)	1	1				UR
	1J7–17537–Y0–50	.SHIM, THRUST (0.50T)	1	1				UR
10	93306–30533	.BEARING	1	1				
11	4H7–46125–00	.RETAINER, BEARING	1	1				
12	93210–60426	.O-RING	1	1				
13	93101–38098	.OIL SEAL	1	1				
14	4H7–46123–01	.COUPLING, GEAR	1	1				
15	90201–14632	.WASHER, PLATE	1	1				
16	90185–14070	.NUT, SELF-LOCKING	1	1				
17	4H7–46152–00	.HOUSING, BEARING	1	1				
18	1J7–46117–Y0–25	.SHIM, RING GEAR (0.25T)	1	1				UR
	1J7–46117–Y0–30	.SHIM, RING GEAR (0.30T)	1	1				UR
	1J7–46117–Y0–40	.SHIM, RING GEAR (0.40T)	1	1				UR
	1J7–46117–Y0–50	.SHIM, RING GEAR (0.50T)	1	1				UR
19	93316–01403	.BEARING	1	1				
20	22U–46118–00–12	.SHIM, THRUST (1.2T)	1	1				UR
	22U–46118–00–14	.SHIM, THRUST (1.4T)	1	1				UR
	22U–46118–00–16	.SHIM, THRUST (1.6T)	1	1				UR

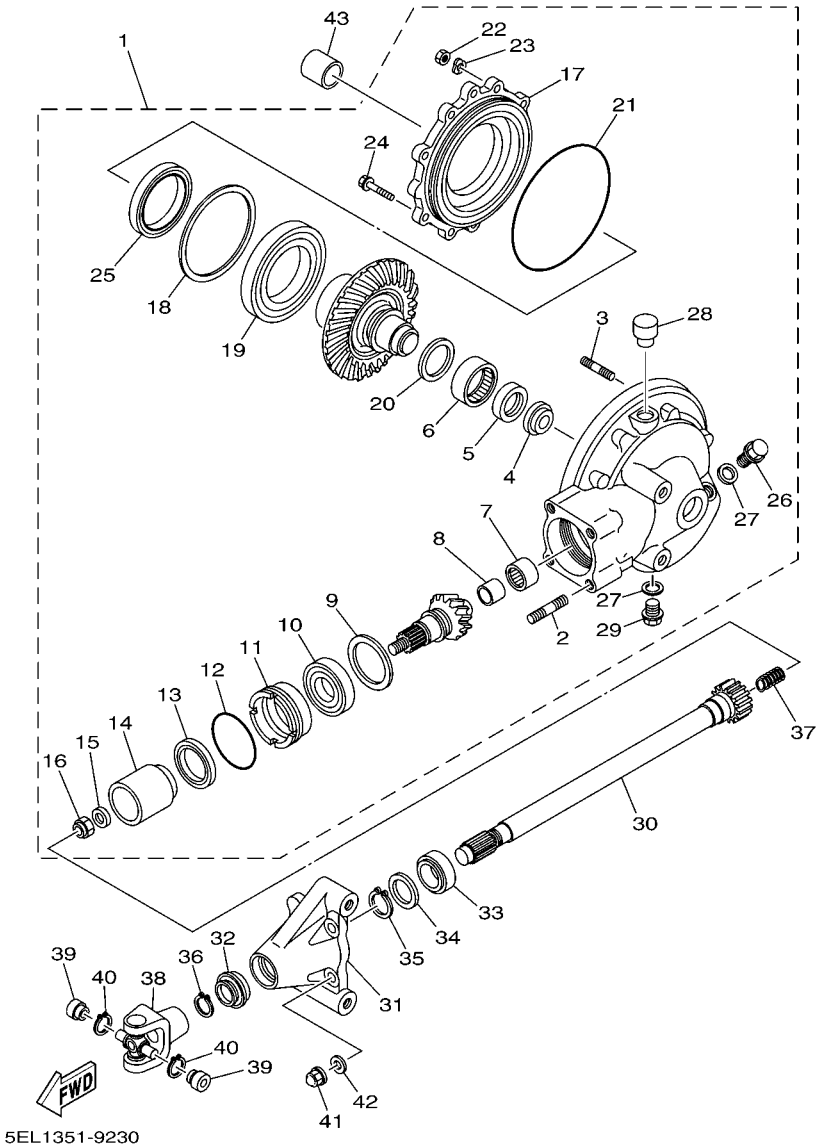

FIG. 23 DRIVE SHAFT

REF. NO.	PART NO.	DESCRIPTION	23S6	23S7				REMARKS
20	22U–46118–00–18	.SHIM, THRUST (1.8T)	1	1				UR
	22U–46118–00–20	.SHIM, THRUST (2.0T)	1	1				UR
21	93211–44348	.O-RING	1	1				
22	95317–08600	.NUT	6	6				
23	92907–08700	.WASHER	6	6				
24	95817–10025	.BOLT, FLANGE	2	2				
25	93102–70167	.OIL SEAL	1	1				
26	90340–14132	.PLUG, STRAIGHT SCREW	1	1				
27	214–11198–01	.GASKET	2	2				
28	56W–17590–00	.BREATHER COMP.	1	1				
29	90340–14004	.PLUG, STRAIGHT SCREW	1	1				
30	5EL–46171–00	SHAFT DRIVE ASSY	1	1				
31	5EL–46154–00	COVER, HOUSING	1	1				
32	5EL–46297–00	COVER, DUST	1	1				
33	93108–43014	OIL SEAL	1	1				
34	90201–266L1	WASHER, PLATE	1	1				
35	93410–26067	CIRCLIP	1	1				
36	93410–22039	CIRCLIP	1	1				
37	90501–16491	SPRING, COMPRESSION	1	1				
38	4X7–46180–00	CROSS JOINT COMP.	1	1				
39	93311–21044	BEARING	2	2				
40	93440–20088	CIRCLIP	2	2				
41	90176–10075	NUT, CROWN	4	4				
42	92990–10600	WASHER, PLATE	4	4				
43	90387–172A5	COLLAR	1	1				

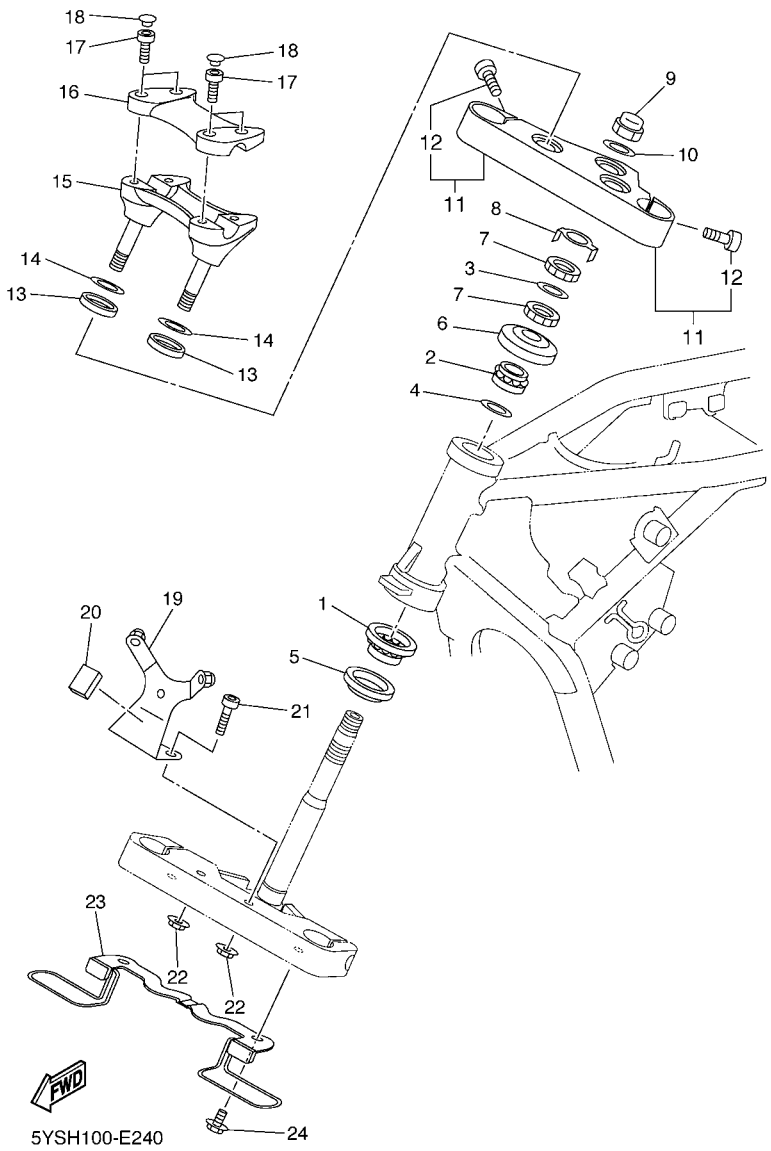

FIG. 24 STEERING

REF. NO.	PART NO.	DESCRIPTION	23S6	23S7				REMARKS
1	93399–99932	BEARING	1	1				
2	93399–99931	BEARING	1	1				
3	90202–26142	WASHER, PLATE	1	1				
4	90202–24190	WASHER, PLATE	1	1				
5	3FV–23462–00	SEAL, STEERING	1	1				
6	1W1–23416–00	COVER, BALL RACE 2	1	1				
7	90179–25033	NUT	2	2				
8	26H–23418–01	WASHER, SPECIAL	1	1				
9	90176–22081	NUT, CROWN	1	1				
10	90201–220T0	WASHER, PLATE	1	1				
11	4VR–Y2343–70	CROWN, HANDLE	1	1				
12	91314–08030	.BOLT, HEXAGON SOCKET HEAD	2	2				
13	3DM–23445–00	DAMPER	2	2				
14	90201–14220	WASHER, PLATE	2	2				
15	5VR–23442–00	HOLDER, HANDLE LOWER	1	1				
16	5VR–23441–00	HOLDER, HANDLE UPPER	1	1				
17	91314–08025	BOLT, HEXAGON SOCKET HEAD	4	4				
18	90338–08163	PLUG	4	4				
19	5BN–23174–01	STAY, HEADLIGHT	1	1				
20	5BN–2317J–00	DAMPER 1	1	1				
21	92014–08040	BOLT, BUTTON HEAD	2	2				
22	95707–08500	NUT, FLANGE	2	2				
23	5KS–25886–00	HOLDER, BRAKE HOSE	1	1				
24	95024–06010	BOLT, FLANGE	2	2				

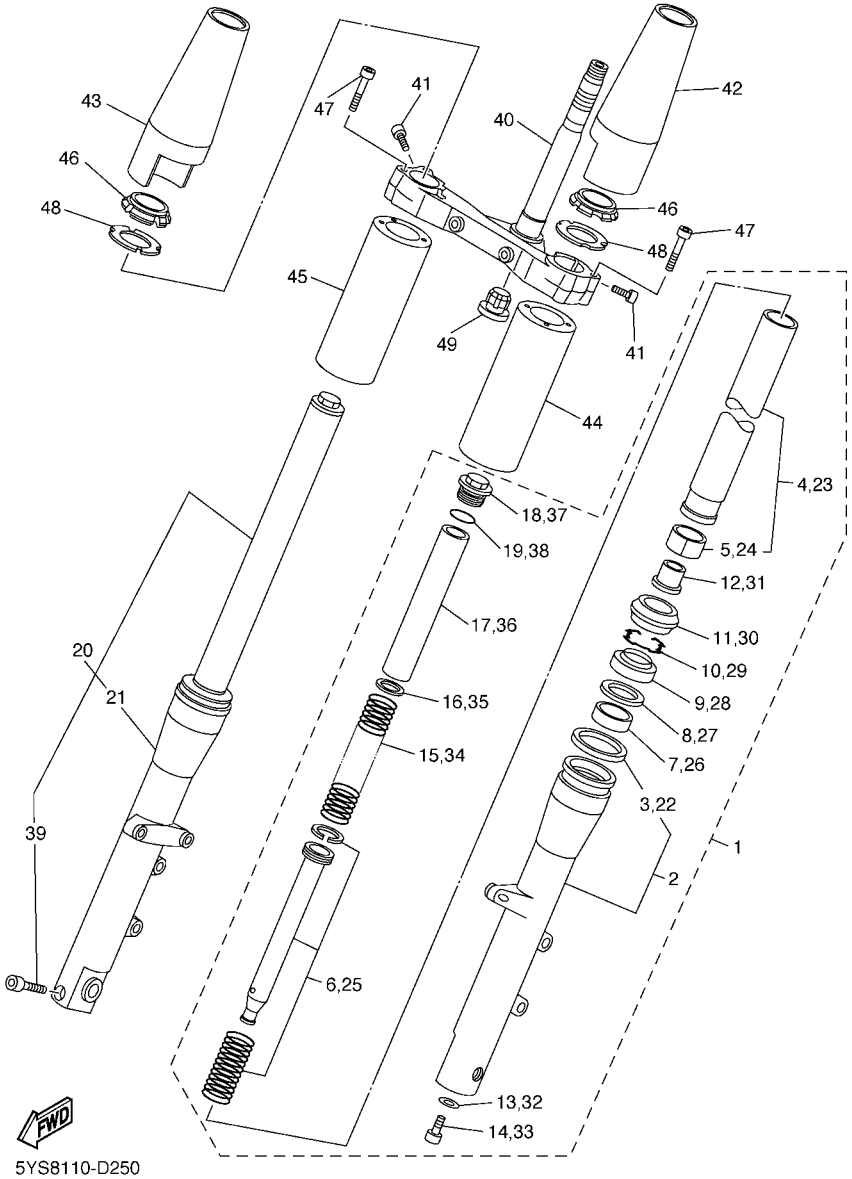

FIG. 25 FRONT FORK

REF. NO.	PART NO.	DESCRIPTION	23S6	23S7				REMARKS
1	5KS–23102–20	FRONT FORK ASSY (L.H)	1	1				
2	5KS–23126–10	.TUBE, OUTER (LEFT)	1	1				
3	5BN–23193–00	..GUIDE, BOOT	1	1				
4	5KS–23110–10	.INNER TUBE COMP.1	1	1				
5	5BN–23171–00	..PISTON, FRONT FORK	1	1				
6	5KS–23170–10	.CYLINDER COMP., FRONT FORK	1	1				
7	4FM–23125–40	.METAL, SLIDE 1	1	1				
8	36Y–23146–10	.WASHER, OIL SEAL	1	1				
9	4EB–23145–01	.OIL SEAL	1	1				
10	26H–23156–00	.RING, SNAP	1	1				
11	4EB–23144–00	.SEAL, DUST	1	1				
12	4YR–23173–00	.SPINDLE, TAPER	1	1				
13	509–23158–L0	.GASKET	1	1				
14	278–23181–50	.BOLT, HEXAGON SOCKET HEAD	1	1				
15	5KS–23141–10	.SPRING, FRONT FORK	1	1				
16	4DW–23149–40	.WASHER, SPRING UPPER	1	1				
17	5EL–23118–00	.SPACER	1	1				
18	1D0–23111–00	.BOLT, CAP	1	1				
19	43F–23188–10	.O-RING	1	1				
20	5KS–23103–20	FRONT FORK ASSY (R.H)	1	1				
21	5KS–23136–10	.TUBE, OUTER (RIGHT)	1	1				
22	5BN–23193–00	..GUIDE, BOOT	1	1				
23	5KS–23110–10	.INNER TUBE COMP.1	1	1				
24	5BN–23171–00	..PISTON, FRONT FORK	1	1				
25	5KS–23170–10	.CYLINDER COMP., FRONT FORK	1	1				
26	4FM–23125–40	.METAL, SLIDE 1	1	1				
27	36Y–23146–10	.WASHER, OIL SEAL	1	1				

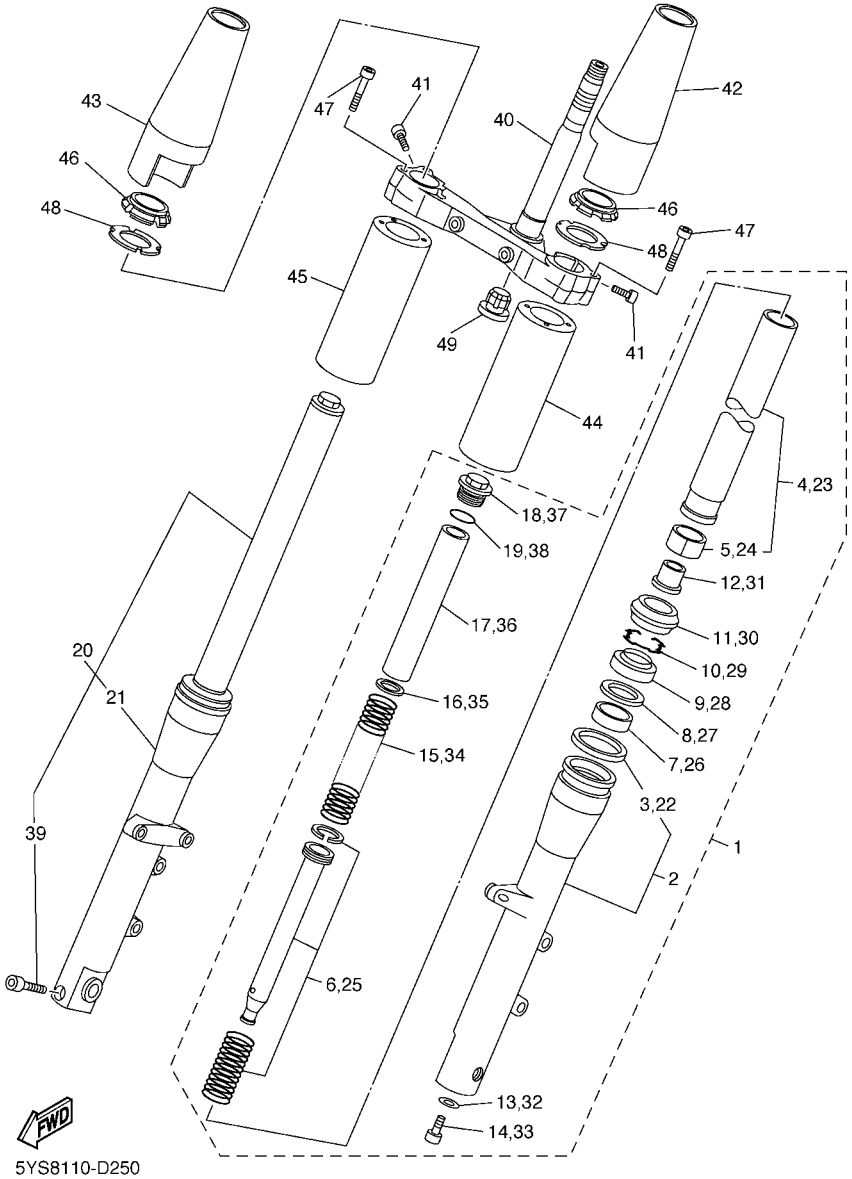

FIG. 25 FRONT FORK

REF. NO.	PART NO.	DESCRIPTION	23S6	23S7				REMARKS
28	4EB–23145–01	.OIL SEAL	1	1				
29	26H–23156–00	.RING, SNAP	1	1				
30	4EB–23144–00	.SEAL, DUST	1	1				
31	4YR–23173–00	.SPINDLE, TAPER	1	1				
32	509–23158–L0	.GASKET	1	1				
33	278–23181–50	.BOLT, HEXAGON SOCKET HEAD	1	1				
34	5KS–23141–10	.SPRING, FRONT FORK	1	1				
35	4DW–23149–40	.WASHER, SPRING UPPER	1	1				
36	5EL–23118–00	.SPACER	1	1				
37	1D0–23111–00	.BOLT, CAP	1	1				
38	43F–23188–10	.O-RING	1	1				
39	91314–08040	.BOLT, HEXAGON SOCKET HEAD	1	1				
40	5KS–23340–10	UNDER BRACKET COMP.	1	1				
41	91314–08025	BOLT, HEXAGON SOCKET HEAD	4	4				
42	5KS–23121–20	COVER, UPPER 1	1	1				
43	5KS–23131–20	COVER, UPPER 2	1	1				
44	5KS–23123–20	COVER, UNDER 1	1	1				
45	5KS–23133–20	COVER, LOWER 2	1	1				
46	5BN–23163–00	GASKET	2	2				
47	5BN–23394–01	BOLT, SPECIAL	6	6				
48	5KS–23165–10	WASHER, FELT	2	2				
49	4KM–23123–01	COVER, UNDER 1	1	1				

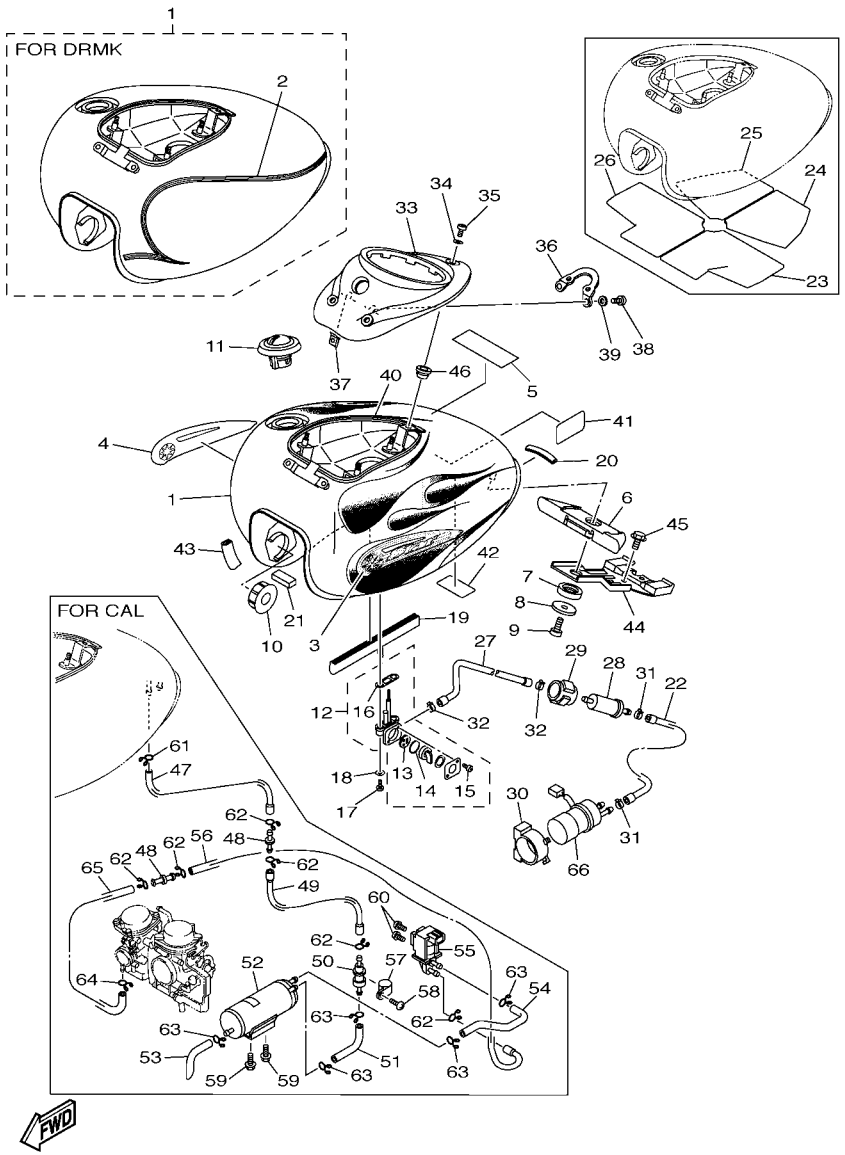

FIG. 26 FUEL TANK

REF. NO.	PART NO.	DESCRIPTION	23S6	23S7				REMARKS
1	5EL–Y2410–A2–X3	FUEL TANK COMP.	1					UR FOR DBNM8
	5EL–Y2410–A2–X6	FUEL TANK COMP.	1					UR FOR DRMK
	5EL–Y2410–V2–W7	FUEL TANK COMP.		1				UR FOR DBNM8
	5EL–Y2410–V2–W8	FUEL TANK COMP.		1				UR FOR DRMK
2	5YS–24240–A0	.GRAPHIC SET	1	1				FOR DRMK
3	23S–2416B–00	EMBLEM	1	1				
4	23S–2417B–00	EMBLEM	1	1				
5	5GK–2118K–00	LABEL, CAUTION	1	1				
6	5EL–24182–00	DAMPER, LOCATING 2	1	1				
7	4TR–24183–00	DAMPER, LOCATING 3	1	1				
8	90201–060S9	WASHER, PLATE	1	1				
9	92017–06012	BOLT, BUTTON HEAD	1	1				
10	2YK–24181–10	DAMPER, LOCATING 1	2	2				
11	5BN–24602–02	CAP ASSY	1					
	4NK–24602–12	CAP ASSY		1				
12	4WM–24500–02	FUEL COCK ASSY 1	1	1				
13	3AC–24523–00	.VALVE PACKING	1	1				
14	3AJ–24534–01	.SEAL, COCK	1	1				
15	97801–03008	.SCREW, PAN HEAD	2	2				
16	4X8–24512–00	.O-RING	1	1				
17	90149–06011	SCREW	2	2				
18	90202–05193	WASHER, PLATE	2	2				
19	1FK–2171L–00	MOLE, SIDE COVER 1	1	1				
20	5EL–24188–00	MOLD, FUEL TANK	1	1				
21	3XV–21717–00	DAMPER	1	1				
22	5EL–24311–10	PIPE, FUEL 1	1	1				
23	5YS–2414H–00	DAMPER, PLATE 1	1	1				

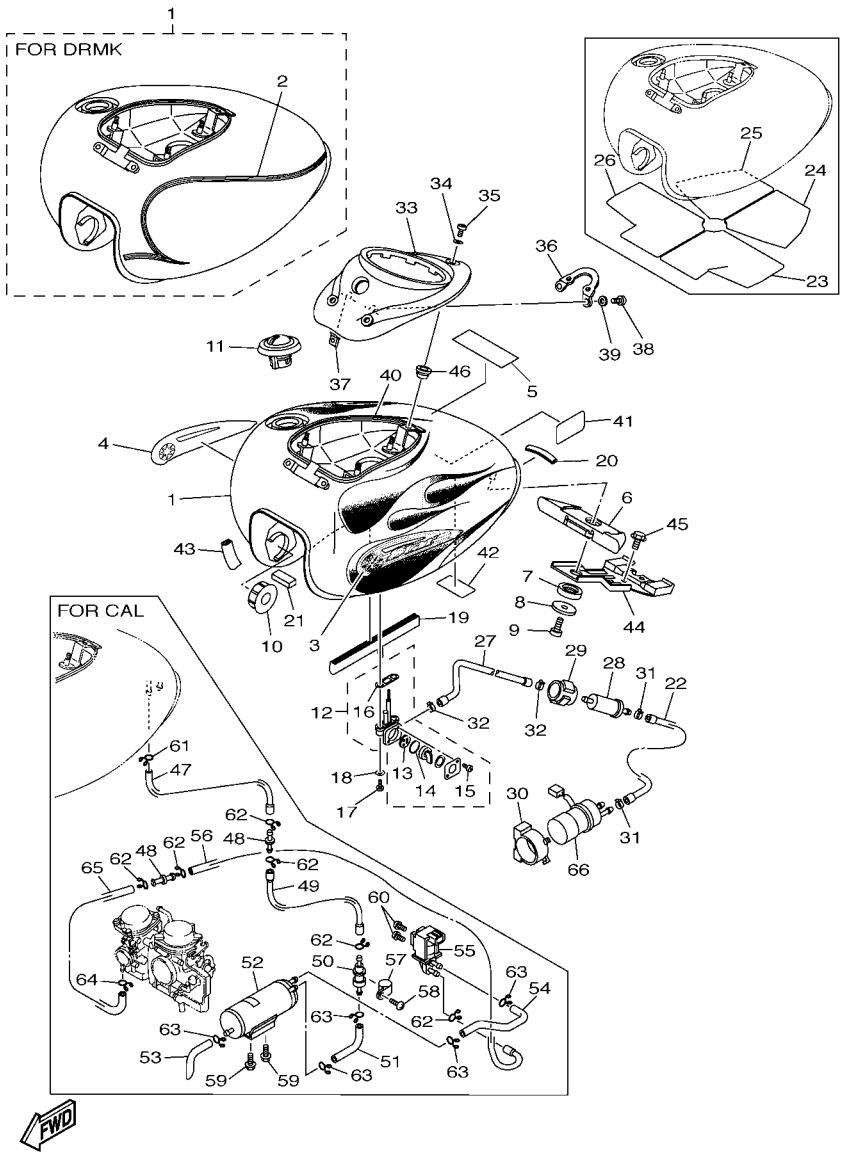

FIG. 26 FUEL TANK

REF. NO.	PART NO.	DESCRIPTION	23S6	23S7				REMARKS
24	5YS–2414J–00	DAMPER, PLATE 2	1	1				
25	5YS–2414K–00	DAMPER, PLATE 3	1	1				
26	5YS–2414N–00	DAMPER, PLATE 4	1	1				
27	5EL–24313–10	PIPE 3	1	1				
28	1FK–24560–10	FILTER ASSY	1	1				
29	1FK–24566–00	BRACKET, FILTER	1	1				
30	4EB–24398–00	BAND 1	1	1				
31	90467–12053	CLIP	2	2				
32	90467–11028	CLIP	2	2				
33	5EL–2171A–00	COVER, TOP	1	1				
34	90202–05180	WASHER, PLATE	3	3				
35	90110–05201	BOLT, HEXAGON SOCKET HEAD	3	3				
36	5EL–2412F–00	BRACKET, SEAT	1	1				
37	90183–05061	NUT, SPRING	2	2				
38	98507–05012	SCREW, PAN HEAD	2	2				
39	92907–05600	WASHER, PLATE	2	2				
40	5EL–2414G–00	SEAL	2	2				
41	4DN–21268–00	SEAL	1	1				
42	3SP–21732–00	SEAL 1	1	1				
43	5EL–24188–00	MOLD, FUEL TANK	1	1				
44	5EL–2411F–00	PLATE, FITTING	1	1				
45	95807–08012	BOLT, FLANGE	2	2				
46	90179–05009	NUT	3	3				
47	5EL–24321–10	PIPE 10		1				
48	4XY–14568–00	JOINT		2				
49	5EL–24312–20	PIPE 2		1				
50	5RB–24180–00	ROLL OVER VALVE ASSY		1				

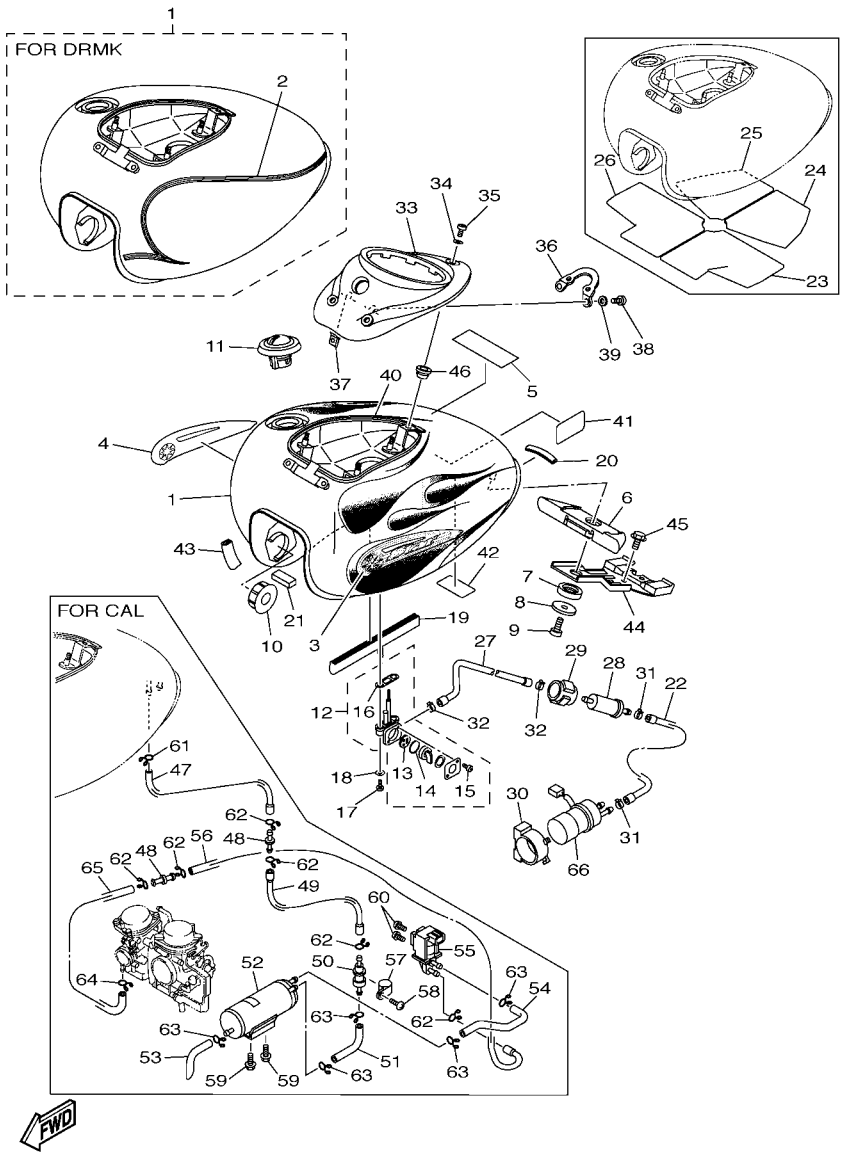

FIG. 26 FUEL TANK

REF. NO.	PART NO.	DESCRIPTION	23S6	23S7				REMARKS
51	90445–11056	HOSE		1				
52	5EL–24170–00	CANISTER ASSY		1				
53	5EL–24316–10	PIPE 6		1				
54	5EL–24317–10	PIPE 7		1				
55	4WM–14896–00	VALVE, OUTER VENT CONTROL 2		1				
56	5EL–24315–10	PIPE 5		1				
57	90461–15139	CLAMP		1				
58	97707–50016	SCREW, TRUSS HEAD TAPPING		1				
59	90105–06446	BOLT, FLANGE		2				
60	90150–05040	SCREW, ROUND HEAD		2				
61	90467–08075	CLIP		1				
62	90467–09103	CLIP		6				
63	90467–10041	CLIP		5				
64	90467–08017	CLIP		1				
65	5EL–24322–10	PIPE 11		1				
66	5KS–13907–00	FUEL PUMP COMP.	1	1				

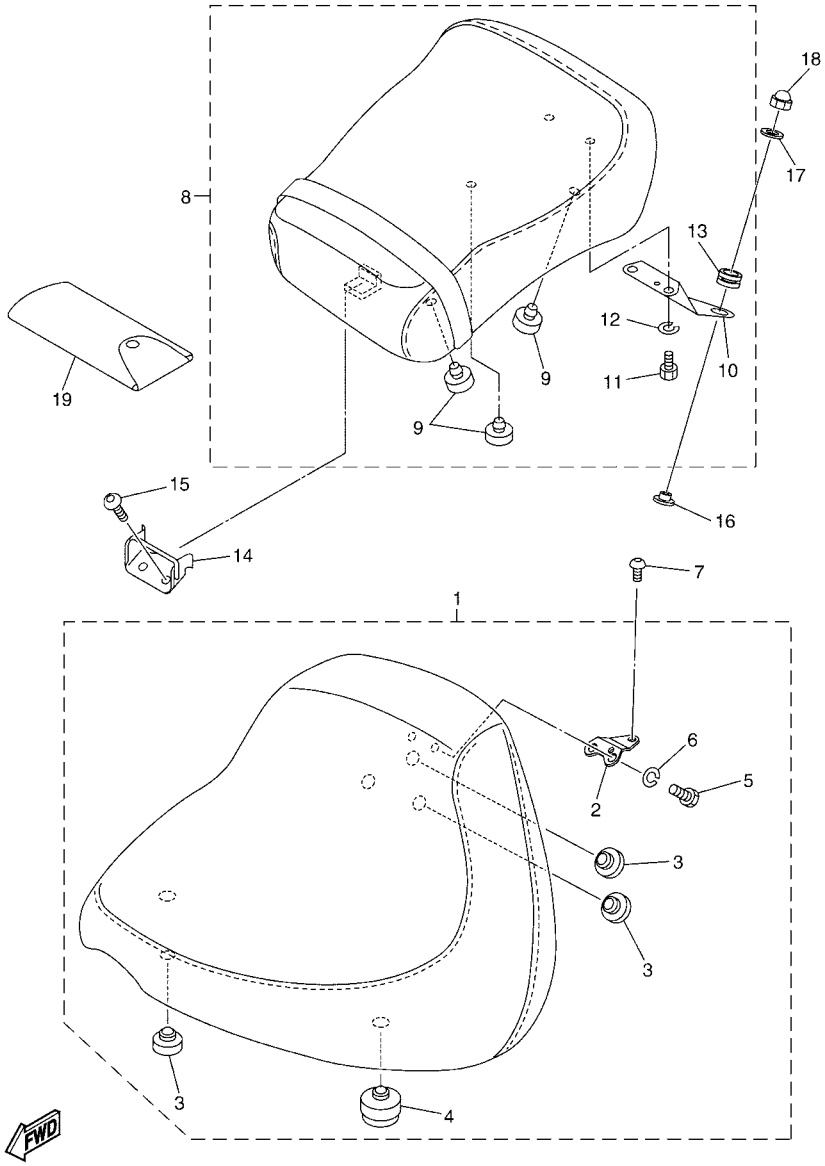

23S1100-G270

FIG. 27 SEAT

REF. NO.	PART NO.	DESCRIPTION	23S6	23S7				REMARKS
1	5KS–24710–00	SINGLE SEAT ASSY	1	1				
2	5KS–2475H–00	.BRACKET, SEAT LEVER 1	1	1				
3	22W–24741–00	.PAD, SEAT	4	4				
4	1T4–24741–00	.PAD, SEAT	2	2				
5	97007–06012	.BOLT	2	2				
6	92907–06100	.WASHER, SPRING	2	2				
7	92014–08012	BOLT, BUTTON HEAD	1	1				
8	5KS–24750–31	TANDEM SEAT ASSY	1	1				
9	22W–24741–00	.PAD, SEAT	5	5				
10	5YS–2475J–00	.BRACKET, SEAT LEVER 2	1	1				
11	97007–06012	.BOLT	2	2				
12	92907–06100	.WASHER, SPRING	2	2				
13	5YS–24742–00	.GROMMET	1	1				
14	5KS–2475N–00	BRACKET	1	1				
15	92017–06016	BOLT, BUTTON HEAD	2	2				
16	5YS–2471N–00	COLLAR 1	1	1				
17	90201–08042	WASHER, PLATE	1	1				
18	90176–08002	NUT, CROWN	1	1				
19	5EL–28100–10	TOOL KIT	1	1				

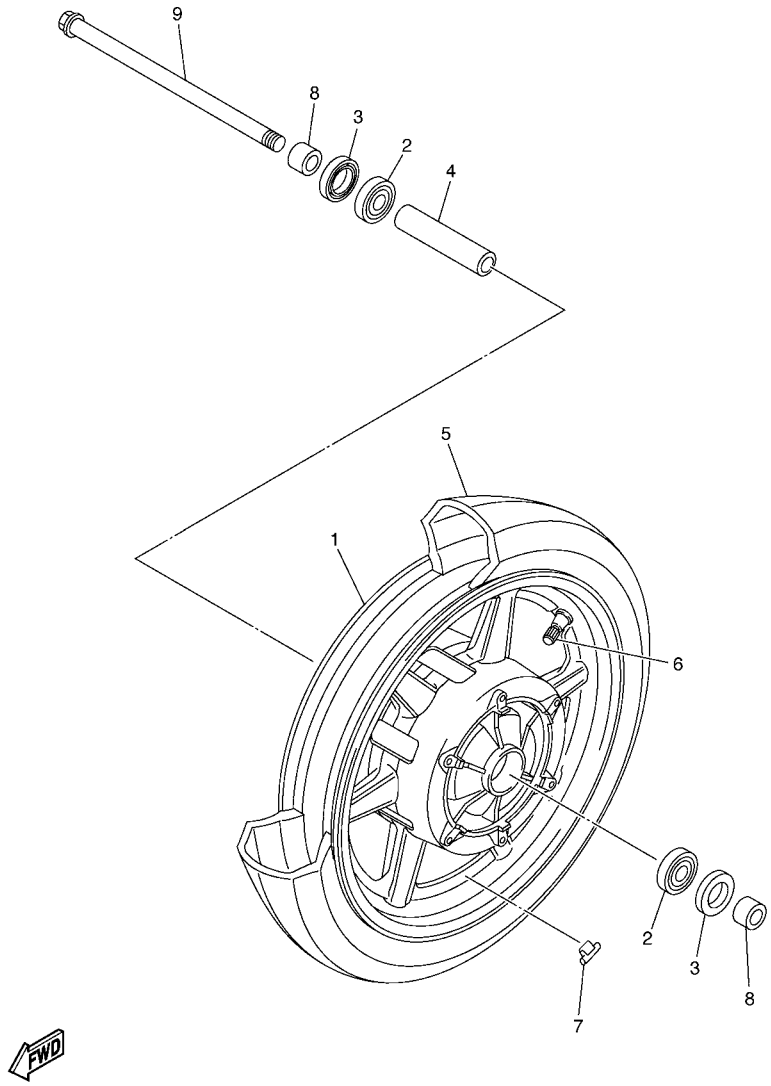

5KSU100-B280

FIG. 28 FRONT WHEEL FOR CAST WHEEL

REF. NO.	PART NO.	DESCRIPTION	23S6	23S7				REMARKS
1	5KS–25168–00–MA	CAST WHEEL, FRONT	1	1				TGM
2	93306–30317	BEARING	2	2				
3	93102–28022	OIL SEAL	2	2				
4	90387–173M5	COLLAR	1	1				
5	94113–16008	TIRE (130/90-16 M/C 67S D404)	1	1				UR DUNLOP
	94113–16009	TIRE (130/90-16 M/C 67S G703)	1	1				UR BRIDGESTONE
6	93900–00030	VALVE, RIM (TR412)	1	1				TAIHEIYO
7	5MT–25398–00	BALANCER, WHEEL (10G)	1	1				UN
	5MT–25398–10	BALANCER, WHEEL (20G)	1	1				UN
	5MT–25398–20	BALANCER, WHEEL (30G)	1	1				UN
8	90387–173R6	COLLAR	2	2				
9	5KS–25181–00	AXLE, WHEEL	1	1				

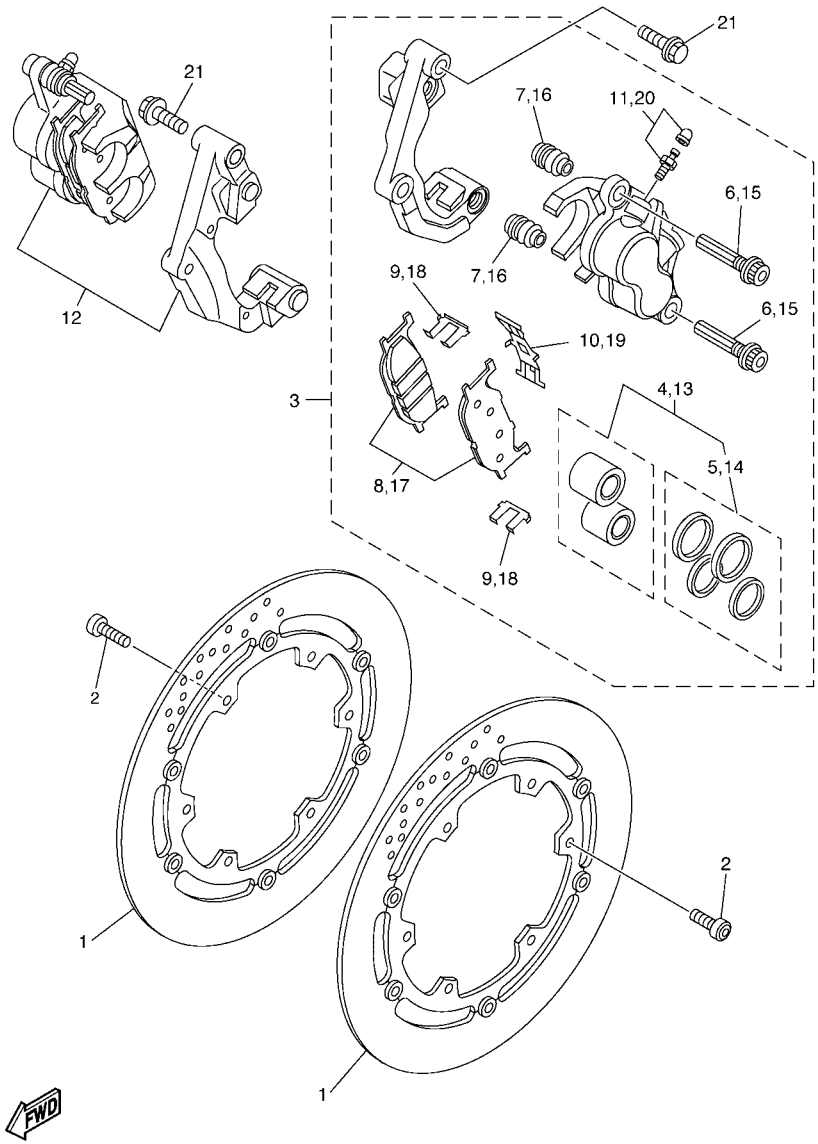

5KSU100-B290

FIG. 29 FRONT BRAKE CALIPER

REF. NO.	PART NO.	DESCRIPTION	23S6	23S7				REMARKS
1	5PX–2581T–10	DISK BRAKE ASSY	2	2				
2	90109–083G4	BOLT	12	12				
3	5KS–2580T–01	CALIPER ASSY (LEFT)	1	1				
4	5KS–W0057–00	.PISTON ASSY, CALIPER	1	1				
5	4FU–W0047–00	..CALIPER SEAL KIT	1	1				
6	5JW–25914–10	.PIN, SLIDE	2	2				
7	4TT–25937–00	.BOOT 2	2	2				
8	4EB–W0045–00	.BRAKE PAD KIT	1	1				
9	4BP–25919–00	.SUPPORT, PAD	2	2				
10	3YX–25929–00	.SPRING, ANTI RATTLE	1	1				
11	51L–W0048–00	.BLEED SCREW KIT	1	1				
12	5KS–2580U–01	CALIPER ASSY (RIGHT)	1	1				
13	5KS–W0057–00	.PISTON ASSY, CALIPER	1	1				
14	4FU–W0047–00	..CALIPER SEAL KIT	1	1				
15	5JW–25914–10	.PIN, SLIDE	2	2				
16	4TT–25937–00	.BOOT 2	2	2				
17	4EB–W0045–00	.BRAKE PAD KIT	1	1				
18	4BP–25919–00	.SUPPORT, PAD	2	2				
19	3YX–25929–00	.SPRING, ANTI RATTLE	1	1				
20	51L–W0048–00	.BLEED SCREW KIT	1	1				
21	90105–10638	BOLT, FLANGE	4	4				

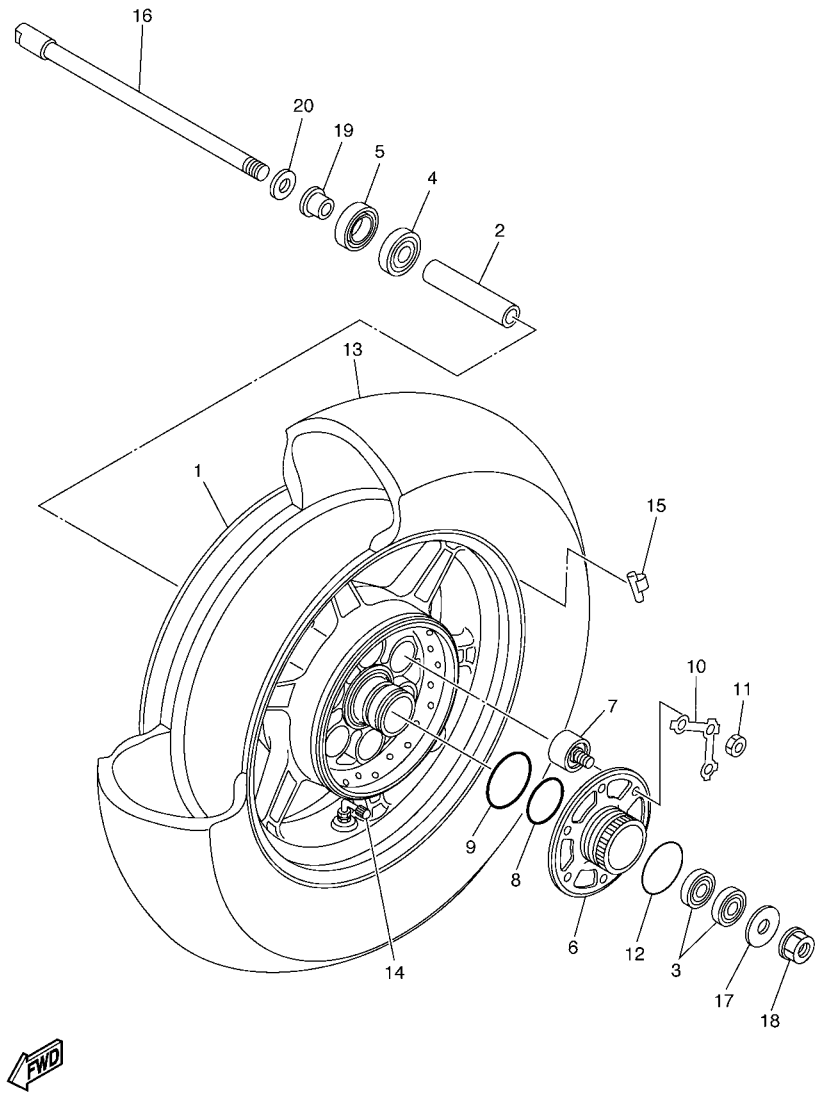

5KSU100-B300

FIG. 30 REAR WHEEL FOR CAST WHEEL

REF. NO.	PART NO.	DESCRIPTION	23S6	23S7				REMARKS
1	5KS–25338–00–MA	CAST WHEEL, REAR	1	1				TGM
2	90387–173M5	COLLAR	1	1				
3	93306–20348	BEARING	2	2				
4	93306–30317	BEARING	1	1				
5	93102–25044	OIL SEAL	1	1				
6	16G–25366–01	CLUTCH, HUB	1	1				
7	5EL–25364–00	DAMPER	6	6				
8	93210–48530	O-RING	1	1				
9	93210–59531	O-RING	1	1				
10	16G–25412–00	WASHER	2	2				
11	90170–10011	NUT	6	6				
12	93210–57428	O-RING	1	1				
13	94117–15011	TIRE (170/80-15 M/C 77S D404)	1	1				UR DUNLOP
	94117–15012	TIRE (170/80-15 M/C 77S G702)	1	1				UR BRIDGESTONE
14	93900–00025	VALVE, RIM (PVR59A)	1	1				TAIHEIYO
15	5MT–25398–00	BALANCER, WHEEL (10G)	1	1				UN
	5MT–25398–10	BALANCER, WHEEL (20G)	1	1				UN
	5MT–25398–20	BALANCER, WHEEL (30G)	1	1				UN
16	5EL–25381–10	AXLE, WHEEL	1	1				
17	90201–160T2	WASHER, PLATE	1	1				
18	95604–16200	NUT, U FLANGE	1	1				
19	90387–177Y4	COLLAR	1	1				
20	4H7–25377–00	COLLAR, WHEEL	1	1				

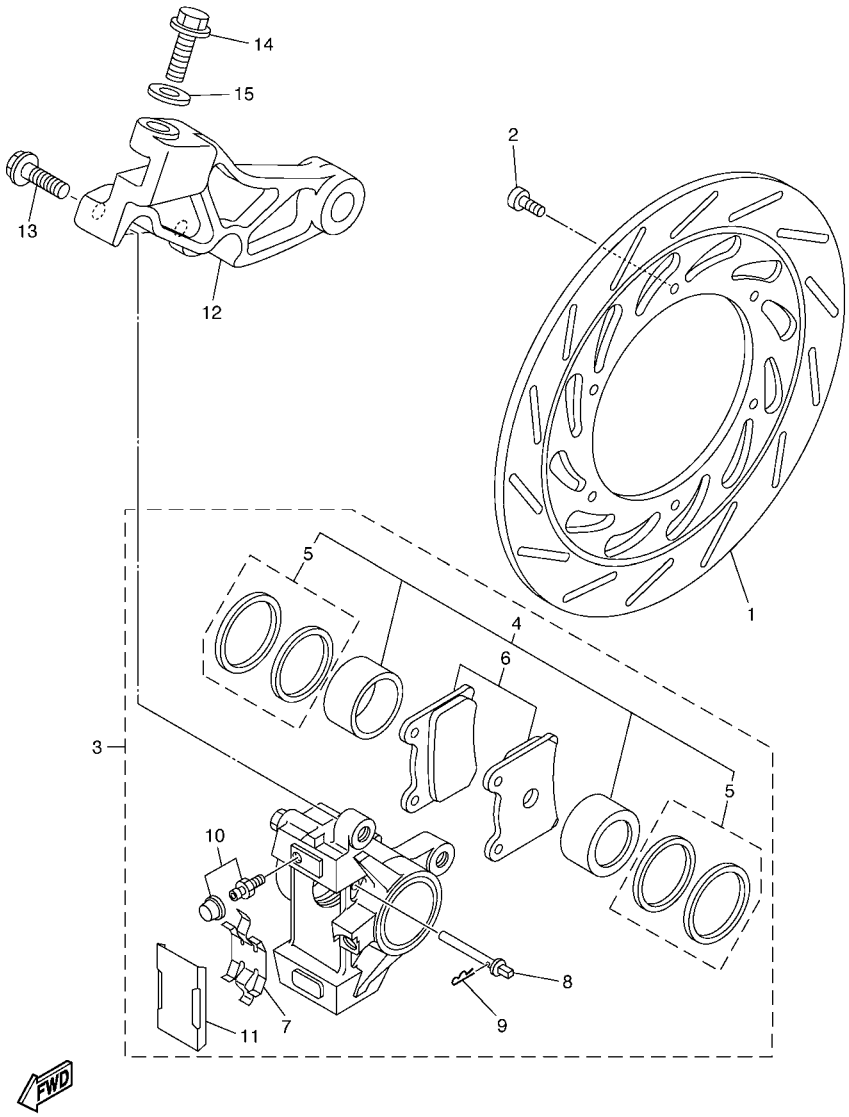

5KSU100-B310

FIG. 31 REAR BRAKE CALIPER

REF. NO.	PART NO.	DESCRIPTION	23S6	23S7				REMARKS
1	5KS–2582W–00	DISK, REAR BRAKE 2	1	1				
2	90109–083G4	BOLT	6	6				
3	5EL–2580W–00	CALIPER ASSY, REAR 2	1	1				
4	31A–W0057–00	.PISTON ASSY, CALIPER	1	1				
5	31A–W0047–00	..CALIPER SEAL KIT	1	1				
6	3XF–W0045–50	.BRAKE PAD KIT	1	1				
7	29L–25919–00	.SUPPORT, PAD	1	1				
8	3HE–25924–00	.PIN, PAD	2	2				
9	3GM–25925–00	.CLIP	2	2				
10	1J3–W0048–00	.BLEED SCREW KIT	1	1				
11	51J–25836–00	.COVER, DUST	1	1				
12	5EL–25819–01	BRACKET, CALIPER	1	1				
13	90105–10638	BOLT, FLANGE	2	2				
14	90105–10010	BOLT, FLANGE	1	1				
15	90201–10140	WASHER, PLATE	1	1				

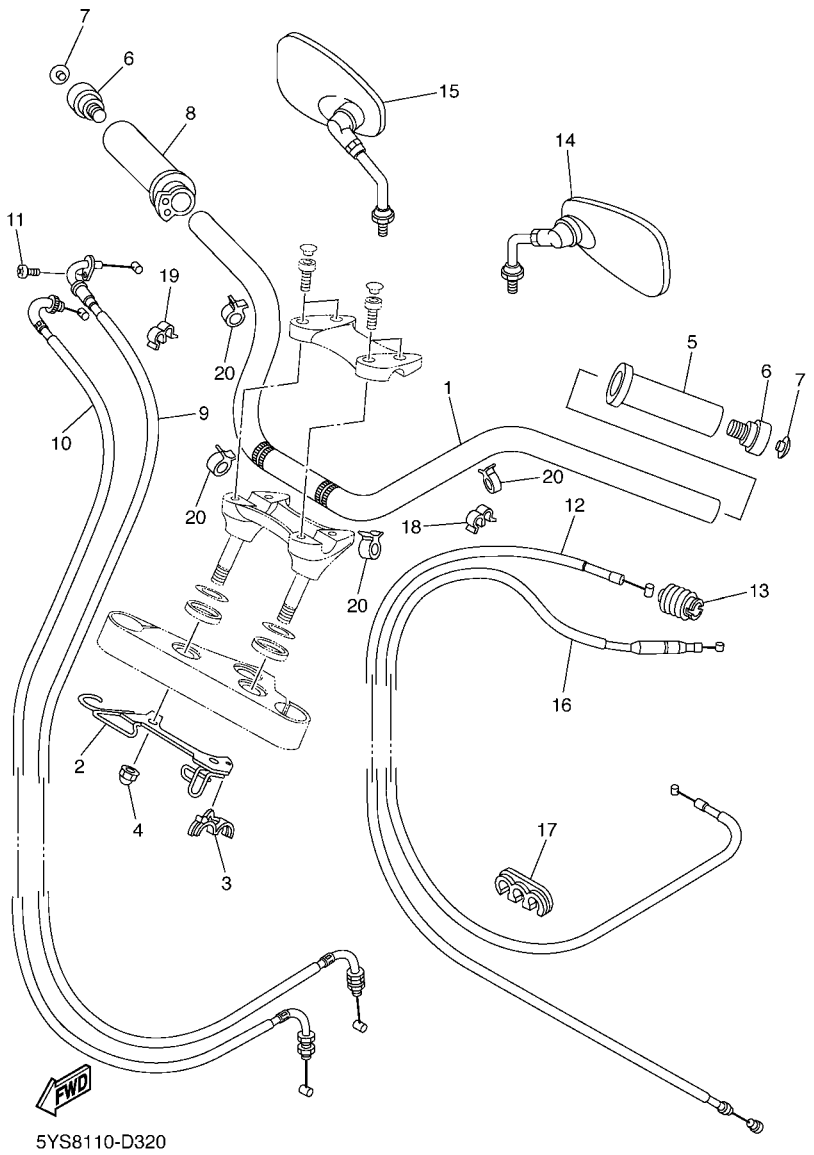

FIG. 32 STEERING HANDLE & CABLE

REF. NO.	PART NO.	DESCRIPTION	23S6	23S7				REMARKS
1	5KS–26111–11	HANDLEBAR	1	1				
2	5KS–23389–00	GUIDE, CABLE	1	1				
3	90464–18246	CLAMP	2	2				
4	90176–12052	NUT, CROWN	2	2				
5	4NK–26241–00	GRIP(LEFT)	1	1				
6	5EL–26246–00	END, GRIP	2	2				
7	5EL–23469–00	CAP, BOLT	2	2				
8	4XY–26240–00	GRIP ASSY	1	1				
9	5KS–26311–10	CABLE, THROTTLE 1	1	1				
10	5KS–26312–10	CABLE, THROTTLE 2	1	1				
11	98507–05008	SCREW, PAN HEAD	1	1				
12	5KS–26335–00	CABLE, CLUTCH	1	1				
13	1E6–26342–00	BOOT, CABLE	1	1				
14	4NK–26280–10	REAR VIEW MIRROR ASSY (LEFT)	1	1				
15	4NK–26290–10	REAR VIEW MIRROR ASSY (RIGHT)	1	1				
16	5EL–26331–00	CABLE, STARTER 1	1	1				
17	90464–07003	CLAMP	2	2				
18	90468–15139	CLIP	1	1				
19	90464–06214	CLAMP	1	1				
20	90464–15192	CLAMP	4	4				

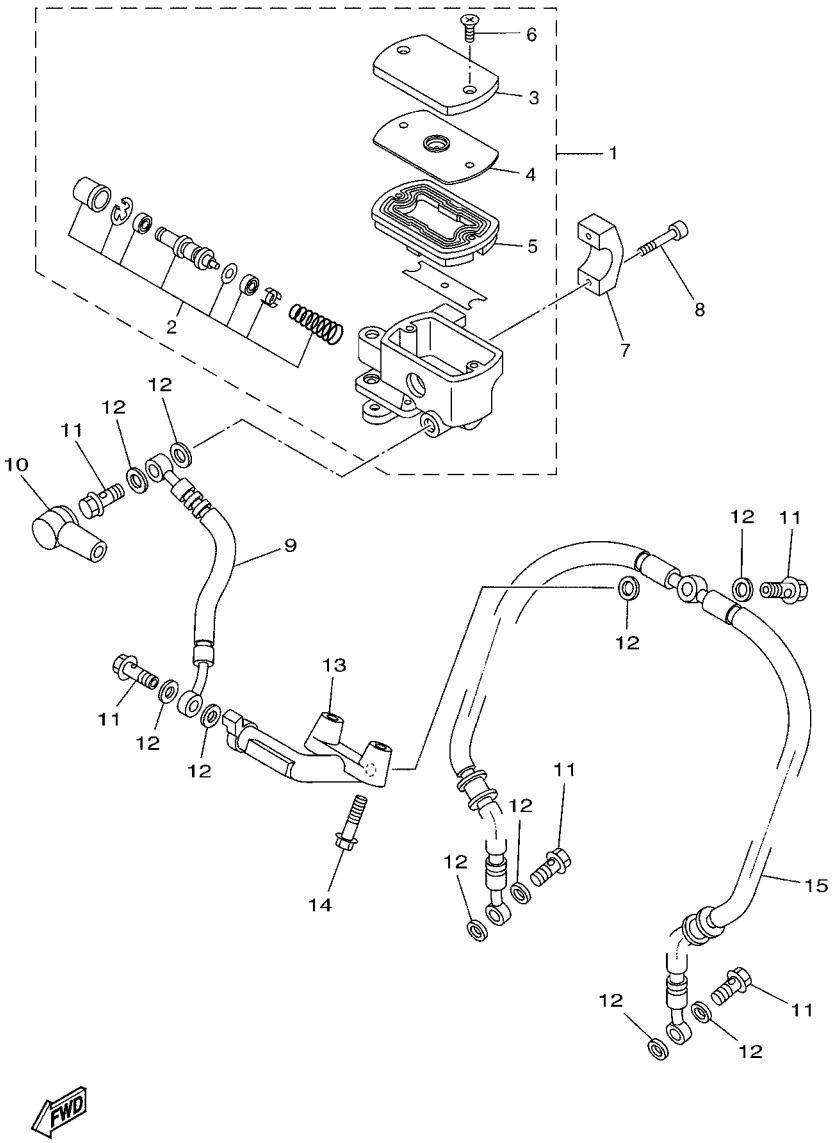

23S1100-G350

FIG. 33 FRONT MASTER CYLINDER

REF. NO.	PART NO.	DESCRIPTION	23S6	23S7				REMARKS
1	3D8–W2587–10	MASTER CYLINDER SUB ASSY	1	1				
2	2KR–W0041–00	.CYLINDER KIT, MASTER	1	1				
3	3D8–25852–10	.CAP, RESERVOIR	1	1				
4	3D8–25855–00	.BUSH,DIAPHRAGM	1	1				
5	3D8–25854–00	.GASKET, DIAPHRAGM	1	1				
6	3D8–2589H–10	.SCREW	2	2				
7	4TR–25867–00	HOLDER	1	1				
8	91314–06025	BOLT, HEXAGON SOCKET HEAD	2	2				
9	5KS–25872–00	HOSE, BRAKE 1	1	1				
10	4L0–25862–01	BOOT, MASTER CYLINDER	1	1				
11	90401–10020	BOLT, UNION	5	5				
12	90430–10005	GASKET	10	10				
13	5KS–25885–00	JOINT	1	1				
14	95807–06030	BOLT, FLANGE	2	2				
15	5KS–25873–00	HOSE, BRAKE 2	1	1				

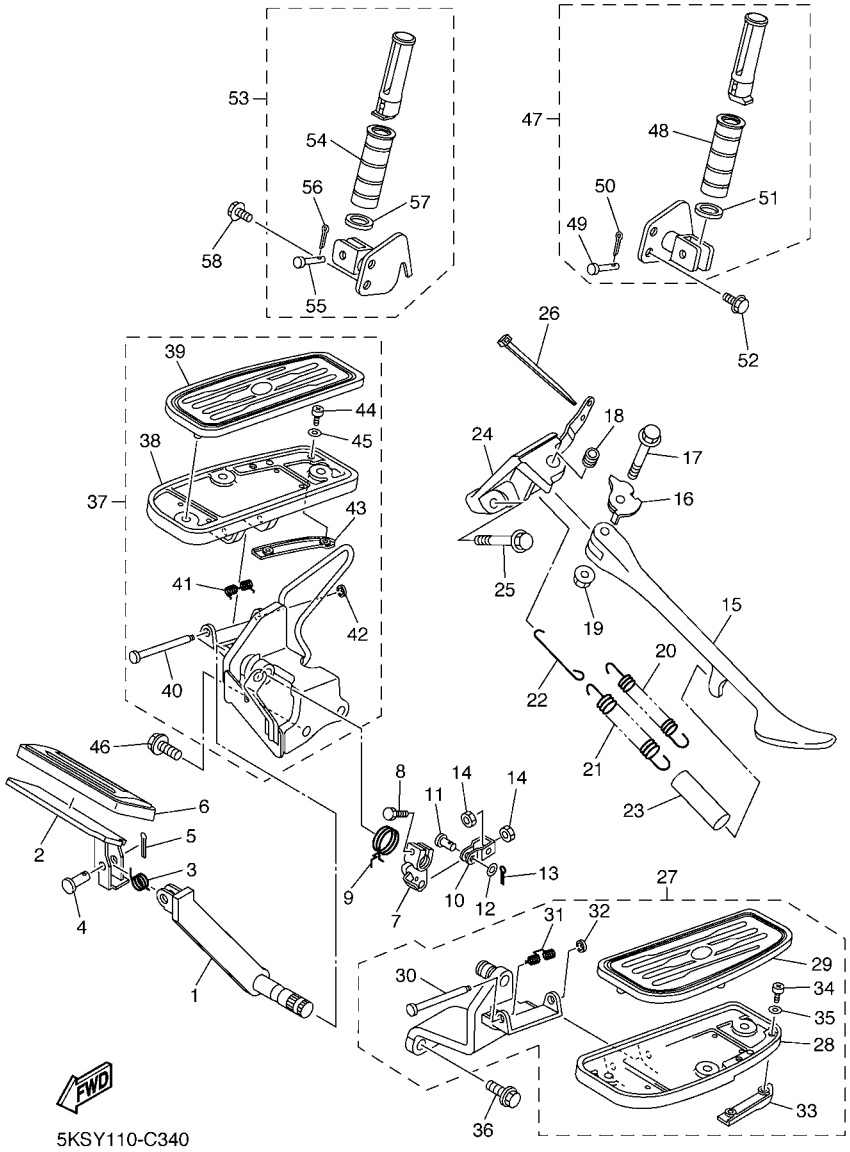

FIG. 34 STAND & FOOTREST

REF. NO.	PART NO.	DESCRIPTION	23S6	23S7				REMARKS
1	5KS–27211–00	PEDAL, BRAKE	1	1				
2	4NK–27242–00	PEDAL, BRAKE	1	1				
3	90508–18023	SPRING, TORSION	1	1				
4	91702–06022	PIN, CLEVIS	1	1				
5	91402–20012	PIN, COTTER	1	1				
6	4NK–27285–00	CAP	1	1				
7	5EL–27262–00	LEVER	1	1				
8	97004–06020	BOLT	1	1				
9	5EL–27216–00	SPRING, RETURN	1	1				
10	4BP–27222–02	JOINT	1	1				
11	90240–08124	PIN, CLEVIS	1	1				
12	90201–08083	WASHER, PLATE	1	1				
13	91401–20012	PIN, COTTER	1	1				
14	95307–08700	NUT	2	2				
15	4KU–27311–13	STAND, SIDE	1	1				
16	5EL–27322–01	WASHER	1	1				
17	90105–10012	BOLT, FLANGE	1	1				
18	90387–1003G	COLLAR	1	1				
19	95607–10200	NUT, U FLANGE	1	1				
20	90506–23490	SPRING, TENSION	1	1				
21	90506–29507	SPRING, TENSION	1	1				
22	5EL–27315–00	LINK, SIDE STAND	1	1				
23	90445–16641	HOSE (L60)	1	1				
24	5EL–27321–00	BRACKET, SIDE STAND	1	1				
25	90105–10157	BOLT, FLANGE	2	2				
26	1UA–82591–00	BAND	1	1				
27	5KS–27410–10	FRONT FOOTREST ASSY (LEFT)	1	1				

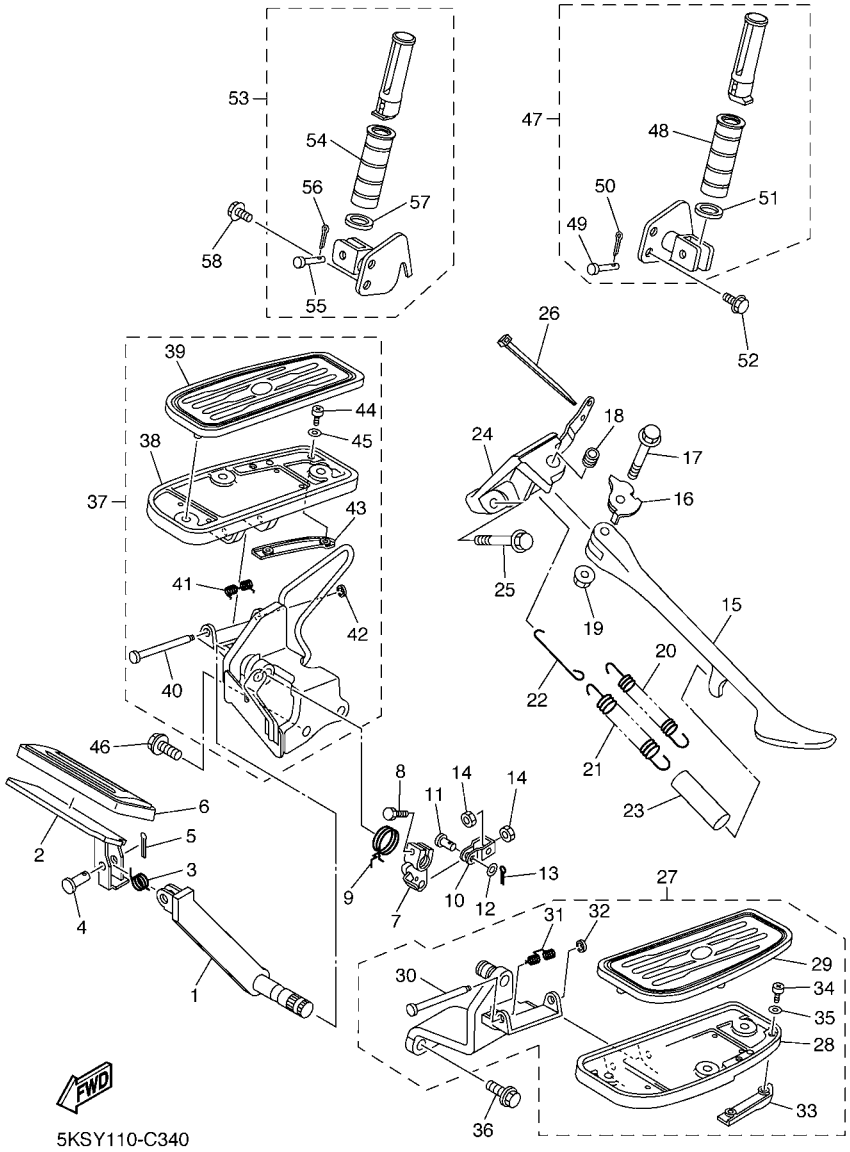

FIG. 34 STAND & FOOTREST

REF. NO.	PART NO.	DESCRIPTION	23S6	23S7				REMARKS
28	4NK–27451–10	.FOOTREST	1	1				
29	4XY–27413–01	.COVER, FOOTREST	1	1				
30	3D8–27427–00	.SHAFT	1	1				
31	4NK–27426–00	.SPRING, RETURN	1	1				
32	99001–06600	.CIRCLIP	1	1				
33	4WM–27496–00	.MOLE 1	1	1				
34	90157–05095	.SCREW, PAN HEAD	2	2				
35	92907–05200	.WASHER	2	2				
36	90105–102A3	BOLT, FLANGE	2	2				
37	5KS–27420–10	FRONT FOOTREST ASSY (RIGHT)	1	1				
38	4NK–27461–10	.FOOTREST	1	1				
39	4XY–27423–01	.COVER, FOOTREST	1	1				
40	3D8–27427–00	.SHAFT	1	1				
41	4NK–27426–00	.SPRING, RETURN	1	1				
42	99001–06600	.CIRCLIP	1	1				
43	4WM–27497–00	.MOLE 2	1	1				
44	90157–05095	.SCREW, PAN HEAD	2	2				
45	92907–05200	.WASHER	2	2				
46	90105–102A3	BOLT, FLANGE	2	2				
47	5EL–27430–00	REAR FOOTREST ASSY 1	1	1				
48	4WM–27433–00	.COVER, REAR FOOTREST	1	1				
49	91701–06032	.PIN	1	1				
50	91401–20012	.PIN, COTTER	1	1				
51	90201–210U0	.WASHER, PLATE	1	1				
52	90105–082A5	BOLT, FLANGE	2	2				
53	5EL–27440–00	REAR FOOTREST ASSY 2	1	1				
54	4WM–27433–00	.COVER, REAR FOOTREST	1	1				

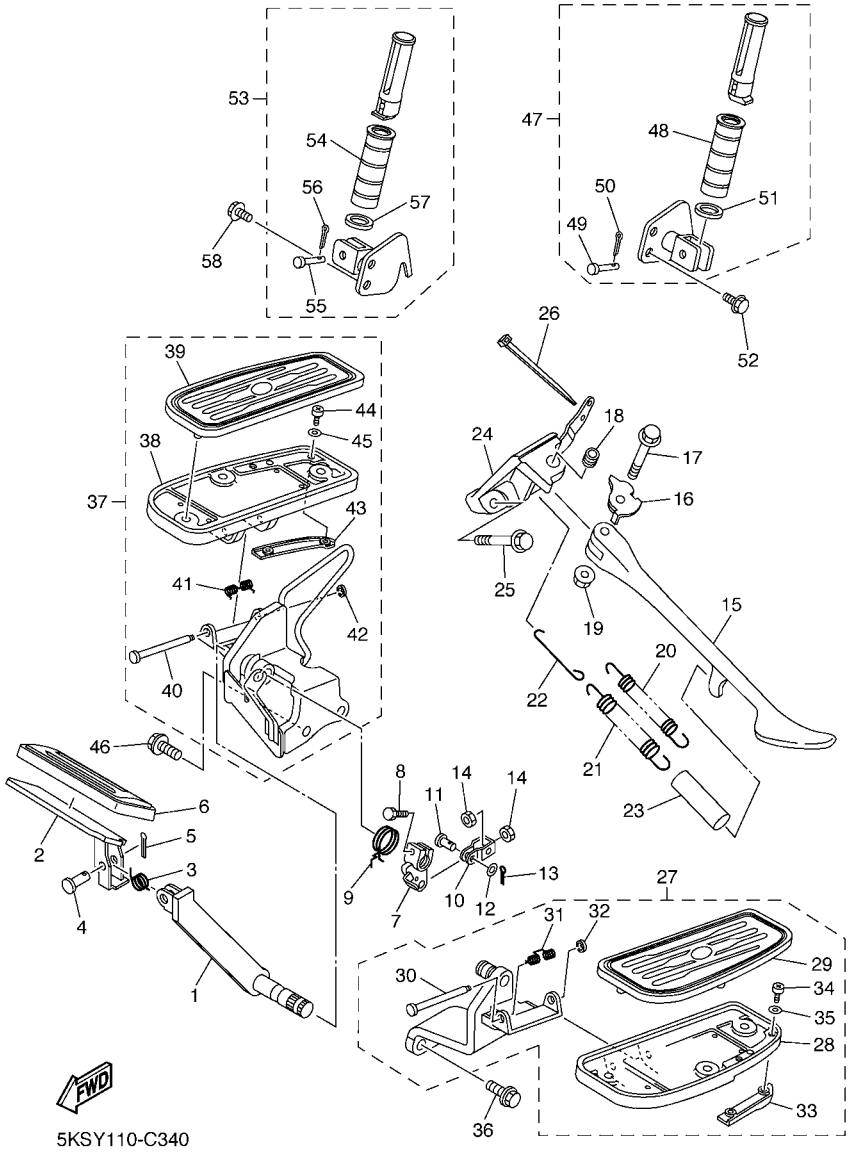

FIG. 34 STAND & FOOTREST

REF. NO.	PART NO.	DESCRIPTION	23S6	23S7				REMARKS
55	91701–06032	.PIN	1	1				
56	91401–20012	.PIN, COTTER	1	1				
57	90201–210U0	.WASHER, PLATE	1	1				
58	90105–082A5	BOLT, FLANGE	2	2				

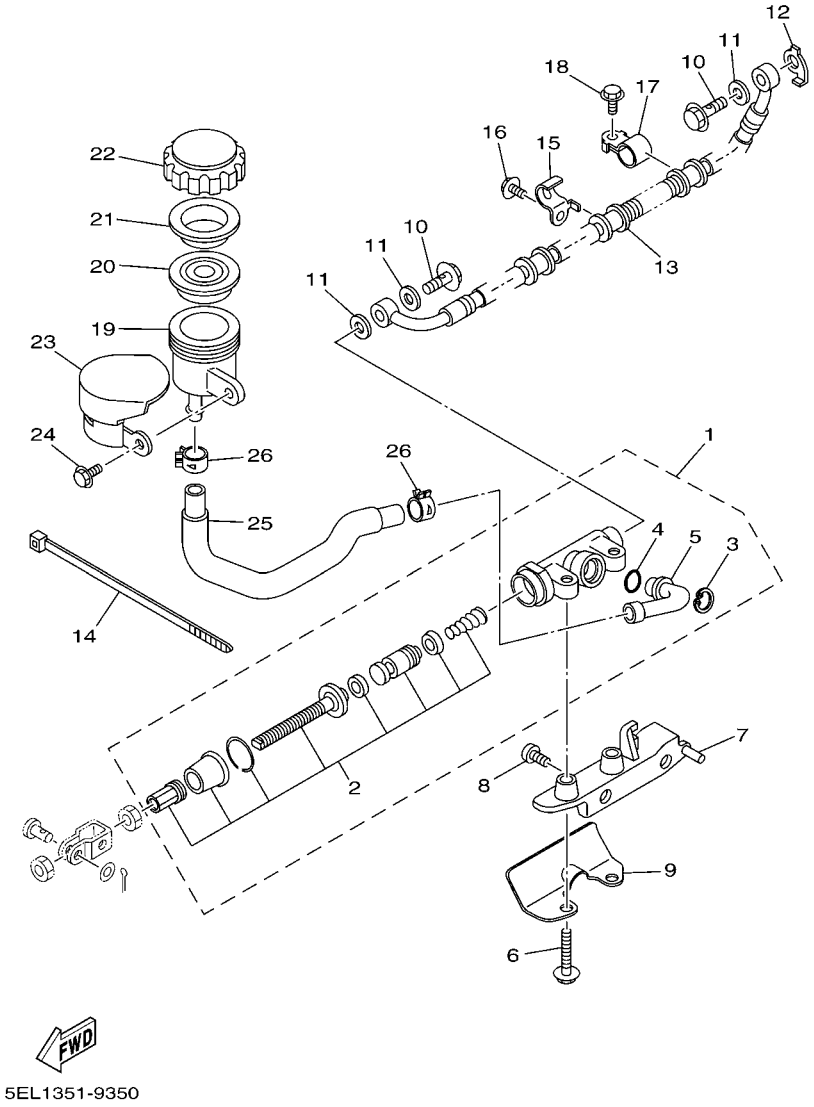

FIG. 35 REAR MASTER CYLINDER

REF. NO.	PART NO.	DESCRIPTION	23S6	23S7				REMARKS
1	5EL–2583V–00	RR. MASTER CYLINDER ASSY.	1	1				
2	5EL–W0042–50	.CYLINDER KIT, MASTER	1	1				
3	2VN–25866–00	.CIRCLIP	1	1				
4	93210–15620	.O-RING	1	1				
5	3LD–2582A–00	.JOINT	1	1				
6	95027–08035	BOLT, FLANGE	2	2				
7	5EL–25867–01	BRACKET, MASTER CYLINDER	1	1				
8	92014–08016	BOLT, BUTTON HEAD	2	2				
9	5EL–27491–00	PROTECTOR	1	1				
10	90401–10020	BOLT, UNION	2	2				
11	90430–10005	GASKET	3	3				
12	5EL–25844–00	WASHER, LOCK	1	1				
13	5EL–2581J–01	HOSE, BRAKE 4	1	1				
14	1UA–82591–00	BAND	7	7				
15	3XV–25876–00	HOLDER, BRAKE HOSE 2	1	1				
16	95027–06010	BOLT, FLANGE	1	1				
17	90461–10127	CLAMP	1	1				
18	95027–06010	BOLT, FLANGE	1	1				
19	31A–25894–01	TANK, RESERVOIR	1	1				
20	360–25854–01	GASKET, DIAPHRAGM	1	1				
21	2GU–25855–00	BUSH,DIAPHRAGM	1	1				
22	2KF–25852–50	CAP, RESERVOIR	1	1				
23	5EL–25888–00	COVER, RESERVOIR TANK	1	1				
24	95027–06016	BOLT, FLANGE	1	1				
25	5EL–25895–00	HOSE, RESERVOIR	1	1				
26	90467–14057	CLIP	2	2				

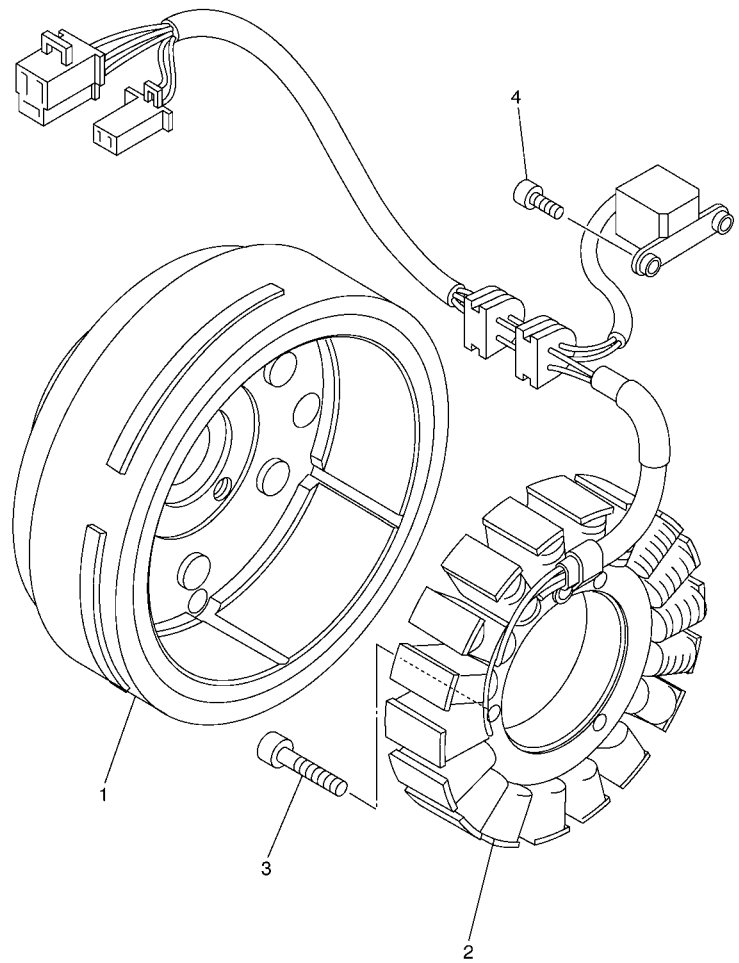

5PBJ100-C360

FIG. 36 GENERATOR

REF. NO.	PART NO.	DESCRIPTION	23S6	23S7				REMARKS
1	5KS–81450–00	ROTOR ASSY	1	1				
2	5KS–81410–01	STATOR ASSY	1	1				
3	91317–06030	BOLT	3	3				
4	91317–05012	BOLT	2	2				

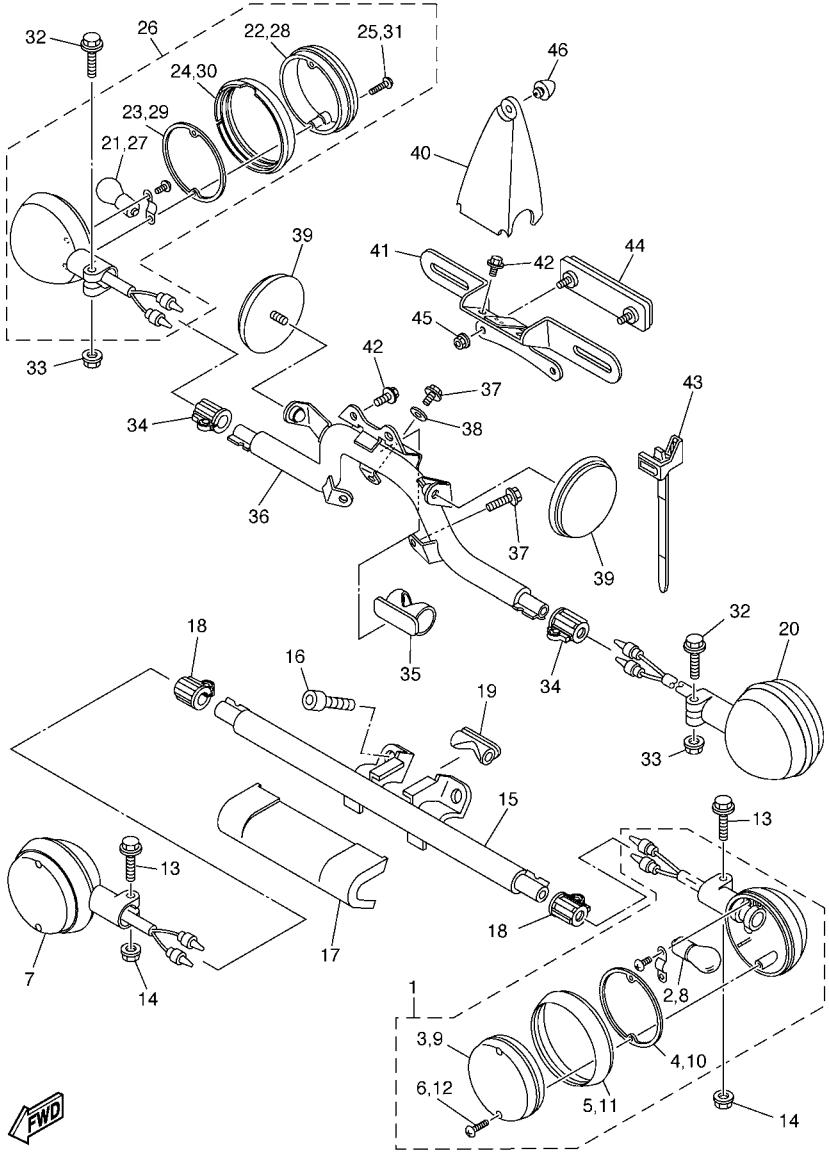

FIG. 37 FLASHER LIGHT

REF. NO.	PART NO.	DESCRIPTION	23S6	23S7				REMARKS
1	5YS–83310–00	FRONT FLASHER LIGHT ASSY 1	1	1				
2	5VN–83311–00	.BULB, FLASHER (12V-23/8W)	1	1				
3	5VN–83312–10	.LENS, FLASHER	1	1				
4	1D6–83313–00	.GASKET, FLASHER LENS	1	1				
5	1D6–83363–00	.LENS, RIM	1	1				
6	57M–83358–00	.SCREW, SPECIAL	2	2				
7	5YS–83320–00	FRONT FLASHER LIGHT ASSY 2	1	1				
8	5VN–83311–00	.BULB, FLASHER (12V-23/8W)	1	1				
9	5VN–83312–20	.LENS, FLASHER	1	1				
10	1D6–83313–00	.GASKET, FLASHER LENS	1	1				
11	1D6–83363–10	.LENS, RIM	1	1				
12	57M–83358–00	.SCREW, SPECIAL	2	2				
13	95024–06030	BOLT, FLANGE	2	2				
14	95704–06500	NUT, FLANGE	2	2				
15	5BN–2317V–00	STAY 8	1	1				
16	91314–08016	BOLT, HEXAGON SOCKET HEAD	2	2				
17	4NK–23122–01	COVER, OUTER 1	1	1				
18	5VN–83321–00	DAMPER, FLASHER 1	2	2				
19	4NK–83345–00	PLUG, BLIND	1	1				
20	1D6–83330–00	REAR FLASHER LIGHT ASSY 1	1	1				
21	5VN–83311–10	.BULB, FLASHER (12V-21W)	1	1				
22	1D6–83312–20	.LENS, FLASHER	1	1				
23	1D6–83313–00	.GASKET, FLASHER LENS	1	1				
24	1D6–83363–10	.LENS, RIM	1	1				
25	57M–83358–00	.SCREW, SPECIAL	2	2				
26	1D6–83340–00	REAR FLASHER LIGHT ASSY 2	1	1				
27	5VN–83311–10	.BULB, FLASHER (12V-21W)	1	1				

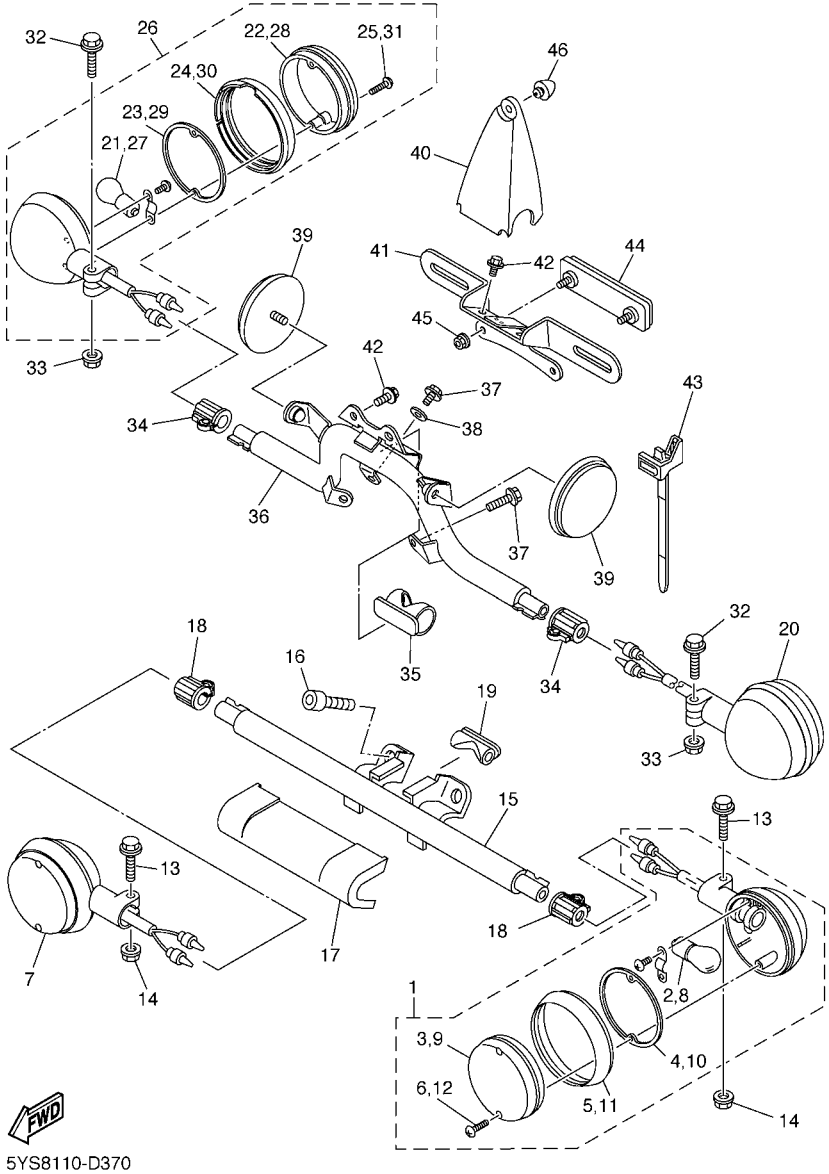

FIG. 37 FLASHER LIGHT

REF. NO.	PART NO.	DESCRIPTION	23S6	23S7				REMARKS
28	1D6–83312–10	.LENS, FLASHER	1	1				
29	1D6–83313–00	.GASKET, FLASHER LENS	1	1				
30	1D6–83363–00	.LENS, RIM	1	1				
31	57M–83358–00	.SCREW, SPECIAL	2	2				
32	95024–06030	BOLT, FLANGE	2	2				
33	95704–06500	NUT, FLANGE	2	2				
34	5VN–83321–00	DAMPER, FLASHER 1	2	2				
35	4NK–83345–00	PLUG, BLIND	1	1				
36	5KS–2317W–20	STAY, 9	1	1				
37	95024–06012	BOLT, FLANGE	3	3				
38	90201–06043	WASHER, PLATE	1	1				
39	449–85131–02	REFLECTOR, REAR 1	2	2				
40	5BN–84703–00	BRACKET	1	1				
41	5BN–84751–00	BRACKET, LICENSE	1	1				
42	95027–06010	BOLT, FLANGE	4	4				
43	90464–25002	CLAMP	1	1				
44	1FK–85130–00	REAR REFLECTOR ASSY	1	1				
45	95707–05500	NUT, FLANGE	2	2				
46	42U–21639–00	DAMPER 2	1	1				

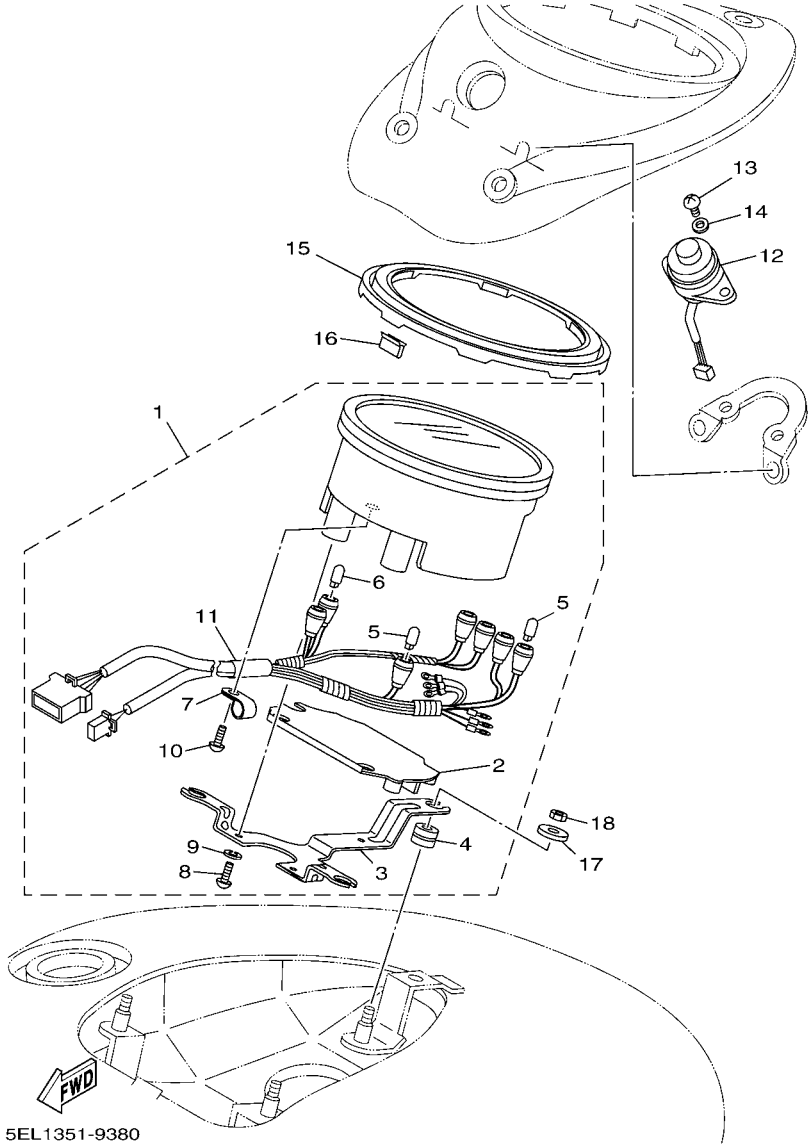

FIG. 38 METER

REF. NO.	PART NO.	DESCRIPTION	23S6	23S7				REMARKS
1	5KS–83500–70	SPEEDOMETER ASSY (MPH)	1	1				
2	4NK–83579–00	.COVER, METER 2	1	1				
3	5EL–83519–00	.BRACKET, METER	1	1				
4	4NK–83523–00	.DAMPER	3	3				
5	2GV–83517–00	.BULB (12V-1.7W T6.5)	5	5				
6	4NK–83517–00	.BULB (12V-1.4W, T6.5)	2	2				
7	5EL–8357E–00	.CLAMP	1	1				
8	98507–04010	.SCREW, PAN HEAD	3	3				
9	92907–04100	.WASHER, SPRING	3	3				
10	97707–40012	.SCREW, TAPPING	1	1				
11	5EL–83509–00	.SOCKET CORD ASSY	1	1				
12	4NK–8358J–00	SWITCH, METER CONTROL	1	1				
13	98507–05012	SCREW, PAN HEAD	2	2				
14	92907–05600	WASHER, PLATE	2	2				
15	5EL–28346–00	MOLE 2	1	1				
16	1FK–2171H–00	GUIDE	8	8				
17	90201–05036	WASHER, PLATE	3	3				
18	95307–05600	NUT	3	3				

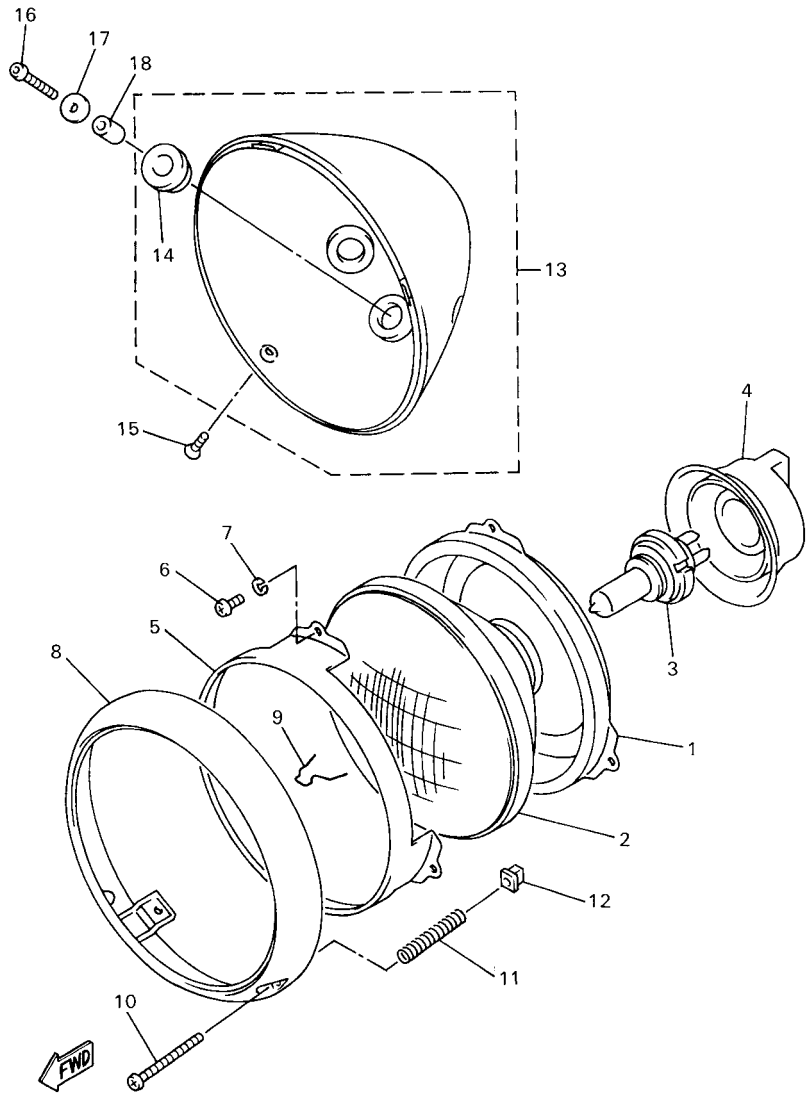

4NK110-6460

FIG. 39 HEADLIGHT

REF. NO.	PART NO.	DESCRIPTION	23S6	23S7				REMARKS
1	4NK–84394–00	RING, MOUNTING	1	1				
2	4NK–84320–00	LENS ASSY	1	1				
3	2F9–84314–00	BULB (12V-60/55W)	1	1				(H4)HALOGEN
4	3SX–84397–00	COVER, SOCKET	1	1				
5	2F9–84395–00	RING, RETAINING	1	1				
6	98502–04008	SCREW, PAN HEAD	3	3				
7	92902–04100	WASHER, SPRING	3	3				
8	4NK–84315–00	RIM, HEADLIGHT	1	1				
9	290–84124–21	SPRING, SET	1	1				
10	341–84331–60	SCREW, RIM ADJUSTING	2	2				
11	5G2–84332–60	SPRING, SCREW	2	2				
12	198–84334–60	NUT, ADJUSTING	2	2				
13	5KS–84330–00	BODY ASSY	1	1				
14	42X–84366–00	.DAMPER, HEADLIGHT 1	3	3				
15	98704–05012	SCREW, FLAT HEAD	2	2				
16	92017–06025	BOLT, BUTTON HEAD	3	3				
17	90201–060A3	WASHER, PLATE	3	3				
18	90387–0610J	COLLAR	3	3				

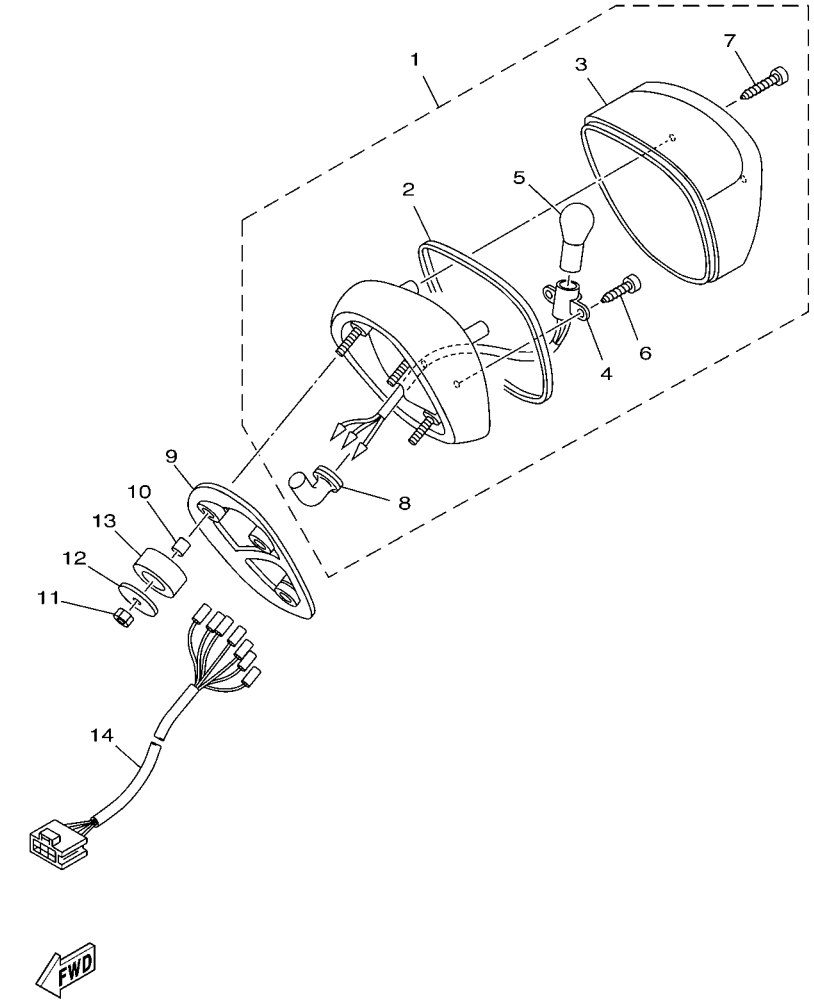

5BN4351-8370

FIG. 40 TAILLIGHT

REF. NO.	PART NO.	DESCRIPTION	23S6	23S7				REMARKS
1	5BN–84700–01	TAILLIGHT ASSY	1	1				
2	4NK–84702–00	.GASKET,TAILLENS	1	1				
3	4NK–84721–00	.LENS, TAILLIGHT	1	1				
4	5BN–84735–00	.CORD ASSY	1	1				
5	256–84714–60	.BULB (12V-21/5W)	1	1				
6	97707–40516	.SCREW, TAPPING	2	2				
7	97780–40525	.SCREW, TAPPING	3	3				
8	5BN–84154–00	.GROMMET	1	1				
9	4NK–84527–01	DAMPER	1	1				
10	90387–07038	COLLAR	3	3				
11	95307–06600	NUT	3	3				
12	90201–065G8	WASHER, PLATE	3	3				
13	5BN–84553–00	DAMPER	3	3				
14	5KS–84717–10	CORD, TAILLIGHT	1	1				

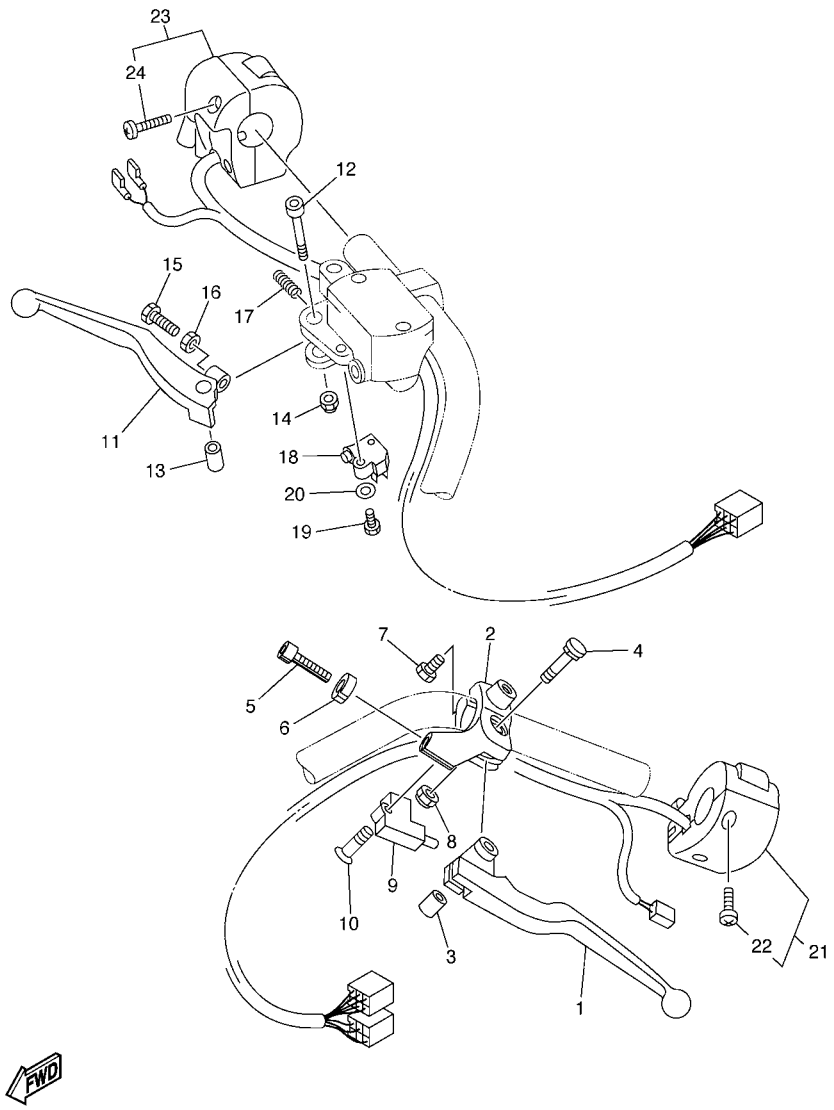

5YS8110-D410

FIG. 41 HANDLE SWITCH & LEVER

REF. NO.	PART NO.	DESCRIPTION	23S6	23S7				REMARKS
1	5BN–83912–00	LEVER 1	1	1				
2	5BN–82911–00	HOLDER, LEVER 1	1	1				
3	4TR–83913–00	COLLAR, LEVER 1	1	1				
4	4TR–83945–00	BOLT, LEVER	1	1				
5	90123–08046	BOLT	1	1				
6	90179–08148	NUT	1	1				
7	97004–06020	BOLT	1	1				
8	95604–06100	NUT, U	1	1				
9	3YX–82917–01	SWITCH	1	1				
10	98707–03020	SCREW, FLAT HEAD	1	1				
11	5BN–83922–00	LEVER 2	1	1				
12	90110–06074	BOLT, HEXAGON SOCKET HEAD	1	1				
13	36Y–83913–01	COLLAR, LEVER 1	1	1				
14	95607–06100	NUT, U	1	1				
15	90149–06131	SCREW	1	1				
16	90170–06010	NUT	1	1				
17	90501–10312	SPRING, COMPRESSION	1	1				
18	36Y–83980–01	FRONT STOP SWITCH ASSY	1	1				
19	98507–04016	SCREW, PAN HEAD	1	1				
20	92907–04600	WASHER	1	1				
21	5KS–83973–10	SWITCH, HANDLE 3	1	1				
22	98507–05025	.SCREW, PAN HEAD	2	2				
23	5KS–83975–10	SWITCH, HANDLE 2	1	1				
24	98507–05025	.SCREW, PAN HEAD	2	2				

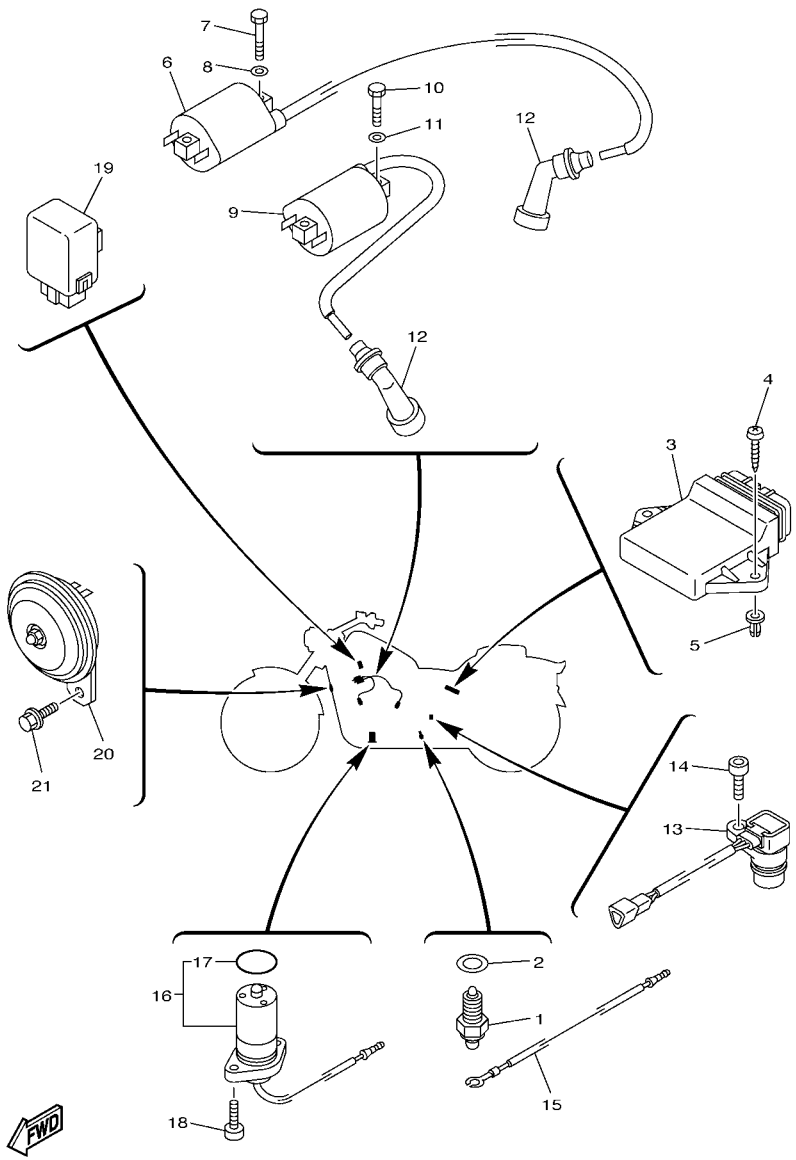

FIG. 42 ELECTRICAL 1

REF. NO.	PART NO.	DESCRIPTION	23S6	23S7				REMARKS
1	4KM–82540–00	NEUTRAL SWITCH ASSY	1	1				
2	90430–10148	GASKET	1	1				
3	5KS–82305–30	IGNITOR UNIT ASSY	1	1				
4	97707–60016	SCREW, TAPPING	2	2				
5	90338–08226	PLUG	2	2				
6	5EL–82310–00	IGNITION COIL ASSY	1	1				
7	97007–05020	BOLT	2	2				
8	92907–05600	WASHER, PLATE	2	2				
9	5EL–82320–00	IGNITION COIL ASSY	1	1				
10	97007–05020	BOLT	2	2				
11	92907–05600	WASHER, PLATE	2	2				
12	5EL–82370–00	PLUG CAP ASSY	2	2				
13	5EL–83755–01	SENSOR, SPEED	1	1				
14	91317–06012	BOLT	1	1				
15	5EL–82509–00	WIRE, SUB LEAD	1	1				
16	5EL–85720–01	OIL LEVEL GAUGE ASSY	1	1				
17	4XV–8A8E0–00	.O-RING	1	1				
18	91317–06016	BOLT	2	2				
19	5EL–83350–00	FLASHER RELAY ASSY	1	1				
20	5YS–83371–00	HORN	1	1				
21	90105–082A5	BOLT, FLANGE	1	1				

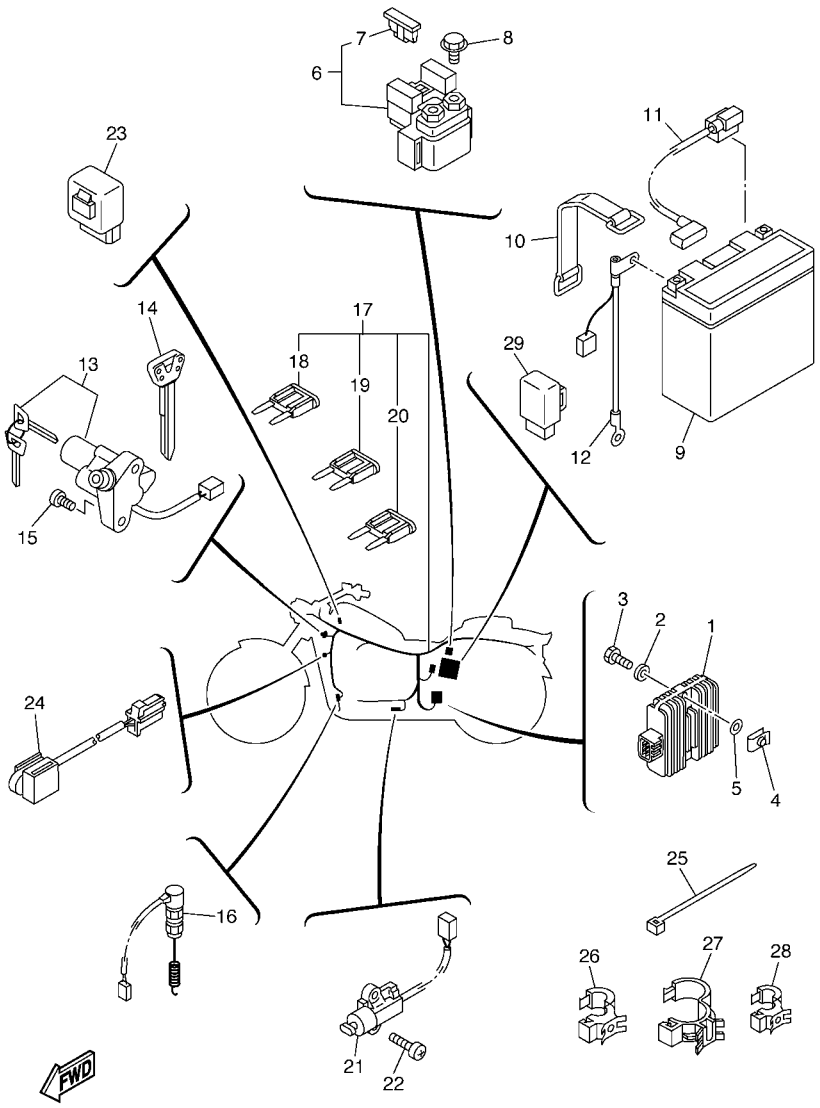

3B85100-E430

FIG. 43 ELECTRICAL 2

REF. NO.	PART NO.	DESCRIPTION	23S6	23S7				REMARKS
1	4XY–81960–00	RECTIFIER & REGULATOR ASSY	1	1				
2	90201–06727	WASHER, PLATE	2	2				
3	97007–06025	BOLT	2	2				
4	90183–06053	NUT, SPRING	2	2				
5	90202–05187	WASHER, PLATE	2	2				
6	4DN–81940–12	STARTER RELAY ASSY	1	1				
7	1AE–82151–00	.FUSE (30A-BL)	2	2				
8	95027–06008	BOLT, FLANGE	2	2				
9	5EA–82100–11	BATTERY ASSY (GS GT14B-4)	1	1				
10	118–82131–00	BAND, BATTERY	1	1				
11	5EL–82115–00	WIRE, PLUS LEAD	1	1				
12	5EL–82116–00	WIRE, MINUS LEAD	1	1				
13	4TR–82501–01	MAIN SWITCH STEERING LOCK	1	1				
14	4BH–82511–09	BLANK KEY	1	1				AP
15	90149–08002	SCREW	2	2				
16	5EL–82530–00	STOP SWITCH ASSY	1	1				
17	5KS–82590–50	WIRE HARNESS ASSY	1	1				
18	5JJ–82151–30	.FUSE (10A-BL)	3	3				
19	5JJ–82151–10	.FUSE (15A-BL)	3	3				
20	5JJ–82151–90	.FUSE (5A-BL)	3	3				
21	5RT–82566–40	SWITCH, SIDE STAND	1	1				
22	90157–05079	SCREW, PAN HEAD	2	2				
23	5KS–81950–00	RELAY ASSY	1	1				
24	5FU–82560–50	THERMO SWITCH ASSY	1	1				
25	1UA–82591–00	BAND	8	8				
26	90464–20191	CLAMP	1	1				
27	90464–25217	CLAMP	1	1				

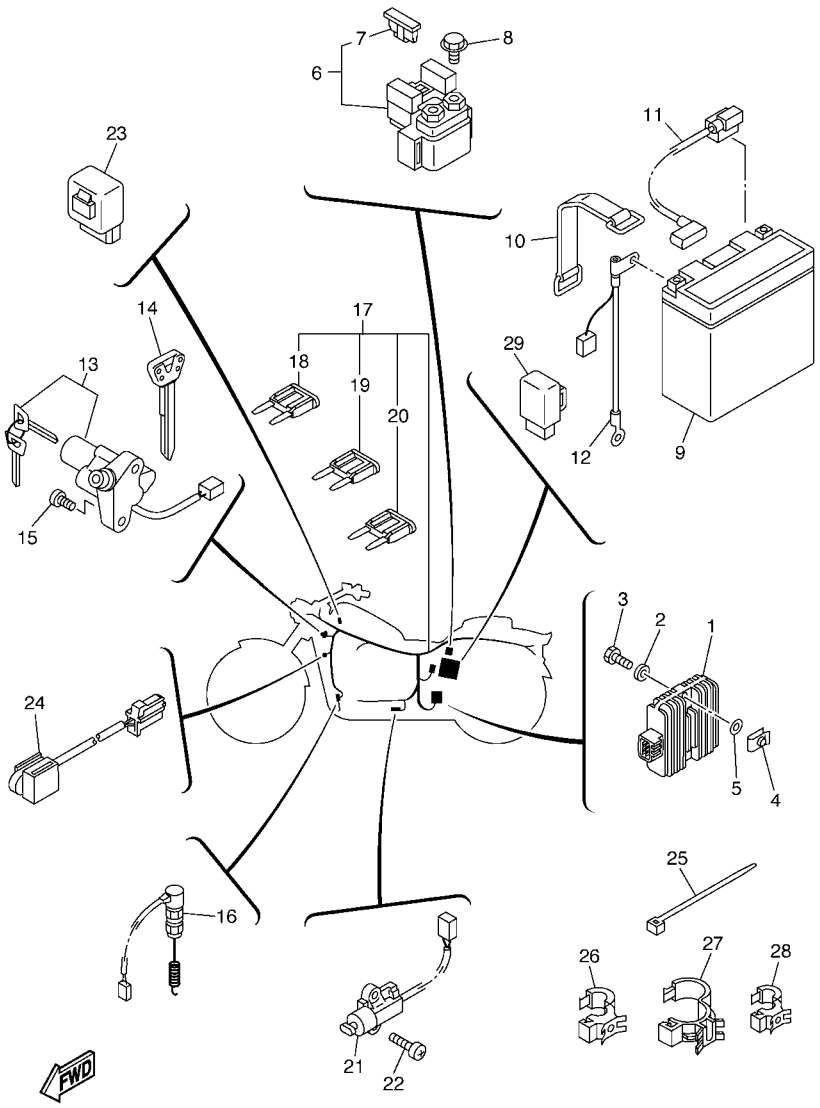

3B85100-E430

FIG. 43 ELECTRICAL 2

REF. NO.	PART NO.	DESCRIPTION	23S6	23S7				REMARKS
28	90464–15192	CLAMP	1	1				
29	4XV–8195A–00	RELAY ASSY	1	1				

PART NO.	REF. NO.
5YS–11101–00	1 – 1
4X7–1111F–00	1 – 28
5YS–1111H–00	1 – 16
5EL–1112M–00	1 – 33
4X7–11133–10	1 – 3
5EL–11142–01	2 – 12
42X–11145–00	5 – 12
5EL–11152–00	2 – 11
42X–11165–00	1 – 19
5EL–11166–00	8 – 38
5EL–11181–00	1 – 6
5YS–11185–00	1 – 18
5EL–11186–00	2 – 10
42H–11186–02	1 – 22
5EL–11187–01	1 – 23
4X7–11187–02	1 – 24
5EL–11190–00	2 – 9
214–11198–01	6 – 20
	23 – 27
5YS–11311–00	2 – 1
5EL–11351–01	2 – 5
4X7–11363–01	1 – 7
5EL–11411–10	3 – 1
4X7–11534–00	5 – 2
4X7–11536–00	5 – 1
5EL–11540–01	5 – 5
5EL–11550–01	5 – 6
1TA–11610–00	3 – 6
5EL–11631–10	3 – 5
4WM–11633–00	3 – 7
5EL–11650–10	3 – 9
4X7–11654–01	3 – 10
4X7–11656–00	3 – 12
5G5–11656–00	3 – 16
4X7–11656–10	3 – 12
5G5–11656–10	3 – 16
4X7–11656–20	3 – 12
5G5–11656–20	3 – 16
4X7–11656–30	3 – 12
4X7–11656–40	3 – 12
2J2–12111–01	4 – 1
4X7–12116–00	4 – 3
4X7–12117–00	4 – 6
4X7–12118–00	4 – 7
341–12119–02	4 – 5
5A8–12121–00	4 – 2
42X–12151–00	4 – 8
4X7–12156–01	4 – 9

PART NO.	REF. NO.
4X7–12159–00	4 – 10
5EL–12171–00	5 – 10
5EL–12176–00	5 – 17
5EL–12181–00	5 – 11
5EL–12210–01	5 – 19
4FM–12213–00	2 – 7
	5 – 22
5EL–12214–00	5 – 21
5KS–12215–00	2 – 6
5EL–12228–00	5 – 20
5EL–12231–00	5 – 24
3YL–12232–00	21 – 17
5EL–12241–01	5 – 25
5EL–12247–00	5 – 7
5EL–12682–00	8 – 55
4X7–13171–00	6 – 10
5EL–13300–01	6 – 1
10L–13327–00	6 – 7
4X7–13354–00	3 – 3
4X7–13355–00	6 – 5
5EL–13405–00	6 – 13
5EL–13406–00	6 – 14
4X7–13440–01	7 – 1
5EL–13447–00	7 – 4
5EL–13448–00	7 – 5
5EL–13474–00	8 – 7
4G0–13490–01	7 – 11
5EL–13542–00	10 – 21
5EL–13544–01	10 – 19
16G–13569–00	8 – 3
5EL–13586–00	8 – 1
5EL–13596–00	8 – 2
5KS–13907–00	26 – 66
5EL–14103–00	9 – 43
4XY–14105–00	9 – 14
5EL–14107–12	9 – 6
5EL–1410A–00	9 – 17
5KS–1410H–00	9 – 47
5KS–1410H–10	9 – 48
5EL–14112–00	9 – 4
22F–14117–00	9 – 65
3F9–14118–00	9 – 37
3F7–14133–00	9 – 67
812–14137–00	9 – 70
33M–14139–00	9 – 25
35H–14139–00	9 – 71
8A7–14139–00	9 – 82
5DM–14141–40	9 – 32

PART NO.	REF. NO.
4KM–14142–17	9 – 18
354–14147–00	9 – 23
5EL–14148–00	8 – 28
5EL–14149–00	9 – 75
895–14169–00	9 – 83
3LN–1416A–00	9 – 49
1FK–14179–00	9 – 79
127–14186–00	9 – 7
12R–14191–00	9 – 35
31H–14194–00	9 – 55
4KM–14194–00	9 – 22
5EL–14196–00	9 – 63
5EL–14197–10	9 – 68
5EL–14212–00	9 – 66
4KM–14216–00	9 – 33
	9 – 33
3G2–14231–23	9 – 8
1HX–14231–29	9 – 16
3G2–1423A–59	9 – 20
3G2–1423A–73	9 – 8
1HX–1423E–25	9 – 21
5EL–14251–00	9 – 76
5KS–14261–00	9 – 10
5EL–14283–00	8 – 9
4NK–14285–00	9 – 61
5EL–14294–10	8 – 12
5EL–14348–10	8 – 15
5EL–14349–10	8 – 14
5EL–1440F–00	8 – 33
5EL–14411–00	8 – 19
5EL–14413–00	12 – 39
5EL–14414–00	8 – 53
5EL–14417–02	8 – 20
5EL–14421–10	8 – 24
29N–14425–00	21 – 5
5EL–14431–00	8 – 31
5EL–14432–00	8 – 35
5EL–14437–00	8 – 22
5EL–14451–00	8 – 23
4TR–14452–00	8 – 26
5EL–14452–00	8 – 27
5EL–14453–00	8 – 45
5EL–14454–00	8 – 32
5EL–14455–00	8 – 34
	8 – 41
5EL–14462–00	8 – 37
5EL–14463–00	8 – 46
5EL–14477–00	8 – 18

PART NO.	REF. NO.
41R–14489–00	10 – 20
5EL–14499–00	8 – 49
22U–14561–00	9 – 44
583–14561–00	9 – 9
5DM–14561–00	9 – 11
5EL–14561–00	9 – 36
1FN–14565–00	9 – 28
4WM–14565–00	9 – 58
4XY–14568–00	26 – 48
5EL–14577–00	9 – 56
5EL–14592–00	9 – 60
5EL–14592–10	9 – 80
5EL–14610–10	10 – 1
3EG–14613–00	10 – 4
4TR–14613–00	10 – 5
5EL–14615–01	10 – 3
5KS–14620–00	10 – 8
5EL–14624–00	10 – 10
5YS–14710–00	10 – 13
4NK–14714–00	10 – 2
	10 – 9
4KM–14714–01	10 – 28
5KS–14755–00	10 – 14
5EL–14803–10	10 – 18
5EL–14806–00	10 – 17
5EL–14871–00	10 – 27
5EL–14872–00	10 – 26
5EL–14881–00	10 – 29
5EL–14882–00	10 – 23
5EL–14884–00	10 – 25
4WM–14896–00	26 – 55
5YS–14900–00	9 – 1
5YS–14901–00	9 – 2
5YS–14902–00	9 – 3
5YS–14906–00	9 – 1
5EL–1490H–00	9 – 31
5EL–1490J–00	9 – 5
5EL–14918–00	9 – 19
5GK–1491A–00	9 – 86
4KM–14933–00	9 – 13
5EL–14935–00	9 – 51
55X–14937–00	9 – 85
1A8–14953–00	9 – 69
256–14956–01	9 – 45
5DM–14985–00	9 – 26
5EL–14987–00	8 – 8
5EL–14987–10	9 – 57
5EL–14987–20	9 – 84

PART NO.	REF. NO.
11H–14991–00	9 – 54
5EL–14991–00	9 – 64
5YS–15100–00	11 – 1
2H7–15361–00	12 – 8
3F9–15362–00	12 – 9
4X7–15388–00	12 – 25
5EL–15411–00	12 – 1
5EL–15417–00	12 – 21
5EL–15421–00	12 – 23
5EL–15423–00	12 – 37
5EL–15451–00	12 – 13
5EL–15462–00	12 – 27
5EL–15484–00	12 – 11
5EL–15485–00	6 – 21
4X7–15491–00	11 – 14
5EL–15512–00	13 – 5
5EL–15515–00	13 – 1
5EL–15517–11	13 – 2
24W–15521–00	13 – 4
5EL–15590–00	13 – 6
4X7–16111–00	14 – 1
4X7–16150–02	14 – 21
2JN–16154–00	14 – 22
22U–16321–00	14 – 28
4X7–16324–00	14 – 26
1TA–16325–00	14 – 29
1TA–16334–00	14 – 31
1TA–16335–00	14 – 33
5EL–16340–01	14 – 12
2H7–16341–00	14 – 9
2H7–16343–00	14 – 10
1TA–16351–01	14 – 30
1TA–16352–00	14 – 34
4X7–16356–00	14 – 18
5EL–16357–00	14 – 17
5EL–16371–00	14 – 23
4X7–16383–01	14 – 25
4X7–16384–00	14 – 24
4X7–16385–00	14 – 27
2H7–16395–01	14 – 8
2H7–16396–00	14 – 6
5EL–17121–00	15 – 5
5EL–17141–00	15 – 2
5EL–17151–00	15 – 6
4X7–17211–00	15 – 21
5EL–17221–00	15 – 13
5EL–17231–00	15 – 17
5EL–17241–00	15 – 20

PART NO.	REF. NO.
5EL–17251–00	15 – 16
5EL–17402–00	15 – 12
5EL–17411–00	15 – 1
4X7–17524–00	16 – 7
42X–17526–01	16 – 4
31A–17527–00	16 – 5
3H5–17529–00	16 – 8
4X7–17531–00–15	16 – 9
4X7–17531–00–30	16 – 9
4X7–17531–00–40	16 – 9
4X7–17531–00–50	16 – 9
1J7–17537–Y0–30	23 – 9
1J7–17537–Y0–40	23 – 9
1J7–17537–Y0–50	23 – 9
4X7–17551–00	16 – 15
4X7–17554–00	16 – 18
3B8–17556–00	16 – 22
5EL–17558–00	16 – 21
5EL–17582–00	15 – 22
5EL–17583–00	15 – 25
56W–17590–00	23 – 28
3B8–17631–00	16 – 28
5KS–18110–00	18 – 12
4TR–18112–00	18 – 19
22N–18113–00	18 – 13
4NK–18113–10	18 – 15
4DN–18115–20	18 – 22
5EL–18120–00	18 – 1
5EL–18140–00	18 – 3
2H9–18154–00	18 – 14
	18 – 20
5EL–18185–00	17 – 3
5EL–18511–00	17 – 8
5EL–18512–00	17 – 9
5EL–18513–00	17 – 10
5EL–18531–00	17 – 11
4X7–18536–00	17 – 12
5EL–18540–00	17 – 1
136–18542–00	17 – 7
5KS–21110–71	19 – 1
5EL–21150–00	19 – 2
5GK–2118K–00	26 – 5
4DN–21268–00	19 – 7
	26 – 41
4R8–21308–01	19 – 37
5EL–21314–00	19 – 21
5EL–21316–00	19 – 26
5EL–21317–00	19 – 14

PART NO.	REF. NO.
5EL–21318–00	19 – 6
5KS–21460–00	19 – 33
4X7–2149Y–00	9 – 81
5KS–21510–00–P6	20 – 1
1D6–2153E–00	20 – 15
5BN–21565–00	20 – 3
	20 – 4
5YS–21570–A0	20 – 2
5KS–21587–00	20 – 8
5KS–21588–00	20 – 9
5KS–21597–00	20 – 6
5KS–21598–00	20 – 7
30X–21621–00	21 – 2
5KS–21629–00	20 – 25
42U–21639–00	37 – 46
4WM–2164F–00	20 – 22
4WM–2164G–00	20 – 23
5YS–2165A–90	20 – 14
5KS–21668–00	22 – 31
5KS–21669–00	20 – 18
5KS–21669–10	20 – 19
5KS–21669–20	20 – 20
5EL–21686–00	19 – 42
55K–21708–00	21 – 20
5KS–21711–00–PD	21 – 14
5KS–21711–00–PH	21 – 14
3XV–21717–00	26 – 21
5EL–2171A–00	26 – 33
5EL–2171E–00	19 – 28
1FK–2171H–00	38 – 16
1FK–2171L–00	26 – 19
5EL–2171X–00	19 – 30
5EL–2171Y–00	21 – 15
5KS–21721–00–PD	21 – 23
5KS–21721–00–PH	21 – 23
5KS–2172A–00	21 – 24
5EL–2172A–10	21 – 8
5EL–2172F–00	21 – 9
5EL–2172G–00	21 – 10
5KS–2172K–00	21 – 44
5EL–2172L–00	21 – 45
5EL–2172M–00	21 – 50
5EL–21731–00	21 – 27
3SP–21732–00	8 – 10
	19 – 39
	20 – 16
	26 – 42
4NK–21735–00	20 – 17

PART NO.	REF. NO.
5EL–21741–00	21 – 47
5EL–21746–00	21 – 52
3BN–21747–00	19 – 29
	19 – 31
4TR–2175H–00	21 – 31
5P9–2176P–10	19 – 41
5KS–2177B–00	21 – 1
5EL–2177E–01	21 – 29
5KS–2177G–00	21 – 4
5EL–2178L–00	21 – 34
5P9–2179W–10	19 – 41
5KS–22110–02	22 – 1
4X7–22124–00	22 – 4
5EL–22129–00	22 – 5
5EL–22141–00	22 – 2
4KM–2217A–00	22 – 11
2KT–2217M–00	22 – 24
4VR–22184–00	22 – 10
5EL–22189–00	22 – 9
5KS–22210–60	22 – 32
5KS–23102–20	25 – 1
5KS–23103–20	25 – 20
5KS–23110–10	25 – 4
	25 – 23
1D0–23111–00	25 – 18
	25 – 37
5EL–23118–00	25 – 17
	25 – 36
5KS–23121–20	25 – 42
4NK–23122–01	37 – 17
4KM–23123–01	25 – 49
5KS–23123–20	25 – 44
4FM–23125–40	25 – 7
	25 – 26
5KS–23126–10	25 – 2
5KS–23131–20	25 – 43
5KS–23133–20	25 – 45
5KS–23136–10	25 – 21
5KS–23141–10	25 – 15
	25 – 34
4EB–23144–00	25 – 11
	25 – 30
4EB–23145–01	25 – 9
	25 – 28
36Y–23146–10	25 – 8
	25 – 27
4DW–23149–40	25 – 16
	25 – 35

PART NO.	REF. NO.
26H–23156–00	25 – 10
	25 – 29
509–23158–L0	25 – 13
	25 – 32
5BN–23163–00	25 – 46
5KS–23165–10	25 – 48
5KS–23170–10	25 – 6
	25 – 25
5BN–23171–00	25 – 5
	25 – 24
4YR–23173–00	25 – 12
	25 – 31
5BN–23174–01	24 – 19
5BN–2317J–00	24 – 20
5BN–2317V–00	37 – 15
5KS–2317W–20	37 – 36
278–23181–50	25 – 14
	25 – 33
43F–23188–10	25 – 19
	25 – 38
5BN–23193–00	25 – 3
	25 – 22
5KS–23340–10	25 – 40
5KS–23389–00	32 – 2
5BN–23394–01	25 – 47
1W1–23416–00	24 – 6
26H–23418–01	24 – 8
5VR–23441–00	24 – 16
1E6–23441–10–98	22 – 28
5VR–23442–00	24 – 15
3DM–23445–00	24 – 13
3FV–23462–00	24 – 5
5EL–23469–00	32 – 7
5EL–2411F–00	26 – 44
5EL–2412F–00	26 – 36
3HA–24141–00	19 – 40
5EL–2414G–00	26 – 40
5YS–2414H–00	26 – 23
5YS–2414J–00	26 – 24
5YS–2414K–00	26 – 25
5YS–2414N–00	26 – 26
23S–2416B–00	26 – 3
5EL–24170–00	26 – 52
23S–2417B–00	26 – 4
5RB–24180–00	26 – 50
2YK–24181–10	26 – 10
5EL–24182–00	26 – 6
4TR–24183–00	26 – 7

PART NO.	REF. NO.
5EL–24188–00	26 – 20
	26 – 43
5YS–24240–A0	26 – 2
5EL–24311–10	26 – 22
5EL–24312–20	26 – 49
5EL–24313–10	26 – 27
5EL–24315–10	26 – 56
5EL–24316–10	26 – 53
5EL–24317–10	26 – 54
5EL–24321–10	26 – 47
5EL–24322–10	26 – 65
4EB–24398–00	26 – 30
5EL–24411–00	9 – 12
4SV–24453–00	9 – 50
4WM–24500–02	26 – 12
4X8–24512–00	26 – 16
3AC–24523–00	26 – 13
3AJ–24534–01	26 – 14
1FK–24560–10	26 – 28
1FK–24566–00	26 – 29
5BN–24602–02	26 – 11
4NK–24602–12	26 – 11
5KS–24710–00	27 – 1
5YS–2471N–00	27 – 16
1T4–24741–00	27 – 4
22W–24741–00	27 – 3
	27 – 9
5YS–24742–00	27 – 13
5KS–24750–31	27 – 8
5KS–2475H–00	27 – 2
5YS–2475J–00	27 – 10
5KS–2475N–00	27 – 14
5KS–25168–00–MA	28 – 1
5KS–25181–00	28 – 9
5KS–25338–00–MA	30 – 1
5EL–25364–00	30 – 7
16G–25366–01	30 – 6
4H7–25377–00	30 – 20
5EL–25381–10	30 – 16
5MT–25398–00	28 – 7
	30 – 15
5MT–25398–10	28 – 7
	30 – 15
5MT–25398–20	28 – 7
	30 – 15
16G–25412–00	30 – 10
5KS–2580T–01	29 – 3
5KS–2580U–01	29 – 12

PART NO.	REF. NO.
5EL–2580W–00	31 – 3
5EL–25819–01	31 – 12
5EL–2581J–01	35 – 13
5PX–2581T–10	29 – 1
3LD–2582A–00	35 – 5
5KS–2582W–00	31 – 1
51J–25836–00	31 – 11
5EL–2583V–00	35 – 1
5EL–25844–00	35 – 12
3D8–25852–10	33 – 3
2KF–25852–50	35 – 22
3D8–25854–00	33 – 5
360–25854–01	35 – 20
2GU–25855–00	35 – 21
3D8–25855–00	33 – 4
4L0–25862–01	33 – 10
2VN–25866–00	35 – 3
4TR–25867–00	33 – 7
5EL–25867–01	35 – 7
5KS–25872–00	33 – 9
5KS–25873–00	33 – 15
3XV–25876–00	35 – 15
5KS–25885–00	33 – 13
5KS–25886–00	24 – 23
5EL–25888–00	35 – 23
31A–25894–01	35 – 19
5EL–25895–00	35 – 25
3D8–2589H–10	33 – 6
5JW–25914–10	29 – 6
	29 – 15
29L–25919–00	31 – 7
4BP–25919–00	29 – 9
	29 – 18
3HE–25924–00	31 – 8
3GM–25925–00	31 – 9
3YX–25929–00	29 – 10
	29 – 19
4TT–25937–00	29 – 7
	29 – 16
5KS–26111–11	32 – 1
4XY–26240–00	32 – 8
4NK–26241–00	32 – 5
5EL–26246–00	32 – 6
4NK–26280–10	32 – 14
4NK–26290–10	32 – 15
5KS–26311–10	32 – 9
5KS–26312–10	32 – 10
5EL–26331–00	32 – 16

PART NO.	REF. NO.
5KS–26335–00	32 – 12
1E6–26342–00	32 – 13
5KS–27211–00	34 – 1
5EL–27216–00	34 – 9
4BP–27222–02	34 – 10
4NK–27242–00	34 – 2
5EL–27262–00	34 – 7
4NK–27285–00	34 – 6
4KU–27311–13	34 – 15
5EL–27315–00	34 – 22
5EL–27321–00	34 – 24
5EL–27322–01	34 – 16
5KS–27410–10	34 – 27
4XY–27413–01	34 – 29
5KS–27420–10	34 – 37
4XY–27423–01	34 – 39
4NK–27426–00	34 – 31
	34 – 41
3D8–27427–00	34 – 30
	34 – 40
5EL–27430–00	34 – 47
4WM–27433–00	34 – 48
	34 – 54
5EL–27440–00	34 – 53
4NK–27451–10	34 – 28
4NK–27461–10	34 – 38
5EL–27491–00	35 – 9
4WM–27496–00	34 – 33
4WM–27497–00	34 – 43
5EL–28100–10	27 – 19
5EL–28346–00	38 – 15
5EL–46101–00	23 – 1
1J7–46117–Y0–25	23 – 18
1J7–46117–Y0–30	23 – 18
1J7–46117–Y0–40	23 – 18
1J7–46117–Y0–50	23 – 18
22U–46118–00–12	23 – 20
22U–46118–00–14	23 – 20
22U–46118–00–16	23 – 20
22U–46118–00–18	23 – 20
22U–46118–00–20	23 – 20
2H7–46122–00	23 – 8
4H7–46123–01	23 – 14
4H7–46125–00	23 – 11
1J7–46129–Y1	16 – 14
4H7–46152–00	23 – 17
5EL–46153–00	23 – 4
5EL–46154–00	23 – 31

PART NO.	REF. NO.
5EL–46171–00	23 – 30
4X7–46180–00	23 – 38
5EL–46297–00	23 – 32
5EL–8135E–00	16 – 23
5KS–81410–01	36 – 2
5KS–81450–00	36 – 1
5KS–81517–00	9 – 62
5EL–81815–00	13 – 17
5A8–81826–10	13 – 15
4XV–8182A–00	13 – 16
	13 – 18
5A8–81840–10	13 – 14
11H–81844–00	13 – 12
5A8–81847–10	13 – 13
1J7–81847–60	13 – 11
5EL–81890–01	13 – 10
4DN–81940–12	43 – 6
5KS–81950–00	43 – 23
4XV–8195A–00	43 – 29
4XY–81960–00	43 – 1
5EA–82100–11	43 – 9
4DH–82103–00	9 – 40
5EL–82115–00	43 – 11
5EL–82116–00	43 – 12
5Y1–82122–00	21 – 6
118–82131–00	43 – 10
3TJ–82131–00	21 – 40
1AE–82151–00	43 – 7
5JJ–82151–10	43 – 19
5JJ–82151–30	43 – 18
5JJ–82151–90	43 – 20
5KS–82305–30	42 – 3
5EL–82310–00	42 – 6
5EL–82320–00	42 – 9
5EL–82370–00	42 – 12
4TR–82501–01	43 – 13
5EL–82509–00	42 – 15
4BH–82511–09	43 – 14
5EL–82530–00	43 – 16
4KM–82540–00	42 – 1
5FU–82560–50	43 – 24
5RT–82566–40	43 – 21
5KS–82590–50	43 – 17
1UA–82591–00	34 – 26
	35 – 14
	43 – 25
5BN–82911–00	41 – 2
3YX–82917–01	41 – 9

PART NO.	REF. NO.
5YS–83310–00	37 – 1
5VN–83311–00	37 – 2
	37 – 8
5VN–83311–10	37 – 21
	37 – 27
1D6–83312–10	37 – 28
5VN–83312–10	37 – 3
1D6–83312–20	37 – 22
5VN–83312–20	37 – 9
1D6–83313–00	37 – 4
	37 – 10
	37 – 23
	37 – 29
5YS–83320–00	37 – 7
5VN–83321–00	37 – 18
	37 – 34
1D6–83330–00	37 – 20
1D6–83340–00	37 – 26
4NK–83345–00	37 – 19
	37 – 35
5EL–83350–00	42 – 19
57M–83358–00	37 – 6
	37 – 12
	37 – 25
	37 – 31
1D6–83363–00	37 – 5
	37 – 30
1D6–83363–10	37 – 11
	37 – 24
5YS–83371–00	42 – 20
5KS–83500–70	38 – 1
5EL–83509–00	38 – 11
2GV–83517–00	38 – 5
4NK–83517–00	38 – 6
5EL–83519–00	38 – 3
4NK–83523–00	38 – 4
1FK–83526–00	21 – 33
4NK–83579–00	38 – 2
5EL–8357E–00	38 – 7
4NK–8358J–00	38 – 12
5EL–83755–01	42 – 13
5FU–83790–20	9 – 41
5BN–83912–00	41 – 1
4TR–83913–00	41 – 3
36Y–83913–01	41 – 13
5BN–83922–00	41 – 11
4TR–83945–00	41 – 4
5KS–83973–10	41 – 21

PART NO.	REF. NO.
5KS–83975–10	41 – 23
36Y–83980–01	41 – 18
290–84124–21	39 – 9
5BN–84154–00	40 – 8
2F9–84314–00	39 – 3
4NK–84315–00	39 – 8
4NK–84320–00	39 – 2
5KS–84330–00	39 – 13
341–84331–60	39 – 10
5G2–84332–60	39 – 11
198–84334–60	39 – 12
42X–84366–00	39 – 14
4NK–84394–00	39 – 1
2F9–84395–00	39 – 5
3SX–84397–00	39 – 4
4NK–84527–01	40 – 9
5BN–84553–00	40 – 13
5BN–84700–01	40 – 1
4NK–84702–00	40 – 2
5BN–84703–00	37 – 40
256–84714–60	40 – 5
5KS–84717–10	40 – 14
4NK–84721–00	40 – 3
5BN–84735–00	40 – 4
5BN–84751–00	37 – 41
11H–85110–01	20 – 11
1FK–85130–00	37 – 44
449–85131–02	37 – 39
5EL–85720–01	42 – 16
5EL–85885–00	9 – 59
4XV–8A8E0–00	42 – 17
M12–T133A–00	21 – 7
2KR–W0041–00	33 – 2
5EL–W0042–50	35 – 2
4EB–W0045–00	29 – 8
	29 – 17
3XF–W0045–50	31 – 6
31A–W0047–00	31 – 5
4FU–W0047–00	29 – 5
	29 – 14
1J3–W0048–00	31 – 10
51L–W0048–00	29 – 11
	29 – 20
31A–W0057–00	31 – 4
5KS–W0057–00	29 – 4
	29 – 13
5KS–W216R–01–P5	20 – 13
5KS–W216R–02–P6	20 – 13

PART NO.	REF. NO.
3D8–W2587–10	33 – 1
5EL–Y1757–10	16 – 1
5KS–Y2151–2A–P5	20 – 1
4VR–Y2343–70	24 – 11
5EL–Y2410–A2–X3	26 – 1
5EL–Y2410–A2–X6	26 – 1
5EL–Y2410–V2–W7	26 – 1
5EL–Y2410–V2–W8	26 – 1
90101–10303	5 – 14
90101–10659	22 – 25
90101–12673	22 – 18
90105–06154	5 – 9
	6 – 6
90105–06446	26 – 59
90105–08010	16 – 29
90105–082A5	34 – 52
	34 – 58
	42 – 21
90105–10003	19 – 18
90105–10004	19 – 4
90105–10009	19 – 3
90105–10010	31 – 14
90105–10012	34 – 17
90105–10013	19 – 19
90105–100A4	19 – 17
90105–10157	34 – 25
90105–101A9	22 – 7
90105–10299	19 – 20
90105–102A3	34 – 36
	34 – 46
90105–10444	19 – 23
90105–10638	29 – 21
	31 – 13
90105–10727	22 – 14
90105–10781	19 – 12
90109–06667	7 – 7
90109–083G4	29 – 2
	31 – 2
90109–10554	22 – 33
90110–05201	26 – 35
90110–06003	12 – 18
90110–06006	12 – 31
90110–06074	41 – 12
90110–06111	12 – 34
90110–06254	21 – 28
90110–10182	19 – 10
90116–08360	23 – 3
90116–10344	1 – 9

PART NO.	REF. NO.
90116–10593	23 – 2
90116–12469	1 – 8
90119–06096	21 – 11
	21 – 37
90119–06226	21 – 12
90119–06236	19 – 32
90123–08046	41 – 5
90149–06011	26 – 17
90149–06131	41 – 15
90149–06298	2 – 14
90149–06302	21 – 26
	21 – 48
90149–08002	43 – 15
90150–05040	26 – 60
90151–05027	17 – 6
90151–06018	19 – 38
90151–06041	17 – 13
90157–05079	43 – 22
90157–05095	34 – 34
	34 – 44
90170–06010	41 – 16
90170–06228	18 – 23
90170–08173	4 – 11
90170–10011	30 – 11
90170–20257	14 – 36
90170–20274	14 – 5
90170–22187	21 – 21
90176–08002	27 – 18
90176–10075	1 – 12
	10 – 30
	23 – 41
90176–12052	32 – 4
90176–22081	24 – 9
90179–05009	26 – 46
90179–08148	41 – 6
90179–09379	3 – 11
90179–10377	19 – 11
	19 – 24
90179–12325	1 – 11
90179–12326	1 – 10
90179–12657	19 – 15
90179–16013	16 – 26
90179–16448	3 – 15
90179–25033	24 – 7
90179–44328	16 – 3
90179–88336	16 – 10
90183–05061	26 – 37
90183–06053	21 – 13

PART NO.	REF. NO.
90183–06053	21 – 38
	43 – 4
90185–08097	10 – 6
90185–14070	23 – 16
90201–05036	38 – 17
90201–06043	37 – 38
90201–06057	2 – 17
90201–06062	21 – 43
90201–060A3	39 – 17
90201–060S9	26 – 8
90201–065G8	40 – 12
90201–06727	43 – 2
90201–08016	9 – 42
90201–08042	27 – 17
90201–08083	34 – 12
90201–10140	31 – 15
90201–101A4	1 – 13
90201–101J1	19 – 25
	22 – 26
90201–10591	5 – 13
90201–112U0	22 – 8
90201–12166	18 – 10
90201–12588	18 – 7
	18 – 9
90201–12688	18 – 16
90201–126A7	22 – 19
90201–14220	24 – 14
90201–14632	23 – 15
90201–151A7	14 – 20
90201–16028	16 – 25
90201–160T2	30 – 17
90201–165H4	3 – 14
90201–20276	15 – 7
90201–210U0	34 – 51
	34 – 57
90201–220T0	24 – 10
90201–243U9	22 – 6
90201–255A6	16 – 13
90201–266L1	23 – 34
90201–72008	13 – 8
90202–05180	26 – 34
90202–05187	43 – 5
90202–05191	10 – 11
90202–05193	26 – 18
90202–24190	24 – 4
90202–26142	24 – 3
90206–12074	18 – 18
90209–06205	5 – 8

PART NO.	REF. NO.
90209–21332	15 – 3
90209–28331	15 – 14
	15 – 18
90214–20022	14 – 3
90215–20170	14 – 35
90215–20182	14 – 4
90240–08124	34 – 11
90267–40180	21 – 32
90269–07077	20 – 26
	21 – 3
90280–05048	3 – 13
90282–07042	14 – 2
90331–14001	19 – 16
90338–08163	24 – 18
90338–08174	8 – 30
90338–08226	42 – 5
90338–16148	19 – 34
90340–14004	23 – 29
90340–14132	6 – 19
	23 – 26
90340–14153	12 – 4
90340–32140	12 – 2
90380–25125	5 – 15
90387–06043	2 – 16
90387–0610J	39 – 18
90387–064E8	11 – 5
90387–065J6	8 – 43
90387–066Y6	21 – 42
90387–07038	40 – 10
90387–087A5	2 – 2
90387–1003G	34 – 18
90387–100T8	22 – 13
90387–124F4	18 – 8
90387–126T1	22 – 17
90387–127W0	22 – 23
90387–172A5	23 – 43
90387–173M5	28 – 4
	30 – 2
90387–173R6	28 – 8
90387–177Y4	30 – 19
90387–251E1	16 – 27
90401–10020	33 – 11
	35 – 10
90401–10102	6 – 17
90401–16001	6 – 15
90401–16002	1 – 30
90413–07007	8 – 16
90430–06014	11 – 13
90430–10005	33 – 12
	35 – 11
90430–10148	42 – 2
90430–15169	6 – 18
90430–17168	1 – 31
	6 – 16
90445–11056	26 – 51
90445–16641	34 – 23
90450–63096	8 – 48
90450–72003	8 – 47
90461–06087	9 – 39
90461–10127	35 – 17
90461–15139	26 – 57
90462–10003	12 – 35
90462–10247	12 – 36
90464–06214	32 – 19
90464–07003	32 – 17
90464–12089	21 – 30
90464–15192	32 – 20
	43 – 28
90464–16021	20 – 27
90464–18246	32 – 3
90464–20191	43 – 26
90464–25002	37 – 43
90464–25217	43 – 27
90465–10029	1 – 26
90467–08017	26 – 64
90467–08075	26 – 61
90467–08092	10 – 22
90467–09103	26 – 62
90467–10039	8 – 4
90467–10041	26 – 63
90467–10135	8 – 17
90467–11028	26 – 32
90467–11106	8 – 29
90467–11175	8 – 13
90467–12053	26 – 31
90467–14015	8 – 39
	8 – 42
90467–14057	35 – 26
90468–05113	6 – 22
90468–08104	10 – 24
90468–15139	32 – 18
90480–01558	21 – 18
	21 – 49
90480–10289	21 – 41
90480–10627	2 – 13
90480–12314	8 – 40
90480–12320	21 – 25
90480–12550	21 – 19
90480–13018	2 – 15
90480–13398	8 – 50
90480–15061	20 – 24
90480–24186	21 – 22
90501–10312	41 – 17
90501–16491	23 – 37
90501–21133	5 – 3
90501–44455	4 – 4
90501–70762	16 – 6
90506–08227	18 – 2
90506–10069	14 – 15
90506–23490	34 – 20
90506–29507	34 – 21
90508–18023	34 – 3
90508–32012	18 – 6
90508–32535	18 – 4
91314–06016	1 – 27
	5 – 26
	12 – 26
91314–06020	7 – 10
91314–06025	2 – 8
	5 – 23
	21 – 36
	33 – 8
91314–06030	11 – 12
	12 – 16
	12 – 22
91314–06035	1 – 17
	1 – 21
	12 – 15
	12 – 30
91314–06040	2 – 3
	7 – 8
	12 – 32
91314–06045	12 – 17
91314–06050	7 – 9
91314–06055	12 – 19
	12 – 33
91314–06060	12 – 29
91314–06065	12 – 20
91314–06100	2 – 4
91314–08016	37 – 16
91314–08025	24 – 17
	25 – 41
91314–08030	24 – 12
91314–08035	10 – 7
91314–08040	25 – 39
91314–08050	1 – 14
91317–05012	36 – 4
91317–06010	6 – 8
	6 – 12
91317–06012	12 – 12
	42 – 14
91317–06016	13 – 7
	42 – 18
91317–06020	8 – 6
	8 – 51
	21 – 51
91317–06030	11 – 11
	36 – 3
91317–06040	6 – 4
91317–06055	11 – 10
91317–06080	11 – 9
91317–10020	19 – 8
91317–10030	19 – 9
91317–10060	11 – 8
91317–10070	11 – 7
91317–10100	11 – 6
91401–20012	34 – 13
	34 – 50
	34 – 56
91402–20012	34 – 5
91492–10008	9 – 72
91701–06032	34 – 49
	34 – 55
91702–06022	34 – 4
91817–30011	1 – 5
92014–05012	8 – 11
	8 – 25
92014–06020	12 – 38
92014–08012	27 – 7
92014–08016	35 – 8
92014–08025	10 – 15
	20 – 21
92014–08040	24 – 21
92017–06012	21 – 46
	26 – 9
92017–06016	27 – 15
92017–06025	39 – 16
92017–10020	10 – 16
92902–04100	39 – 7
92902–04600	9 – 46
92902–05100	9 – 52
92902–06600	9 – 78
92906–06100	9 – 73
92907–04100	9 – 30
	38 – 9
92907–04600	41 – 20
92907–05200	34 – 35
	34 – 45
92907–05600	26 – 39
	38 – 14
	42 – 8
	42 – 11
92907–06100	27 – 6
	27 – 12
92907–06600	8 – 52
92907–08200	14 – 13
92907–08600	1 – 15
92907–08700	23 – 23
92990–10600	23 – 42
93101–14102	12 – 24
93101–30084	23 – 5
93101–35099	16 – 20
93101–38098	23 – 13
93102–12106	12 – 6
93102–25044	30 – 5
93102–28022	28 – 3
93102–70167	23 – 25
93104–14059	14 – 16
93104–20068	15 – 10
93108–43014	23 – 33
93109–17071	22 – 22
93210–07135	6 – 3
	6 – 11
	7 – 6
	11 – 3
	11 – 4
93210–10096	7 – 12
93210–14369	12 – 5
93210–15620	35 – 4
93210–16001	16 – 24
93210–27370	12 – 10
93210–32172	12 – 3
93210–44545	8 – 5
93210–48364	14 – 11
93210–48530	30 – 8
93210–52449	16 – 19
93210–54452	7 – 3
93210–56459	7 – 2
93210–57428	30 – 12
93210–59531	30 – 9
93210–60426	23 – 12
93210–62446	1 – 25
93210–71360	16 – 16
93210–92448	1 – 20
93211–44348	23 – 21
93306–20348	30 – 3
93306–20401	15 – 23
93306–20548	16 – 17
93306–20550	15 – 24
93306–20901	16 – 2
93306–30317	28 – 2
	30 – 4
93306–30424	15 – 11
93306–30525	15 – 9
93306–30533	23 – 10
93306–30808	3 – 2
	3 – 4
93306–90602	17 – 2
93306–91201	15 – 27
93310–5720G	13 – 3
93311–21044	23 – 39
93311–43729	23 – 6
93311–44051	16 – 12
93316–01201	15 – 26
93316–01403	23 – 19
93317–21236	12 – 7
93317–22021	16 – 11
93317–31771	22 – 21
93317–41510	23 – 7
93317–41761	22 – 16
93317–42060	22 – 12
93320–32403	22 – 3
93340–21505	14 – 19
93399–99931	24 – 2
93399–99932	24 – 1
93410–22039	23 – 36
93410–26067	23 – 35
93440–14086	1 – 2
93440–20088	23 – 40
93440–31172	15 – 15
	15 – 19
93440–68180	13 – 9
93450–24028	3 – 8
93604–12037	5 – 18
93604–16092	17 – 4
93604–20156	17 – 5
93605–10090	5 – 4
93606–07082	14 – 7

PART NO.	REF. NO.
93608–50158	18 – 11
93900–00025	30 – 14
93900–00030	28 – 6
94113–16008	28 – 5
94113–16009	28 – 5
94117–15011	30 – 13
94117–15012	30 – 13
94580–25066	6 – 9
94591–49098	5 – 16
94701–00218	1 – 32
94701–00220	1 – 32
95024–06010	24 – 24
95024–06012	37 – 37
95024–06030	37 – 13
	37 – 32
95027–06008	43 – 8
95027–06010	35 – 16
	35 – 18
	37 – 42
95027–06016	35 – 24
95027–08035	35 – 6
95302–05700	9 – 53
95304–06700	18 – 24
95307–05600	38 – 18
95307–06600	40 – 11
95307–08700	14 – 14
	34 – 14
95317–08600	23 – 22
95382–06700	9 – 74
95604–06100	41 – 8
95604–16200	30 – 18
95607–06100	41 – 14
95607–08200	22 – 29
95607–10200	19 – 5
	19 – 13
	22 – 15
	22 – 34
	34 – 19
95617–08625	1 – 4
95617–10100	22 – 27
95617–12100	22 – 20
95627–08330	22 – 30
95704–06500	37 – 14
	37 – 33
95707–05500	20 – 12
	37 – 45
95707–08500	24 – 22
95807–06010	20 – 10

PART NO.	REF. NO.
95807–06010	21 – 39
95807–06030	33 – 14
95807–08012	26 – 45
95814–06025	13 – 19
95817–06010	8 – 54
95817–06020	8 – 44
95817–08020	19 – 35
	20 – 5
95817–08045	19 – 36
95817–10016	19 – 22
	19 – 27
95817–10025	23 – 24
97004–06020	34 – 8
	41 – 7
97007–05020	42 – 7
	42 – 10
97007–06012	27 – 5
	27 – 11
97007–06025	43 – 3
97017–08020	1 – 29
97024–06020	18 – 21
97027–06025	14 – 32
97707–40012	38 – 10
97707–40516	40 – 6
97707–50014	21 – 16
97707–50016	26 – 58
97707–50116	8 – 21
97707–50125	8 – 36
97707–60016	21 – 35
	42 – 4
97780–40525	40 – 7
97801–03008	26 – 15
98502–04008	39 – 6
98502–05016	9 – 15
98507–04006	9 – 38
98507–04008	9 – 27
98507–04010	9 – 34
	9 – 34
	9 – 77
	38 – 8
98507–04012	9 – 24
98507–04014	9 – 29
98507–04016	41 – 19
98507–05008	32 – 11
98507–05012	26 – 38
	38 – 13
98507–05025	41 – 22
	41 – 24

PART NO.	REF. NO.
98704–05012	39 – 15
98707–03020	41 – 10
98904–06014	10 – 12
99001–06600	34 – 32
	34 – 42
99001–10600	18 – 5
99009–12400	18 – 17
99009–20400	15 – 8
99009–25400	15 – 4
99530–08016	6 – 2
99530–10114	12 – 14
99530–10120	12 – 28
99530–14016	11 – 2

PART NO.	REF. NO.

PART NO.	REF. NO.

PART NO.	REF. NO.