YAMAHA

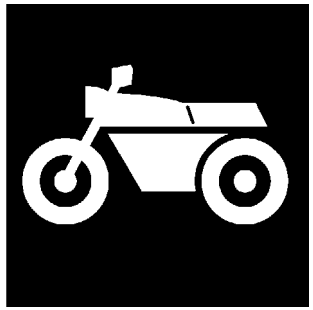

PARTS CATALOGUE
CATALOGO DE REPUESTOS

XTZ125E (41B4) C SOUTH AMERICA

1J41B-210S1

( )

YAMAHA
GENUINE
Parts & Accessories

XTZ125E
PARTS CATALOGUE
©2010 by Yamaha Motor do Brasil Ltda.
1st edition, March 2010
All rights reserved.
Any reprinting or unauthorized use
without the written permission of
Yamaha Motor do Brasil Ltda.
is expressly prohibited.
Printed in Brazil.

XTZ125E
CATALOGO DE REPUESTOS
©2010 por Yamaha Motor do Brasil Ltda.
1ª edición, marzo 2010
Todos los derechos reservados.
Toda reproducción o uso no autorizado
sin el consentimiento escrito de
Yamaha Motor do Brasil Ltda.
quedan expresamente prohibidos
Impreso en Brasil.

FOREWORD

This Parts Catalogue is related to the parts for the model(s) on the cover page. When you are ordering replacement parts, please refer to this Parts Catalogue and quote both part numbers and part names correctly.

1. Modifications or additions which have been made after the issue of the Parts Catalogue will be announced in the Parts News.
   It is advisable that you make the necessary corrections to the Parts Catalogue according to the Parts News.

2. Abbreviations
   The following abbreviations are used in this Parts Catalogue.

   “UR” Use specified parts number.
   “UN” Use as many as needed.
   “AP” Alternate Parts
   “LM” Locally Made (Parts need to be ordered locally)
   “F#” Frame No. (Applicable machine No.)
   “O/S” Over Size

3. The number of components for assembly
   - Parts, which are to be supplied in an assembly, are listed with a dot (.) in front of the part name as shown below.
   - The numeral appearing to the right of each component part indicates the quantity of parts for each assembly unit.

PART NO.	DESCRIPTION	Q’TY	REMARKS
2F5–83310–60	FRONT FLASHER LIGHT ASSY	2	
115–83311–60	.BULB (6V–18W)	1	

4. Applicable colours of graphics are represented in the “REMARKS” as shown below.

PART NO.	DESCRIPTION	Q’TY	REMARKS
2N4–24110–00–X5	FUEL TANK COMP.	2	MXR
3J1–24240–10	.GRAPHIC, FUEL TANK	1	FOR MXR

5. Note that the illustrations for reference in finding parts numbers are not to be used for assembling. When assembling, please use the applicable service manual.

6. The asterisk (*) before a reference number indicates modified items after the first edition.

PROLOGO

Este catálogo de repuestos corresponde a las piezas para el o los modelos que figuran en la página de portada. Al formular el pedido de repuestos, se ruega citar este catálogo y especificar correctamente el número y el nombre de las piezas.

1. Las modificaciones y agregados que se hayan realizado después de la edición de este Catálogo de Repuestos, serán anunciados en las Informaciones de Recambios.
   Es recomendable que se hagan las correcciones necesarias en el Catálogo de Repuestos de acuerdo con las Informaciones de Recambios.

2. Abreviaciones
   En este. Catálogo de Repuestos se emplean las siguientes abreviaciones.

   "UR" Usar el número de partes especificado
   "UN" Usar la cantidad necesaria
   "AP" Piezas sustitutivas
   "LM" Fabricación local (Hay que pedir los repuestos en las cercanías)
   "F#" Nº de bastidor (Nº aplicable a la máquina)
   "O/S" Sobredimensionado

3. La cantidad de componentes para el montaje
   - Los componentes, suministrados como conjunto, se describen con un punto (.) que precede al nombre del parte como se indica a continuación.
   - La numeración que aparece a la derecha de cada descripción indica la cantidad de partes por cada unidad de conjunto.

CODIGO Nº	DESCRIPCION	CANT.	OBSERVACIONES
2F5–83310–60	ENSAMBLAJE DE LA LUZ	2	
115–83311–60	.BOMBILLA (6V–18W)	1	

4. Los colores de los componentes se indican como sigue en la columna de "OBSERVACIONES".

CODIGO Nº	DESCRIPCION	CANT.	OBSERVACIONES
2N4–24110–00–X5	COMP. DEL TANQUE	2	MXR
3J1–24240–10	.GRAFICO, DEL TANQUE	1	PARA MXR

5. Debe tenerse en cuenta que las ilustraciones sirven como guia para la búsqueda de los números de partes y no deben usarse para el montaje. Durante el montaje, se recomienda usar el manual de taller correspondiente.

6. EL asterisco (*) antes del número de referencia indica los elementos modificados después de la primera edición.

7. Applicable Serial No.

Frame Serial No.

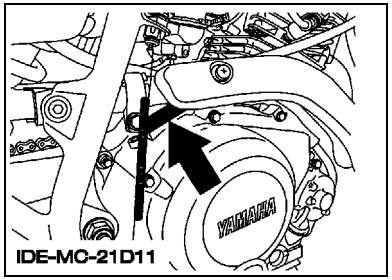

Engine Serial No.

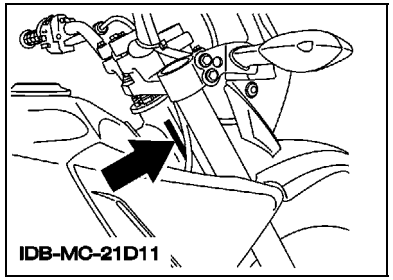

8. Applicable Colour Code (The (*) mark shows Model colour.)

Abbreviation	Colour Name	Colour Code
DPBSE(*)	DEEP PURPLISH BLUE SOLID E	0583
HTR(*)	HEAT RED	00EY
SL	SILVER	0035
YB(*)	YAMAHA BLACK	0033

9. Applicable Starting Serial No.

Frame Serial No.

Serial No.	Name Of Q'ty Column	Model Code
9C6KE1154A0007201	41B4	41B4

Engine Serial No.

Serial No.	Name Of Q'ty Column	Model Code
E3C3E-007201	41B4	41B4

7. Números de serie

Nº de Serie del bastidor

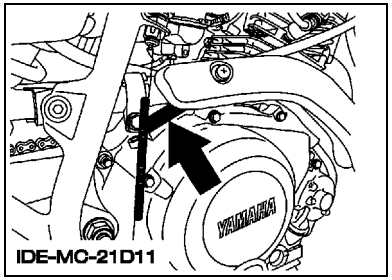

Nº de Serie del motor

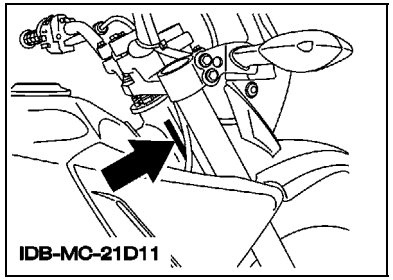

8. Códigos de color aplicables (El símbolo (*) muestra el color de modelo.)

Abreviatura	Nombre de color	Código de color
DPBSE(*)	DEEP PURPLISH BLUE SOLID E	0583
HTR(*)	HEAT RED	00EY
SL	SILVER	0035
YB(*)	YAMAHA BLACK	0033

9. Nº de serie inicial aplicable

Nº de Serie del bastidor

Nº de serie	Nombre de la columna de cantidades	Código de Modelo
9C6KE1154A0007201	41B4	41B4

Nº de Serie del motor

Nº de serie	Nombre de la columna de cantidades	Código de Modelo
E3C3E-007201	41B4	41B4

CONTENTS

ENGINE

CYLINDER 1
CRANKSHAFT & PISTON 2
VALVE 3
CAMSHAFT & CHAIN 4
OIL PUMP 5
INTAKE 6
CARBURETOR 8
EXHAUST 10
CRANKCASE 11
CRANKCASE COVER 1 12
STARTER 13
STARTER CLUTCH 14
CLUTCH 15
TRANSMISSION 16
SHIFT CAM & FORK 18
SHIFT SHAFT 19

CHASSIS

FRAME 20
FENDER 21
SIDE COVER 22
REAR ARM & SUSPENSION 23
STEERING 24
FRONT FORK 25
FUEL TANK 27
SEAT 29
FRONT WHEEL 30
FRONT BRAKE CALIPER 31
REAR WHEEL 32
STEERING HANDLE & CABLE 34
FRONT MASTER CYLINDER 35
STAND & FOOTREST 36
GENERATOR 38
STARTING MOTOR 39
FLASHER LIGHT 40
METER 41
HEADLIGHT 42
TAILLIGHT 43
HANDLE SWITCH & LEVER 44
ELECTRICAL 1 45
ELECTRICAL 2 46
GRAPHIC & EMBLEM 1 47
GRAPHIC & EMBLEM 2 48

INDEX

NUMERICAL INDEX 49

CONTENIDO

MOTOR

CILINDRO 1
CIGUENAL & PISTON 2
VALVULA 3
ARBOL DE LEVAS & CADENA 4
BOMBA DE ACEITE 5
ADMISION 6
CARBURADOR 8
DESCARGA 10
CARTER 11
CUBIERTA DE CARTER 1 12
ARRANQUE 13
EMBRAGUE DEL ARRANQUE 14
EMBRAGUE 15
TRANSMISION 16
LEVA DE CAMBIO & HORQUILLA 18
EJE DE CAMBIO & PEDAL 19

SHASIS

CUADRO 20
GUARDABARRO 21
CUBIERTA LATERAL 22
BRAZO TRASERO & SUSPENSION 23
DIRECCION 24
HORQUILLA DELANTERA 25
DEPOSITO DE COMBUSTIBLE 27
ASIENTO 29
RUEDA DELANTERA 30
CALIBRE FRENO DELANTERA 31
RUEDA TRASERA 32
MANILLAR & CABLE 34
CILINDRO MAESTRO DELANTERO 35
SOPORTE & APOYAPIE 36
GENERADOR 38
MOTOR DE ARRANQUE 39
LUZ DE DESTELLADOR 40
MEDIDOR 41
FARO DELANTERO 42
LUZ DE COLA 43
INTERRUPTOR DE MANILLAR&PALANC 44
EQUIPO ELECTRICO 1 45
EQUIPO ELECTRICO 2 46
CALCOMANIA & EMBLEMA 1 47
CALCOMANIA & EMBLEMA 2 48

INDICE

INDICE NUMERICO 49

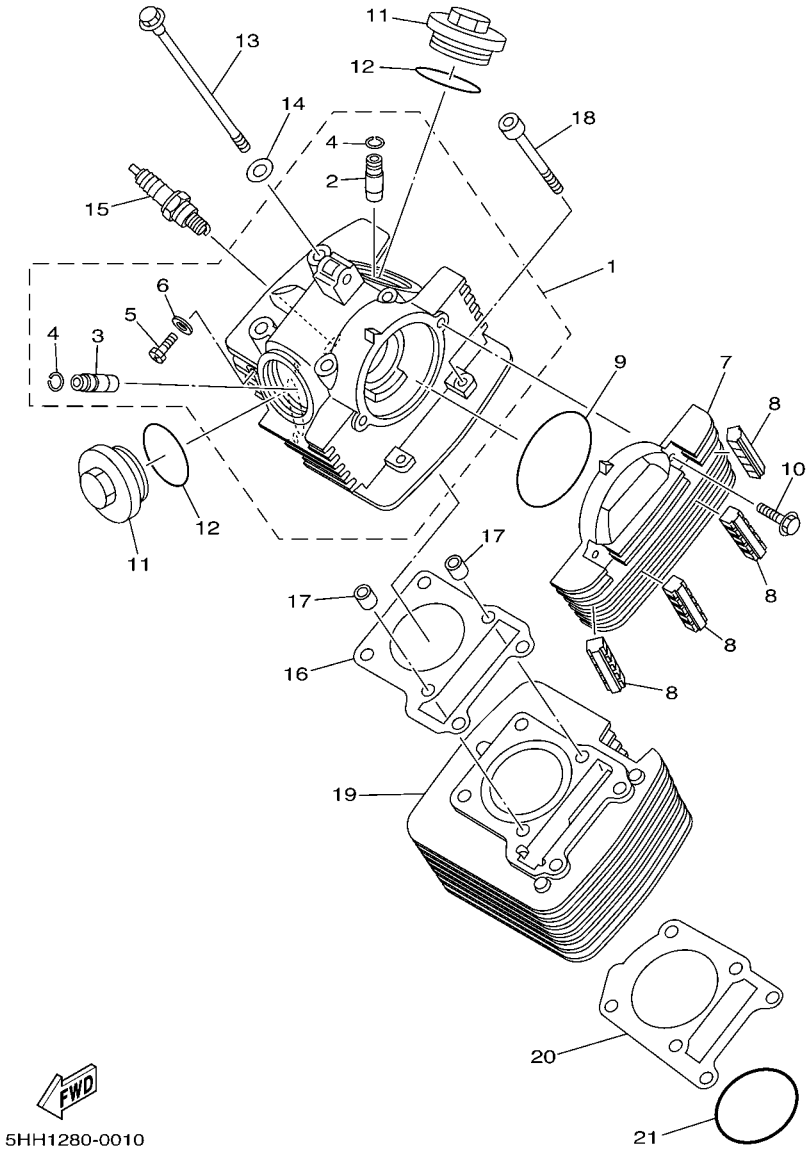

FIG. 1 CYLINDER CILINDRO

REF. NO.	PART NO. CODIGO Nº	DESCRIPTION DESCRIPCION	41B4					REMARKS OBSERVACIONES
1	5RR–E1111–10	HEAD, CYLINDER 1 CULATA CILINDRO 1	1					
2	2UJ–11133–10	.GUIDE, VALVE 1 .GUIA DE VALVULA 1	1					
3	22F–11134–10	.GUIDE, VALVE 2 .GUIA DE VALVULA 2	1					
4	93440–10109	.CIRCLIP .SEGURO	2					
5	90153–06803	.SCREW, HEXAGON .TORNILLO HEXAGONAL	1					
6	90430–06817	.GASKET .JUNTA	1					
7	5VL–E1185–10	COVER, CYLINDER HEAD SIDE 3 CUBIERTA CULATA CIL.LAT.3	1					
8	5HH–E1161–00	ABSORBER 1 AMORTIGUADOR 1	4					
9	93210–79200	O-RING ANILLO O	1					
10	9502M–06020	BOLT, FLANGE PERNO, DE BRIDA	2					
11	5HH–E1186–00	COVER, CYLINDER HEAD SIDE 2 CUBIERTA CULATA CIL.LAT.2	2					
12	93210–44800	O-RING ANILLO O	2					
13	90105–08724	BOLT, FLANGE TORNILLO	4					
14	90201–08609	WASHER, PLATE ARANDELA PLANA	4					
15	94700–00834	PLUG, SPARK (NGK CR7HSA) BUJIA (NGK CR7HSA)	1					
16	5HH–E1181–00	GASKET, CYLINDER HEAD 1 JUNTA, DE CULATA 1	1					
17	99530–10114	PIN, DOWEL PASADOR, DE ESPIGA	2					
18	90110–06W02	BOLT, HEXAGON SOCKET HEAD TORNILLO ALLEN	2					
19	5HH–E1310–10–35	CYLINDER CILINDRO	1					SL SL
20	5HH–E1351–00	GASKET, CYLINDER JUNTA, DE CILINDRO	1					
21	93210–57800	O-RING ANILLO O	1					

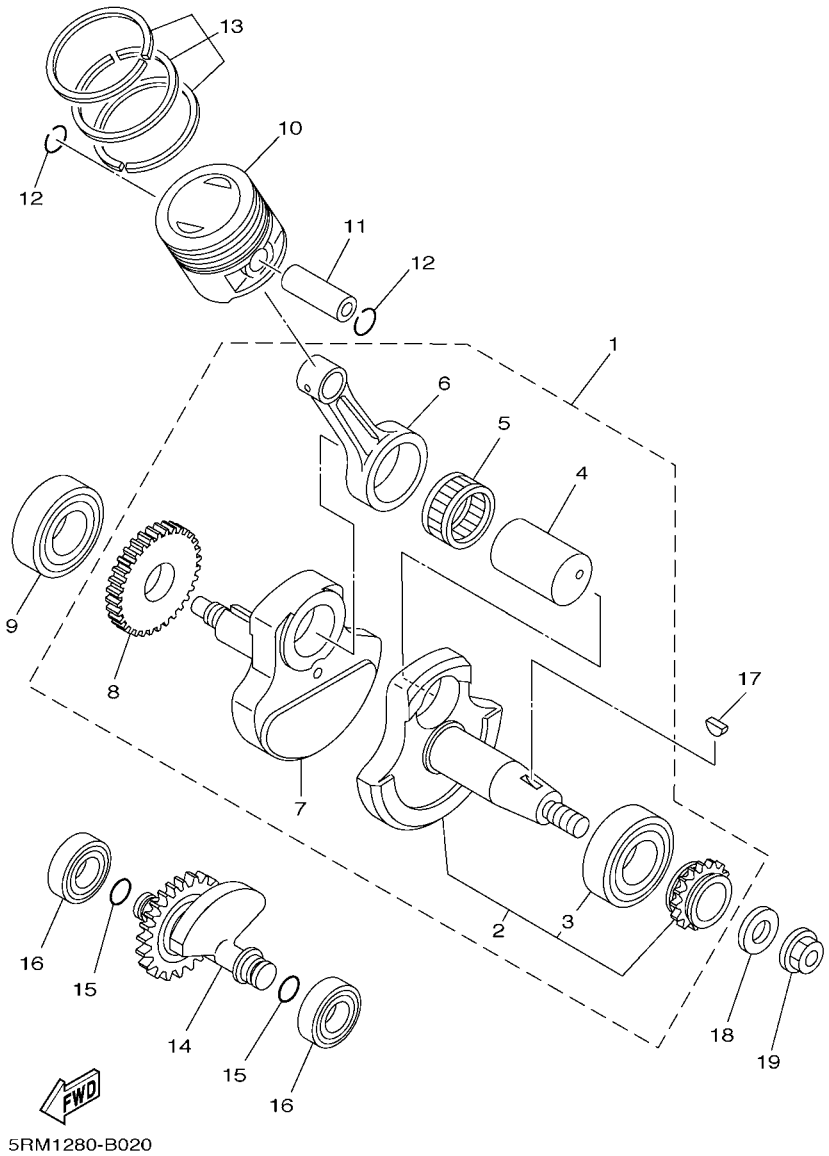

FIG. 2 CRANKSHAFT & PISTON CIGUENAL & PISTON

REF. NO.	PART NO. CODIGO Nº	DESCRIPTION DESCRIPCION	41B4					REMARKS OBSERVACIONES
1	5RM–E1400–10	CRANKSHAFT ASSY CIGUENAL COMPLETO	1					
2	5RM–WE141–20	.CRANK 1 .MANIVELA SEMI-ARMADA 1	1					
3	93306–205A0	..BEARING ..COJINETE	1					
4	4LS–11681–01	.PIN, CRANK 1 .PASADOR MANIVELA 1	1					
5	93310–6290C	.BEARING .COJINETE DE RODILLOS	1					
6	4LS–11651–02	.ROD, CONNECTING .BIELA	1					
7	5HH–E1422–10	.CRANK 2 .MANIVELA 2	1					
8	5HH–E1536–00	.GEAR, DRIVE .ENGRANAJE TRACCION	1					
9	93306–205A0	BEARING COJINETE	1					
10	5HH–E1631–00–C0	PISTON (STD) PISTON (NORMA)	1					
	5HH–E1635–09	PISTON (0.25MM O/S) PISTON (0.25MM O/S)	1					AP AP
	5HH–E1636–09	PISTON (0.50MM O/S) PISTON (0.50MM O/S)	1					AP AP
	5HH–E1637–09	PISTON (0.75MM O/S) PISTON (0.75MM O/S)	1					AP AP
	4LS–11638–01	PISTON (1.00MM O/S) PISTON (1.00MM O/S)	1					AP AP
11	5HH–E1633–00	PIN, PISTON PASADOR, PISTON	1					
12	93450–16068	CIRCLIP SEGURO	2					
13	5RM–E1603–00	PISTON RING SET (STD) JUEGO DE ANILLOS (NORMA)	1					
	5RM–E1604–00	PISTON RING SET (0.25MM O/S) JUEGO DE ANILLOS (0.25MM O/S)	1					AP AP
	5RM–E1605–00	PISTON RING SET (0.50MM O/S) JUEGO DE ANILLOS (0.50MM O/S)	1					AP AP
	5RM–E1606–00	PISTON RING SET (0.75MM O/S) JUEGO DE ANILLOS (0.75MM O/S)	1					AP AP
	5RM–11607–00	PISTON RING SET (1.00MM O/S) JUEGO DE ANILLOS (1.00MM O/S)	1					AP AP
14	5HH–E1500–02	BALANCER ASSY COMPENSADOR COMPLETA	1					
15	93210–11001	O-RING ANILLO O	2					
16	93306–20221	BEARING COJINETE	2					
17	90280–03045	KEY, WOODRUFF CUNA WOODRUFF	1					
18	90201–122H1	WASHER, PLATE ARANDELA PLANA	1					
19	9570M–12500	NUT, FLANGE TUERCA DE BRIDA	1					

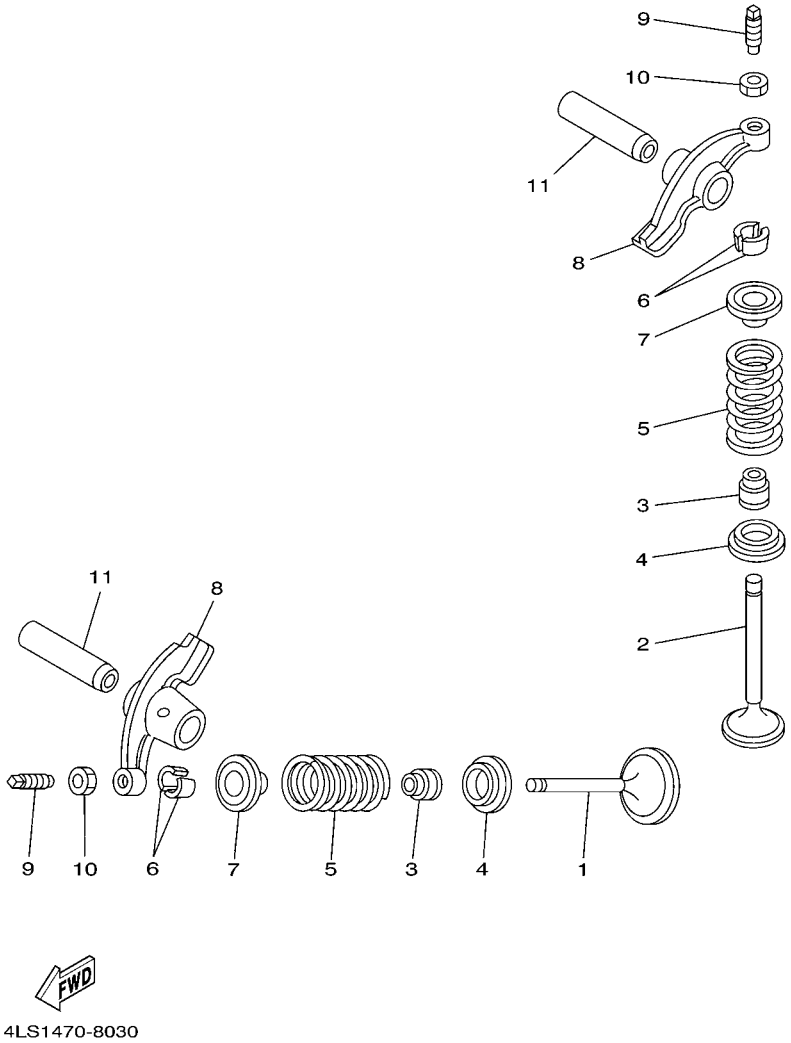

FIG. 3 VALVE VALVULA

REF. NO.	PART NO. CODIGO Nº	DESCRIPTION DESCRIPCION	41B4					REMARKS OBSERVACIONES
1	5HH–E2111–00	VALVE, INTAKE VALVULA DE ADMISION	1					
2	5HH–E2121–00	VALVE, EXHAUST VALVULA DE ESCAPE	1					
3	2HX–12119–00	SEAL, VALVE STEM SELLO DE ACEITE VALVULA	2					
4	22F–12116–00	SEAT, VALVE SPRING ASIENTO RESORTE DE VALVULA	2					
5	5HH–12113–00	SPRING, VALVE INNER RESORTE VALVULA INTERNA	2					
6	22F–12118–01	COTTER, VALVE SEGURO DE VALVULA	4					
7	22F–12117–02	RETAINER, VALVE SPRING RETEN RESORTE DE VALVULA	2					
8	5HH–E2151–00	ARM, VALVE ROCKER BRAZO DE BALANCIN DE VALVULA	2					
9	22F–12159–00	SCREW, VALVE ADJUSTING TORNILLO DE AJUSTE DE VALVULA	2					
10	90170–05302	NUT TUERCA	2					
11	5VL–E2156–00	SHAFT, ROCKER 2 EJE DE BALANCIN	2					

FIG. 4 CAMSHAFT & CHAIN — ARBOL DE LEVAS & CADENA

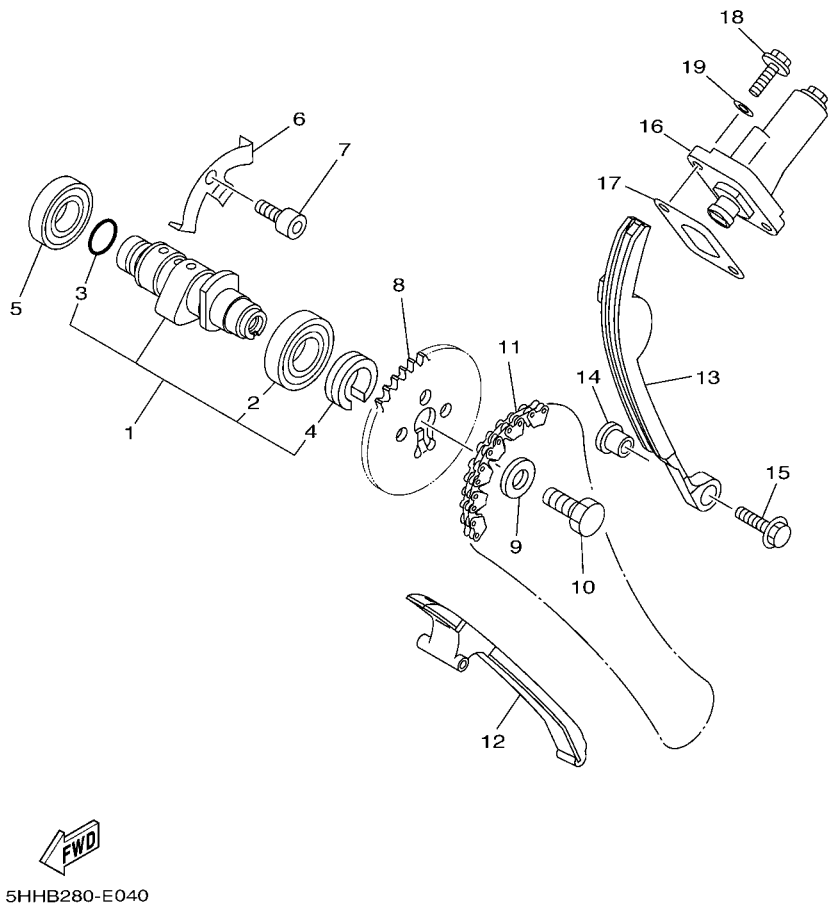

REF. NO.	PART NO. CODIGO Nº	DESCRIPTION DESCRIPCION	41B4					REMARKS OBSERVACIONES
1	5HH–E2170–20	CAMSHAFT ASSY 1 ARBOL DE LEVAS COMPLETO 1	1					
2	93306–003X0	.BEARING .COJINETE	1					
3	93210–11453	.O-RING .ANILLO O	1					
4	90387–16804	.COLLAR .ESPACIADOR	1					
5	93306–002Y5	BEARING COJINETE	1					
6	5HH–E111F–00	PLATE PLACA	1					
7	9131M–06012	BOLT PERNO	1					
8	5VL–E2176–10	SPROCKET, CAM CHAIN CATALINA DE CADENA	1					
9	90201–08326	WASHER, PLATE ARANDELA PLANA	1					
10	90101–08W10	BOLT TORNILLO	1					
11	94582–18090	CHAIN (DID SCR-0404 SV) CADENA (DID SCR-0404 SV)	1					
12	5HH–E2231–10	GUIDE, STOPPER 1 TOPE DE GUIA 1	1					
13	5HH–E2241–10	GUIDE, STOPPER 2 TOPE DE GUIA 2	1					
14	5HH–E5598–00	COLLAR COLLAR	1					
15	9580M–06020	BOLT, FLANGE TORNILLO	1					
16	5VL–12210–10	TENSIONER ASSY, CAM CHAIN TENSOR CADENA DE LEVA	1					
17	5HH–E2213–00	GASKET, TENSIONER CASE EMPAQUE DE CAJA TENSOR	1					
18	9502M–06016	BOLT, FLANGE PERNO, DE BRIDA	2					
19	90430–06817	GASKET JUNTA	2					

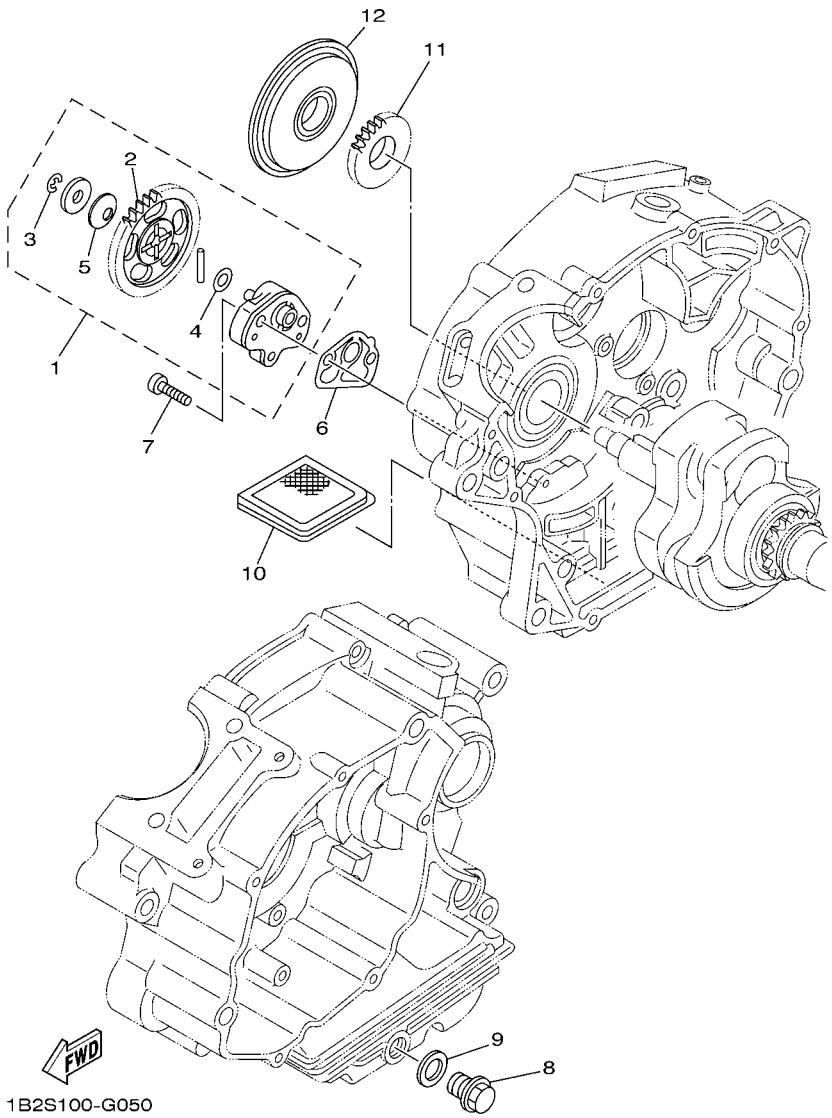

FIG. 5 OIL PUMP — BOMBA DE ACEITE

REF. NO.	PART NO. CODIGO Nº	DESCRIPTION DESCRIPCION	41B4					REMARKS OBSERVACIONES
1	5VL–E3300–01	OIL PUMP ASSY BOMBA DE ACEITE COMPLETA	1					
2	5VL–E3325–00	.GEAR, PUMP DRIVEN .ENGRANAJE IMPULSOR DE BOMBA 1	1					
3	99002–05600	.CLIP .PRESILLA REDONDA	1					
4	90201–07641	.WASHER, PLATE .ARANDELA PLANA	1					
5	90208–07052	.WASHER, CONICAL SPRING .ARANDELA DE RESORTE CONICO	1					
6	5HH–E3329–00	GASKET, PUMP COVER EMPAQUE TAPA DE BOMBA	1					
7	90155–06800	SCREW, FLAT FILLISTER TORNILLO CABEZA PLANA RAN.	2					
8	90340–12097	PLUG, STRAIGHT SCREW TORNILLO, DE DRENAJE	1					
9	90430–12227	GASKET JUNTA	1					
10	5HH–E3411–01	STRAINER, OIL FILTRO DE ACEITE	1					
11	5VL–E3324–00	GEAR, PUMP DRIVE ENGRANAJE TRACC. DE BOMBA	1					
12	5VL–E3451–00	FILTER,ROTARY FILTRE ROTATIVO	1					

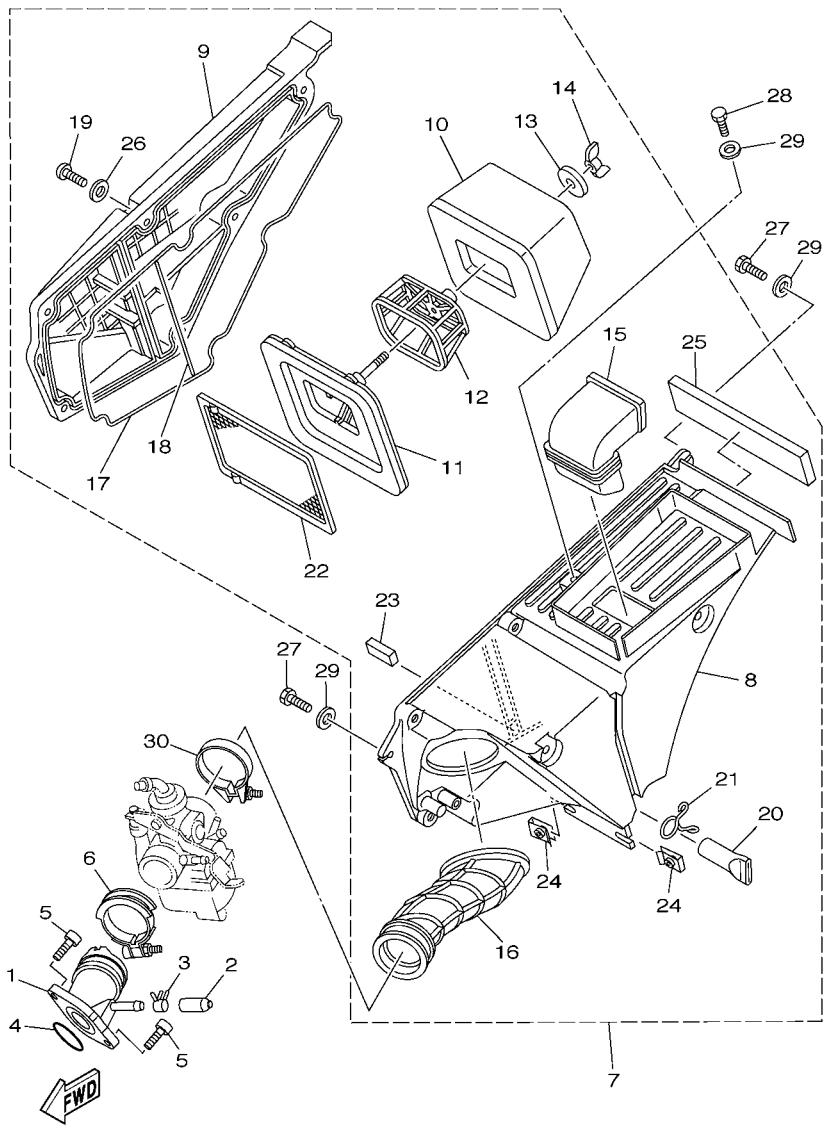

5RM1280-B060

FIG. 6 INTAKE — ADMISION

REF. NO.	PART NO. CODIGO Nº	DESCRIPTION DESCRIPCION	41B4					REMARKS OBSERVACIONES
1	5HH–E3586–00	JOINT, CARBURETOR 1 TOBERA DE CARBURADOR 1	1					
2	5HH–E3569–00	PLUG, BLIND TAPON CIEGO	1					
3	90467–10819	CLIP PRESILLA	1					
4	93210–30800	O-RING ANILLO O	1					
5	9131M–06020	BOLT PERNO	2					
6	90450–44062	HOSE CLAMP ASSY BRIDA, MANGUERA	1					
7	41B–E4410–00	AIR CLEANER ASSY. FILTRO DE AIRE COMPLETO	1					
8	5RM–E4411–00	.CASE, AIR CLEANER 1 .CAJA FILTRO DEL AIRE 1	1					
9	5RM–E4412–00	.CAP, CLEANER CASE 1 .TAPA CAJA DEL FILTRO 1	1					
10	5RM–14451–00	.ELEMENT, AIR CLEANER .ELEMENTO DEL FILTRO DEL AIRE	1					
11	5RM–E4459–00	.HOLDER, GUIDE .SOPORTE DE GUIA	1					
12	5RM–E4458–00	.GUIDE .GUIA	1					
13	90201–06735	.WASHER, PLATE .ARANDELA PLANA	1					
14	90175–06807	.NUT, WING .TUERCA MARIPOSA	1					
15	5RM–E4437–00	.DUCT .CONDUCTO	1					
16	5RM–E4453–00	.JOINT, AIR CLEANER 1 .UNION DEL FILTRO DEL AIRE 1	1					
17	21D–14452–00	.SEAL .SELLO	1					
18	21D–14462–00	.SEAL .SELLO	1					
19	9851M–06020	.SCREW, PAN HEAD .TORNILLO DE CABEZA CON PLANA	6					
20	5HH–E443E–01	.PIPE, DRAIN .TUBO, DRENAJE	1					
21	90467–15012	.CLIP .PRESILLA	1					
22	5RM–E4472–00	.PLATE, ELEMENT .PLACA DE ELEMENTO	1					
23	4VW–E4462–10	.SEAL .SELLO	1					
24	90183–06802	.NUT, SPRING .TUERCA DE RESORTE	2					
25	5RM–E4425–00	.DAMPER 1 .AMORTIGUADOR 1	1					
26	9290M–06600	.WASHER .ARANDELA	6					
27	90101–06W10	BOLT TORNILLO	2					

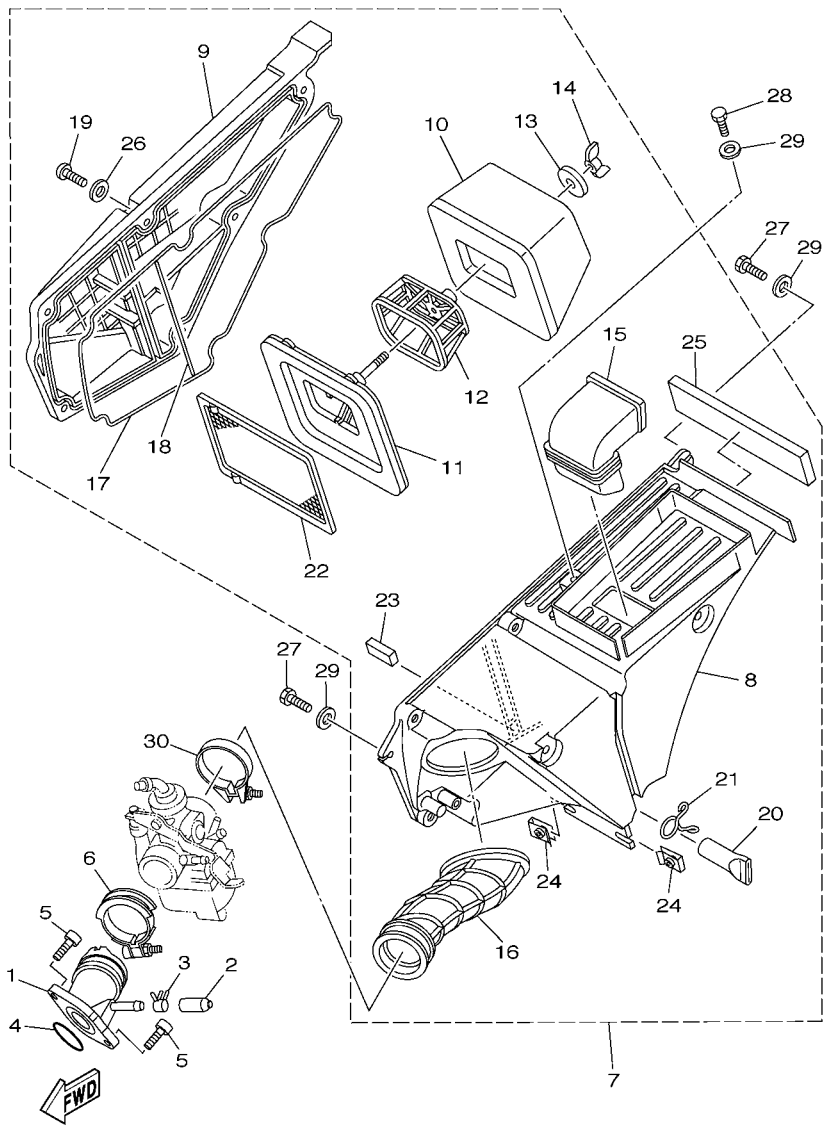

5RM1280-B060

FIG. 6 INTAKE ADMISION

REF. NO.	PART NO. CODIGO Nº	DESCRIPTION DESCRIPCION	41B4					REMARKS OBSERVACIONES
28	90101–06W11	BOLT TORNILLO	1					
29	90201–06804	WASHER, PLATE ARANDELA PLANA	3					
30	90460–46206	CLAMP, HOSE BRIDA, DE UNION	1					

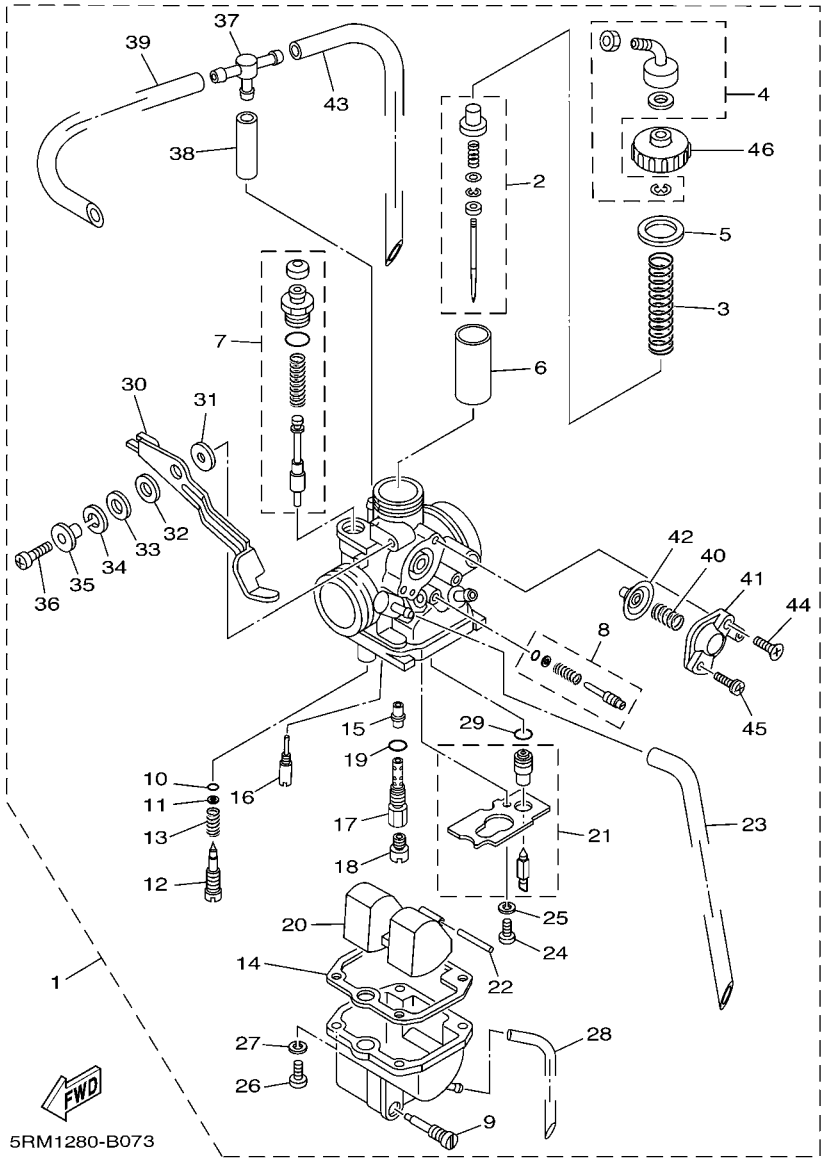

FIG. 7 CARBURETOR CARBURADOR

REF. NO.	PART NO. CODIGO Nº	DESCRIPTION DESCRIPCION	41B4					REMARKS OBSERVACIONES
1	5YM–E4101–01	CARBURETOR ASSY 1 CARBURADOR COMPLETO 1	1					
2	5HP–1490J–00	.NEEDLE SET .CJTO. AGUJA	1					
3	4LS–14131–00	.SPRING, THROTTLE VALVE .RESORTE VALVULA DE ACELERACION	1					
4	5HP–14106–00	.CABLE ADJUST SCREW SET .TORNILLO AJUSTADOR DE CABLE	1					
5	4LS–14126–00	.GASKET .EMPAQUE	1					
6	5HH–14112–25	.VALVE, THROTTLE 1 .VALVULA DE ACELERACION 1	1					
7	5RM–1410A–00	.STARTER SET .JUEGO DE ARRANQUE	1					
8	5HH–14103–00	.THROTTLE SCREW SET .CJTO. TORNILLO DEL RALENTI	1					
9	4LS–14191–00	.PLUG, DRAIN .TORNILLO, DE DRENAJE	1					
10	3H1–14147–00	.O-RING .ANILLO O	1					
11	3H1–14962–00	.WASHER .ARANDELA	1					
12	4LS–14923–20	.SCREW, PILOT .TORNILLO DE AJUSTE	1					
13	5K7–14134–00	.SPRING, AIR ADJUSTING .RESORTE AJUSTE DE VALVULA	1					
14	24W–14184–00	.GASKET, FLOAT CHAMBER .JUNTA, CAMARA DE BOYA	1					
15	5YM–14141–27	.NOZZLE, MAIN .BOQUILLA PRINCIPAL	1					
16	5HP–14142–17	.JET, PILOT (# 17.5) .SURTIDOR DE RALENTI (# 17.5)	1					
17	5HP–14145–00	.SETTER, NEEDLE JET .ESPREA	1					
18	620–1423A–70	.JET, MAIN (#97.5) .INYECTOR,PRINCIPAL (# 97.5)	1					
19	583–14561–00	.O-RING .ANILLO O	1					
20	5HH–14185–00	.FLOAT .BOYA	1					
21	5RM–14107–18	.NEEDLE VALVE SET .VALVULA DE AGUJA	1					
22	127–14186–00	.PIN, FLOAT .PASADOR DE LA BOYA	1					
23	5RM–14197–20	.PIPE .TUBO RESPIRADERO	1					
24	98507–03006	.SCREW, PAN HEAD .TORNILLO DE CABEZA PLANA	1					
25	92907–03100	.WASHER, SPRING .ARANDELA	1					
26	98507–04014	.SCREW, PAN HEAD .TORNILLO DE CABEZA PLANA	4					
27	92907–04100	.WASHER, SPRING .ARANDELA DE RESORTE	4					

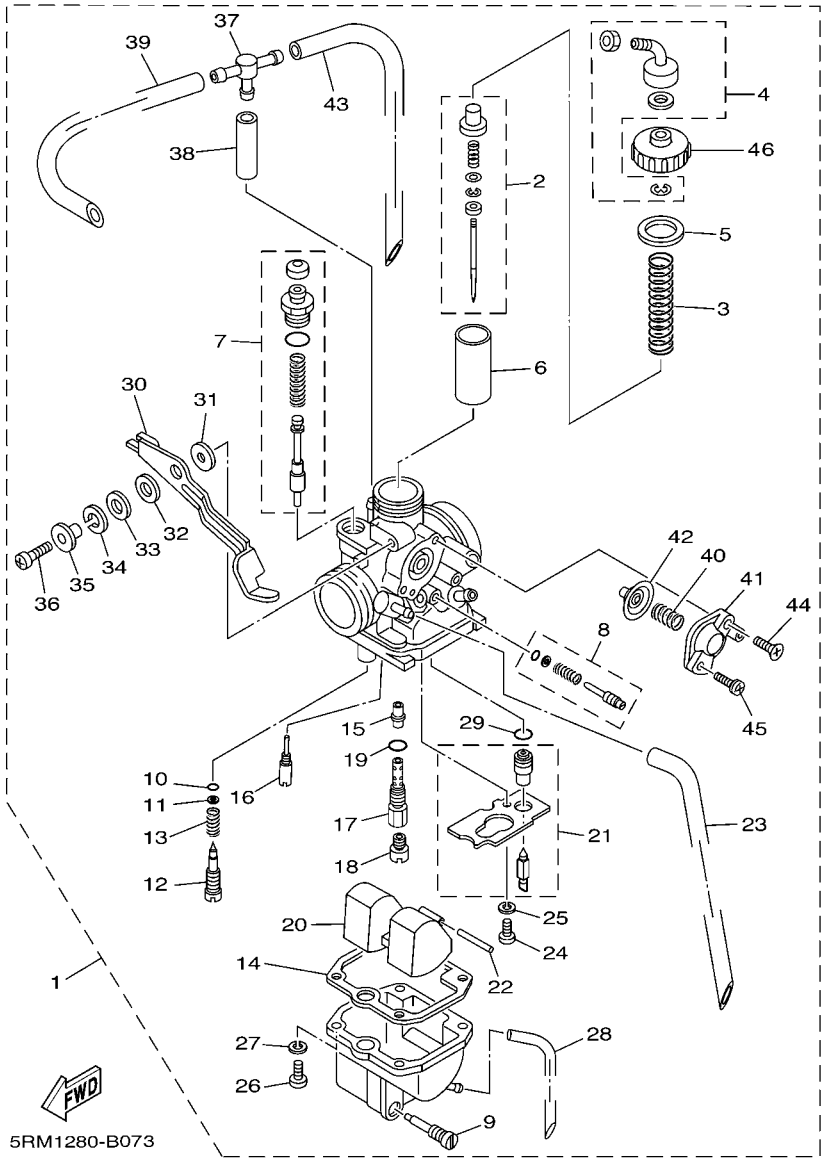

FIG. 7 CARBURETOR CARBURADOR

REF. NO.	PART NO. CODIGO Nº	DESCRIPTION DESCRIPCION	41B4					REMARKS OBSERVACIONES
28	5RM–14196–10	.PIPE, OVER FLOW 1 .TUBO DE DRENASE	1					
29	4LS–14147–00	.O-RING .ANILLO O	1					
30	5YM–14276–00	.LEVER .PALANCA	1					
31	3SP–14179–00	.WASHER, STARTER LEVER .ARANDELA PALANCA ARRANQUE	1					
32	3SP–14194–00	.RING .ANILLO	1					
33	3SP–14128–00	.WASHER .ARANDELA	1					
34	92907–08100	.WASHER, SPRING .ARANDELA	1					
35	3SP–14264–00	.COLLAR .ESPACIADOR	1					
36	3SP–14216–00	.SCREW .TORNILLO	1					
37	66E–14251–00	.NIPPLE .NIPLE	1					
38	5HP–14348–00	.PIPE 1 .MANGUERA	1					
39	5RM–14197–10	.PIPE .TUBO RESPIRADERO	1					
40	5AP–14933–00	.SPRING, DIAPHRAGM .RESORTE DE DIAFRAGMA	1					
41	5HP–14280–00	.COVER, CARBURETOR .CUBIERTA DE CARBURADOR	1					
42	5AP–14940–00	.DIAPHRAGM ASSY .DIAFRAGMA COMPLETO	1					
43	5RM–14197–30	.PIPE .TUBO RESPIRADERO	1					
44	5HP–14565–00	.SCREW .TORNILLO	1					
45	5HP–14216–00	.SCREW .TORNILLO	1					
46	4LS–14158–00	.TOP, MIXING CHAMBER .TECHO DE CAMARA DE MEZCLA	1					

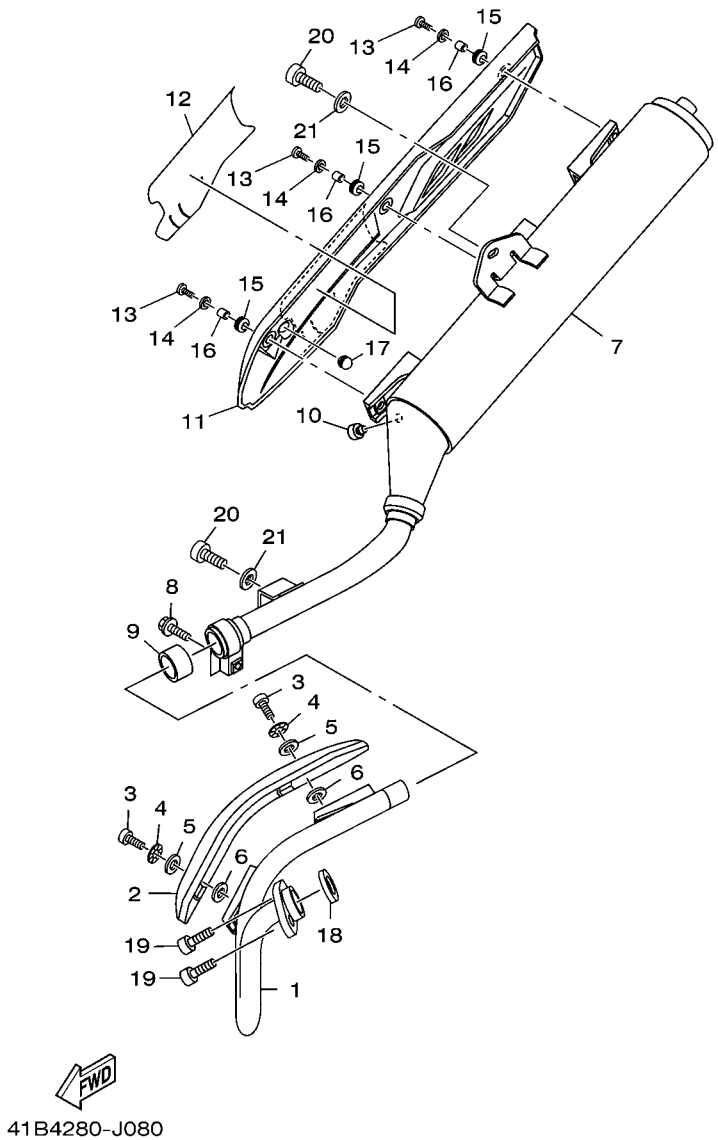

FIG. 8 EXHAUST DESCARGA

REF. NO.	PART NO. CODIGO Nº	DESCRIPTION DESCRIPCION	41B4					REMARKS OBSERVACIONES
1	5RM–E4611–02	PIPE, EXHAUST 1 TUBO DE ESCAPE 1	1					
2	22D–E4628–00	PROTECTOR, EXHAUST PIPE PROTECTOR DE TUBO DE ESCAPE	1					
3	98980–06010	SCREW, BIND TORNILLO DE LIGAR	2					
4	90206–06090	WASHER, WAVE ARANDELA ONDULADA	2					
5	90202–05187	WASHER, PLATE ARANDELA DE PLANA	2					
6	90202–05188	WASHER, PLATE ARANDELA DE PLANA	2					
7	58S–E4711–00	MUFFLER 1 SILENCIADOR 1	1					
8	9502M–08035	BOLT, FLANGE PERNO, DE BRIDA	1					
9	4FU–14714–10	GASKET, MUFFLER EMPAQUE DE SILENCIADOR	1					
10	2TY–F4181–00	DAMPER, LOCATING 1 AMORTIGUADOR DE MONTAJE 1	1					
11	21D–E4758–00	PROTECTOR, SILENCER PROTECTOR DE SILENCIADOR	1					
12	21D–14718–00	PROTECTOR, MUFFLER 1 PROTECTOR DE SILENCIADOR 1	1					
13	98980–06014	SCREW, BIND TORNILLO DE LIGAR	3					
14	90201–062G3	WASHER, PLATE ARANDELA PLANA	3					
15	90480–12581	GROMMET TAPON	3					
16	90387–06023	COLLAR ESPACIADOR	3					
17	5VY–14757–00	DAMPER, MUFFLER 2 AMORTIGUADOR SILENCIADOR 2	1					
18	5HH–E4613–00	GASKET, EXHAUST PIPE JUNTA, TUBO DE ESCAPE	1					
19	9131M–06020	BOLT PERNO	2					
20	9131M–08016	BOLT PERNO	2					
21	90201–08326	WASHER, PLATE ARANDELA PLANA	2					

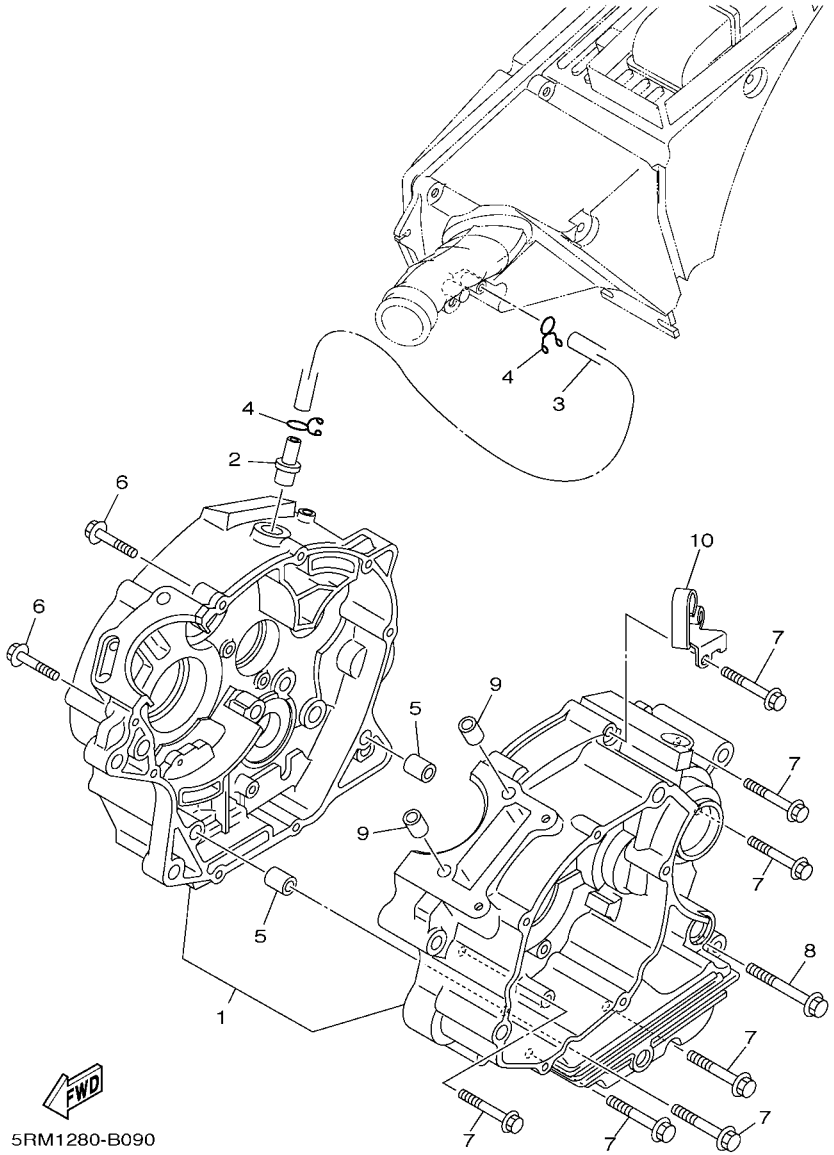

FIG. 9 CRANKCASE CARTER

REF. NO.	PART NO. CODIGO Nº	DESCRIPTION DESCRIPCION	41B4					REMARKS OBSERVACIONES
1	5HH–E5150–41	CRANKCASE ASSY CARTER COMPLETO	1					
2	5HH–E1167–00	PIPE, BREATHER 2 CUBIERTA RESPIRADERO 2	1					
3	5RM–E1166–10	PIPE, BREATHER 1 TUBO RESPIRADERO 1	1					
4	90467–13858	CLIP PRESILLA	2					
5	99530–10114	PIN, DOWEL PASADOR, DE ESPIGA	2					
6	90109–06W35	BOLT PERNO	2					
7	90109–06W36	BOLT PERNO	7					
8	90109–06W37	BOLT PERNO	1					
9	99530–10114	PIN, DOWEL PASADOR, DE ESPIGA	2					
10	5RM–E5441–00	HOLDER, CLUTCH CABLE SOSTEN DE CABLE DE EMBRAGUE	1					

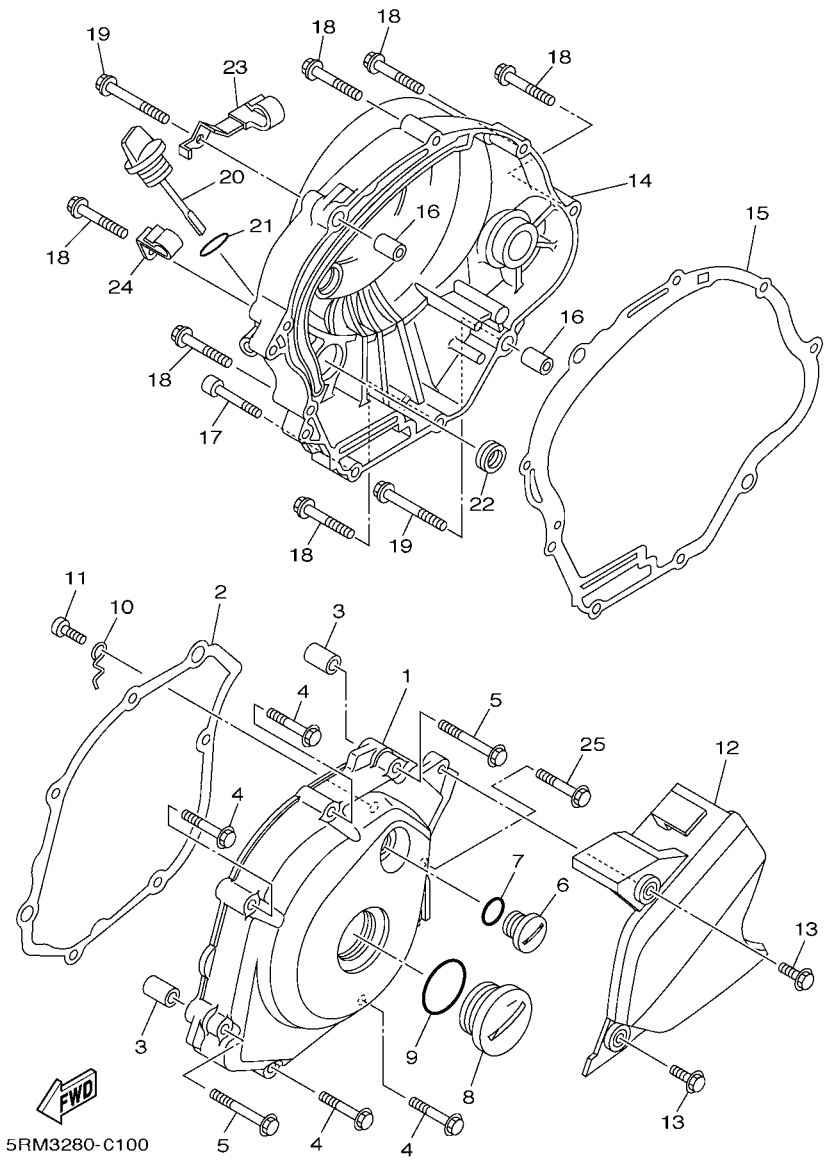

FIG. 10 CRANKCASE COVER 1 CUBIERTA DE CARTER 1

REF. NO.	PART NO. CODIGO Nº	DESCRIPTION DESCRIPCION	41B4					REMARKS OBSERVACIONES
1	5HH–E5411–01	COVER, CRANKCASE 1 CUBIERTA DE CARTER 1	1					
2	5HH–E5451–00	GASKET, CRANKCASE COVER 1 EMPAQ DE CUBIERTA DE CARTER	1					
3	99530–10114	PIN, DOWEL PASADOR, DE ESPIGA	2					
4	9502M–06035	BOLT, FLANGE PERNO, DE BRIDA	4					
5	9502M–06045	BOLT, FLANGE PERNO, DE BRIDA	2					
6	90340–14W02	PLUG, STRAIGHT SCREW TORNILLO, DE DRENAJE	1					
7	93210–14800	O-RING ANILLO O	1					
8	90340–32W03	PLUG, STRAIGHT SCREW TORNILLO, DE DRENAJE	1					
9	93210–32800	O-RING ANILLO O	1					
10	5HH–E5191–00	PLATE PLACA	1					
11	9851M–06010	SCREW, PAN HEAD TORNILLO DE CABEZA CON PLANA	1					
12	5RM–E5418–00	COVER, CHAIN CASE CUBIERTA CAJA DE CADENA	1					
13	9581M–06016	BOLT, FLANGE TORNILLO	2					
14	5LX–E5421–00	COVER, CRANKCASE 2 TAPA DE CARTER DERECHA	1					
15	5HH–E5461–00	GASKET, CRANKCASE COVER 2 JUNTA TAPA CARTER DERECHO 2	1					
16	99530–10114	PIN, DOWEL PASADOR, DE ESPIGA	2					
17	91380–06035	BOLT PERNO	1					
18	9502M–06035	BOLT, FLANGE PERNO, DE BRIDA	6					
19	9502M–06045	BOLT, FLANGE PERNO, DE BRIDA	2					
20	5HH–E5362–00	PLUG, OIL LEVEL TAPON DEL NIVEL DE ACEITE	1					
21	93210–19123	O-RING ANILLO O	1					
22	93101–10800	OIL SEAL SELLO ACEITE	1					
23	90465–08802	CLAMP BRIDA	1					
24	90465–08801	CLAMP BRIDA	1					
25	90109–06W38	BOLT PERNO	1					

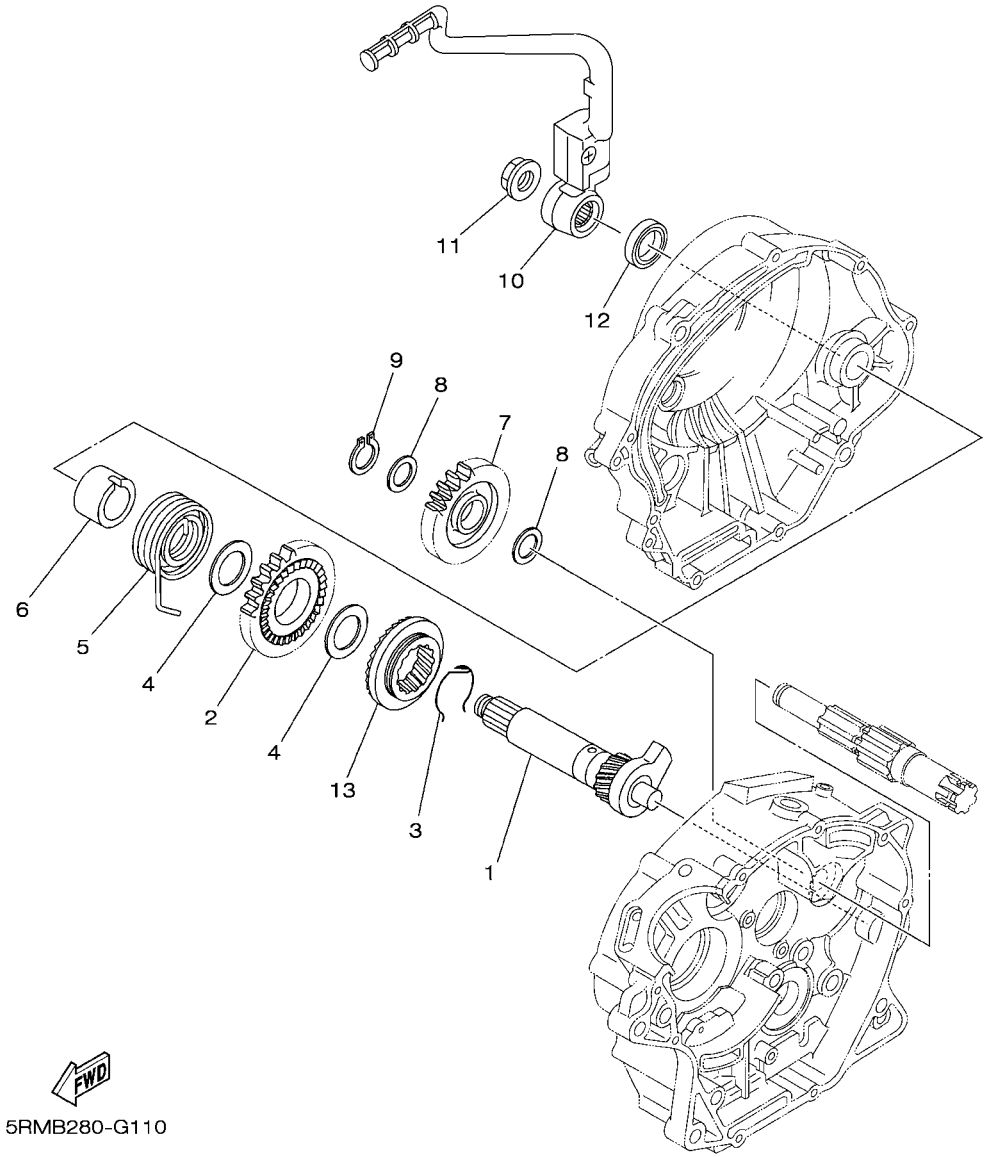

FIG. 11 STARTER ARRANQUE

REF. NO.	PART NO. CODIGO Nº	DESCRIPTION DESCRIPCION	41B4					REMARKS OBSERVACIONES
1	5RM–15660–10	KICK AXLE ASSY EJE DEL PEDAL DE ARRAN.COMPLET	1					
2	5LX–15641–00	GEAR, KICK ENGRANAJE PEDAL ARRANQUE	1					
3	90468–26048	CLIP PRESILLA	1					
4	90201–202L3	WASHER, PLATE (0.5T) ARANDELA DE PLACA(0.5T)	2					
5	90508–26667	SPRING, TORSION RESORTE DE TORSION	1					
6	5LX–E5666–00	SPACER SEPARADOR	1					
7	5LX–15651–00	GEAR, KICK IDLE PINON LIBRE, PEDAL ARRANQUE	1					
8	90201–177G4	WASHER, PLATE ARANDELA PLANA	2					
9	99009–17400	CIRCLIP PRESILLA REDONDA	1					
10	5RM–E5620–00	KICK CRANK ASSY PEDAL DE ARRANQUE COMPLETO	1					
11	90179–12813	NUT TUERCA	1					
12	93109–20014	OIL SEAL RETEN DE ACEITE	1					
13	5LX–E5671–00	WHEEL, RATCHET RUEDA DE TRINQUETE	1					

FIG. 12 STARTER CLUTCH EMBRAGUE DEL ARRANQUE

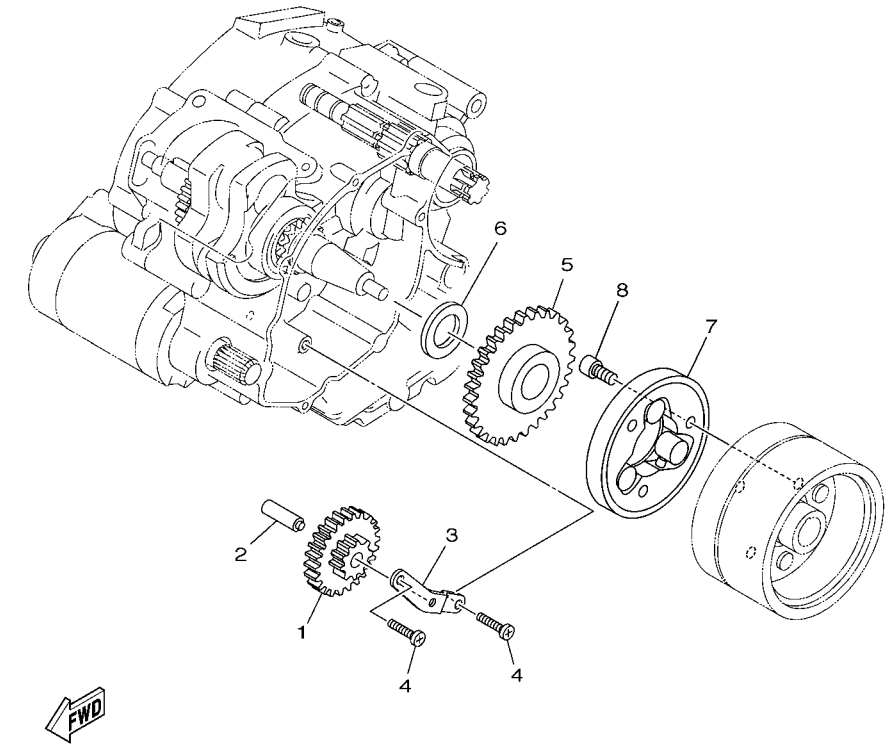

5RR9280-F120

REF. NO.	PART NO. CODIGO Nº	DESCRIPTION DESCRIPCION	41B4					REMARKS OBSERVACIONES
1	5VL–E5512–00	GEAR, IDLER 1 ENGRENAJE NEUTRO	1					
2	5HH–E5521–00	SHAFT 1 EJE 1	1					
3	5HH–E5532–00	PLATE, IDLE GEAR PLACA DE ENGRENAJE NEUTRO	1					
4	9851M–06012	SCREW, PAN HEAD TORNILLO DE CABEZA CON PLANA	2					
5	5VL–E5517–00	GEAR, IDLER 2 ENGRENAJE POSICION 2DA	1					
6	90201–25290	WASHER, PLATE ARANDELA PLANA	1					
7	4FP–E5580–00	STARTER CLUTCH OUTER ASSY ENSAMBLE EXT.EMBRAGUE ARRANQUE	1					
8	9131M–08016	BOLT PERNO	3					

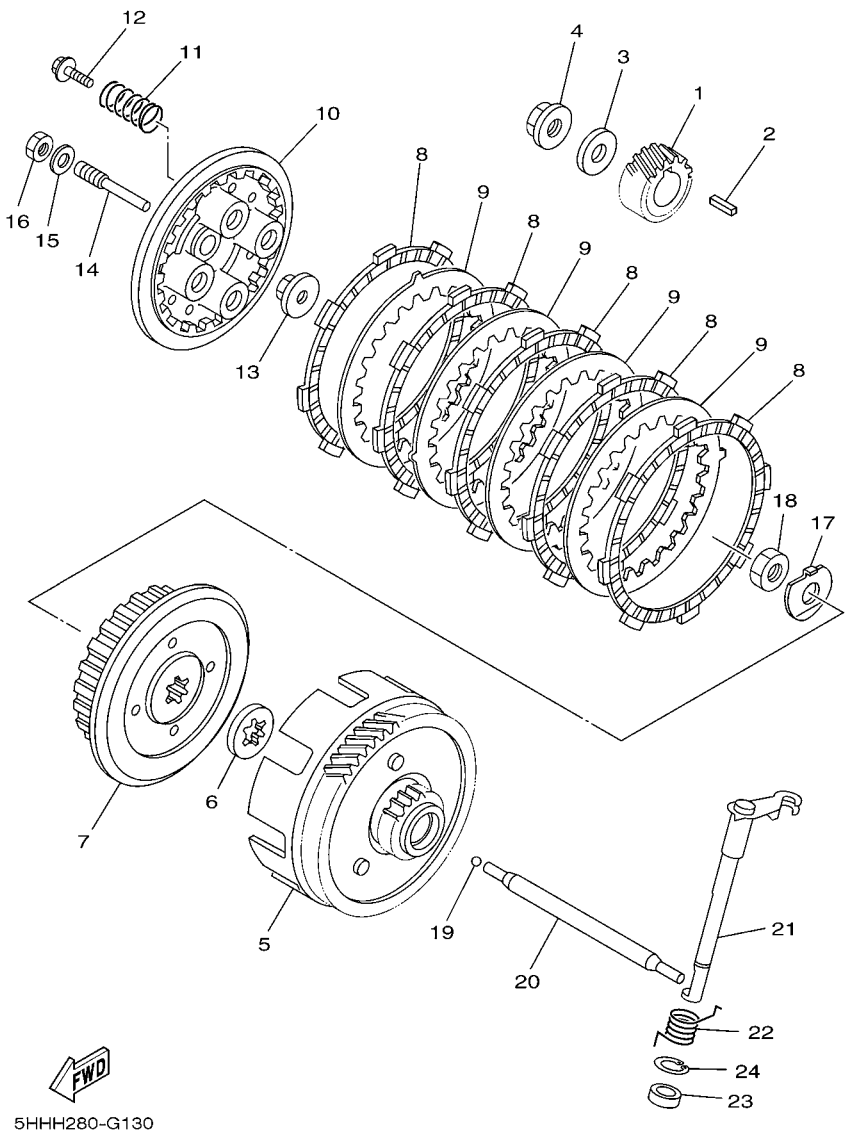

FIG. 13 CLUTCH EMBRAGUE

REF. NO.	PART NO. CODIGO Nº	DESCRIPTION DESCRIPCION	41B4					REMARKS OBSERVACIONES
1	5RE–16111–00	GEAR, PRIMARY DRIVE ENGRANAJE TRACC.PRIMARIA	1					
2	90282–05001	KEY, STRAIGHT (5MMX16MM) CHAVETA, RECTA (5MMX16MM)	1					
3	90201–122H1	WASHER, PLATE ARANDELA PLANA	1					
4	90179–12813	NUT TUERCA	1					
5	5RM–E6150–10	PRIMARY DRIVEN GEAR COMP. CAMPANA DE EMBRAGUE	1					
6	5RM–E6154–00	PLATE, THRUST 1 ARANDELA, DE EMPUJE 1	1					
7	5RM–E6371–00	BOSS, CLUTCH CUBO, DE EMBRAGUE	1					
8	5HH–E6321–00	PLATE, FRICTION PLACA DE FRICCION	5					
9	5RM–E6324–00	PLATE, CLUTCH 1 PLACA DE EMBRAGUE	4					
10	5RM–E6351–00	PLATE, PRESSURE 1 PLATO DE PRESION	1					
11	5RM–E6333–00	SPRING, CLUTCH 1 RESORTE DE EMBRAGUE 1	4					
12	5RM–E6337–00	SCREW, SPRING TORNILLO DE RESORTE	4					
13	5RM–E6358–00	PLATE, PUSH PLACA DE EMPUJE	1					
14	5RM–E6356–00	ROD, PUSH 1 VARILLA DE EMPUJE 1	1					
15	5RM–E6628–00	WASHER ARANDELA	1					
16	5RM–E6377–00	NUT, LOCK TUERCA DE CIERRE	1					
17	90215–12211	WASHER, LOCK ARANDELA DE CIERRE	1					
18	90170–12060	NUT TUERCA	1					
19	93503–16802	BALL ESFERA	1					
20	5HH–E6357–00	ROD, PUSH 2 VARILLA DE EMPUJE 2	1					
21	5RM–E6381–01	PUSH LEVER COMP. CONJ. PALANCA DE EMPUJE	1					
22	90508–16W13	SPRING, TORSION RESORTE DE TORSION	1					
23	93102–12224	OIL SEAL SELLO ACEITE	1					
24	99009–20500	CIRCLIP PRESILLA REDONDA	1					

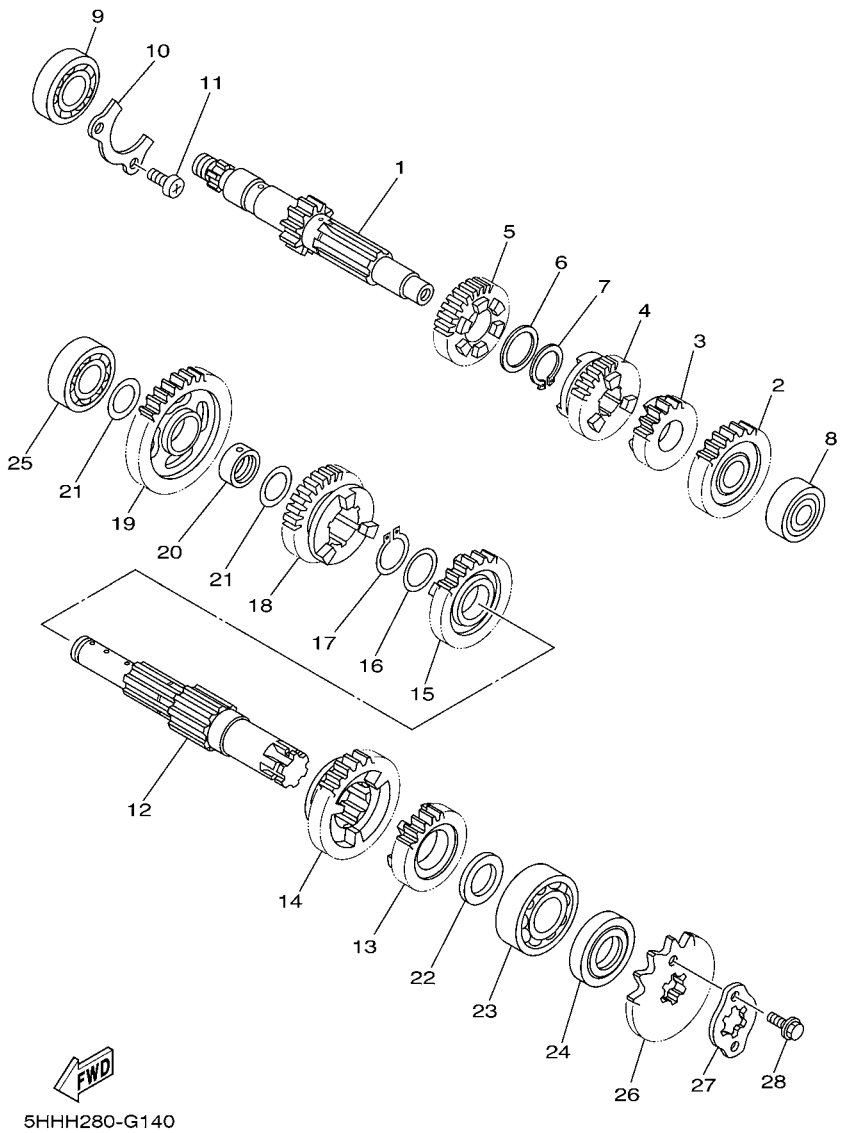

FIG. 14 TRANSMISSION TRANSMISION

REF. NO.	PART NO. CODIGO Nº	DESCRIPTION DESCRIPCION	41B4					REMARKS OBSERVACIONES
1	5HH–E7411–10	AXLE, MAIN EJE PRIMARIO	1					
2	5HH–E7151–20	GEAR, 5TH PINION (24T) ENGRANAJE PINON DE 5TA (24D)	1					
3	5RM–17121–00	GEAR, 2ND PINION (18T) ENGRANAJE PINON DE 2DA (18D)	1					
4	5RM–17131–00	GEAR, 3RD PINION (19T) ENGRANAJE PINON DE 3RA (19D)	1					
5	5RM–E7141–00	GEAR, 4TH PINION (22T) ENGRANAJE PINON DE 4TA (22D)	1					
6	90201–20266	WASHER, PLATE (T=1.0) ARANDELA, PLACA (T=1.0)	1					
7	93410–20809	CIRCLIP SEGURO	1					
8	93306–201X3	BEARING COJINETE	1					
9	93306–203YG	BEARING COJINETE	1					
10	5HH–E7471–00	PLATE, COVER PLACA, DE CUBIERTA	1					
11	9851M–06014	SCREW, PAN HEAD TORNILLO DE CABEZA CON PLANA	2					
12	5HH–E7402–30	DRIVE AXLE ASSY EJE DE TRACCION COMPLETO	1					
13	5HH–E7251–20	GEAR, 5TH WHEEL (21T) ENGRANAJE RUEDA DE 5TA (21D)	1					
14	5RM–17221–00	GEAR, 2ND WHEEL (32T) ENGRANAJE RUEDA DE 2DA (32D)	1					
15	5RM–17231–10	GEAR, 3RD WHEEL (25T) ENGRANAJE RUEDA DE 3RA (25D)	1					
16	90214–19002	WASHER, CLAW ARANDELA DE POSICION	1					
17	93410–22039	CIRCLIP SEGURO	1					
18	5RM–E7241–00	GEAR, 4TH WHEEL (23T) ENGRANAJE DE RUEDA 4TA (23D)	1					
19	5HH–E7211–20	GEAR, 1ST WHEEL (37T) ENGRANAJE RUEDA DE 1 RA (37D)	1					
20	5LX–E7258–00	COLLAR 1 COLLAR 1	1					
21	90201–177G4	WASHER, PLATE ARANDELA PLANA	2					
22	90201–20272	WASHER, PLATE ARANDELA PLANA	1					
23	93306–204X8	BEARING COJINETE	1					
24	93102–20143	OIL SEAL SELLO ACEITE	1					
25	93306–203XD	BEARING COJINETE	1					
26	93822–14043	SPROCKET,DRIVE (14T) RUEDA DENTAD (14D)	1					
27	4AN–E7456–00	HOLDER, SPROCKET SOPORTE DE CORONA	1					

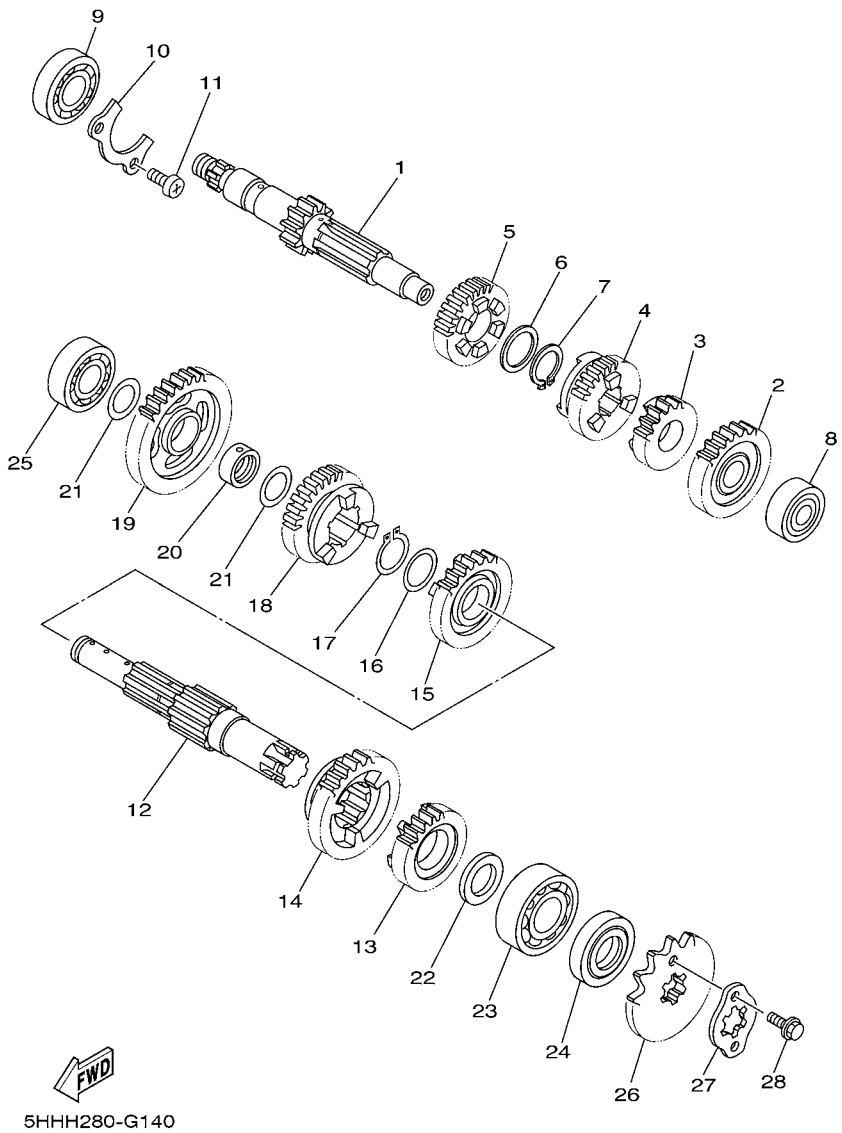

FIG. 14 TRANSMISSION TRANSMISION

REF. NO.	PART NO. CODIGO Nº	DESCRIPTION DESCRIPCION	41B4					REMARKS OBSERVACIONES
28	9502M–06010	BOLT, FLANGE PERNO, DE BRIDA	2					

FIG. 15 SHIFT CAM & FORK — LEVA DE CAMBIO & HORQUILLA

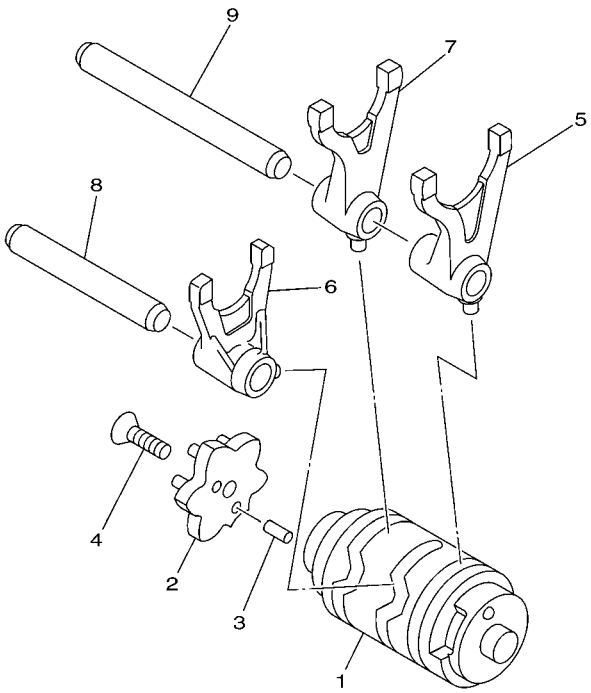

5HP1100-0140

REF. NO.	PART NO. CODIGO Nº	DESCRIPTION DESCRIPCION	41B4					REMARKS OBSERVACIONES
1	5HH–E8540–00	SHIFT CAM ASSY LEVA DEL CAMBIO COMPLETA	1					
2	5HH–E8185–00	SEGMENT SEGMENTO DE RETENCION	1					
3	93604–10011	PIN, DOWEL PASADOR DE CLAVIJA	2					
4	90149–06W03	SCREW TORNILLO DE REGLAJE	1					
5	5HH–E8511–00	FORK, SHIFT 1 HORQUILLA DEL CAMBIO 1	1					
6	5HH–E8512–00	FORK, SHIFT 2 HORQUILLA DEL CAMBIO 2	1					
7	5HH–E8513–00	FORK, SHIFT 3 HORQUILLA DEL CAMBIO 3	1					
8	5HH–E8531–00	BAR, SHIFT FORK GUIDE 1 BARRA GUIA HORQ. CAMBIO 1	1					
9	5HH–E8535–00	BAR, SHIFT FORK GUIDE 2 BARRA GUIA HORQ .CAMBIO 2	1					

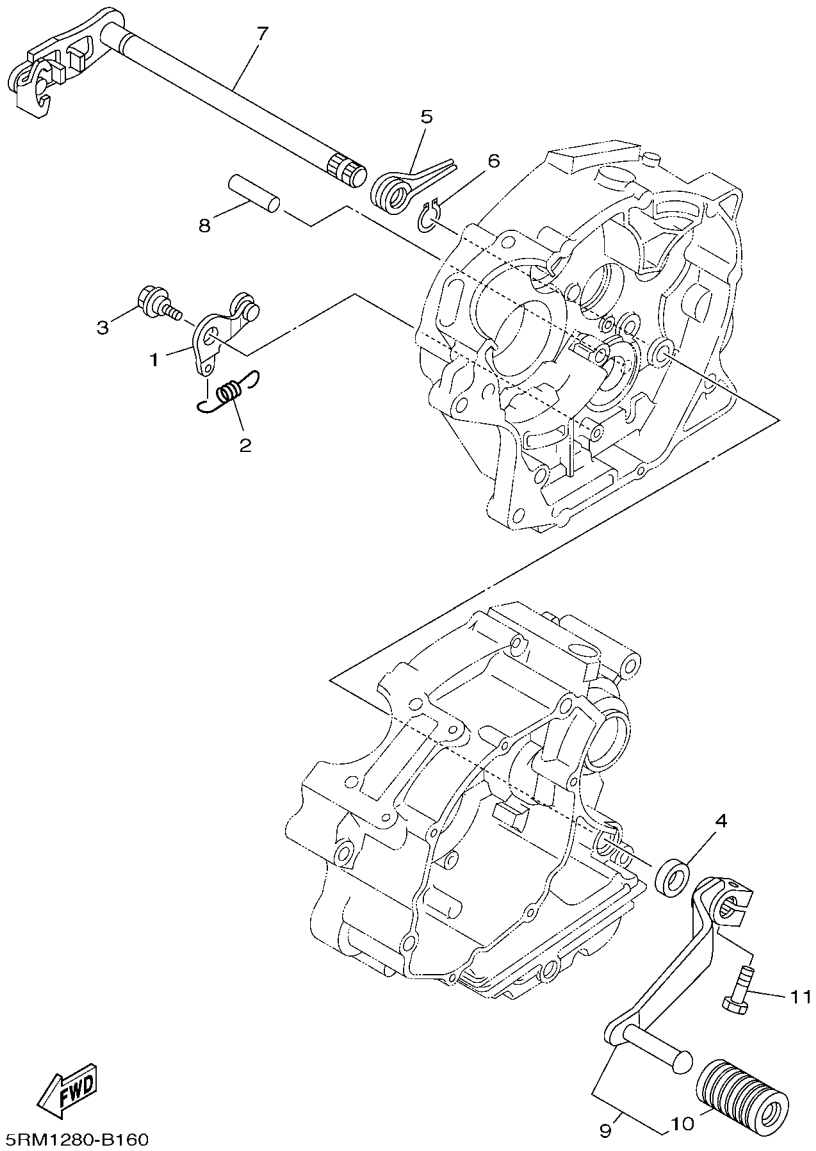

FIG. 16 SHIFT SHAFT — EJE DE CAMBIO & PEDAL

REF. NO.	PART NO. CODIGO Nº	DESCRIPTION DESCRIPCION	41B4					REMARKS OBSERVACIONES
1	5HH–E8140–00	STOPPER LEVER ASSY PALANCA DE TOPE COMPLETA	1					
2	5HH–E8337–00	SPRING RESORTE	1					
3	90109–063F7	BOLT PERNO	1					
4	93101–12173	OIL SEAL SELLO ACEITE	1					
5	90508–32W15	SPRING, TORSION RESORTE DE TORSION	1					
6	99001–10600	CIRCLIP PRESILLA REDONDA	1					
7	5HH–E8101–01	SHIFT SHAFT ASSY EJE SELECTOR COMPLETO	1					
8	93608–30839	PIN, DOWEL PASADOR DE CLAVIJA	1					
9	5RM–E8110–00	SHIFT PEDAL ASSY PEDAL DE CAMBIO COMPLETO	1					
10	5HH–E8113–00	.COVER, SHIFT PEDAL .FUNDA DEL PEDAL DEL CAMBIO	1					
11	97017–06020	BOLT PERNO	1					

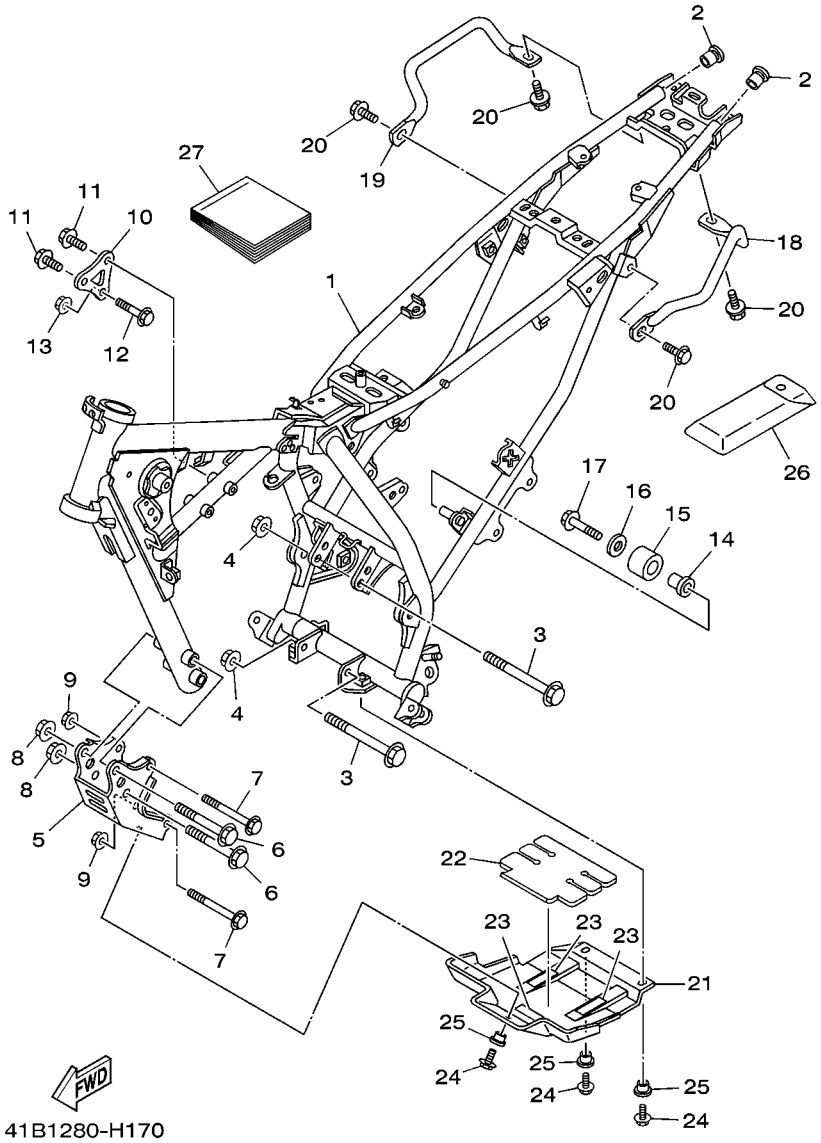

FIG. 17 FRAME CUADRO

REF. NO.	PART NO. CODIGO Nº	DESCRIPTION DESCRIPCION	41B4					REMARKS OBSERVACIONES
1	21D–F1110–00–33	FRAME COMP. ARMAZON COMPLETO	1					YB YB
2	90338–16148	PLUG TAPON	2					
3	90105–08007	BOLT, FLANGE TORNILLO	2					
4	90185–08169	NUT, SELF-LOCKING TUERCA AUTOBLOCANTE	2					
5	5RM–F1316–10–33	STAY, ENGINE 3 SOPORTE DE MOTOR 3	1					YB YB
6	9581M–10075	BOLT, FLANGE TORNILLO	2					
7	90105–08011	BOLT, FLANGE TORNILLO	2					
8	95607–10200	NUT, U FLANGE TUERCA DE AUTO-CIERRE	2					
9	90185–08169	NUT, SELF-LOCKING TUERCA AUTOBLOCANTE	2					
10	5RM–F1317–00–35	STAY, ENGINE 3 SOPORTE DE MOTOR 3	1					SL SL
11	90105–08846	BOLT, FLANGE TORNILLO	2					
12	90105–08002	BOLT, FLANGE TORNILLO	1					
13	90185–08169	NUT, SELF-LOCKING TUERCA AUTOBLOCANTE	1					
14	5RM–F2184–00	BUSH BUJE	1					
15	5RM–F2178–00	TENSIONER TENSOR	1					
16	90201–08753	WASHER, PLATE ARANDELA PLANA	1					
17	9502M–08012	BOLT, FLANGE PERNO, DE BRIDA	1					
18	5RM–F127A–10–33	HANDLE, STANDING MANIJA FIJA	1					YB YB
19	5RM–F1275–10–33	STAY, REAR SOPORTE TRASERO	1					YB YB
20	9582M–08014	BOLT TORNILLO	4					
21	1B2–F1471–00	PROTECTOR, ENGINE PROTECTOR DE MOTOR	1					AP AP
22	1B2–F1485–00	DAMPER, RUBBER 1 AMORTIGUADOR DE GOMA 1	1					AP AP
23	1B2–F1268–00	SEAL SELLO	3					AP AP
24	9580M–06016	BOLT, FLANGE TORNILLO	3					AP AP
25	90387–06681	COLLAR ESPACIADOR	3					AP AP
26	5RM–28100–00	TOOL KIT JUEGO DE HERRAMIENTAS	1					
27	41B–F8199–S0	MANUAL,OWNER'S MANUAL DEL PROPRIETARIO	1					

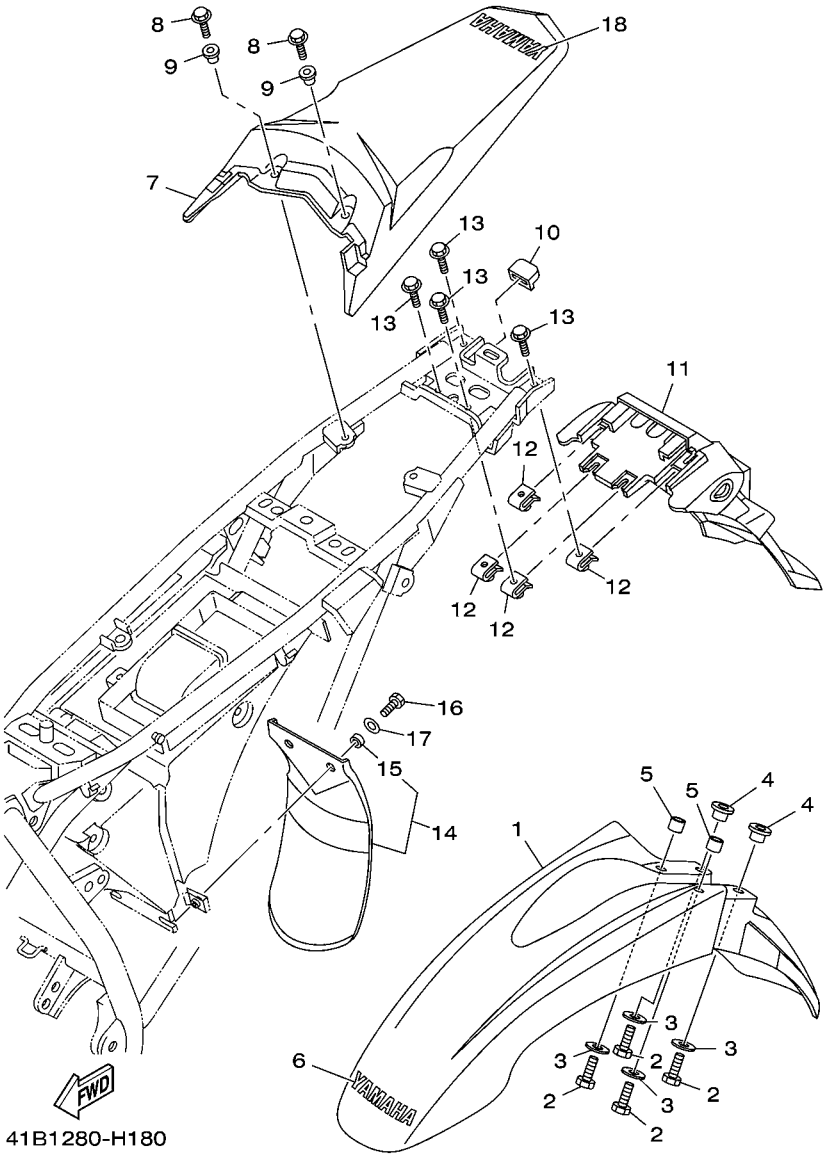

FIG. 18 FENDER GUARDABARRO

REF. NO.	PART NO. CODIGO Nº	DESCRIPTION DESCRIPCION	41B4					REMARKS OBSERVACIONES
1	5RM–F1511–10	FENDER, FRONT GUARDABARRO DELANTERO	1					HTR HTR
	5RM–F1511–00	FENDER, FRONT GUARDABARRO DELANTERO	1					DPBSE DPBSE
	5RM–F1511–20	FENDER, FRONT GUARDABARRO DELANTERO	1					YB YB
2	9700M–06020	BOLT PERNO	4					
3	90201–06804	WASHER, PLATE ARANDELA PLANA	4					
4	90387–061V4	COLLAR ESPACIADOR	2					
5	90387–06023	COLLAR ESPACIADOR	2					
6	5HH–F153E–30	EMBLEM, YAMAHA EMBLEMA, YAMAHA	1					UR FOR HTR,YB UR PARA HTR,YB
	5HH–F153E–00	EMBLEM, YAMAHA EMBLEMA, YAMAHA	1					UR FOR DPBSE UR PARA DPBSE
7	5RM–F1611–C0	FENDER, REAR GUARDABARRO TRASERO	1					HTR HTR
	5RM–F1611–A0	FENDER, REAR GUARDABARRO TRASERO	1					DPBSE DPBSE
	5RM–F1611–B0	FENDER, REAR GUARDABARRO TRASERO	1					YB YB
8	9580M–06014	BOLT, FLANGE TORNILLO	2					
9	90387–06W62	COLLAR ESPACIADOR	2					
10	5RM–F1719–00	GROMMET ANILLO PROTECTOR	1					
11	5RM–F1685–00	BRACKET, LICENSE SOPORTE DE LICENCIA	1					
12	90183–06802	NUT, SPRING TUERCA DE RESORTE	4					
13	9580M–06014	BOLT, FLANGE TORNILLO	4					
14	5RM–F1642–00	GUARD, FLAP GUARDA DE CHARNELA	1					
15	90387–10W66	.COLLAR .ESPACIADOR	2					
16	9700M–06016	BOLT PERNO	2					
17	90201–06804	WASHER, PLATE ARANDELA PLANA	2					
18	5HH–F153E–30	EMBLEM, YAMAHA EMBLEMA, YAMAHA	1					UR FOR HTR,YB UR PARA HTR,YB
	5HH–F153E–00	EMBLEM, YAMAHA EMBLEMA, YAMAHA	1					UR FOR DPBSE UR PARA DPBSE

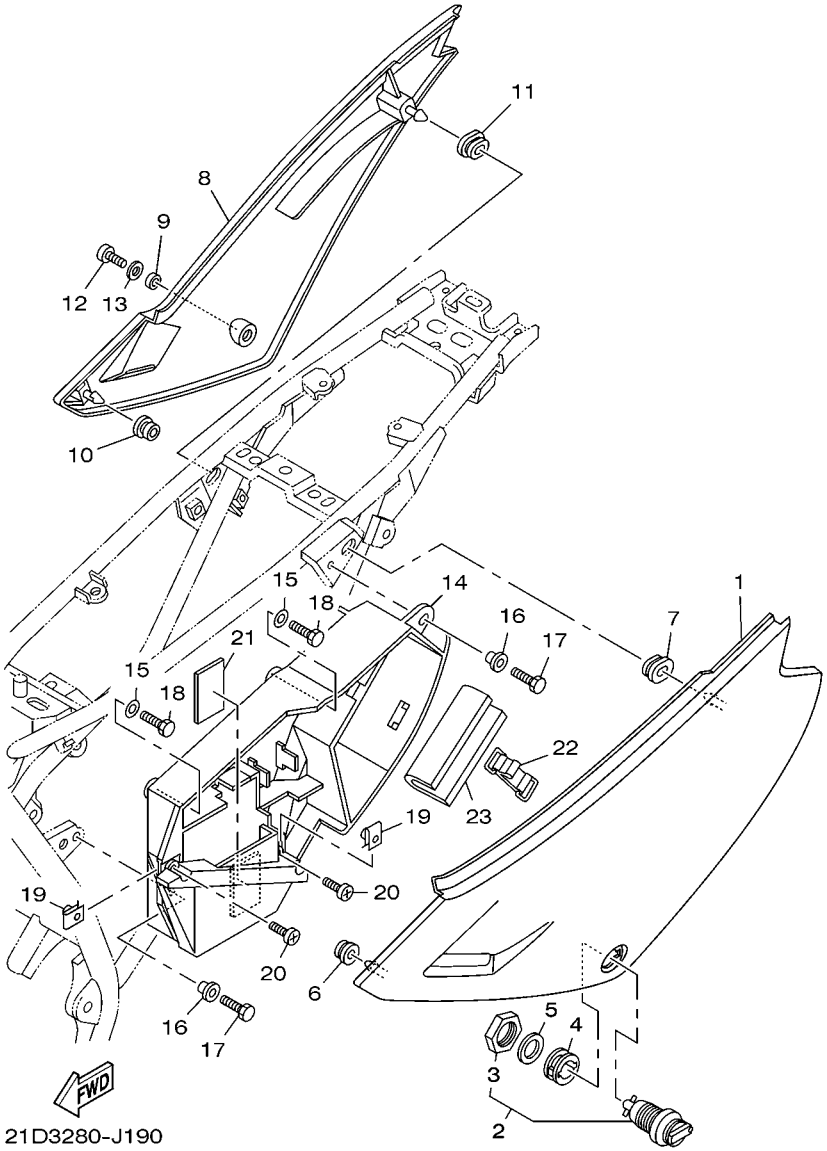

FIG. 19 SIDE COVER — CUBIERTA LATERAL

REF. NO.	PART NO. CODIGO Nº	DESCRIPTION DESCRIPCION	41B4					REMARKS OBSERVACIONES
1	5RM–F1711–20	COVER, SIDE 1 CUBIERTA LATERAL 1	1					HTR,YB HTR,YB
	5RM–F1711–30	COVER, SIDE 1 CUBIERTA LATERAL 1	1					DPBSE DPBSE
2	5VL–F1708–00	LOCK ASSY 2 CUBIERTA 2	1					
3	90170–22850	.NUT .TUERCA	1					
4	90480–24186	GROMMET TAPON	1					
5	90201–225A4	WASHER, PLATE (T=1.0) ARANDELA PLANA (T=1.0)	1					
6	90480–13567	GROMMET TAPON	1					
7	90480–01868	GROMMET TAPON	1					
8	5RM–F1721–20	COVER, SIDE 2 CUBIERTA LATERAL 2	1					HTR,YB HTR,YB
	5RM–F1721–30	COVER, SIDE 2 CUBIERTA LATERAL 2	1					DPBSE DPBSE
9	90387–1001B	COLLAR ESPACIADOR	1					
10	90480–13567	GROMMET TAPON	1					
11	90480–01868	GROMMET TAPON	1					
12	9890M–06016	SCREW, BIND TORNILLO DE LIGAR	1					
13	90201–06804	WASHER, PLATE ARANDELA PLANA	1					
14	5RM–F177G–00	BOX, BATTERY CAJA DE BATERIA	1					
15	90201–06804	WASHER, PLATE ARANDELA PLANA	2					
16	90387–06W62	COLLAR ESPACIADOR	2					
17	9700M–06016	BOLT PERNO	2					
18	90101–06W10	BOLT TORNILLO	2					
19	90183–06802	NUT, SPRING TUERCA DE RESORTE	2					
20	9890M–06016	SCREW, BIND TORNILLO DE LIGAR	2					
21	5RM–H2123–00	SEAT, BATTERY ASIENTO DE BATERIA	1					
22	5RM–H2131–00	BAND, BATTERY TIRANTE DE BATERIA	1					
23	5RM–F8267–00	DAMPER 5 AMORTIGUAFDOR 5	1					

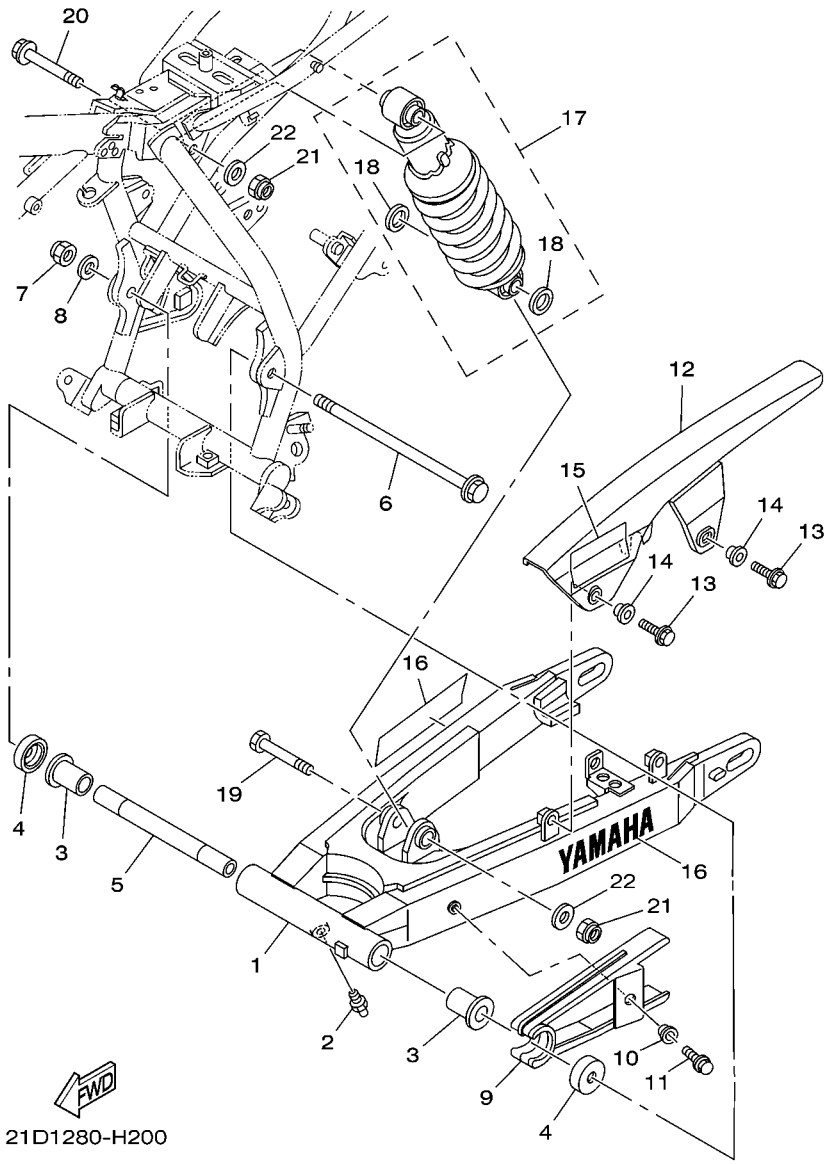

FIG. 20 REAR ARM & SUSPENSION BRAZO TRASERO & SUSPENSION

REF. NO.	PART NO. CODIGO Nº	DESCRIPTION DESCRIPCION	41B4					REMARKS OBSERVACIONES
1	21D–F2110–00–35	REAR ARM COMP. BRAZO TRASERO COMPLETO	1					SL SL
2	93700–06804	NIPPLE, GREASE BOQUILLA DE ENGRASAR	1					
3	90381–18800	BUSH, SOLID BUJE SOLIDO	2					
4	5L9–F2128–00	COVER, THRUST 1 TAPA DE EMPIJE 1	2					
5	5RM–F2126–00	COLLAR, DISTANCE COLLAR DISTANCIADOR	1					
6	4AN–F2141–11	SHAFT, PIVOT EJE DEL BARCULANTE	1					
7	90185–12134	NUT, SELF-LOCKING TUERCA AUTOBLOCANTE	1					
8	90201–12W69	WASHER, PLATE ARANDELA PLANA	1					
9	21D–F2151–00	SEAL, GUARD SELLO DE GUARDA	1					
10	90387–06W41	COLLAR ESPACIADOR	1					
11	95807–06020	BOLT, FLANGE TORNILLO	1					
12	5RM–F2311–00	CASE, CHAIN CABRECADENA	1					
13	9580M–06014	BOLT, FLANGE TORNILLO	2					
14	90387–06W62	COLLAR ESPACIADOR	2					
15	41B–F1668–00	LABEL, TIRE ETIQUETA DE FRANJA	1					
16	99244–00160	EMBLEM, YAMAHA EMBLEMA, YAMAHA	2					
17	5RM–22210–02	SHOCK ABSORBER ASSY, REAR AMORTIGUADOR TRASERO COMPLETO	1					
18	5NY–22475–00	.SEAL, DUST .SELLO PARA POLVO	2					
19	90101–12498	BOLT TORNILLO	1					
20	90105–12030	BOLT, FLANGE TORNILLO	1					
21	95617–12100	NUT, U TUERCA	2					
22	90201–124G9	WASHER, PLATE ARANDELA PLANA	2					

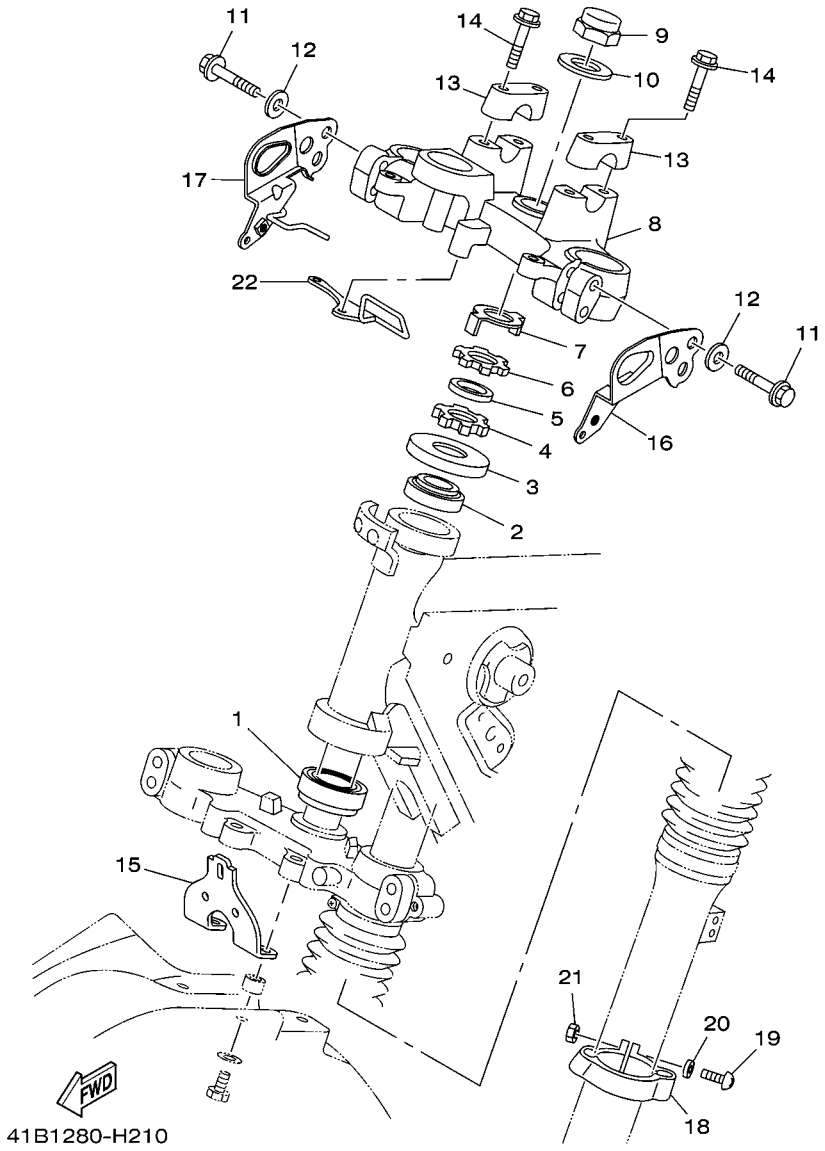

FIG. 21 STEERING DIRECCION

REF. NO.	PART NO. CODIGO Nº	DESCRIPTION DESCRIPCION	41B4					REMARKS OBSERVACIONES
1	93332–00079	BEARING COJINETE	1					
2	93399–99949	BEARING COJINETE	1					
3	5HP–23416–00	COVER, BALL RACE 2 CUBIERTA DE BASE DE BOLA 2	1					
4	90179–25W23	NUT TUERCA	1					
5	90202–26142	WASHER, PLATE ARANDELA DE PLANA	1					
6	90179–25W22	NUT TUERCA	1					
7	5HH–F3418–00	WASHER, SPECIAL ARANDELA ESPECIAL	1					
8	21D–F3435–00	CROWN, HANDLE PLATINA SUPERIOR	1					
9	90176–22081	NUT, CROWN TUERCA CORONA	1					
10	90201–220T0	WASHER, PLATE ARANDELA PLANA	1					
11	90105–08345	BOLT, FLANGE TORNILLO	4					
12	9290M–08200	WASHER ARANDELA	4					
13	3V9–F3441–10–35	HOLDER, HANDLE UPPER SOPORTE DE MANUBRIO	2					SL SL
14	9502L–08035	BOLT, FLANGE PERNO, DE BRIDA	4					
15	21D–F3174–00	STAY, HEADLIGHT SOPORTE DEL FARO DELANTERO	1					
16	41B–H4318–00	STAY, HEADLIGHT 1 APOYO DE FARO DELANTERO 1	1					
17	21D–H4319–00	STAY, HEADLIGHT 2 APOYO DE FARO DELANTERO 2	1					
18	4AN–F3317–01	HOLDER, CABLE SOSTEN DE CABLE	1					
19	9851M–05020	SCREW, PAN HEAD TORNILLO DE CABEZA CON PLANA	1					
20	9290M–05200	WASHER ARANDELA	1					
21	9530M–05600	NUT TUERCA	1					
22	21D–F3389–00	GUIDE, CABLE GUIA DE CABLE	1					

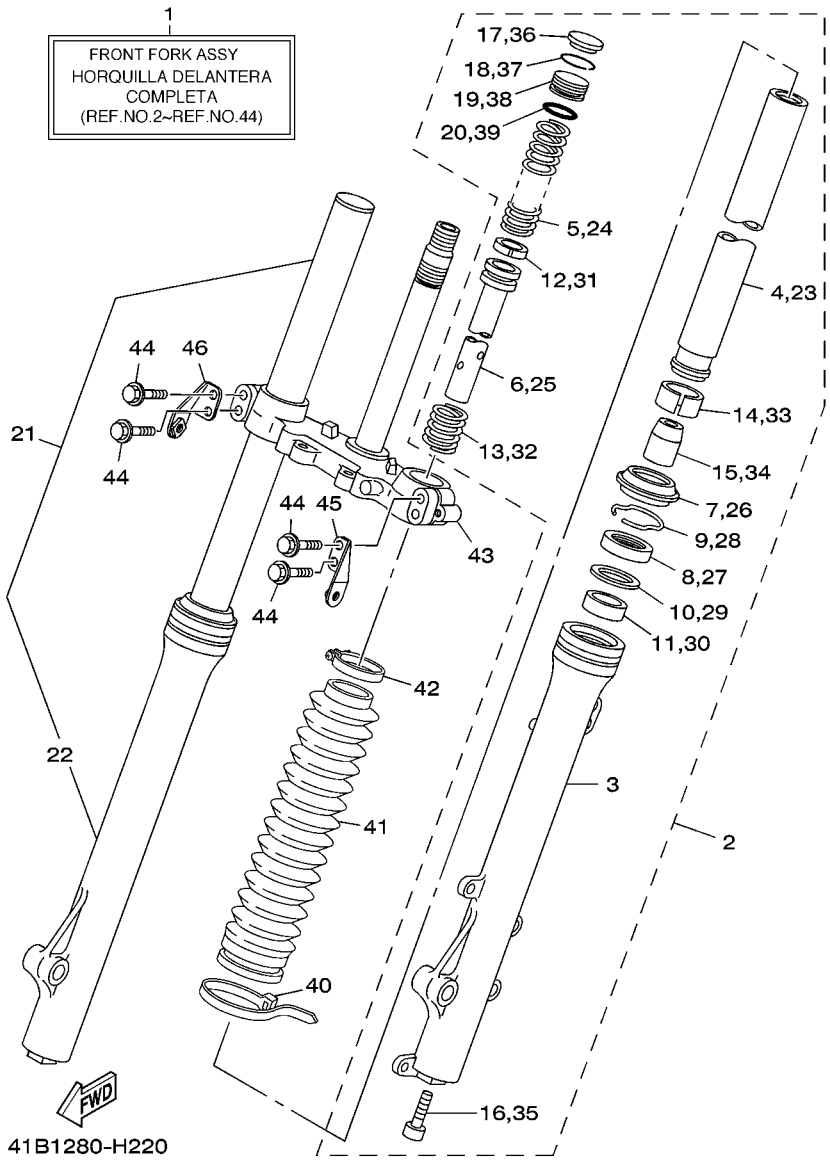

FIG. 22 FRONT FORK HORQUILLA DELANTERA

REF. NO.	PART NO. CODIGO Nº	DESCRIPTION DESCRIPCION	41B4					REMARKS OBSERVACIONES
1	5RM–F3100–00	FRONT FORK ASSY HORQUILLA DELANTERA COMPLETA	1					
2	5RM–F3102–00	.FRONT FORK ASSY (L.H) .HORQUILLA DELANTERA COMPL.(MI)	1					
3	5RM–F3126–00	..TUBE, OUTER (LEFT) ..TUBO EXTERIOR (IZQUIERDO)	1					
4	5RM–F3110–00	..INNER TUBE COMP.1 ..TUBO INTERIOR COMPLETO 1	1					
5	5RM–F3351–00	..SPRING ..RESORTE	1					
6	5RM–F3171–00	..PISTON, FRONT FORK ..PISTON HORQUILLA DELANT.	1					
7	2TW–F3144–A0	..SEAL, DUST ..GUARDAPOLVO	1					
8	2TW–F3145–A0	..OIL SEAL ..RETEN DE ACEITE	1					
9	34X–23156–00	..RING, SNAP ..ANILLO DE ENGANCHE	1					
10	10V–23147–00	..O-RING ..ARO	1					
11	5RM–F3125–00	..METAL, SLIDE 1 ..METAL CORREDIZO 1	1					
12	34X–23157–00	..RING, PISTON ..ANILLO DEL PISTON	1					
13	34X–23151–00	..SPRING, REBOUND ..RESORTE DE REBOTE	1					
14	5RM–F3135–00	..METAL, SLIDE 2 ..METAL CORREDIZO 2	1					
15	4AN–F3166–00	..SPACER, OIL LOCK ..SEPARADOR CIERRE DE ACEITE	1					
16	3M7–23181–00	..BOLT, HEXAGON SOCKET HEAD ..TORNILLO CABEZAHEXAGONAL	1					WITH WASHER CON ARANDELA
17	2TW–F3168–A0	..CAP, FRONT FORK ..TAPA DE HORQUILLA DELANTERA	1					
18	1UA–23153–00	..RING, SNAP ..ANILLO DE ENGANCHE	1					
19	2TW–F3111–A0	..BOLT, CAP ..PERNO DE TAPA	1					
20	35E–23114–00	..GASKET ..EMPAQUE	1					
21	5RM–F3103–00	.FRONT FORK ASSY (R.H) .HORQUILLA DELANTERA COMPL.(MD)	1					
22	5RM–F3136–00	..TUBE, OUTER (RIGHT) ..TUBO EXTERIOR (DERECHO)	1					
23	5RM–F3110–00	..INNER TUBE COMP.1 ..TUBO INTERIOR COMPLETO 1	1					
24	5RM–F3351–00	..SPRING ..RESORTE	1					
25	5RM–F3171–00	..PISTON, FRONT FORK ..PISTON HORQUILLA DELANT.	1					
26	2TW–F3144–A0	..SEAL, DUST ..GUARDAPOLVO	1					
27	2TW–F3145–A0	..OIL SEAL ..RETEN DE ACEITE	1					

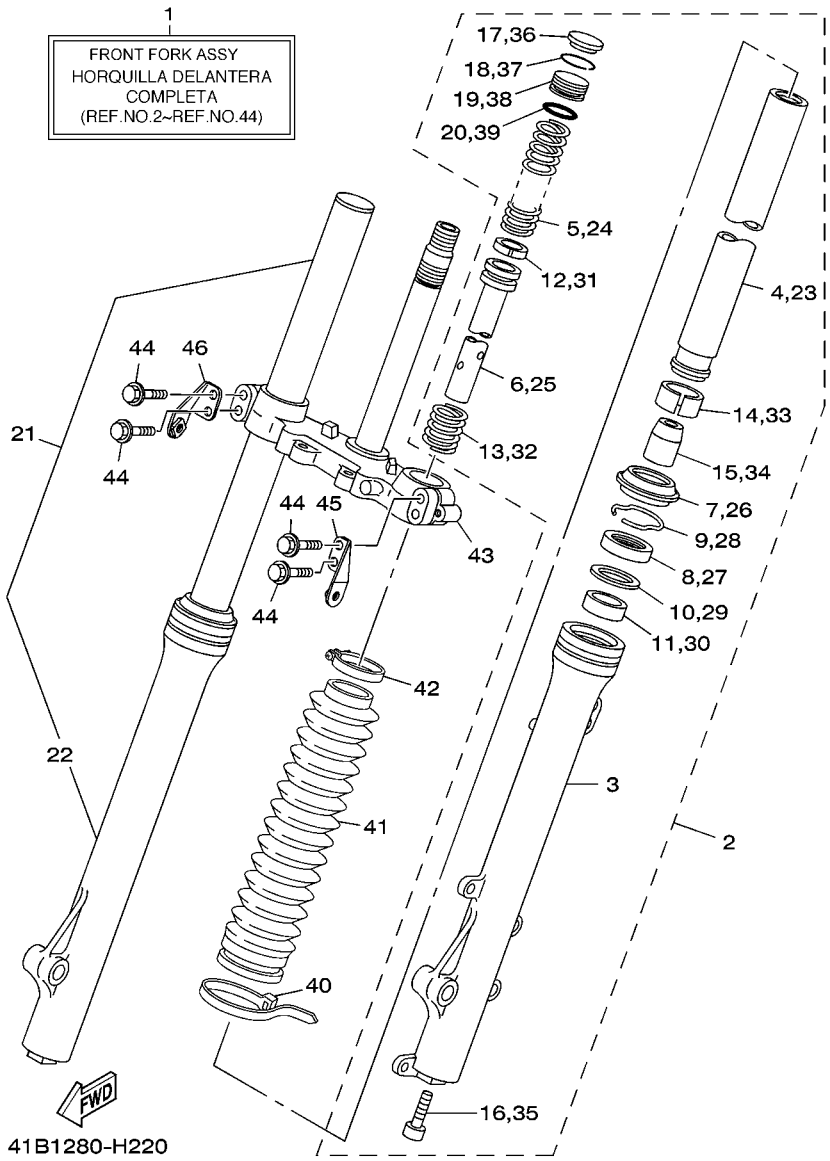

FIG. 22 FRONT FORK — HORQUILLA DELANTERA

REF. NO.	PART NO. CODIGO Nº	DESCRIPTION DESCRIPCION	41B4					REMARKS OBSERVACIONES
28	34X–23156–00	..RING, SNAP ..ANILLO DE ENGANCHE	1					
29	10V–23147–00	..O-RING ..ARO	1					
30	5RM–F3125–00	..METAL, SLIDE 1 ..METAL CORREDIZO 1	1					
31	34X–23157–00	..RING, PISTON ..ANILLO DEL PISTON	1					
32	34X–23151–00	..SPRING, REBOUND ..RESORTE DE REBOTE	1					
33	5RM–F3135–00	..METAL, SLIDE 2 ..METAL CORREDIZO 2	1					
34	4AN–F3166–00	..SPACER, OIL LOCK ..SEPARADOR CIERRE DE ACEITE	1					
35	3M7–23181–00	..BOLT, HEXAGON SOCKET HEAD ..TORNILLO CABEZAHEXAGONAL	1					WITH WASHER CON ARANDELA
36	2TW–F3168–A0	..CAP, FRONT FORK ..TAPA DE HORQUILLA DELANTERA	1					
37	1UA–23153–00	..RING, SNAP ..ANILLO DE ENGANCHE	1					
38	2TW–F3111–A0	..BOLT, CAP ..PERNO DE TAPA	1					
39	35E–23114–00	..GASKET ..EMPAQUE	1					
40	4AN–F3192–W0	.BAND .BANDA	2					
41	5RM–F3191–00	.BOOT .FUNDA	2					
42	4AN–F3192–10	.BAND .BANDA	2					
43	5RM–F3340–00	.UNDER BRACKET COMP. .PLATINA INFERIOR COMPLETA	1					
44	4AN–F3346–10	.BOLT 1 .PERNO 1	4					
45	41B–F317E–00	STAY 1 SOPORTE 1	1					
46	41B–F317F–00	STAY 2 SOPORTE 2	1					

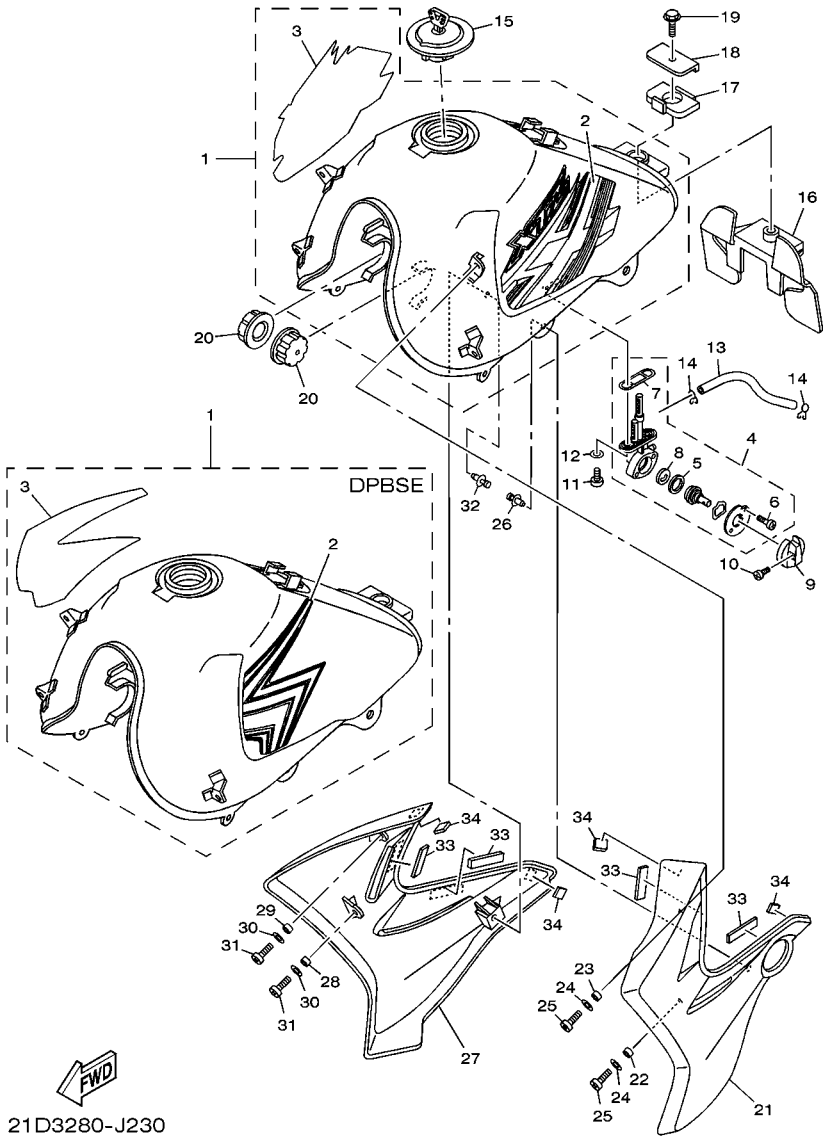

FIG. 23 FUEL TANK — DEPOSITO DE COMBUSTIBLE

REF. NO.	PART NO. CODIGO Nº	DESCRIPTION DESCRIPCION	41B4					REMARKS OBSERVACIONES
1	21D–F4100–30	FUEL TANK ASSY TANQUE COMBUSTIBLE COMPL.	1					HTR HTR
	21D–F4100–40	FUEL TANK ASSY TANQUE COMBUSTIBLE COMPL.	1					DPBSE DPBSE
	21D–F4100–50	FUEL TANK ASSY TANQUE COMBUSTIBLE COMPL.	1					YB YB
2	21D–F4244–30	.GRAPHIC, FUEL TANK 1 .CALCOMANIA DEPOSITO COMBUST.1	1					UR FOR HTR UR PARA HTR
	21D–F4244–40	.GRAPHIC, FUEL TANK 1 .CALCOMANIA DEPOSITO COMBUST.1	1					UR FOR DPBSE UR PARA DPBSE
	21D–F4244–50	.GRAPHIC, FUEL TANK 1 .CALCOMANIA DEPOSITO COMBUST.1	1					UR FOR YB UR PARA YB
3	21D–F4245–30	.GRAPHIC, FUEL TANK 2 .CALCOMANIA DEPOSITO COMBUST.2	1					UR FOR HTR UR PARA HTR
	21D–F4245–40	.GRAPHIC, FUEL TANK 2 .CALCOMANIA DEPOSITO COMBUST.2	1					UR FOR DPBSE UR PARA DPBSE
	21D–F4245–50	.GRAPHIC, FUEL TANK 2 .CALCOMANIA DEPOSITO COMBUST.2	1					UR FOR YB UR PARA YB
4	5RM–F4500–00	FUEL COCK ASSY 1 GRIFO DE COMBUSTIBLE 1	1					
5	5HH–F4534–00	.SEAL, COCK .SELLO DE GRIFO	1					
6	9850L–03008	.SCREW, PAN HEAD .TORNILLO DE CABEZA CON PLANA	2					
7	5HH–F4512–00	.O-RING .EMPAQUE	1					
8	5HH–F4523–00	.VALVE .VALVULA	1					
9	1YH–F4524–00	LEVER, COCK LLAVE DEL GRIFO	1					
10	90157–03122	SCREW, PAN HEAD TORNILLO CABEZA CONICA PLANA	1					
11	9890M–06016	SCREW, BIND TORNILLO DE LIGAR	2					
12	90202–06W01	WASHER, PLATE ARANDELA DE PLANA	2					
13	90445–10M50	HOSE (L170) TUBO (L170)	1					
14	90467–09W06	CLIP PRESILLA	2					
15	5VL–F4610–01	CAP ASSY TAPA COMPLETA	1					
16	5RM–F4182–00	DAMPER, LOCATING 2 AMORTIGUADOR DE MONTAJE 2	1					
17	5RM–F4183–00	DAMPER, LOCATING 3 AMORTIGUADOR DE MONTAJE 3	1					
18	5RM–F4186–00	WASHER, SPECIAL ARANDELA ESPECIAL	1					
19	9582M–06012	BOLT TORNILLO	1					
20	5HH–F4181–00	DAMPER, LOCATING 1 AMORTIGUADOR DE MONTAJE 1	2					
21	5RM–F137W–10	SCOOP, AIR 1 CUBIERTA DE GUIA DE AIRE 1	1					HTR HTR

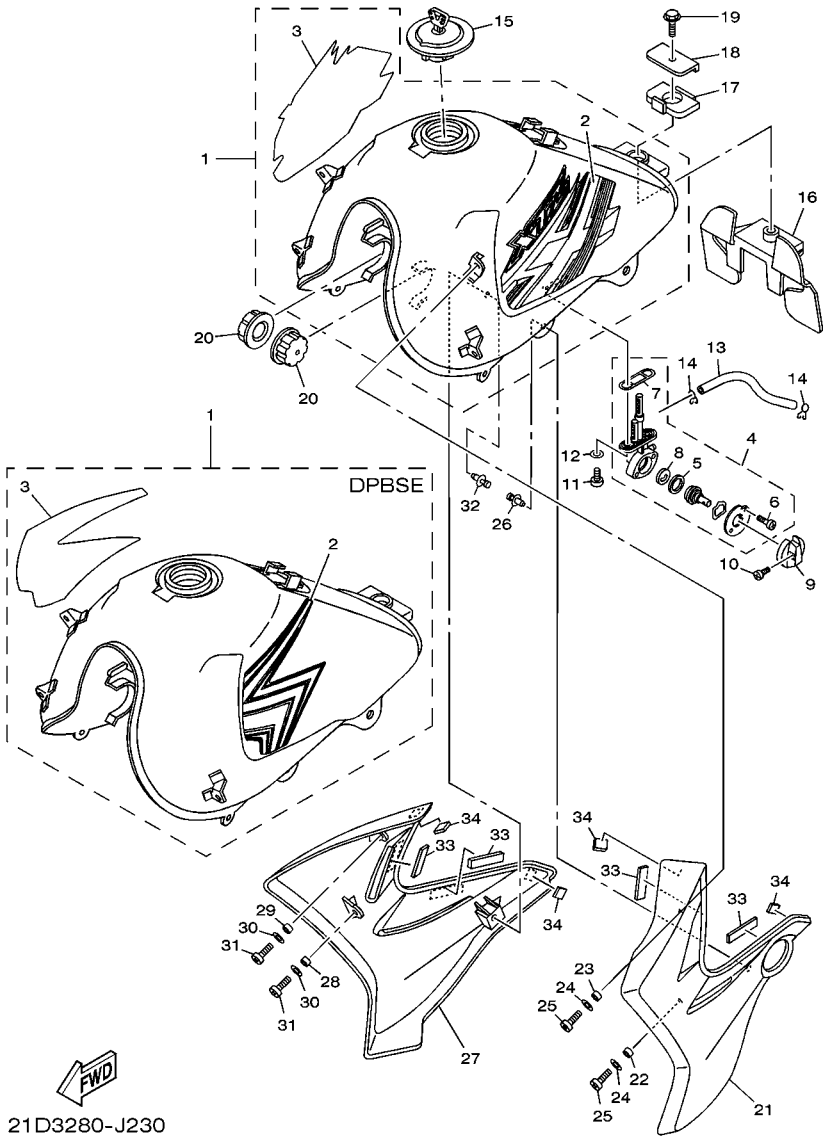

FIG. 23 FUEL TANK — DEPOSITO DE COMBUSTIBLE

REF. NO.	PART NO. CODIGO Nº	DESCRIPTION DESCRIPCION	41B4					REMARKS OBSERVACIONES
21	5RM–F137W–00	SCOOP, AIR 1 CUBIERTA DE GUIA DE AIRE 1	1					DPBSE DPBSE
	5RM–F137W–20	SCOOP, AIR 1 CUBIERTA DE GUIA DE AIRE 1	1					YB YB
22	90387–10W66	COLLAR ESPACIADOR	1					
23	90387–1001C	COLLAR ESPACIADOR	1					
24	90201–06804	WASHER, PLATE ARANDELA PLANA	2					
25	9890M–06012	SCREW, BIND TORNILLO DE LIGAR	2					
26	90269–07077	RIVET REMACHE	1					
27	5RM–F137X–10	SCOOP, AIR 2 CUBIERTA DE GUIA DE AIRE 2	1					HTR HTR
	5RM–F137X–00	SCOOP, AIR 2 CUBIERTA DE GUIA DE AIRE 2	1					DPBSE DPBSE
	5RM–F137X–20	SCOOP, AIR 2 CUBIERTA DE GUIA DE AIRE 2	1					YB YB
28	90387–10W66	COLLAR ESPACIADOR	1					
29	90387–1001C	COLLAR ESPACIADOR	1					
30	90201–06804	WASHER, PLATE ARANDELA PLANA	2					
31	9890M–06012	SCREW, BIND TORNILLO DE LIGAR	2					
32	90269–07077	RIVET REMACHE	1					
33	5RM–H3523–00	DAMPER AMORTIGUADOR	4					
34	5RM–H4753–00	DAMPER AMORTIGUADOR	4					

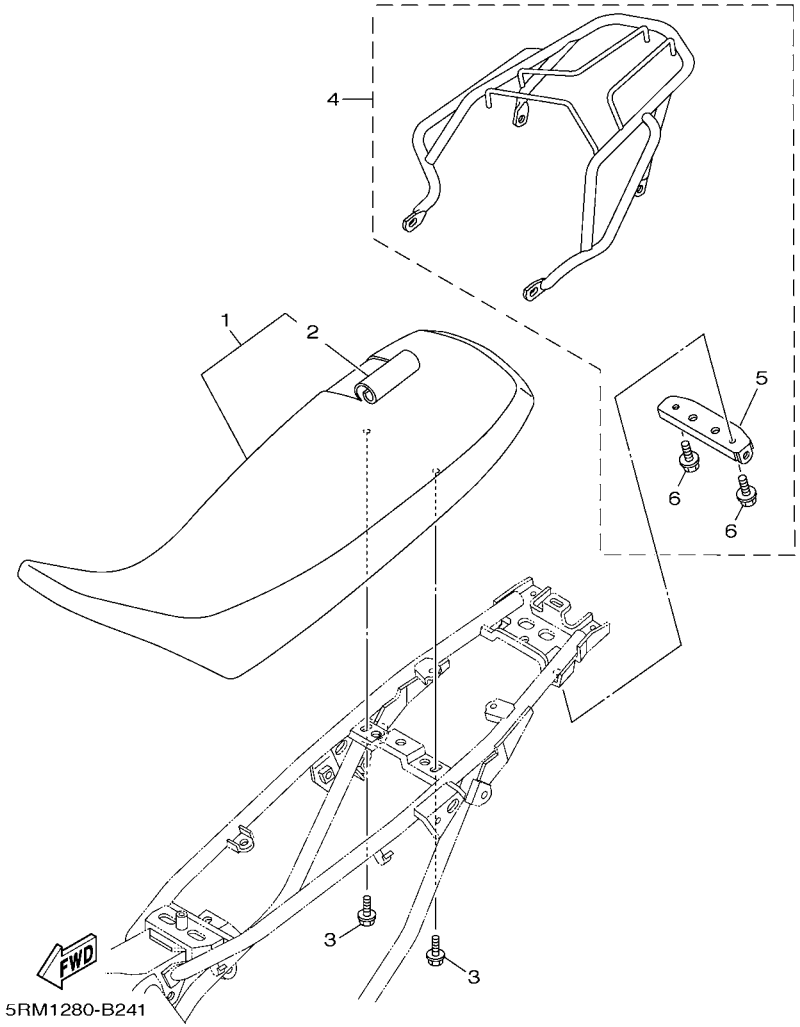

FIG. 24 SEAT ASIENTO

REF. NO.	PART NO. CODIGO Nº	DESCRIPTION DESCRIPCION	41B4					REMARKS OBSERVACIONES
1	5RM–F4730–00	DOUBLE SEAT ASSY SILLIN DOBLE COMPLETO	1					YAMAHA BLACK YAMAHA BLACK
2	5RM–F4731–00	.COVER, SEAT .FUNDA DE SILLIN	1					YAMAHA BLACK YAMAHA BLACK
3	9580M–06014	BOLT, FLANGE TORNILLO	2					
4	5RM–WF483–10	SUB CARRIER ASSY SUBPORTADOR COMPLETO	1					AP AP
5	5RM–F4832–10	.BRACKET, CARRIER 1 .SOPORTE DE PORTADOR 1	1					AP AP
6	9582M–08014	.BOLT .TORNILLO	2					AP AP

FIG. 25 FRONT WHEEL RUEDA DELANTERA

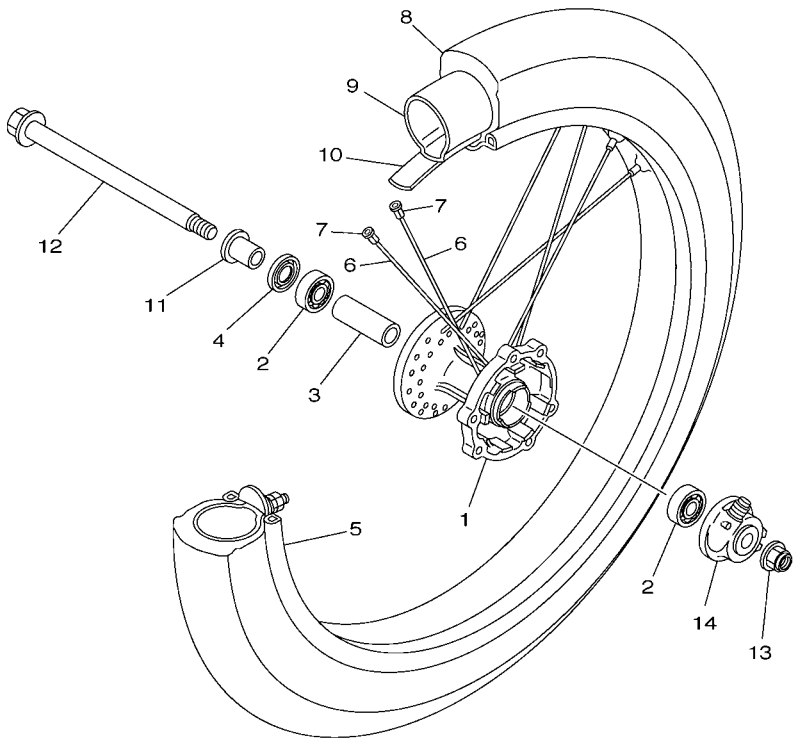

21D1280-H250

REF. NO.	PART NO. CODIGO Nº	DESCRIPTION DESCRIPCION	41B4					REMARKS OBSERVACIONES
1	4AN–F5111–10–35	HUB, FRONT MASA DELANTERA	1					SL SL
2	93306–252Y5	BEARING COJINETE	2					
3	90560–15290	SPACER SEPARADOR	1					
4	93106–20021	OIL SEAL SELLO ACEITE	1					
5	94416–21800	RIM (1.60-21) ARO (1.60-21)	1					
6	5RM–F5196–00	SPOKE, INNER 1 RAYOS INTERNO 1	36					
7	5HH–F5195–01	NIPPLE, SPOKE NIPLE	36					
8	94108–21802	TIRE (80/90-21M/C 485 DP MT90) NEUMATICO	1					PIRELLI PIRELLI
9	94227–21848	TUBE (80/100-21 TR4) TUBO (80/100-21 TR4)	1					PIRELLI PIRELLI
10	94325–21117	BAND,RIM (1.85-21) BANDA DE ARO (1.85-21)	1					YOKOHAMA YOKOHAMA
11	90387–15W36	COLLAR ESPACIADOR	1					
12	5RM–F5181–00	AXLE, WHEEL EJE DE LA RUEDA	1					
13	95607–14200	NUT, SELF-LOCKING TUERCA DE AUTO-CIERRE	1					
14	34X–25190–01	GEAR UNIT ASSY UNIDAD DE ENGRANAJE COMPLETA	1					

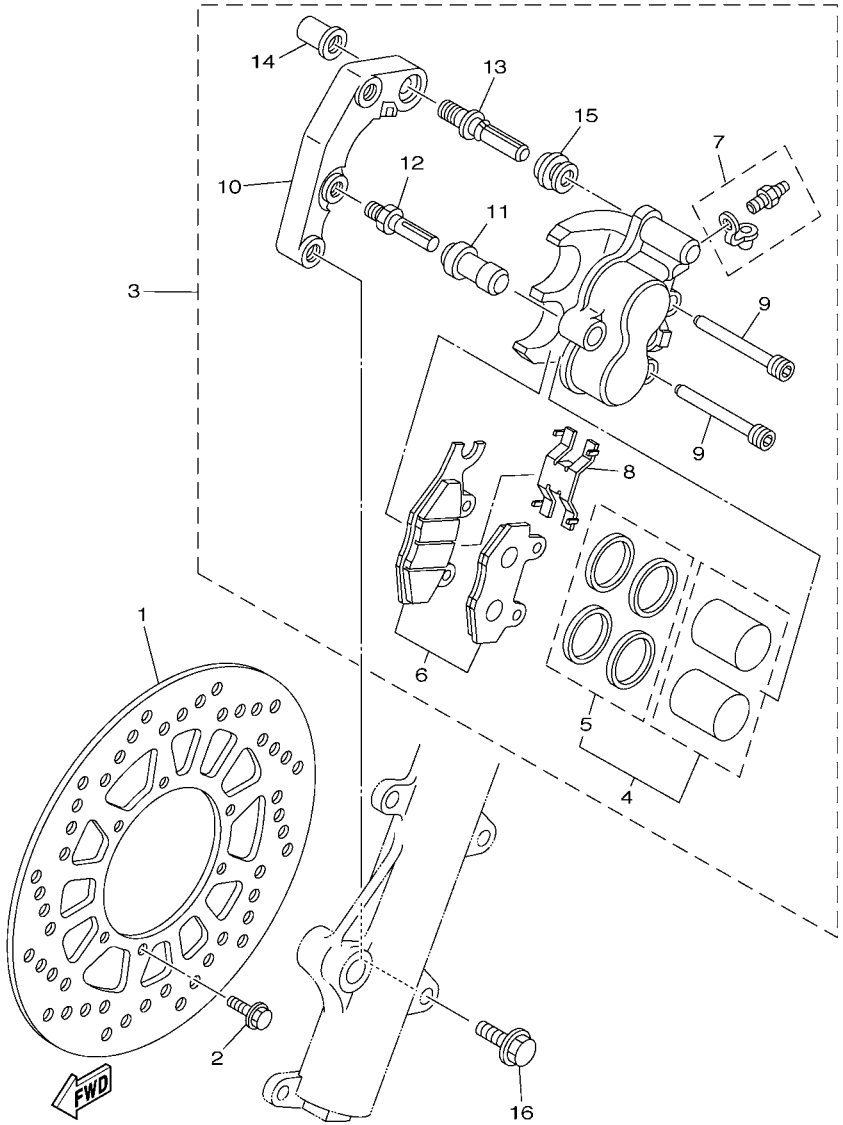

FIG. 26 FRONT BRAKE CALIPER CALIBRE FRENO DELANTERA

REF. NO.	PART NO. CODIGO Nº	DESCRIPTION DESCRIPCION	41B4					REMARKS OBSERVACIONES
1	5RM–F582T–00	DISC, BRAKE (LEFT) DISCO DE FRENO (IZQUIERDO)	1					
2	90105–06813	BOLT, FLANGE TORNILLO	6					
3	5RM–F580T–00	CALIPER ASSY (LEFT) CALIBRE COMPLETO (IZQUIERDO)	1					
4	5RM–W0057–00	.PISTON ASSY, CALIPER .PISTON COMPLETO PINZA	1					
5	5RM–W0047–00	..CALIPER SEAL KIT ..JUEGO DE RETENES DE PINZA	1					
6	5RM–W0045–10	.BRAKE PAD KIT .JUEGO DE COJIN DE FRENO	1					
7	5HH–W0048–00	.BLEED SCREW KIT .CJTO TORNILLO DE PURGA	1					
8	5HH–F5934–00	.SPRING, PAD .RESORTE, COJIN	1					
9	5HH–F5924–00	.PIN, PAD .PASADOR	2					
10	5RM–F5921–00	.BRACKET, SUPPORT .MENSULA DE SOPORTE	1					
11	5HH–F5937–00	.BOOT 2 .FUNDA	1					
12	5HH–F5926–00	.BOLT .PERNO	1					
13	5HH–F536G–00	.PIN .PASADOR	1					
14	5HH–F5961–00	.NUT .TUERCA	1					
15	5HH–F5917–00	.BOOT, CALIPER .FUNDA DE CALIBRE	1					
16	90105–10638	BOLT, FLANGE TORNILLO	2					

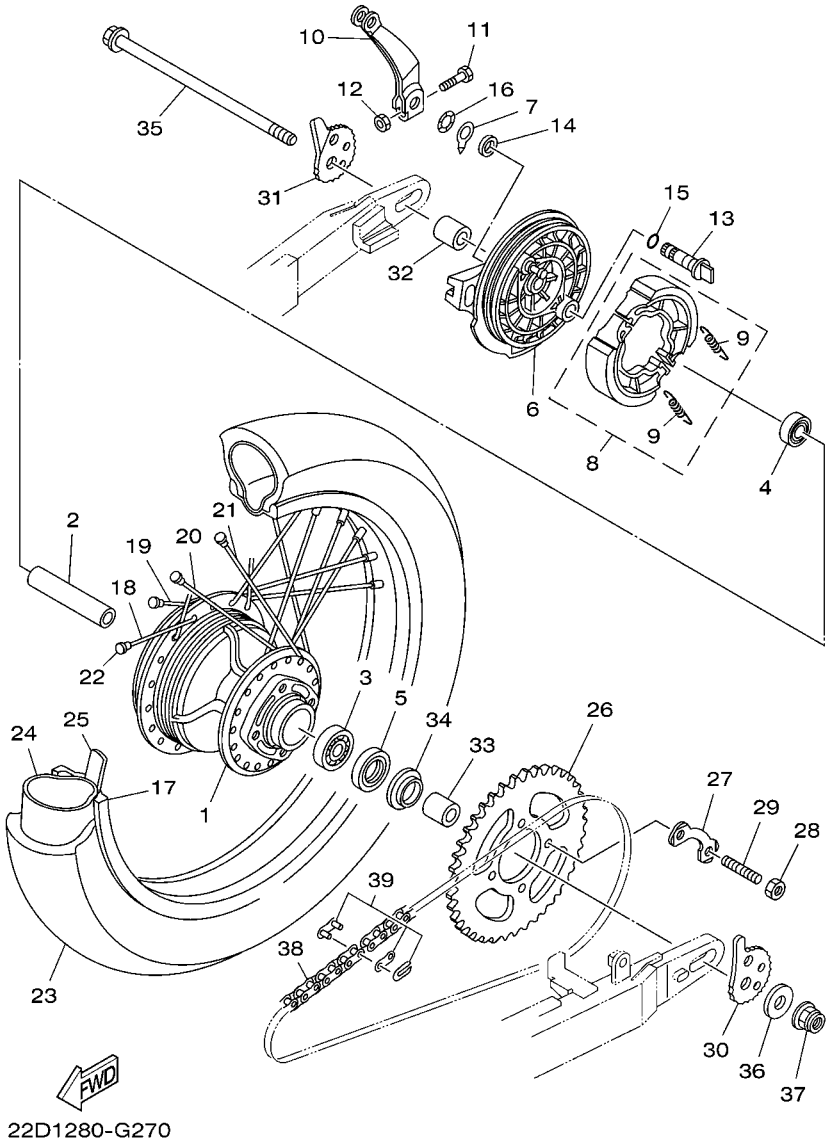

FIG. 27 REAR WHEEL — RUEDA TRASERA

REF. NO.	PART NO. CODIGO Nº	DESCRIPTION DESCRIPCION	41B4					REMARKS OBSERVACIONES
1	5RM–F5311–00–35	HUB, REAR MASA TRASERA	1					SL SL
2	90560–15313	SPACER SEPARADOR	1					
3	93306–302X6	BEARING COJINETE	1					
4	93306–252YS	BEARING COJINETE	1					
5	93106–26005	OIL SEAL SELLO ACEITE	1					
6	5RM–F5321–00–35	PLATE, BRAKE SHOE PLACA DE ZAPATA DE FRENO	1					SL SL
7	5HH–F533A–00	PLATE, INDICATOR PLACA INDICADOR	1					
8	5HH–F5330–00	BRAKE SHOE COMP. ZAPATA DE FRENO COMPLETA	1					
9	90506–15260	.SPRING, TENSION .RESORTE DE TENSION	2					
10	5RM–F5355–00	LEVER, CAMSHAFT PALANCA DE ARBOL DE LEVAS	1					
11	90101–06W00	BOLT TORNILLO	1					
12	9530M–06600	NUT TUERCA	1					
13	5RM–F5351–00	CAMSHAFT ARBOL DE LEVAS	1					
14	93109–14021	OIL SEAL SELLO ACEITE	1					
15	93210–14104	O-RING ANILLO O	1					
16	90206–14093	WASHER, WAVE ARANDELA ONDULADA	1					
17	94421–18801	RIM (2.15-18) ARO (2.15-18)	1					
18	5RM–F5396–00	SPOKE, INNER 2 RAYOS INTERNO 2	9					
19	5RM–F5397–00	SPOKE, OUTER 2 RAYOS EXTERNO 2	9					
20	5RM–F5391–00	SPOKE SET, INNER 1 JUEGO RAYOS INTERNO 1	9					
21	5RM–F5392–00	SPOKE SET, OUTER 1 JUEGO RAYOS EXTERNO 1	9					
22	5HH–F5195–01	NIPPLE, SPOKE NIPLE	36					
23	94111–18800	TIRE (110/80-18 585 DP. HT90) NEUMATICO	1					PIRELLI PIRELLI
24	94211–18850	TUBE (100/100-18) TUBO (100/100-18)	1					PIRELLI PIRELLI
25	94325–18801	BAND,RIM (2.15-18) BANDA DE ARO (2.15-18)	1					PIRELLI PIRELLI
26	5RM–F5448–20	SPROCKET, DRIVEN (48T) CORONA (48D)	1					
27	5RM–F5412–00	WASHER ARANDELA	2					

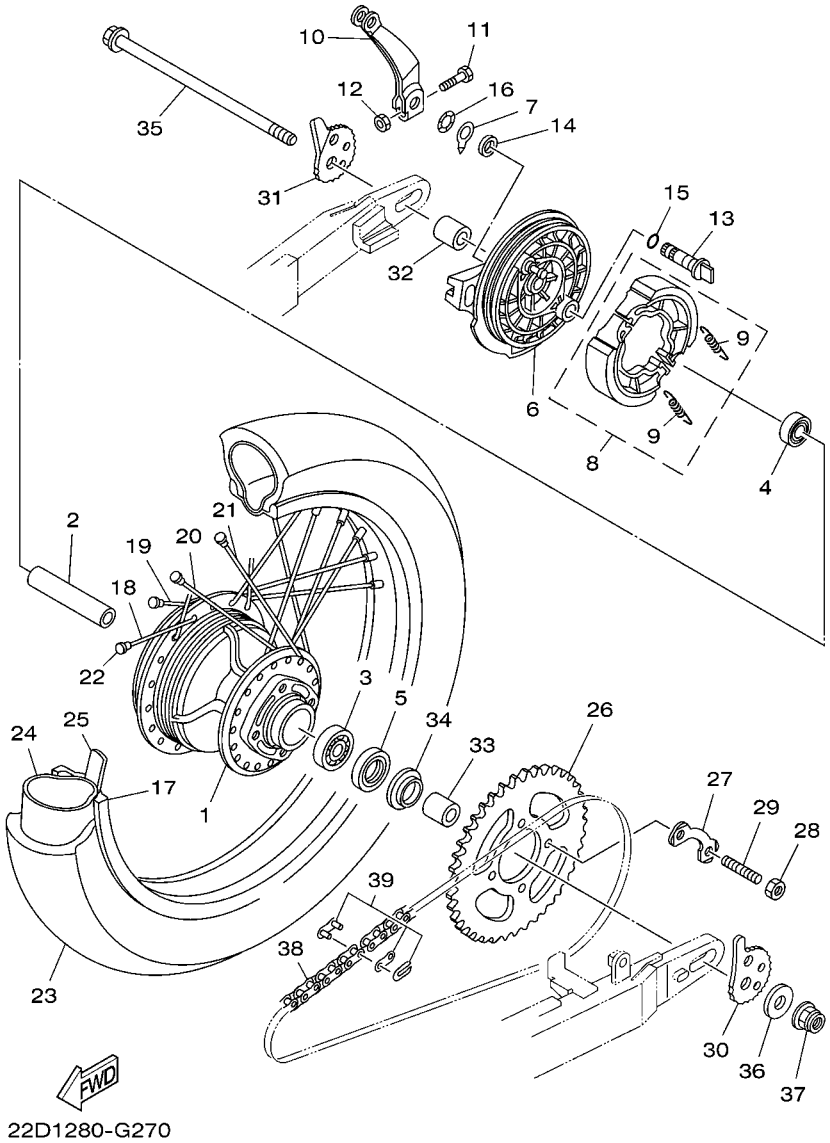

FIG. 27 REAR WHEEL RUEDA TRASERA

REF. NO.	PART NO. CODIGO Nº	DESCRIPTION DESCRIPCION	41B4					REMARKS OBSERVACIONES
28	90170–10219	NUT TUERCA	4					
29	90116–10390	BOLT, STUD ESPARRAGO	4					
30	5RM–F5388–00	PULLER, CHAIN 1 TIRADOR DE CADENA 1	1					
31	5RM–F5389–00	PULLER, CHAIN 2 TIRADOR DE CADENA 2	1					
32	90387–15802	COLLAR ESPACIADOR	1					
33	90387–15802	COLLAR ESPACIADOR	1					
34	5L9–F5367–00	COVER, HUB DUST CUBIERTA DE MASA PARA POLVO	1					
35	5RM–F5381–01	AXLE, WHEEL EJE DE RUEDA	1					
36	90201–14W70	WASHER, PLATE ARANDELA PLANA	1					
37	95607–14200	NUT, SELF-LOCKING TUERCA DE AUTO-CIERRE	1					
38	94581–97121	CHAIN (DID428HD 121LL) CADENA (DID428HD 121LL)	1					
39	94681–97001	.JOINT.CHAIN (DID428HD-RJ) .CONECTOR DECADENA(DID428HD-RJ)	1					

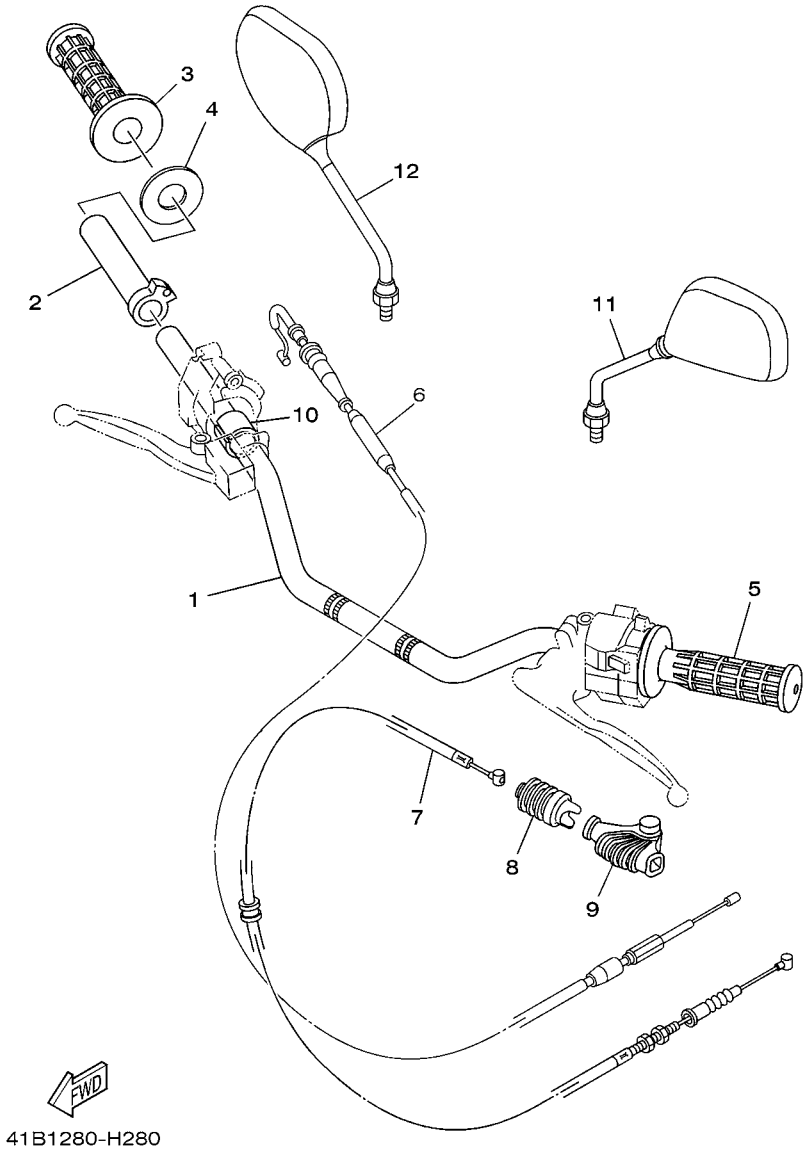

FIG. 28 STEERING HANDLE & CABLE MANILLAR & CABLE

REF. NO.	PART NO. CODIGO Nº	DESCRIPTION DESCRIPCION	41B4					REMARKS OBSERVACIONES
1	5RM–F6111–00	HANDLEBAR MANUBRIO	1					
2	5L9–F6243–00	TUBE, THROTTLE GUIDE TUBO DE GUIA DE OBTURADOR	1					
3	4VW–F6242–00	GRIP (RIGHT) EMPUNADURA (MD)	1					
4	5RM–F6249–00	RING, LEAF ANILLO DE FLEJE	1					
5	4VW–F6241–00	GRIP EMPUNADURA	1					
6	5RM–F6311–00	CABLE, THROTTLE 1 CABLE DE ACELERADOR 1	1					
7	21D–26335–00	CABLE, CLUTCH CABLE DE EMBRAGUE	1					
8	1S4–F6342–00	BOOT, CABLE FUNDA DE CABLE	1					
9	5RM–F6372–00	COVER, HANDLE LEVER 1 CUBIERTA DE PALANCA DE MANUB 1	1					
10	90387–227H7	COLLAR ESPACIADOR	1					
11	5HH–F6280–00	REAR VIEW MIRROR ASSY (LEFT) ESPEJO COMPLETO (IZQUIERDO)	1					
12	5HH–F6290–00	REAR VIEW MIRROR ASSY (RIGHT) ESPEJO COMPLETO (DERECHO)	1					

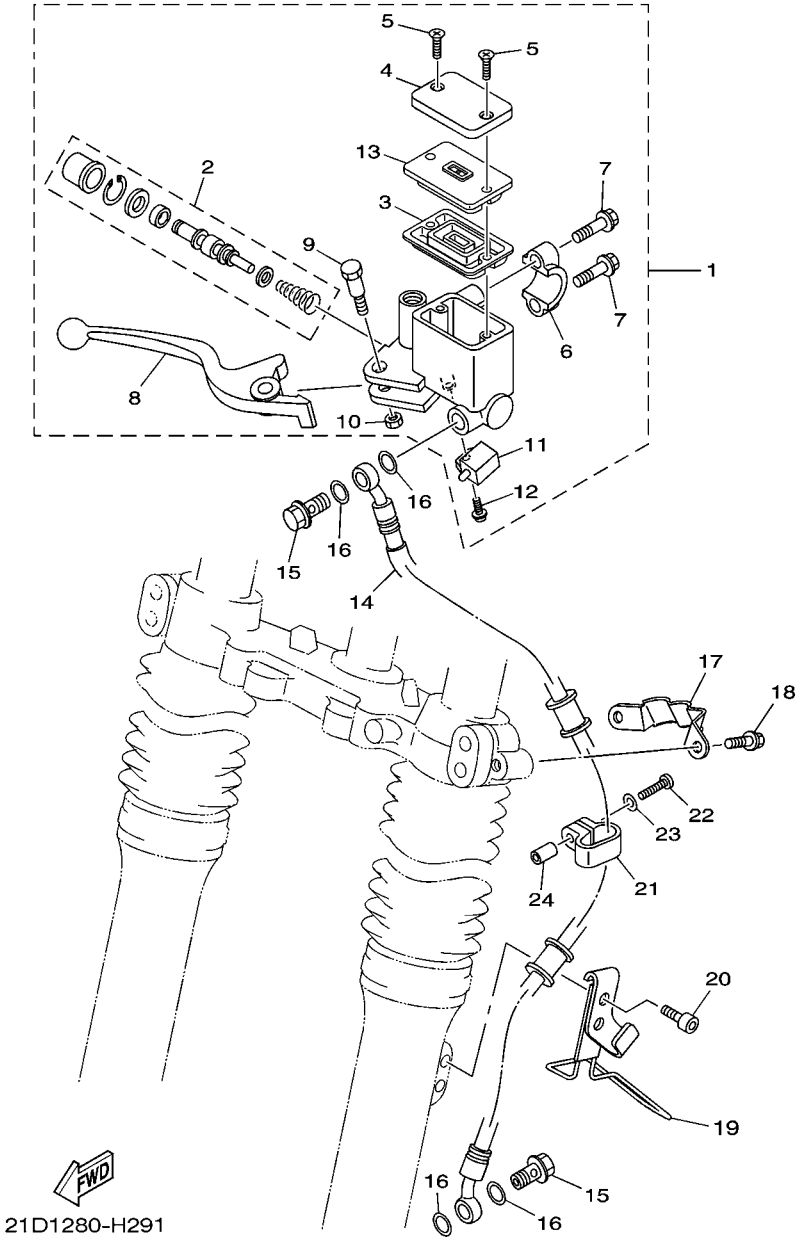

FIG. 29 FRONT MASTER CYLINDER CILINDRO MAESTRO DELANTERO

REF. NO.	PART NO. CODIGO Nº	DESCRIPTION DESCRIPCION	41B4					REMARKS OBSERVACIONES
1	5RM–F583T–10	MASTER CYLINDER ASSY CILINDRO MAESTRO COMPLETO	1					
2	5RM–W0041–00	.CYLINDER KIT, MASTER .JUEGO DE CILINDRO MAESTRO	1					
3	5HH–F5854–00	.DIAPHRAGM, RESERVOIR .EMPAQUE,DIAFRAGMA	1					
4	5LW–F5852–00	.CAP, RESERVOIR .TAPA DE TANQUE DE RESERVA	1					
5	9870M–04012	.SCREW, FLAT HEAD .TORNILLO DE CABEZA PLANA	2					
6	5HH–F5867–00	.BRACKET, MASTER CYLINDER .SOPORTE DE CILINDRO MAESTRO	1					
7	5HH–F6332–00	.BOLT, FLANGE .TORNILLO	2					
8	5RM–H3922–00	.LEVER 2 .PALANCA 2	1					
9	90109–06577	.BOLT .PERNO	1					
10	9560M–06100	.NUT, U .TUERCA AUTOBLOCANTE	1					
11	5HH–H3980–10	.FRONT STOP SWITCH ASSY .INTERRUP. DE PARADA DELANTERO	1					
12	9760L–04312	.SCREW, PAN HEAD .TORNILLO CAB CON PLANA C/ARAN	1					
13	5LW–F585B–00	.PLATE, DIAPHRAGM .PLACA, DIAFRAGMA	1					
14	5RM–F5872–10	HOSE, BRAKE 1 MANGUERA DE FRENO 1	1					
15	90401–10816	BOLT, UNION PERNO DE UNION	2					
16	90201–10886	WASHER, PLATE ARANDELA PLANA	4					
17	5RM–F5875–00	HOLDER, BRAKE HOSE 1 SOPORTE DE MANGUERA FRENO 1	1					
18	9502M–06010	BOLT, FLANGE PERNO, DE BRIDA	2					
19	21D–F3318–00	HOLDER, CABLE 1 SOSTEN DE CABLE 1	1					
20	9131M–06010	BOLT PERNO	2					
21	5RM–F3467–00	CLAMP GRAMPA	1					
22	9851M–04018	SCREW, PAN HEAD TORNILLO DE CABEZA CON PLANA	1					
23	9290M–04600	WASHER ARANDELA	1					
24	90445–05807	HOSE TUBO	1					

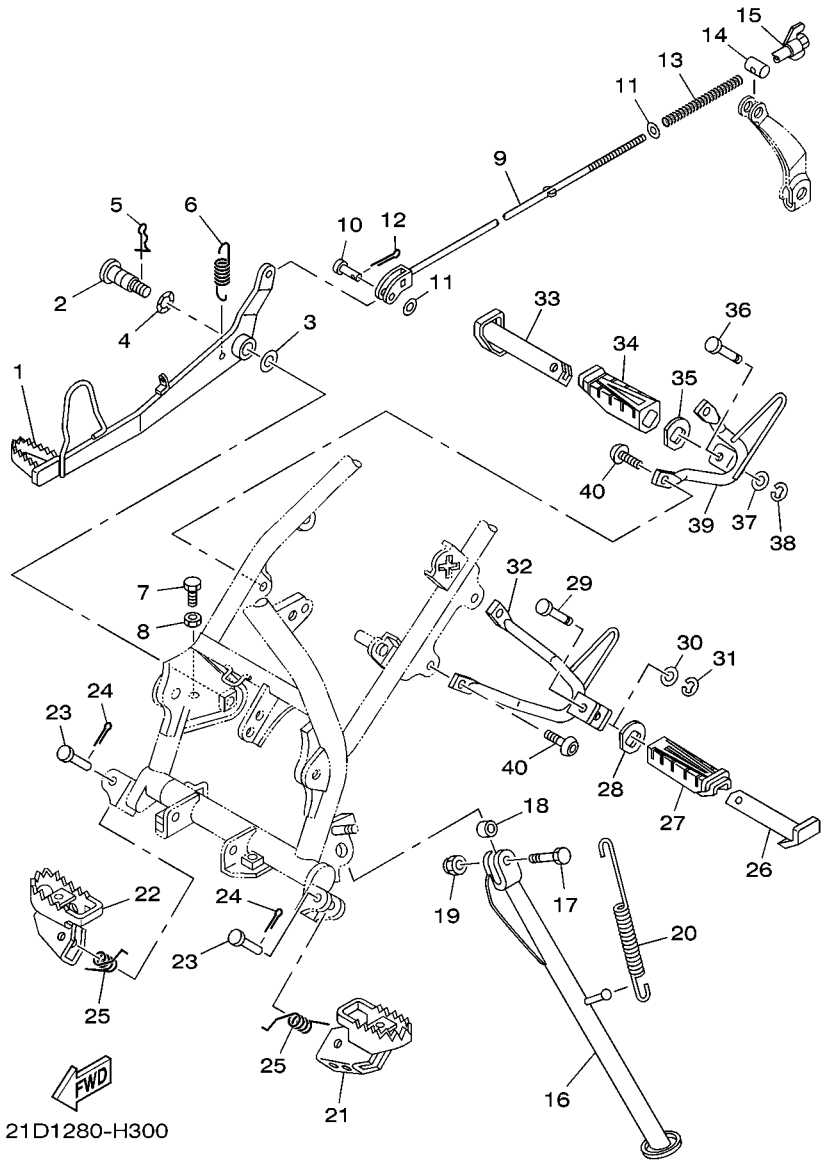

FIG. 30 STAND & FOOTREST — SOPORTE & APOYAPIE

REF. NO.	PART NO. CODIGO Nº	DESCRIPTION DESCRIPCION	41B4					REMARKS OBSERVACIONES
1	5RM–F7211–00	PEDAL, BRAKE PEDAL DE FRENO	1					
2	5RM–F7261–00	SHAFT EJE	1					
3	90201–10135	WASHER, PLATE ARANDELA PLANA	1					
4	90206–14001	WASHER, WAVE ARANDELA ONDULADA	1					
5	90468–20196	CLIP PRESILLA	1					
6	90506–23801	SPRING, TENSION RESORTE DE TENSION	1					
7	9700M–06016	BOLT PERNO	1					
8	9530M–06700	NUT TUERCA	1					
9	5RM–F7231–00	ROD, BRAKE VARILLA DE FRENO	1					
10	91701–06020	PIN PASADOR DE ABRAZADERA	1					
11	9290L–06200	WASHER ARANDELA	2					
12	91401–20012	PIN, COTTER CHAVETA	1					
13	90501–10802	SPRING, COMPRESSION RESORTE DE COMPRESION	1					
14	90249–12800	PIN PASADOR	1					
15	90175–06020	NUT, WING TUERCA MARIPOSA	1					
16	21D–F7311–00	STAND, SIDE PUNTAL LATERAL	1					
17	90101–10805	BOLT TORNILLO	1					
18	90387–10003	COLLAR ESPACIADOR	1					
19	90185–10037	NUT, SELF-LOCKING TUERCA AUTOBLOCANTE	1					
20	90506–35474	SPRING, TENSION RESORTE DE TENSION	1					
21	4VW–F7411–00	FOOTREST 1 APOYAPIE 1	1					
22	5RM–F7421–00	FOOTREST 2 APOYAPIE 2	1					
23	90240–08W04	PIN, CLEVIS PASADOR CON HOYO	2					
24	91401–25015	PIN, COTTER CHAVETA	2					
25	90508–20W07	SPRING, TORSION RESORTE DE TORSION	2					
26	5HH–F7431–00	FOOTREST, REAR 1 APOYAPIE POSTERIOR 1	1					
27	5HH–F7433–00	COVER, REAR FOOTREST 1 CUBIERTA APOYAPIE TRASERO 1	1					

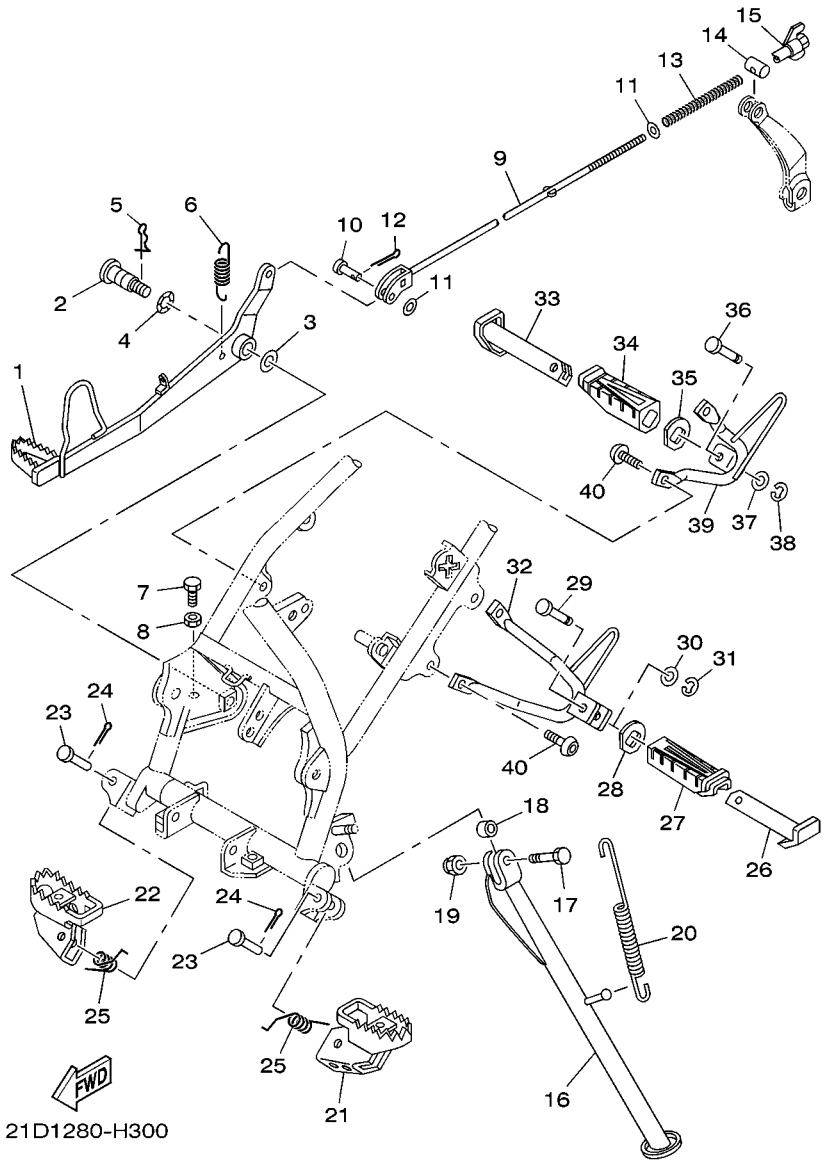

FIG. 30 STAND & FOOTREST SOPORTE & APOYAPIE

REF. NO.	PART NO. CODIGO Nº	DESCRIPTION DESCRIPCION	41B4					REMARKS OBSERVACIONES
28	5HH–F7445–01	PLATE 1 PLACE 1	1					
29	90249–06220	PIN PASADOR	1					
30	9290L–06200	WASHER ARANDELA	1					
31	99001–05600	CIRCLIP PRESILLA REDONDA	1					
32	5RM–F7432–10–33	BRACKET 1 SOPORTE 1	1					YB YB
33	5HH–F7441–00	FOOTREST, REAR 2 APOYAPIE POSTERIOR 2	1					
34	5HH–F7444–00	COVER, REAR FOOTREST CUBIERTA APOYAPIE TRASERO	1					
35	5HH–F7445–01	PLATE 1 PLACE 1	1					
36	90249–06220	PIN PASADOR	1					
37	9290L–06200	WASHER ARANDELA	1					
38	99001–05600	CIRCLIP PRESILLA REDONDA	1					
39	5RM–F7442–10–33	BRACKET 2 SOPORTE 2	1					YB YB
40	92017–08020	BOLT, BUTTON HEAD PERNO	4					

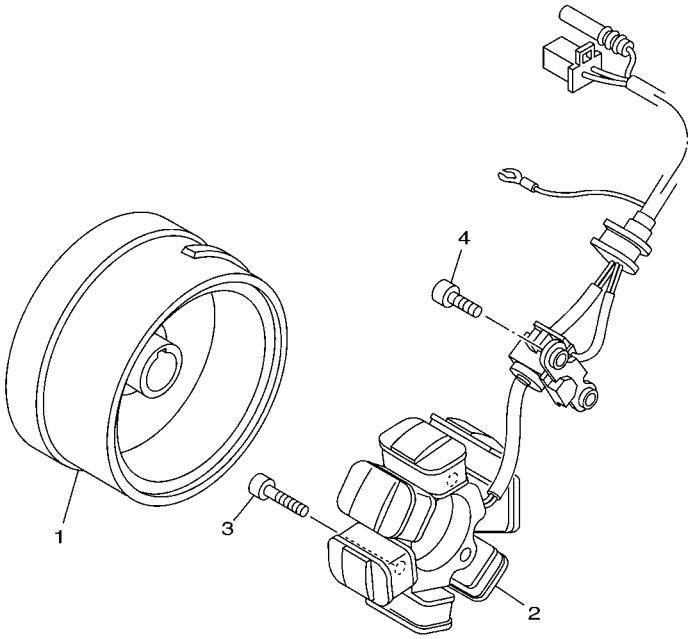

18D1280-H340

FIG. 31 GENERATOR GENERADOR

REF. NO.	PART NO. CODIGO Nº	DESCRIPTION DESCRIPCION	41B4					REMARKS OBSERVACIONES
1	5HH–H1450–30	ROTOR ASSY ROTOR COMPLETO	1					
2	5RM–H1410–00	STATOR ASSY ESTATOR COMPLETO	1					
3	9131M–06020	BOLT PERNO	3					
4	9131M–06014	BOLT PERNO	2					

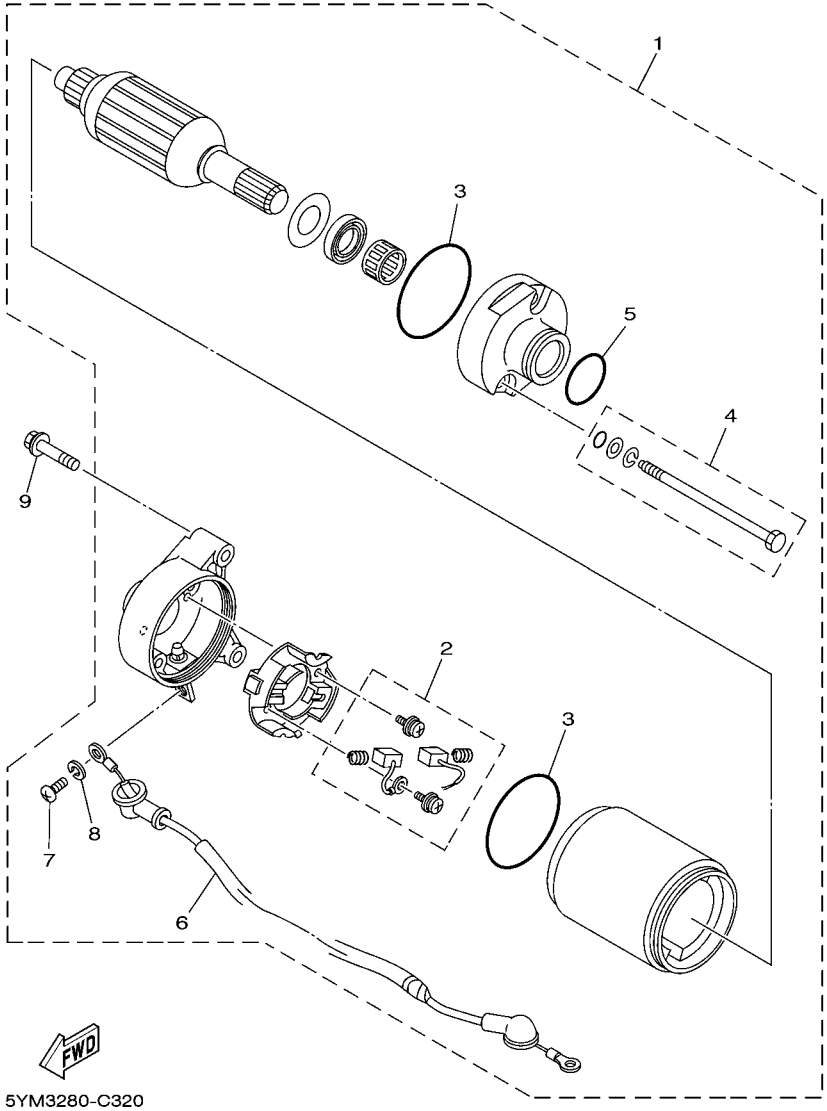

FIG. 32 STARTING MOTOR MOTOR DE ARRANQUE

REF. NO.	PART NO. CODIGO Nº	DESCRIPTION DESCRIPCION	41B4					REMARKS OBSERVACIONES
1	5HH–H1800–01	STARTING MOTOR ASSY MOTOR DE ARRANQUE COMPLETO	1					
2	7CP–H1801–00	.BRUSH SET .JUEGO DE ESCOBILLA	1					
3	93210–55669	.O-RING .ANILLO O	2					
4	4FP–H1828–01	.BOLT 2 .TORNILLO DE EMPUJE 2	2					
5	4FP–H182L–00	.O-RING 1 .ANILLO EN O	1					
6	5HH–H183G–01	.CORD COMP. .CABLE DEL MOTOR COMPL.	1					
7	98507–05008	.SCREW, PAN HEAD .TORNILLO DE CABEZA CON PLANA	1					
8	92907–05100	.WASHER, SPRING .ARANDELA	1					
9	9502M–06025	BOLT, FLANGE PERNO, DE BRIDA	2					

FIG. 33 FLASHER LIGHT LUZ DE DESTELLADOR

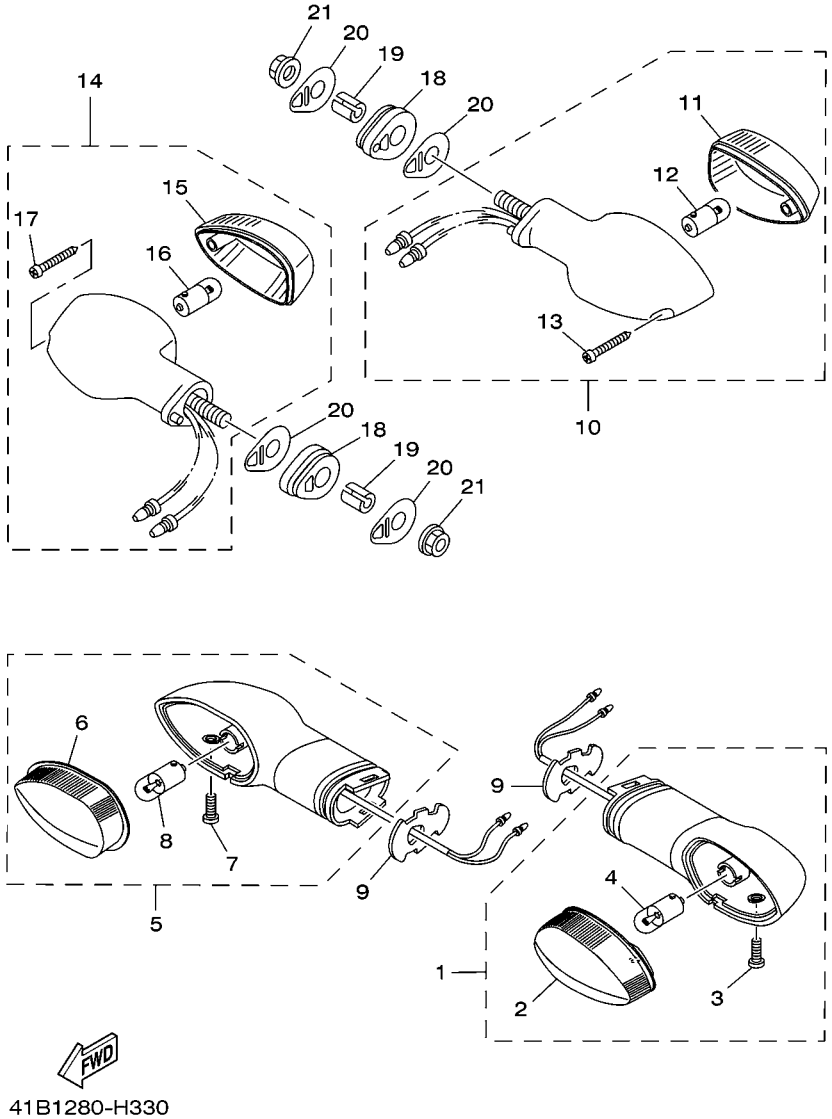

REF. NO.	PART NO. CODIGO Nº	DESCRIPTION DESCRIPCION	41B4					REMARKS OBSERVACIONES
1	5D1–H3310–00	FRONT FLASHER LIGHT ASSY 1 DESTELLADOR DE LUZ DELANT.	1					
2	3D9–H333A–00	.LENS COMP 1 .LENTES COMPLETO 1	1					
3	3D9–H3333–10	.SCREW, LENS FITTING .TORNILLO ACCESORIO DE LENTE	1					
4	3D9–H3311–10	.BULB, FLASHER (12V-10W) .BOMBILLA (12V-10W)	1					
5	5D1–H3320–00	FRONT FLASHER LIGHT ASSY 2 DESTELLADOR DE LUZ DELANT.	1					
6	3D9–H334A–00	.LENS COMP 2 .LENTES COMPLETO 2	1					
7	3D9–H3333–10	.SCREW, LENS FITTING .TORNILLO ACCESORIO DE LENTE	1					
8	3D9–H3311–10	.BULB, FLASHER (12V-10W) .BOMBILLA (12V-10W)	1					
9	3D9–H3318–10	STAY, FLASHER 1 SOPORTE DE DESTELLADOR 1	2					
10	4B4–H3330–01	REAR FLASHER LIGHT ASSY 1 DESTELLADOR DE LUZ TRAS.COMPL.	1					
11	1S4–H3312–00	.LENS, FLASHER .LENTE DE DESTELLADOR	1					
12	42K–H3311–00	.BULB, FLASHER (12V/10W) .BOMBILLA, DESTELLADOR(12V/10W)	1					
13	9770M–06025	.SCREW, TAPPING .TORNILLO ROSCA HEMBRA	1					
14	4B4–H3340–01	REAR FLASHER LIGHT ASSY 2 DESTELLADOR DE LUZ TRAS.COMPL.	1					
15	1S4–H3312–00	.LENS, FLASHER .LENTE DE DESTELLADOR	1					
16	42K–H3311–00	.BULB, FLASHER (12V/10W) .BOMBILLA, DESTELLADOR(12V/10W)	1					
17	9770M–06025	.SCREW, TAPPING .TORNILLO ROSCA HEMBRA	1					
18	5HH–H3321–01	DAMPER, FLASHER 1 AMORTIGUADOR DE DESTELLADOR 1	2					
19	5RM–H3316–00	COLLAR, FLASHER 1 ESPACIADOR DE DESTELLADOR 1	2					
20	5HH–H3359–02	WASHER, SPECIAL ARANDELA ESPECIAL	4					
21	9570M–08500	NUT, FLANGE TUERCA DE BRIDA	2					

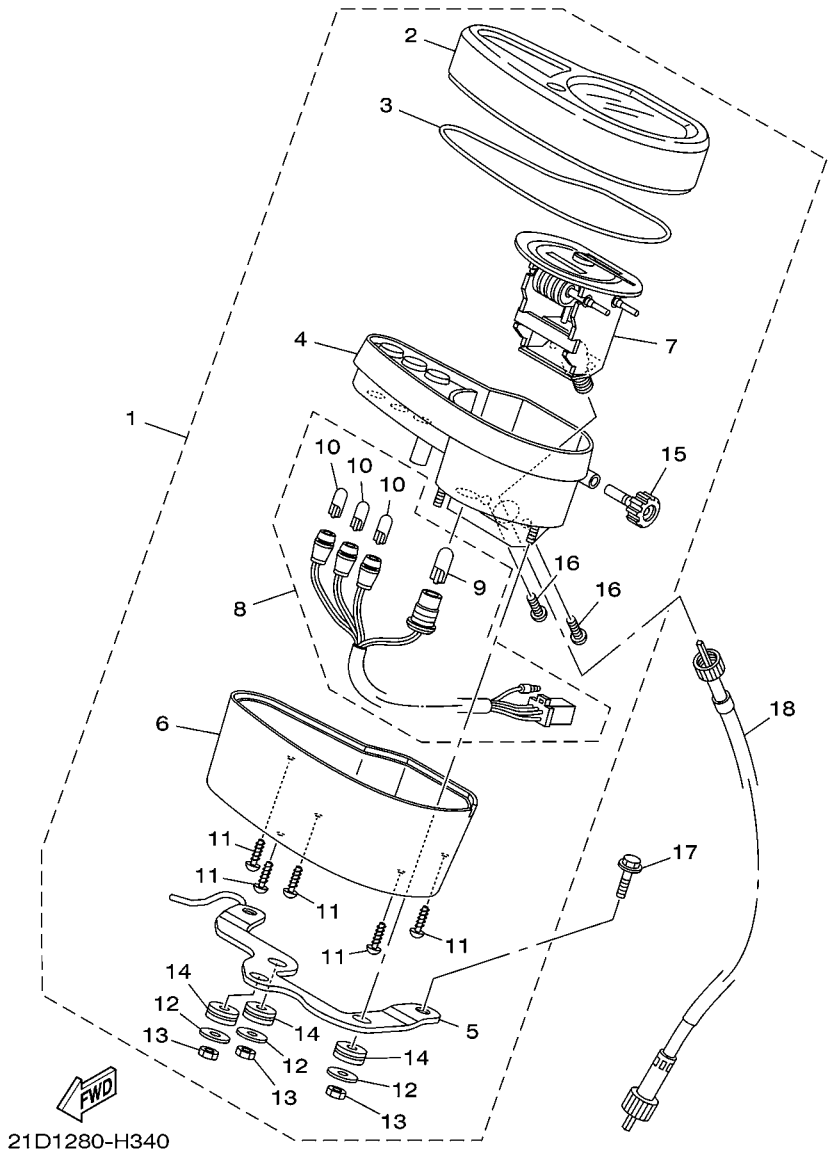

FIG. 34 METER MEDIDOR

REF. NO.	PART NO. CODIGO Nº	DESCRIPTION DESCRIPCION	41B4					REMARKS OBSERVACIONES
1	21D–H3500–00	METER ASSY METRO COMPLETO	1					
2	5RM–H3559–00	.COVER, METER .CUBIERTA DE MEDIDOR	1					
3	5RM–H357K–00	.PACKING,METER .JUNTA, MEDIDOR	1					
4	5RM–H353R–00	.CASE, METER LOWER .CAJA DE MEDIDOR INFERIOR	1					
5	21D–H350E–00	.BRACKET .SOPORTE	1					
6	5RM–H353H–00	.CASE, UNDER .CAJA INFERIOR	1					
7	5RM–H3570–10	.SPEEDOMETER ASSY .VELOCIMETRO COMPLETO	1					
8	5RM–H350W–00	.SOCKET CORD ASSY .ENCASTRE DE CABLE COMPLETO	1					
9	35N–H3531–00	..BULB PILOT (12V-3.4W) ..AMPOLLETA DE PILOTO (12V-3.4W)	1					
10	42X–83517–00	..BULB (12V-3W) ..AMPOLLETA (12V-3W)	3					
11	97704–04012	.SCREW, TAPPING .TORNILLO ROSCA HEMBRA	5					
12	5HH–H3524–00	.WASHER, SPECIAL .ARANDELA ESPECIAL	3					
13	5HH–H366W–00	.NUT .TUERCA	3					
14	5HH–H3634–00	.GROMMET .ARANDELA DE REFUERZO	3					
15	5RM–H3578–00	.KNOB, TRIP METER .PERILLA MEDIDOR DE RECORRIDO	1					
16	97704–04008	.SCREW, TAPPING .TORNILLO ROSCA HEMBRA	2					
17	9502L–06020	BOLT, FLANGE PERNO, DE BRIDA	2					
18	5RM–H3550–00	SPEEDOMETER CABLE ASSY CABLE DE VELOCIMETRO COMPLETO	1					

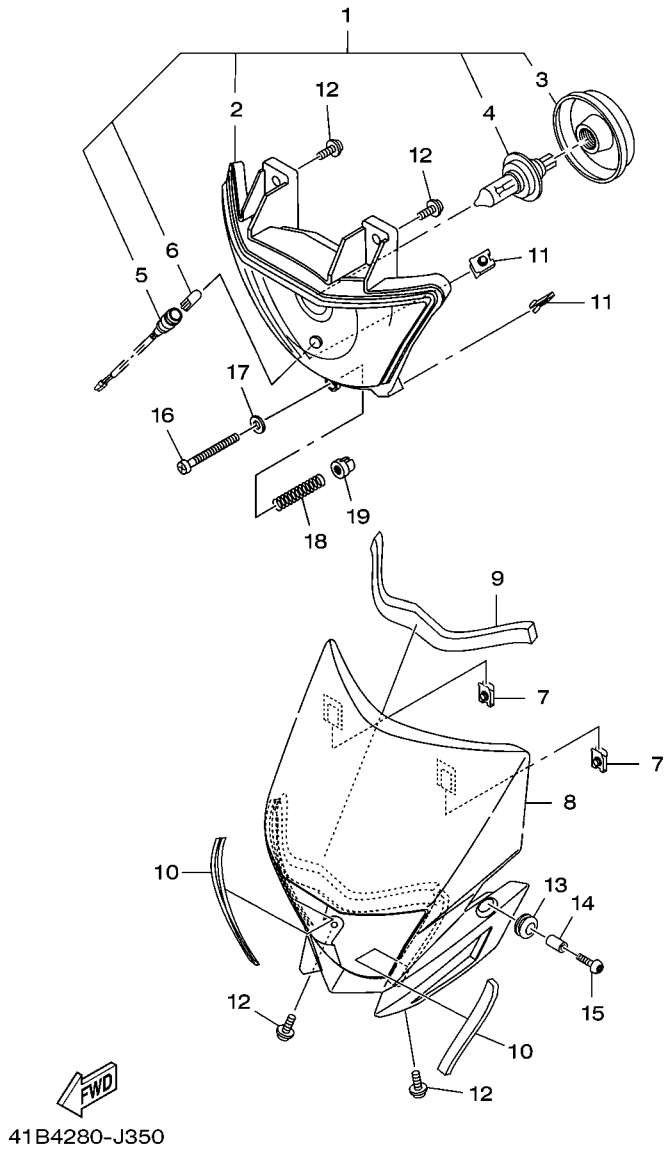

FIG. 35 HEADLIGHT FARO DELANTERO

REF. NO.	PART NO. CODIGO Nº	DESCRIPTION DESCRIPCION	41B4					REMARKS OBSERVACIONES
1	21D–H4310–10	HEADLIGHT UNIT ASSY UNIDAD DE FARO DELANTERO COMPL	1					
2	21D–H4320–10	.LENS ASSY .LENTE COMPLETO	1					
3	18D–H4397–00	..COVER, SOCKET ..CUBIERTA DE ENCASTRE	1					
4	4AN–H4314–00	.BULB, HEADLIGHT (12V-35/35W) .BOMBILLA (12V-35/35W)	1					
5	21D–H4312–00	.CORD ASSY .CABLE COMPLETA	1					
6	35N–H3531–00	.BULB PILOT (12V-3.4W) .AMPOLLETA DE PILOTO (12V-3.4W)	1					
7	90183–05008	NUT, SPRING TUERCA DE RESORTE	2					
8	21D–H4311–00	BODY, HEADLIGHT CUERPO DE FARO DELANTERO	1					HTR HTR
	21D–H4311–10	BODY, HEADLIGHT CUERPO DE FARO DELANTERO	1					DPBSE DPBSE
	21D–H4311–20	BODY, HEADLIGHT CUERPO DE FARO DELANTERO	1					YB YB
9	21D–F834E–00	DAMPER 3 AMORTIGUADOR 1	1					
10	21D–F834F–00	DAMPER AMORTIGUADOR	2					
11	90183–05008	NUT, SPRING TUERCA DE RESORTE	2					
12	90159–05163	SCREW, WITH WASHER TORNILLO CON VALONA	4					
13	90480–14003	GROMMET TAPON	2					
14	90387–06113	COLLAR ESPACIADOR	2					
15	90149–06302	SCREW TORNILLO DE REGLAJE	2					
16	4LR–H433E–00	SCREW, ADJUSTING TORNILLO DE AJUSTE	1					
17	4VW–H4344–00	WASHER, PLAIN ARANDELA COMUN	1					
18	4LR–H4332–10	SPRING, SCREW RESORTE DE TORNILLO	1					
19	4B4–84334–00	NUT, ADJUSTING TUERCA DE AJUSTE	1					

FIG. 36 TAILLIGHT — LUZ DE COLA

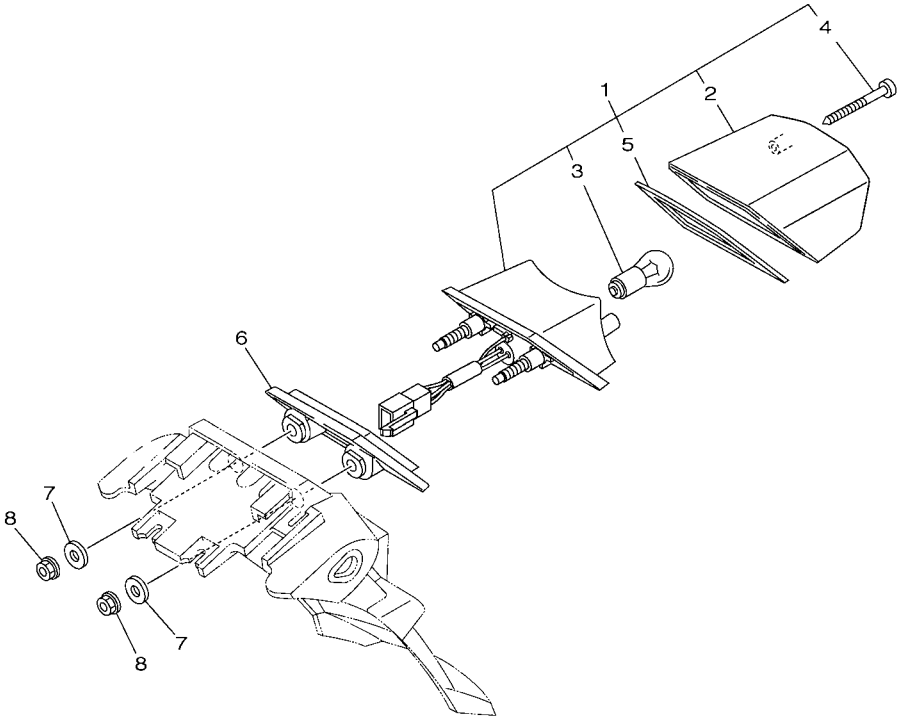

REF. NO.	PART NO. CODIGO Nº	DESCRIPTION DESCRIPCION	41B4					REMARKS OBSERVACIONES
1	21D–H4710–00	TAILLIGHT UNIT ASSY UNIDAD FARO TRASERO COMPL.	1					
2	5RM–H4721–00	.LENS, TAILLIGHT .LENTE DE FARO TRASERO	1					
3	5HH–H4714–00	.BULB (12V-21/5W) .BOMBILLA (12V-21/5W)	1					
4	9770M–04025	.SCREW, TAPPING .TORNILLO ROSCA HEMBRA	2					
5	5RM–H4723–00	.GASKET, TAIL LENS .EMPAQUE LENTE FARO TRASERO	1					
6	5RM–H4527–00	DAMPER AMORTIGUADOR	1					
7	90201–06380	WASHER, PLATE ARANDELA PLANA	2					
8	9570M–06500	NUT, FLANGE TUERCA DE BRIDA	2					

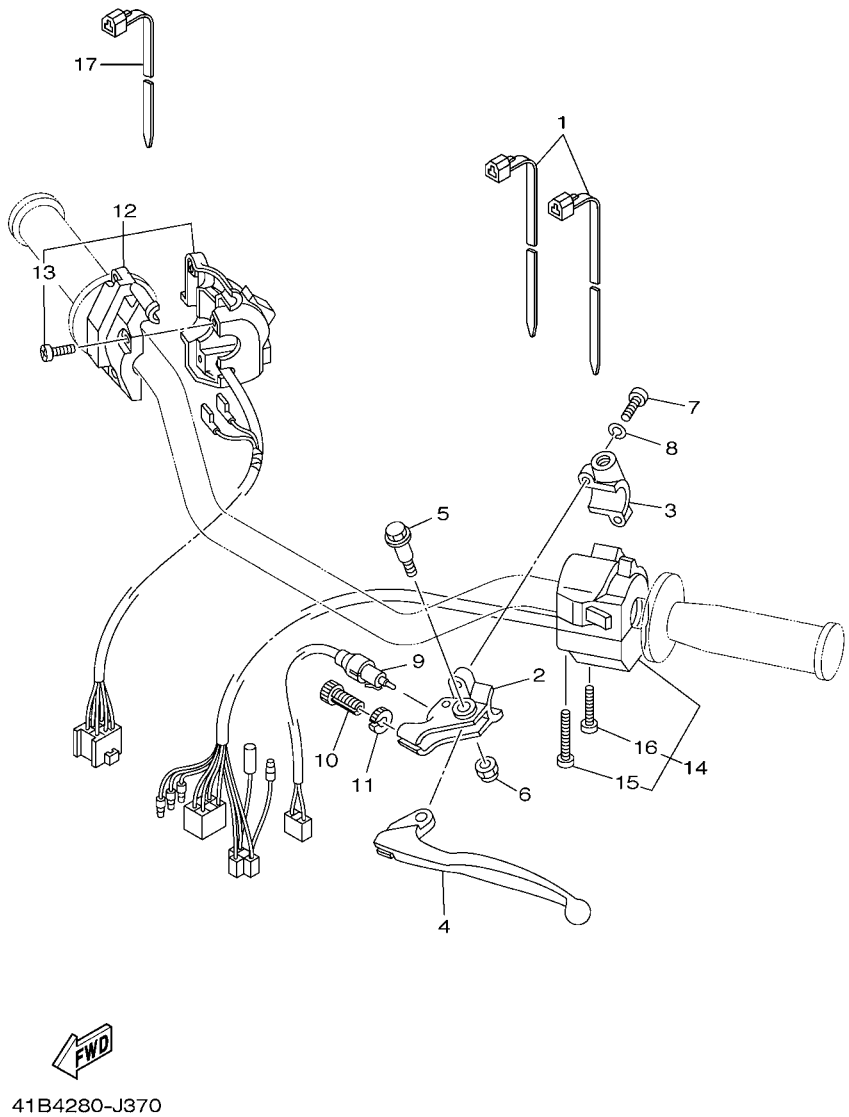

FIG. 37 HANDLE SWITCH & LEVER INTERRUPTOR DE MANILLAR&PALANC

REF. NO.	PART NO. CODIGO Nº	DESCRIPTION DESCRIPCION	41B4					REMARKS OBSERVACIONES
1	90464–13073	CLAMP BRIDA	2					
2	2TY–H2911–00	HOLDER, LEVER 1 SOPORTE DE LEVA 1	1					
3	2TY–H2915–01	HOLDER, LEVER UNDER SOPORTE DE LEVA	1					
4	4AN–H3912–00	LEVER 1 PALANCA 1	1					
5	4LR–H3945–00	BOLT, LEVER PERNO DE PALANCA	1					
6	90185–06W10	NUT, SELF-LOCKING TUERCA AUTOBLOCANTE	1					
7	9851M–05020	SCREW, PAN HEAD TORNILLO DE CABEZA CON PLANA	2					
8	9290M–05100	WASHER ARANDELA	2					
9	5U0–82917–00	SWITCH INTERRUPTOR	1					
10	90123–08046	BOLT PERNO	1					
11	90179–08148	NUT TUERCA	1					
12	5RM–H3975–00	SWITCH, HANDLE 2 INTERRUPTOR DE MANIJA 2	1					
13	98507–05020	.SCREW, PAN HEAD .TORNILLO DE CABEZA PLANA	3					
14	5HH–H3969–10	SWITCH, HANDLE 5 INTERRUPTOR DE MANIJA 5	1					
15	98507–05040	.SCREW, PAN HEAD .TORNILLO DE CABEZA PLANA	1					
16	98507–05030	.SCREW, PAN HEAD .TORNILLO DE CABEZA PLANA	1					
17	90464–13077	CLAMP BRIDA	1					

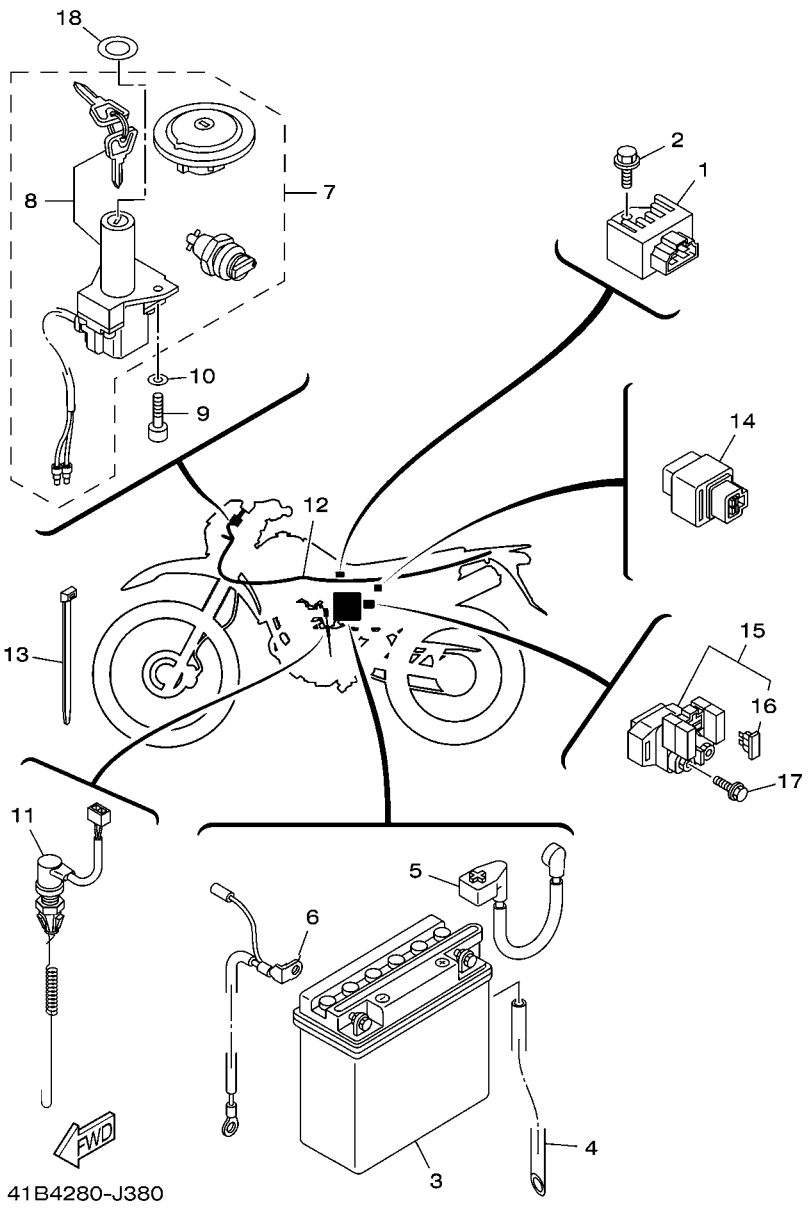

FIG. 38 ELECTRICAL 1 — EQUIPO ELECTRICO 1

REF. NO.	PART NO. CODIGO Nº	DESCRIPTION DESCRIPCION	41B4					REMARKS OBSERVACIONES
1	5VW–H1960–01	RECTIFIER & REGULATOR ASSY RECTIFICADOR Y REGULADOR	1					
2	9502M–06012	BOLT, FLANGE PERNO, DE BRIDA	1					
3	3AY–H2110–00	BATTERY ASSY (YB5L-B 12V-5AH) BATERIA COMPLETA YB5L-B12V-5AH	1					YUASA YUASA
4	5RM–H2112–00	PIPE, BREATHER TUBO DE RESPIRADERO	1					
5	5HH–H2115–00	WIRE, PLUS LEAD CABLE CONDUCTOR POSITIVO	1					
6	5RM–H2116–00	WIRE, MINUS LEAD CABLE CONDUCTOR NEGATIVO	1					
7	21D–H2021–00	KEY SET JUEGO DE LLAVE	1					
8	5LX–H2501–00	.MAIN SWITCH STEERING LOCK .LLAVE DE IGNICION COMPLT	1					
9	9131M–06020	BOLT PERNO	2					
10	9290M–06600	WASHER ARANDELA	2					
11	21D–82530–00	STOP SWITCH ASSY INTERRUPTOR DE PARADA COMPLETO	1					
12	41B–H2590–02	WIRE HARNESS ASSY CONJUNTO DE CABLES	1					
13	90465–13152	CLAMP BRIDA	9					
14	12R–81950–01	RELAY ASSY RELE COMPLETO	1					
15	5HH–81940–02	STARTER RELAY ASSY CONJUNTO ARRANCADOR RELEVO	1					
16	42X–82151–00	.FUSE (10A-BL) .FUSIBLE (10A-BL)	2					
17	9502M–06008	BOLT, FLANGE PERNO, DE BRIDA	2					
18	41B–H2505–00	EMBLEM, MAIN SWITCH EMBLEMA INTERRUPTOR PPAL.	1					

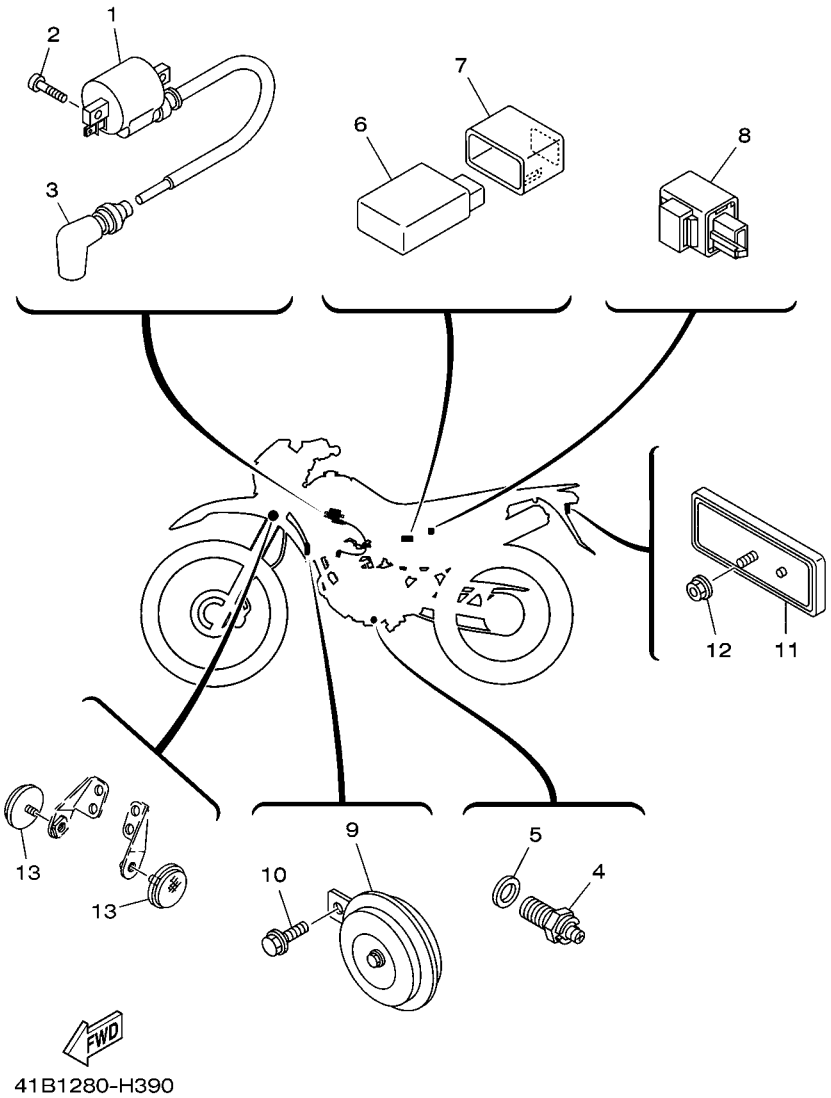

FIG. 39 ELECTRICAL 2 — EQUIPO ELECTRICO 2

REF. NO.	PART NO. CODIGO Nº	DESCRIPTION DESCRIPCION	41B4					REMARKS OBSERVACIONES
1	5HH–H2310–00	IGNITION COIL ASSY BOBINA DE ENCENDIDO COMPLETA	1					
2	9851M–05016	SCREW, PAN HEAD TORNILLO DE CABEZA CON PLANA	2					
3	5HH–H2370–01	PLUG CAP ASSY TAPON DE BUJIA COMPLT	1					
4	5HH–H2540–02	NEUTRAL SWITCH ASSY INTERRUPTOR NEUTRAL COMPL	1					
5	90430–09809	GASKET JUNTA	1					
6	5RM–H5540–20	C.D.I. UNIT ASSY UNIDAD C.D.I. COMPLETA	1					
7	5RM–H5546–00	BAND BANDA	1					
8	5HH–H3350–00	FLASHER RELAY ASSY RELE DE DESTELLADOR COMPL.	1					
9	5HH–H3371–01	HORN BOCINA	1					
10	9580M–06010	BOLT, FLANGE TORNILLO	1					
11	23L–H5130–00	REAR REFLECTOR ASSY REFLECTOR TRASERO COMPLETO	1					
12	9570M–06500	NUT, FLANGE TUERCA DE BRIDA	1					
13	2EK–85111–00	REFLECTOR, FRONT 1 REFLECTOR DELANTERA 1	2					

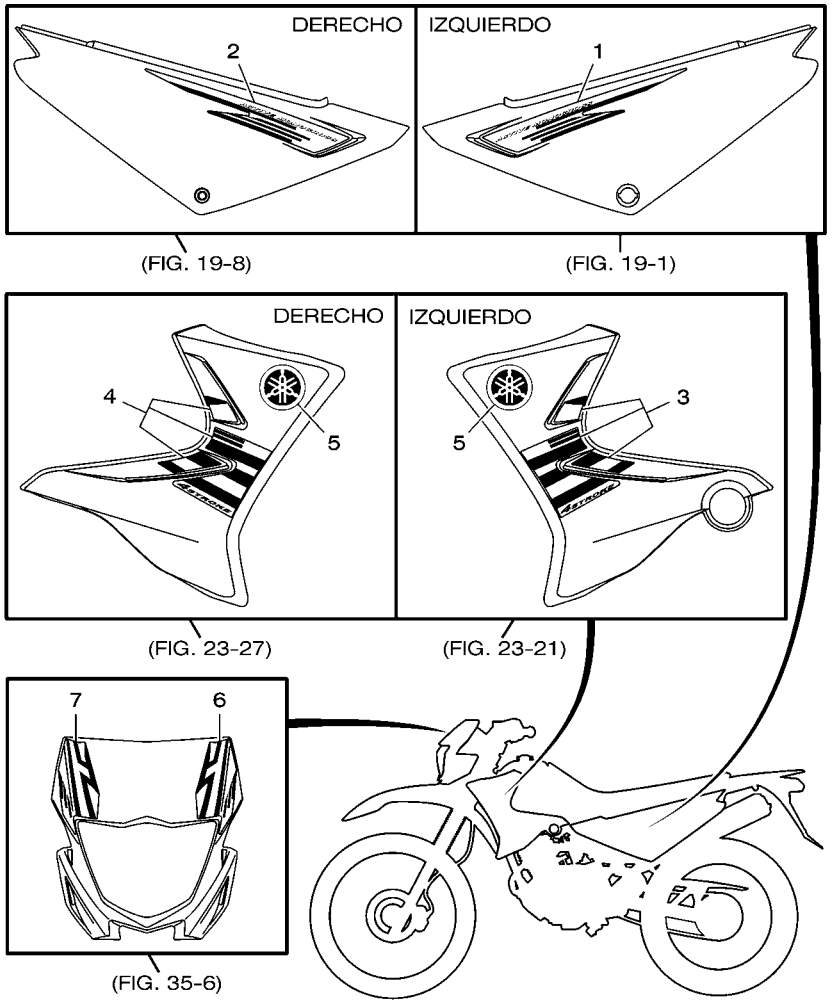

TIPO DEL COLOR	CODIGO DEL COLOR	DESCRIPCIÓN	ABREVIACIÓN
A	00EY	HEAT RED	HTR
C	0033	YAMAHA BLACK	YB

41B4280-J400

FIG. 40 GRAPHIC & EMBLEM 1 — CALCOMANIA & EMBLEMA 1

REF. NO.	PART NO. CODIGO Nº	DESCRIPTION DESCRIPCION	41B4					REMARKS OBSERVACIONES
1	21D–F173E–30	GRAPHIC, 1 GRAFICO, 1	1					UR FOR HTR UR PARA HTR
	21D–F173E–40	GRAPHIC, 1 GRAFICO, 1	1					UR FOR YB UR PARA YB
2	21D–F173F–30	GRAPHIC, 2 GRAFICO 2	1					UR FOR HTR UR PARA HTR
	21D–F173F–40	GRAPHIC, 2 GRAFICO 2	1					UR FOR YB UR PARA YB
3	21D–F4230–30	GRAPHIC SET 1 JUEGO DE CALCOMANIAS	1					UR FOR HTR UR PARA HTR
	21D–F4230–50	GRAPHIC SET 1 JUEGO DE CALCOMANIAS	1					UR FOR YB UR PARA YB
4	21D–F4250–30	GRAPHIC SET 2 JUEGO DE CALCOMANIAS	1					UR FOR HTR UR PARA HTR
	21D–F4250–50	GRAPHIC SET 2 JUEGO DE CALCOMANIAS	1					UR FOR YB UR PARA YB
5	5RM–F4235–00	MARK 1 MARCA 1	2					UR FOR HTR,YB UR PARA HTR,YB
6	21D–F8391–30	GRAPHIC, 1 CALCOMANIA 1	1					UR FOR HTR UR PARA HTR
	21D–F8391–40	GRAPHIC, 1 CALCOMANIA 1	1					UR FOR YB UR PARA YB
7	21D–F8392–30	GRAPHIC, 2 CALCOMANIA 2	1					UR FOR HTR UR PARA HTR
	21D–F8392–40	GRAPHIC, 2 CALCOMANIA 2	1					UR FOR YB UR PARA YB

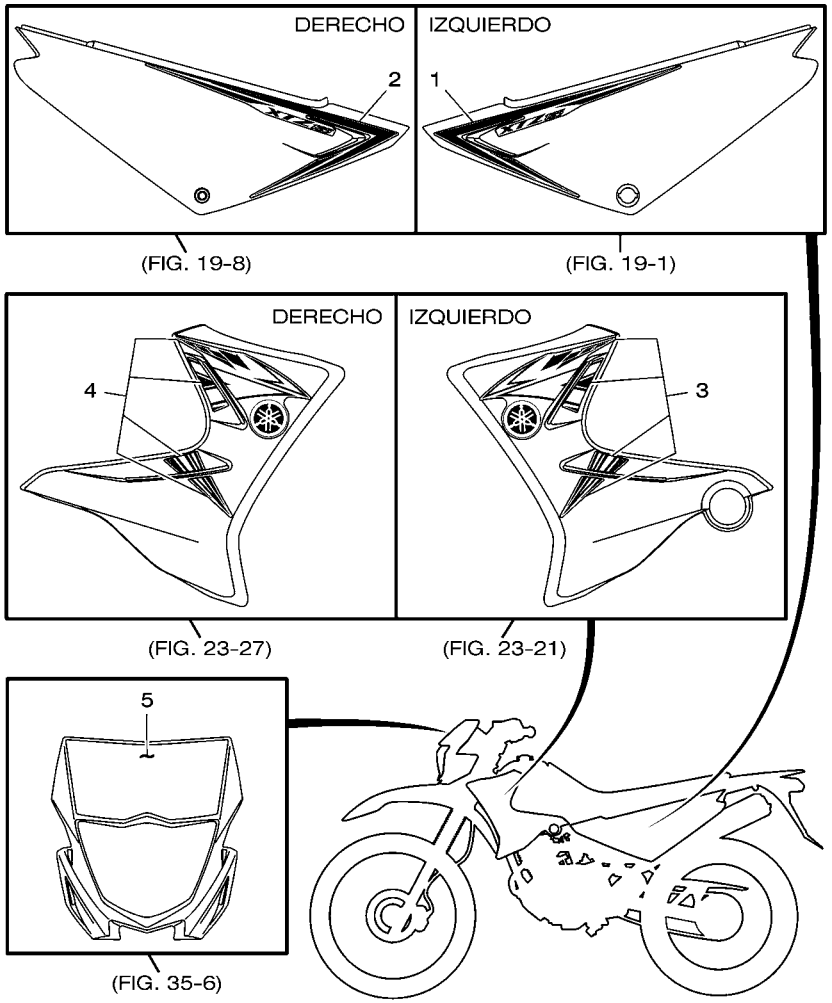

TIPO DEL COLOR	CODIGO DEL COLOR	DESCRIPCIÓN	ABREVIACIÓN
B	0583	DEEP PURPLISH BLUE SOLID E	DPBSE

41B4280-J410

FIG. 41 GRAPHIC & EMBLEM 2 CALCOMANIA & EMBLEMA 2

REF. NO.	PART NO. CODIGO Nº	DESCRIPTION DESCRIPCION	41B4					REMARKS OBSERVACIONES
1	21D–F173L–00	GRAPHIC, 1 CALCOMANIA 1	1					UR FOR DPBSE UR PARA DPBSE
2	21D–F174L–00	GRAPHIC, 2 CALCOMANIA 2	1					UR FOR DPBSE UR PARA DPBSE
3	21D–F4230–40	GRAPHIC SET 1 JUEGO DE CALCOMANIAS	1					UR FOR DPBSE UR PARA DPBSE
4	21D–F4250–40	GRAPHIC SET 2 JUEGO DE CALCOMANIAS	1					UR FOR DPBSE UR PARA DPBSE
5	21D–F8391–50	GRAPHIC, 1 CALCOMANIA 1	1					UR FOR DPBSE UR PARA DPBSE

NUMERICAL INDEX
INDICE NUMERICO

PART NO. CODIGO Nº	REF. NO.
2UJ–11133–10	1 – 2
22F–11134–10	1 – 3
5RM–11607–00	2 – 13
4LS–11638–01	2 – 10
4LS–11651–02	2 – 6
4LS–11681–01	2 – 4
5HH–12113–00	3 – 5
22F–12116–00	3 – 4
22F–12117–02	3 – 7
22F–12118–01	3 – 6
2HX–12119–00	3 – 3
22F–12159–00	3 – 9
5VL–12210–10	4 – 16
5HH–14103–00	7 – 8
5HP–14106–00	7 – 4
5RM–14107–18	7 – 21
5RM–1410A–00	7 – 7
5HH–14112–25	7 – 6
4LS–14126–00	7 – 5
3SP–14128–00	7 – 33
4LS–14131–00	7 – 3
5K7–14134–00	7 – 13
5YM–14141–27	7 – 15
5HP–14142–17	7 – 16
5HP–14145–00	7 – 17
3H1–14147–00	7 – 10
4LS–14147–00	7 – 29
4LS–14158–00	7 – 46
3SP–14179–00	7 – 31
24W–14184–00	7 – 14
5HH–14185–00	7 – 20
127–14186–00	7 – 22
4LS–14191–00	7 – 9
3SP–14194–00	7 – 32
5RM–14196–10	7 – 28
5RM–14197–10	7 – 39
5RM–14197–20	7 – 23
5RM–14197–30	7 – 43
3SP–14216–00	7 – 36
5HP–14216–00	7 – 45
620–1423A–70	7 – 18
66E–14251–00	7 – 37
3SP–14264–00	7 – 35
5YM–14276–00	7 – 30
5HP–14280–00	7 – 41
5HP–14348–00	7 – 38
5RM–14451–00	6 – 10
21D–14452–00	6 – 17

PART NO. CODIGO Nº	REF. NO.
21D–14462–00	6 – 18
583–14561–00	7 – 19
5HP–14565–00	7 – 44
4FU–14714–10	8 – 9
21D–14718–00	8 – 12
5VY–14757–00	8 – 17
5HP–1490J–00	7 – 2
4LS–14923–20	7 – 12
5AP–14933–00	7 – 40
5AP–14940–00	7 – 42
3H1–14962–00	7 – 11
5LX–15641–00	11 – 2
5LX–15651–00	11 – 7
5RM–15660–10	11 – 1
5RE–16111–00	13 – 1
5RM–17121–00	14 – 3
5RM–17131–00	14 – 4
5RM–17221–00	14 – 14
5RM–17231–10	14 – 15
5RM–22210–02	20 – 17
5NY–22475–00	20 – 18
35E–23114–00	22 – 20
	22 – 39
10V–23147–00	22 – 10
	22 – 29
34X–23151–00	22 – 13
	22 – 32
1UA–23153–00	22 – 18
	22 – 37
34X–23156–00	22 – 9
	22 – 28
34X–23157–00	22 – 12
	22 – 31
3M7–23181–00	22 – 16
	22 – 35
5HP–23416–00	21 – 3
34X–25190–01	25 – 14
21D–26335–00	28 – 7
5RM–28100–00	17 – 26
5HH–81940–02	38 – 15
12R–81950–01	38 – 14
42X–82151–00	38 – 16
21D–82530–00	38 – 11
5U0–82917–00	37 – 9
42X–83517–00	34 – 10
4B4–84334–00	35 – 19
2EK–85111–00	39 – 13
5RR–E1111–10	1 – 1

PART NO. CODIGO Nº	REF. NO.
5HH–E111F–00	4 – 6
5HH–E1161–00	1 – 8
5RM–E1166–10	9 – 3
5HH–E1167–00	9 – 2
5HH–E1181–00	1 – 16
5VL–E1185–10	1 – 7
5HH–E1186–00	1 – 11
5HH–E1310–10–35	1 – 19
5HH–E1351–00	1 – 20
5RM–E1400–10	2 – 1
5HH–E1422–10	2 – 7
5HH–E1500–02	2 – 14
5HH–E1536–00	2 – 8
5RM–E1603–00	2 – 13
5RM–E1604–00	2 – 13
5RM–E1605–00	2 – 13
5RM–E1606–00	2 – 13
5HH–E1631–00–C0	2 – 10
5HH–E1633–00	2 – 11
5HH–E1635–09	2 – 10
5HH–E1636–09	2 – 10
5HH–E1637–09	2 – 10
5HH–E2111–00	3 – 1
5HH–E2121–00	3 – 2
5HH–E2151–00	3 – 8
5VL–E2156–00	3 – 11
5HH–E2170–20	4 – 1
5VL–E2176–10	4 – 8
5HH–E2213–00	4 – 17
5HH–E2231–10	4 – 12
5HH–E2241–10	4 – 13
5VL–E3300–01	5 – 1
5VL–E3324–00	5 – 11
5VL–E3325–00	5 – 2
5HH–E3329–00	5 – 6
5HH–E3411–01	5 – 10
5VL–E3451–00	5 – 12
5HH–E3569–00	6 – 2
5HH–E3586–00	6 – 1
5YM–E4101–01	7 – 1
41B–E4410–00	6 – 7
5RM–E4411–00	6 – 8
5RM–E4412–00	6 – 9
5RM–E4425–00	6 – 25
5RM–E4437–00	6 – 15
5HH–E443E–01	6 – 20
5RM–E4453–00	6 – 16
5RM–E4458–00	6 – 12

PART NO. CODIGO Nº	REF. NO.
5RM–E4459–00	6 – 11
4VW–E4462–10	6 – 23
5RM–E4472–00	6 – 22
5RM–E4611–02	8 – 1
5HH–E4613–00	8 – 18
22D–E4628–00	8 – 2
58S–E4711–00	8 – 7
21D–E4758–00	8 – 11
5HH–E5150–41	9 – 1
5HH–E5191–00	10 – 10
5HH–E5362–00	10 – 20
5HH–E5411–01	10 – 1
5RM–E5418–00	10 – 12
5LX–E5421–00	10 – 14
5RM–E5441–00	9 – 10
5HH–E5451–00	10 – 2
5HH–E5461–00	10 – 15
5VL–E5512–00	12 – 1
5VL–E5517–00	12 – 5
5HH–E5521–00	12 – 2
5HH–E5532–00	12 – 3
4FP–E5580–00	12 – 7
5HH–E5598–00	4 – 14
5RM–E5620–00	11 – 10
5LX–E5666–00	11 – 6
5LX–E5671–00	11 – 13
5RM–E6150–10	13 – 5
5RM–E6154–00	13 – 6
5HH–E6321–00	13 – 8
5RM–E6324–00	13 – 9
5RM–E6333–00	13 – 11
5RM–E6337–00	13 – 12
5RM–E6351–00	13 – 10
5RM–E6356–00	13 – 14
5HH–E6357–00	13 – 20
5RM–E6358–00	13 – 13
5RM–E6371–00	13 – 7
5RM–E6377–00	13 – 16
5RM–E6381–01	13 – 21
5RM–E6628–00	13 – 15
5RM–E7141–00	14 – 5
5HH–E7151–20	14 – 2
5HH–E7211–20	14 – 19
5RM–E7241–00	14 – 18
5HH–E7251–20	14 – 13
5LX–E7258–00	14 – 20
5HH–E7402–30	14 – 12
5HH–E7411–10	14 – 1

PART NO. CODIGO Nº	REF. NO.
4AN–E7456–00	14 – 27
5HH–E7471–00	14 – 10
5HH–E8101–01	16 – 7
5RM–E8110–00	16 – 9
5HH–E8113–00	16 – 10
5HH–E8140–00	16 – 1
5HH–E8185–00	15 – 2
5HH–E8337–00	16 – 2
5HH–E8511–00	15 – 5
5HH–E8512–00	15 – 6
5HH–E8513–00	15 – 7
5HH–E8531–00	15 – 8
5HH–E8535–00	15 – 9
5HH–E8540–00	15 – 1
21D–F1110–00–33	17 – 1
1B2–F1268–00	17 – 23
5RM–F1275–10–33	17 – 19
5RM–F127A–10–33	17 – 18
5RM–F1316–10–33	17 – 5
5RM–F1317–00–35	17 – 10
5RM–F137W–00	23 – 21
5RM–F137W–10	23 – 21
5RM–F137W–20	23 – 21
5RM–F137X–00	23 – 27
5RM–F137X–10	23 – 27
5RM–F137X–20	23 – 27
1B2–F1471–00	17 – 21
1B2–F1485–00	17 – 22
5RM–F1511–00	18 – 1
5RM–F1511–10	18 – 1
5RM–F1511–20	18 – 1
5HH–F153E–00	18 – 6
	18 – 18
5HH–F153E–30	18 – 6
	18 – 18
5RM–F1611–A0	18 – 7
5RM–F1611–B0	18 – 7
5RM–F1611–C0	18 – 7
5RM–F1642–00	18 – 14
41B–F1668–00	20 – 15
5RM–F1685–00	18 – 11
5VL–F1708–00	19 – 2
5RM–F1711–20	19 – 1
5RM–F1711–30	19 – 1
5RM–F1719–00	18 – 10
5RM–F1721–20	19 – 8
5RM–F1721–30	19 – 8
21D–F173E–30	40 – 1

PART NO. CODIGO Nº	REF. NO.
21D–F173E–40	40 – 1
21D–F173F–30	40 – 2
21D–F173F–40	40 – 2
21D–F173L–00	41 – 1
21D–F174L–00	41 – 2
5RM–F177G–00	19 – 14
21D–F2110–00–35	20 – 1
5RM–F2126–00	20 – 5
5L9–F2128–00	20 – 4
4AN–F2141–11	20 – 6
21D–F2151–00	20 – 9
5RM–F2178–00	17 – 15
5RM–F2184–00	17 – 14
5RM–F2311–00	20 – 12
5RM–F3100–00	22 – 1
5RM–F3102–00	22 – 2
5RM–F3103–00	22 – 21
5RM–F3110–00	22 – 4
	22 – 23
2TW–F3111–A0	22 – 19
	22 – 38
5RM–F3125–00	22 – 11
	22 – 30
5RM–F3126–00	22 – 3
5RM–F3135–00	22 – 14
	22 – 33
5RM–F3136–00	22 – 22
2TW–F3144–A0	22 – 7
	22 – 26
2TW–F3145–A0	22 – 8
	22 – 27
4AN–F3166–00	22 – 15
	22 – 34
2TW–F3168–A0	22 – 17
	22 – 36
5RM–F3171–00	22 – 6
	22 – 25
21D–F3174–00	21 – 15
41B–F317E–00	22 – 45
41B–F317F–00	22 – 46
5RM–F3191–00	22 – 41
4AN–F3192–10	22 – 42
4AN–F3192–W0	22 – 40
4AN–F3317–01	21 – 18
21D–F3318–00	29 – 19
5RM–F3340–00	22 – 43
4AN–F3346–10	22 – 44
5RM–F3351–00	22 – 5

NUMERICAL INDEX
INDICE NUMERICO

PART NO. CODIGO Nº	REF. NO.
5RM–F3351–00	22 – 24
21D–F3389–00	21 – 22
5HH–F3418–00	21 – 7
21D–F3435–00	21 – 8
3V9–F3441–10–35	21 – 13
5RM–F3467–00	29 – 21
21D–F4100–30	23 – 1
21D–F4100–40	23 – 1
21D–F4100–50	23 – 1
2TY–F4181–00	8 – 10
5HH–F4181–00	23 – 20
5RM–F4182–00	23 – 16
5RM–F4183–00	23 – 17
5RM–F4186–00	23 – 18
21D–F4230–30	40 – 3
21D–F4230–40	41 – 3
21D–F4230–50	40 – 3
5RM–F4235–00	40 – 5
21D–F4244–30	23 – 2
21D–F4244–40	23 – 2
21D–F4244–50	23 – 2
21D–F4245–30	23 – 3
21D–F4245–40	23 – 3
21D–F4245–50	23 – 3
21D–F4250–30	40 – 4
21D–F4250–40	41 – 4
21D–F4250–50	40 – 4
5RM–F4500–00	23 – 4
5HH–F4512–00	23 – 7
5HH–F4523–00	23 – 8
1YH–F4524–00	23 – 9
5HH–F4534–00	23 – 5
5VL–F4610–01	23 – 15
5RM–F4730–00	24 – 1
5RM–F4731–00	24 – 2
5RM–F4832–10	24 – 5
4AN–F5111–10–35	25 – 1
5RM–F5181–00	25 – 12
5HH–F5195–01	25 – 7
	27 – 22
5RM–F5196–00	25 – 6
5RM–F5311–00–35	27 – 1
5RM–F5321–00–35	27 – 6
5HH–F5330–00	27 – 8
5HH–F533A–00	27 – 7
5RM–F5351–00	27 – 13
5RM–F5355–00	27 – 10
5L9–F5367–00	27 – 34

PART NO. CODIGO Nº	REF. NO.
5HH–F536G–00	26 – 13
5RM–F5381–01	27 – 35
5RM–F5388–00	27 – 30
5RM–F5389–00	27 – 31
5RM–F5391–00	27 – 20
5RM–F5392–00	27 – 21
5RM–F5396–00	27 – 18
5RM–F5397–00	27 – 19
5RM–F5412–00	27 – 27
5RM–F5448–20	27 – 26
5RM–F580T–00	26 – 3
5RM–F582T–00	26 – 1
5RM–F583T–10	29 – 1
5LW–F5852–00	29 – 4
5HH–F5854–00	29 – 3
5LW–F585B–00	29 – 13
5HH–F5867–00	29 – 6
5RM–F5872–10	29 – 14
5RM–F5875–00	29 – 17
5HH–F5917–00	26 – 15
5RM–F5921–00	26 – 10
5HH–F5924–00	26 – 9
5HH–F5926–00	26 – 12
5HH–F5934–00	26 – 8
5HH–F5937–00	26 – 11
5HH–F5961–00	26 – 14
5RM–F6111–00	28 – 1
4VW–F6241–00	28 – 5
4VW–F6242–00	28 – 3
5L9–F6243–00	28 – 2
5RM–F6249–00	28 – 4
5HH–F6280–00	28 – 11
5HH–F6290–00	28 – 12
5RM–F6311–00	28 – 6
5HH–F6332–00	29 – 7
1S4–F6342–00	28 – 8
5RM–F6372–00	28 – 9
5RM–F7211–00	30 – 1
5RM–F7231–00	30 – 9
5RM–F7261–00	30 – 2
21D–F7311–00	30 – 16
4VW–F7411–00	30 – 21
5RM–F7421–00	30 – 22
5HH–F7431–00	30 – 26
5RM–F7432–10–33	30 – 32
5HH–F7433–00	30 – 27
5HH–F7441–00	30 – 33
5RM–F7442–10–33	30 – 39

PART NO. CODIGO Nº	REF. NO.
5HH–F7444–00	30 – 34
5HH–F7445–01	30 – 28
	30 – 35
41B–F8199–S0	17 – 27
5RM–F8267–00	19 – 23
21D–F834E–00	35 – 9
21D–F834F–00	35 – 10
21D–F8391–30	40 – 6
21D–F8391–40	40 – 6
21D–F8391–50	41 – 5
21D–F8392–30	40 – 7
21D–F8392–40	40 – 7
5RM–H1410–00	31 – 2
5HH–H1450–30	31 – 1
5HH–H1800–01	32 – 1
7CP–H1801–00	32 – 2
4FP–H1828–01	32 – 4
4FP–H182L–00	32 – 5
5HH–H183G–01	32 – 6
5VW–H1960–01	38 – 1
21D–H2021–00	38 – 7
3AY–H2110–00	38 – 3
5RM–H2112–00	38 – 4
5HH–H2115–00	38 – 5
5RM–H2116–00	38 – 6
5RM–H2123–00	19 – 21
5RM–H2131–00	19 – 22
5HH–H2310–00	39 – 1
5HH–H2370–01	39 – 3
5LX–H2501–00	38 – 8
41B–H2505–00	38 – 18
5HH–H2540–02	39 – 4
41B–H2590–02	38 – 12
2TY–H2911–00	37 – 2
2TY–H2915–01	37 – 3
5D1–H3310–00	33 – 1
42K–H3311–00	33 – 12
	33 – 16
3D9–H3311–10	33 – 4
	33 – 8
1S4–H3312–00	33 – 11
	33 – 15
5RM–H3316–00	33 – 19
3D9–H3318–10	33 – 9
5D1–H3320–00	33 – 5
5HH–H3321–01	33 – 18
4B4–H3330–01	33 – 10
3D9–H3333–10	33 – 3

PART NO. CODIGO Nº	REF. NO.
3D9–H3333–10	33 – 7
3D9–H333A–00	33 – 2
4B4–H3340–01	33 – 14
3D9–H334A–00	33 – 6
5HH–H3350–00	39 – 8
5HH–H3359–02	33 – 20
5HH–H3371–01	39 – 9
21D–H3500–00	34 – 1
21D–H350E–00	34 – 5
5RM–H350W–00	34 – 8
5RM–H3523–00	23 – 33
5HH–H3524–00	34 – 12
35N–H3531–00	34 – 9
	35 – 6
5RM–H353H–00	34 – 6
5RM–H353R–00	34 – 4
5RM–H3550–00	34 – 18
5RM–H3559–00	34 – 2
5RM–H3570–10	34 – 7
5RM–H3578–00	34 – 15
5RM–H357K–00	34 – 3
5HH–H3634–00	34 – 14
5HH–H366W–00	34 – 13
4AN–H3912–00	37 – 4
5RM–H3922–00	29 – 8
4LR–H3945–00	37 – 5
5HH–H3969–10	37 – 14
5RM–H3975–00	37 – 12
5HH–H3980–10	29 – 11
21D–H4310–10	35 – 1
21D–H4311–00	35 – 8
21D–H4311–10	35 – 8
21D–H4311–20	35 – 8
21D–H4312–00	35 – 5
4AN–H4314–00	35 – 4
41B–H4318–00	21 – 16
21D–H4319–00	21 – 17
21D–H4320–10	35 – 2
4LR–H4332–10	35 – 18
4LR–H433E–00	35 – 16
4VW–H4344–00	35 – 17
18D–H4397–00	35 – 3
5RM–H4527–00	36 – 6
21D–H4710–00	36 – 1
5HH–H4714–00	36 – 3
5RM–H4721–00	36 – 2
5RM–H4723–00	36 – 5
5RM–H4753–00	23 – 34

PART NO. CODIGO Nº	REF. NO.
23L–H5130–00	39 – 11
5RM–H5540–20	39 – 6
5RM–H5546–00	39 – 7
5RM–W0041–00	29 – 2
5RM–W0045–10	26 – 6
5RM–W0047–00	26 – 5
5HH–W0048–00	26 – 7
5RM–W0057–00	26 – 4
5RM–WE141–20	2 – 2
5RM–WF483–10	24 – 4
90101–06W00	27 – 11
90101–06W10	6 – 27
	19 – 18
90101–06W11	6 – 28
90101–08W10	4 – 10
90101–10805	30 – 17
90101–12498	20 – 19
90105–06813	26 – 2
90105–08002	17 – 12
90105–08007	17 – 3
90105–08011	17 – 7
90105–08345	21 – 11
90105–08724	1 – 13
90105–08846	17 – 11
90105–10638	26 – 16
90105–12030	20 – 20
90109–063F7	16 – 3
90109–06577	29 – 9
90109–06W35	9 – 6
90109–06W36	9 – 7
90109–06W37	9 – 8
90109–06W38	10 – 25
90110–06W02	1 – 18
90116–10390	27 – 29
90123–08046	37 – 10
90149–06302	35 – 15
90149–06W03	15 – 4
90153–06803	1 – 5
90155–06800	5 – 7
90157–03122	23 – 10
90159–05163	35 – 12
90170–05302	3 – 10
90170–10219	27 – 28
90170–12060	13 – 18
90170–22850	19 – 3
90175–06020	30 – 15
90175–06807	6 – 14
90176–22081	21 – 9

PART NO. CODIGO Nº	REF. NO.
90179–08148	37 – 11
90179–12813	11 – 11
	13 – 4
90179–25W22	21 – 6
90179–25W23	21 – 4
90183–05008	35 – 7
	35 – 11
90183–06802	6 – 24
	18 – 12
	19 – 19
90185–06W10	37 – 6
90185–08169	17 – 4
	17 – 9
	17 – 13
90185–10037	30 – 19
90185–12134	20 – 7
90201–062G3	8 – 14
90201–06380	36 – 7
90201–06735	6 – 13
90201–06804	6 – 29
	18 – 3
	18 – 17
	19 – 13
	19 – 15
	23 – 24
	23 – 30
90201–07641	5 – 4
90201–08326	4 – 9
	8 – 21
90201–08609	1 – 14
90201–08753	17 – 16
90201–10135	30 – 3
90201–10886	29 – 16
90201–122H1	2 – 18
	13 – 3
90201–124G9	20 – 22
90201–12W69	20 – 8
90201–14W70	27 – 36
90201–177G4	11 – 8
	14 – 21
90201–20266	14 – 6
90201–20272	14 – 22
90201–202L3	11 – 4
90201–220T0	21 – 10
90201–225A4	19 – 5
90201–25290	12 – 6
90202–05187	8 – 5
90202–05188	8 – 6

NUMERICAL INDEX
INDICE NUMERICO

PART NO. CODIGO Nº	REF. NO.
90202–06W01	23 – 12
90202–26142	21 – 5
90206–06090	8 – 4
90206–14001	30 – 4
90206–14093	27 – 16
90208–07052	5 – 5
90214–19002	14 – 16
90215–12211	13 – 17
90240–08W04	30 – 23
90249–06220	30 – 29
	30 – 36
90249–12800	30 – 14
90269–07077	23 – 26
	23 – 32
90280–03045	2 – 17
90282–05001	13 – 2
90338–16148	17 – 2
90340–12097	5 – 8
90340–14W02	10 – 6
90340–32W03	10 – 8
90381–18800	20 – 3
90387–06023	8 – 16
	18 – 5
90387–06113	35 – 14
90387–061V4	18 – 4
90387–06681	17 – 25
90387–06W41	20 – 10
90387–06W62	18 – 9
	19 – 16
	20 – 14
90387–10003	30 – 18
90387–1001B	19 – 9
90387–1001C	23 – 23
	23 – 29
90387–10W66	18 – 15
	23 – 22
	23 – 28
90387–15802	27 – 32
	27 – 33
90387–15W36	25 – 11
90387–16804	4 – 4
90387–227H7	28 – 10
90401–10816	29 – 15
90430–06817	1 – 6
	4 – 19
90430–09809	39 – 5
90430–12227	5 – 9
90445–05807	29 – 24

PART NO. CODIGO Nº	REF. NO.
90445–10M50	23 – 13
90450–44062	6 – 6
90460–46206	6 – 30
90464–13073	37 – 1
90464–13077	37 – 17
90465–08801	10 – 24
90465–08802	10 – 23
90465–13152	38 – 13
90467–09W06	23 – 14
90467–10819	6 – 3
90467–13858	9 – 4
90467–15012	6 – 21
90468–20196	30 – 5
90468–26048	11 – 3
90480–01868	19 – 7
	19 – 11
90480–12581	8 – 15
90480–13567	19 – 6
	19 – 10
90480–14003	35 – 13
90480–24186	19 – 4
90501–10802	30 – 13
90506–15260	27 – 9
90506–23801	30 – 6
90506–35474	30 – 20
90508–16W13	13 – 22
90508–20W07	30 – 25
90508–26667	11 – 5
90508–32W15	16 – 5
90560–15290	25 – 3
90560–15313	27 – 2
9131M–06010	29 – 20
9131M–06012	4 – 7
9131M–06014	31 – 4
9131M–06020	6 – 5
	8 – 19
	31 – 3
	38 – 9
9131M–08016	8 – 20
	12 – 8
91380–06035	10 – 17
91401–20012	30 – 12
91401–25015	30 – 24
91701–06020	30 – 10
92017–08020	30 – 40
92907–03100	7 – 25
92907–04100	7 – 27
92907–05100	32 – 8

PART NO. CODIGO Nº	REF. NO.
92907–08100	7 – 34
9290L–06200	30 – 11
	30 – 30
	30 – 37
9290M–04600	29 – 23
9290M–05100	37 – 8
9290M–05200	21 – 20
9290M–06600	6 – 26
	38 – 10
9290M–08200	21 – 12
93101–10800	10 – 22
93101–12173	16 – 4
93102–12224	13 – 23
93102–20143	14 – 24
93106–20021	25 – 4
93106–26005	27 – 5
93109–14021	27 – 14
93109–20014	11 – 12
93210–11001	2 – 15
93210–11453	4 – 3
93210–14104	27 – 15
93210–14800	10 – 7
93210–19123	10 – 21
93210–30800	6 – 4
93210–32800	10 – 9
93210–44800	1 – 12
93210–55669	32 – 3
93210–57800	1 – 21
93210–79200	1 – 9
93306–002Y5	4 – 5
93306–003X0	4 – 2
93306–201X3	14 – 8
93306–20221	2 – 16
93306–203XD	14 – 25
93306–203YG	14 – 9
93306–204X8	14 – 23
93306–205A0	2 – 3
	2 – 9
93306–252Y5	25 – 2
93306–252YS	27 – 4
93306–302X6	27 – 3
93310–6290C	2 – 5
93332–00079	21 – 1
93399–99949	21 – 2
93410–20809	14 – 7
93410–22039	14 – 17
93440–10109	1 – 4
93450–16068	2 – 12

PART NO. CODIGO Nº	REF. NO.
93503–16802	13 – 19
93604–10011	15 – 3
93608–30839	16 – 8
93700–06804	20 – 2
93822–14043	14 – 26
94108–21802	25 – 8
94111–18800	27 – 23
94211–18850	27 – 24
94227–21848	25 – 9
94325–18801	27 – 25
94325–21117	25 – 10
94416–21800	25 – 5
94421–18801	27 – 17
94581–97121	27 – 38
94582–18090	4 – 11
94681–97001	27 – 39
94700–00834	1 – 15
9502L–06020	34 – 17
9502L–08035	21 – 14
9502M–06008	38 – 17
9502M–06010	14 – 28
	29 – 18
9502M–06012	38 – 2
9502M–06016	4 – 18
9502M–06020	1 – 10
9502M–06025	32 – 9
9502M–06035	10 – 4
	10 – 18
9502M–06045	10 – 5
	10 – 19
9502M–08012	17 – 17
9502M–08035	8 – 8
9530M–05600	21 – 21
9530M–06600	27 – 12
9530M–06700	30 – 8
95607–10200	17 – 8
95607–14200	25 – 13
	27 – 37
9560M–06100	29 – 10
95617–12100	20 – 21
9570M–06500	36 – 8
	39 – 12
9570M–08500	33 – 21
9570M–12500	2 – 19
95807–06020	20 – 11
9580M–06010	39 – 10
9580M–06014	18 – 8
	18 – 13

PART NO. CODIGO Nº	REF. NO.
9580M–06014	20 – 13
	24 – 3
9580M–06016	17 – 24
9580M–06020	4 – 15
9581M–06016	10 – 13
9581M–10075	17 – 6
9582M–06012	23 – 19
9582M–08014	17 – 20
	24 – 6
9700M–06016	18 – 16
	19 – 17
	30 – 7
9700M–06020	18 – 2
97017–06020	16 – 11
9760L–04312	29 – 12
97704–04008	34 – 16
97704–04012	34 – 11
9770M–04025	36 – 4
9770M–06025	33 – 13
	33 – 17
98507–03006	7 – 24
98507–04014	7 – 26
98507–05008	32 – 7
98507–05020	37 – 13
98507–05030	37 – 16
98507–05040	37 – 15
9850L–03008	23 – 6
9851M–04018	29 – 22
9851M–05016	39 – 2
9851M–05020	21 – 19
	37 – 7
9851M–06010	10 – 11
9851M–06012	12 – 4
9851M–06014	14 – 11
9851M–06020	6 – 19
9870M–04012	29 – 5
9890M–06012	23 – 25
	23 – 31
9890M–06016	19 – 12
	19 – 20
	23 – 11
98980–06010	8 – 3
98980–06014	8 – 13
99001–05600	30 – 31
	30 – 38
99001–10600	16 – 6
99002–05600	5 – 3
99009–17400	11 – 9

PART NO. CODIGO Nº	REF. NO.
99009–20500	13 – 24
99244–00160	20 – 16
99530–10114	1 – 17
	9 – 5
	9 – 9
	10 – 3
	10 – 16