YAMAHA

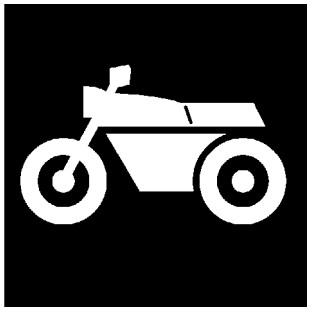

PARTS CATALOGUE

FZS10X (3C3L) U49
FZS10XC (3C3M) CALIFORNIA
FZS10X (3C3N) CANADA

1G3C3-100E1

(2G3C3-100E1)

YAMAHA GENUINE Parts & Accessories

A2

FZS10X/FZS10XC
PARTS CATALOGUE
©2007 by Yamaha Motor Co., Ltd.
1st edition, August 2007
All rights reserved.
Any reprinting or unauthorized use
without the written permission of
Yamaha Motor Co., Ltd.
is expressly prohibited.

A3

FOREWORD

This Parts Catalogue is related to the parts for the model(s) on the cover page. When you are ordering replacement parts, please refer to this Parts Catalogue and quote both part numbers and part names correctly.

1. Modifications or additions which have been made after the issue of the Parts Catalogue will be announced in the Parts News.
   It is advisable that you make the necessary corrections to the Parts Catalogue according to the Parts News.

2. Abbreviations
   The following abbreviations are used in this Parts Catalogue.

   "UR" Use specified parts number.
   "UN" Use as many as needed.
   "AP" Alternate Parts
   "LM" Locally Made (Parts need to be ordered locally)
   "F#" Frame No. (Applicable machine No.)
   "O/S" Over Size

3. The number of components for assembly
   - Parts, which are to be supplied in an assembly, are listed with a dot (.) in front of the part name as shown below.
   - The numeral appearing to the right of each component part indicates the quantity of parts for each assembly unit.

PART NO.	DESCRIPTION	Q'TY	REMARKS
2F5–83310–60	FRONT FLASHER LIGHT ASSY	2	
115–83311–60	.BULB (6V–18W)	1	

4. Applicable colours of graphics are represented in the "REMARKS" as shown below.

PART NO.	DESCRIPTION	Q'TY	REMARKS
2N4–24110–00–X5	FUEL TANK COMP.	2	MXR
3J1–24240–10	.GRAPHIC, FUEL TANK	1	FOR MXR

5. Note that the illustrations for reference in finding parts numbers are not to be used for assembling. When assembling, please use the applicable service manual.

6. The asterisk (*) before a reference number indicates modified items after the first edition.

7. Applicable Serial No.

Engine Serial No.

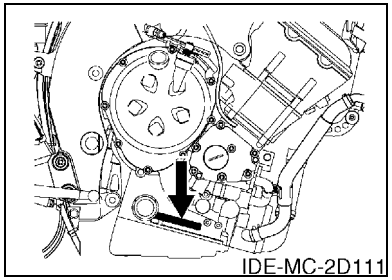

Frame Serial No.

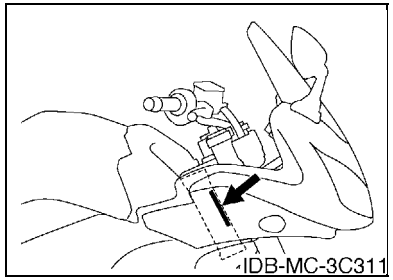

8. Applicable Colour Code (The (*) mark shows Model colour.)

Abbreviation	Colour Name	Colour Code
DNMG(*)	DARK GRAY METALLIC G	1086
DRMK(*)	DEEP RED METALLIC K	0918
MBL2	MAT BLACK 2	0582
NG	NEBURA GOLD	008L
S8	SILVER 8	0895

MODEL LABEL

(1) A label called “Model Label” is affixed in the location as indicated in (3) below.
When using this parts catalogue, please be sure to cross–reference the “model code – production code No.” in the catalogue with the “model code – production code No.” indicated on the Model Label affixed onto the product concerned.

(2) “Model Label” Indication

a b ○ xxxx – xxx ● x c	a: Model Type Code b: Production Code No. c: Colouring Type

○ 4TW1–010 ● A

(3) Model Label Affixing Location

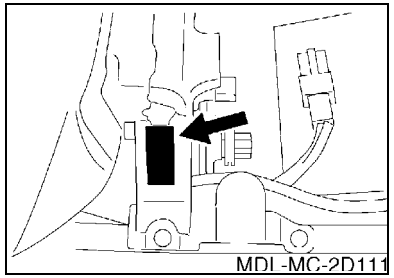

(4) Colouring Information

Model Code	Colouring Type Code	Colour Code	Colour Name	Abbreviation
3C3L	A	1086	DARK GRAY METALLIC G	DNMG
	B	0918	DEEP RED METALLIC K	DRMK
3C3M	A	1086	DARK GRAY METALLIC G	DNMG
	B	0918	DEEP RED METALLIC K	DRMK
3C3N	A	1086	DARK GRAY METALLIC G	DNMG
	B	0918	DEEP RED METALLIC K	DRMK

(5) Model Code – Production Code Number of Model Listed in This Parts Catalogue

Model Code	Production Code No.	Country (destination)	Model Code	Production Code No.	Country (destination)
3C3L	010	U49			
3C3M	010	CALIFORNIA			
3C3N	010	CANADA			

CONTENTS

ENGINE

CYLINDER HEAD B2
CYLINDER B4
CRANKSHAFT & PISTON B5
VALVE B6
CAMSHAFT & CHAIN B8
WATER PUMP B9
RADIATOR & HOSE B11
OIL PUMP B13
OIL CLEANER B14
INTAKE B15
INTAKE 2 ..... C2
AIR INDUCTION SYSTEM C4
EXHAUST C5
CRANKCASE C6
CRANKCASE COVER 1 ..... C7
STARTER C9
CLUTCH C10
TRANSMISSION C12
SHIFT CAM & FORK C14
SHIFT SHAFT C15

CHASSIS

FRAME D2
FENDER D4
SIDE COVER D7
REAR ARM D8
REAR SUSPENSION D10
STEERING D11
FRONT FORK D12
FUEL TANK D14
SEAT E3
FRONT WHEEL E4
FRONT BRAKE CALIPER E5
REAR WHEEL E6
REAR BRAKE CALIPER E8
STEERING HANDLE & CABLE E9
FRONT MASTER CYLINDER E10
STAND & FOOTREST E11
REAR MASTER CYLINDER E14
COWLING 1 ..... E15
GENERATOR F3
STARTING MOTOR F4
FLASHER LIGHT F5
METER F6
HEADLIGHT F7
TAILLIGHT F8
HANDLE SWITCH & LEVER F9
ELECTRICAL 1 ..... F10
ELECTRICAL 2 ..... F12

INDEX

NUMERICAL INDEX M1

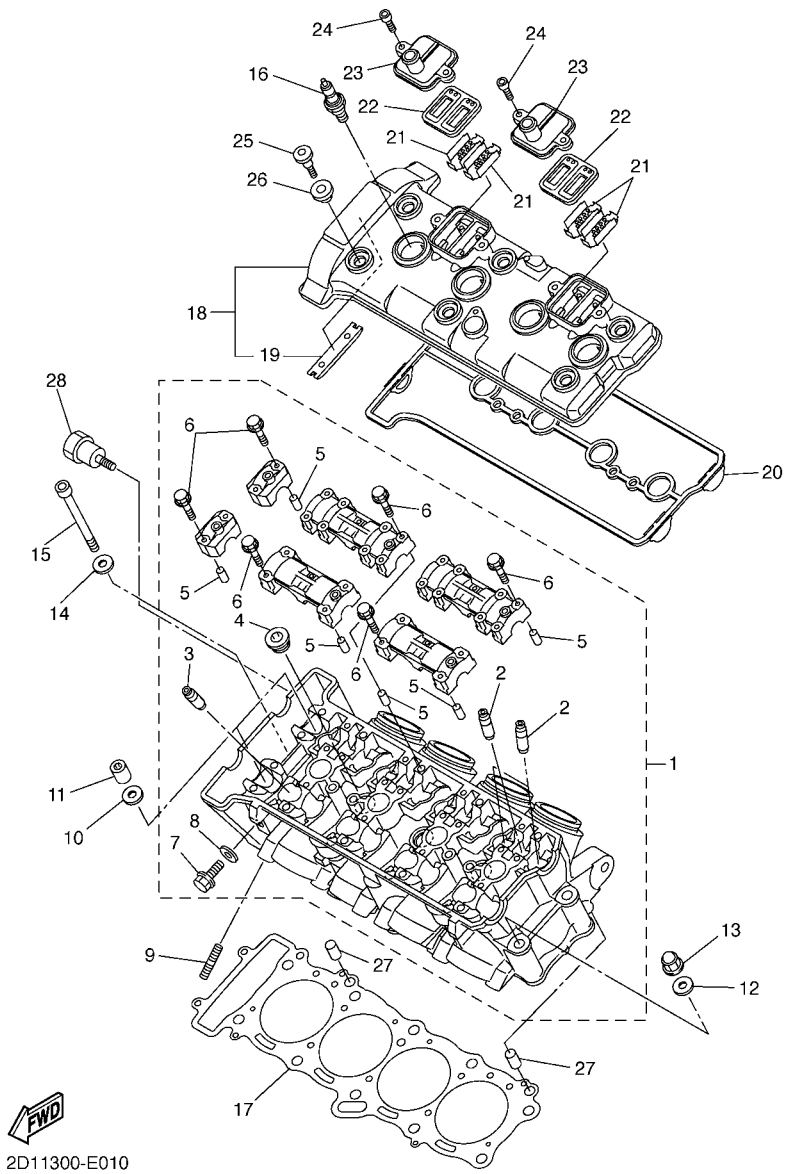

FIG. 1 CYLINDER HEAD

REF. NO.	PART NO.	DESCRIPTION	3C3L	3C3M	3C3N			REMARKS
1	5VY–11101–20	CYLINDER HEAD ASSY	1	1	1			
2	5VY–11133–10	.GUIDE, VALVE 1	12	12	12			
3	5VY–11134–10	.GUIDE, VALVE 2	8	8	8			
4	90340–18002	.PLUG, STRAIGHT SCREW	3	3	3			
5	91808–16023	.PIN, DOWEL	12	12	12			
6	90105–06026	.BOLT, FLANGE	28	28	28			
7	95024–06012	.BOLT, FLANGE	1	1	1			
8	90430–06014	.GASKET	1	1	1			
9	95612–08625	BOLT, STUD	8	8	8			
10	90201–10033	WASHER, PLATE	8	8	8			
11	90179–10006	NUT	8	8	8			
12	90201–10033	WASHER, PLATE	2	2	2			
13	90176–10075	NUT, CROWN	2	2	2			
14	90201–06034	WASHER, PLATE	2	2	2			
15	91314–06105	BOLT	2	2	2			
16	94701–00403	PLUG, SPARK (NGK CR9EK)	4	4	4			
17	2D1–11181–00	GASKET, CYLINDER HEAD 1	1	1	1			
18	5VY–11191–02	COVER, CYLINDER HEAD 1	1	1	1			
19	5BE–12241–00	.GUIDE, STOPPER 2	1	1	1			
20	5VY–11193–10	GASKET, HEAD COVER 1	1	1	1			
21	5VY–1482K–00	PLATE	4	4	4			
22	5SL–14890–10	REED VALVE ASSY	2	2	2			
23	5VY–14899–00	CAP, CASE	2	2	2			
24	90110–06178	BOLT, HEXAGON SOCKET HEAD	4	4	4			
25	90109–066F0	BOLT	6	6	6			
26	5VY–1111G–00	RUBBER, MOUNT 1	6	6	6			
27	99530–10114	PIN, DOWEL	2	2	2			

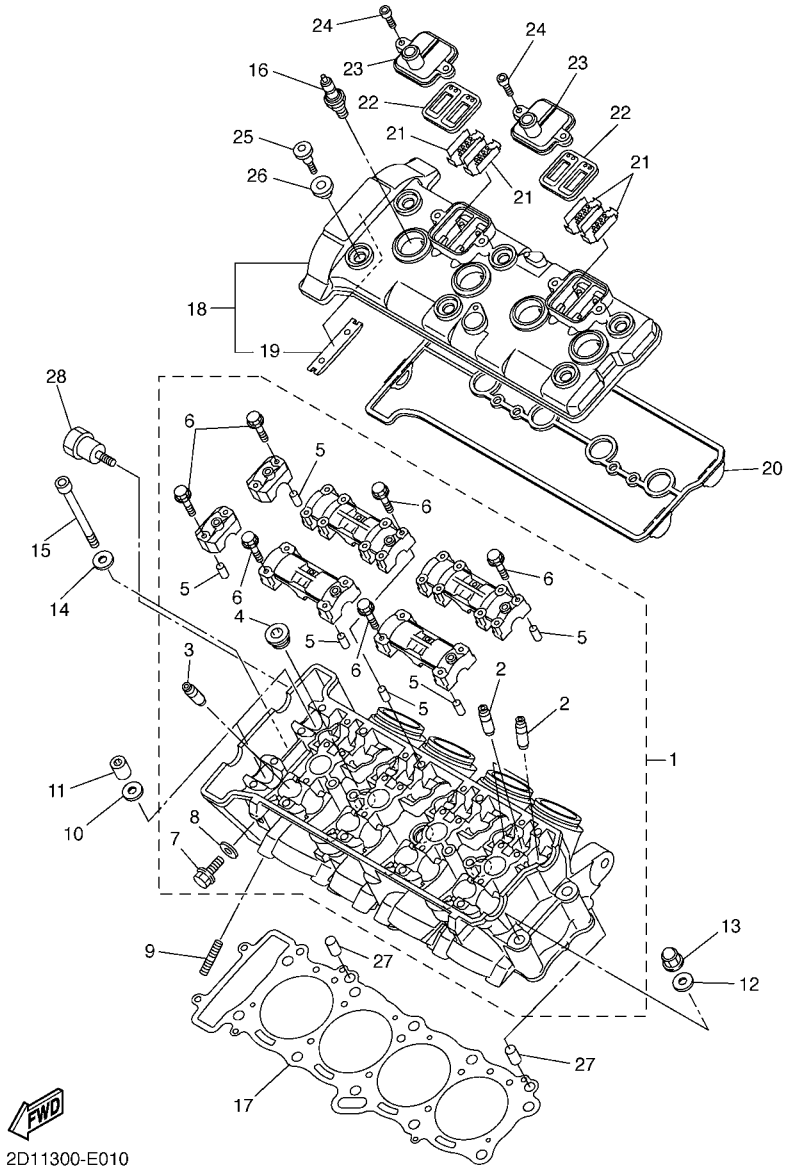

FIG. 1 CYLINDER HEAD

REF. NO.	PART NO.	DESCRIPTION	3C3L	3C3M	3C3N			REMARKS
28	2D1–11026–00	BOLT, MOUNT	1	1	1			

FIG. 2 CYLINDER

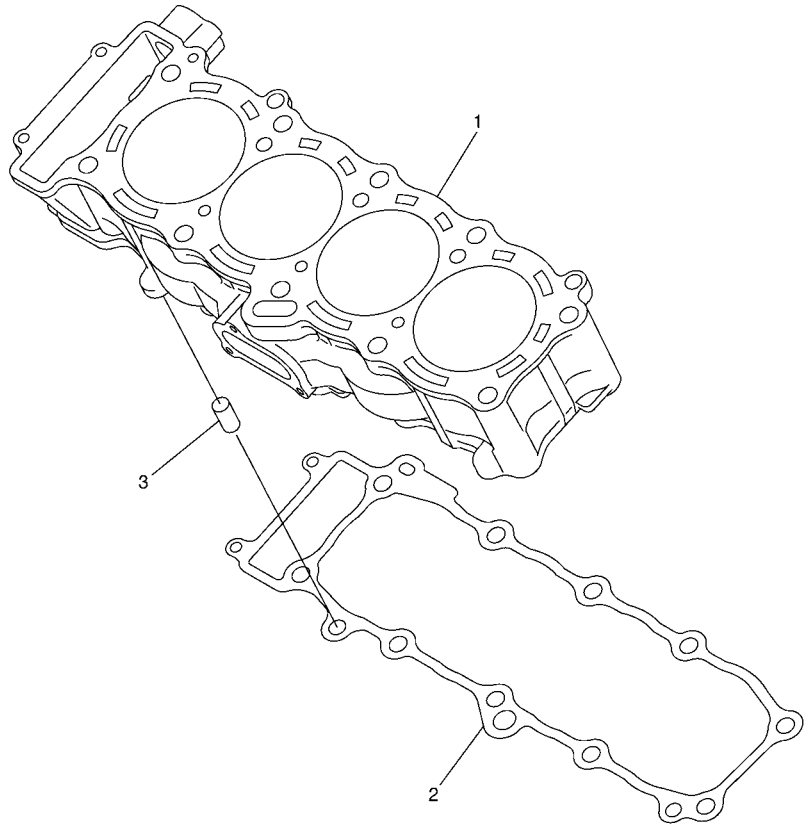

5VY1300-C020

REF. NO.	PART NO.	DESCRIPTION	3C3L	3C3M	3C3N			REMARKS
1	5VY–11311–10	CYLINDER 1	1	1	1			
2	5VY–11351–00	GASKET, CYLINDER	1	1	1			
3	99530–10114	PIN, DOWEL	2	2	2			

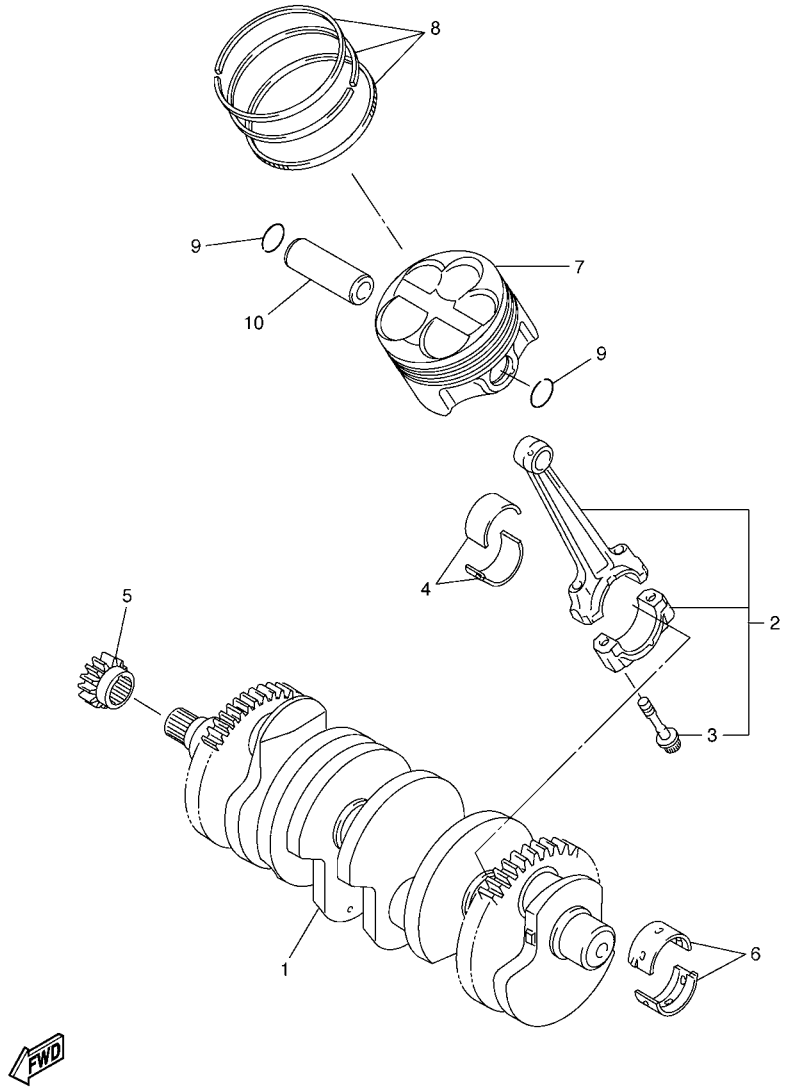

FIG. 3 CRANKSHAFT & PISTON

REF. NO.	PART NO.	DESCRIPTION	3C3L	3C3M	3C3N			REMARKS
1	2D1–11411–00	CRANKSHAFT	1	1	1			
2	4C8–11650–00	CONNECTING ROD ASSY	4	4	4			
3	5VY–11654–01	.BOLT, CONNECTING ROD	2	2	2			
4	2D1–11656–00	PLANE BEARING, CONNECTING ROD	8	8	8			UR BLUE
	2D1–11656–10	PLANE BEARING, CONNECTING ROD	8	8	8			UR BLACK
	2D1–11656–20	PLANE BEARING, CONNECTING ROD	8	8	8			UR BROWN
	2D1–11656–30	PLANE BEARING, CONNECTING ROD	8	8	8			UR GREEN
5	5VY–11549–00	SPROCKET, CAM CHAIN	1	1	1			
6	5VY–11416–A0	PLANE BEARING, CRANKSHAFT 1	10	10	10			UR WHITE
	5VY–11416–00	PLANE BEARING, CRANKSHAFT 1	10	10	10			UR BLUE
	5VY–11416–10	PLANE BEARING, CRANKSHAFT 1	10	10	10			UR BLACK
	5VY–11416–20	PLANE BEARING, CRANKSHAFT 1	10	10	10			UR BROWN
	5VY–11416–30	PLANE BEARING, CRANKSHAFT 1	10	10	10			UR GREEN
7	5VY–11631–10	PISTON (STD)	4	4	4			
8	5VY–11603–01	PISTON RING SET (STD)	4	4	4			
9	93450–18157	CIRCLIP	8	8	8			
10	5VY–11633–00	PIN, PISTON	4	4	4			

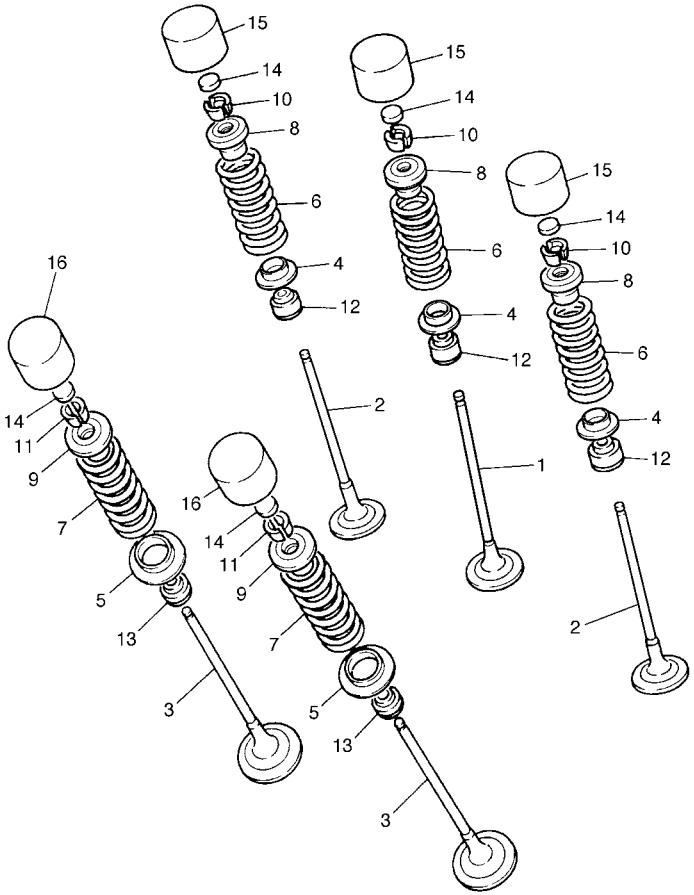

5VY1300-C040

FIG. 4 VALVE

REF. NO.	PART NO.	DESCRIPTION	3C3L	3C3M	3C3N			REMARKS
1	2D1–12111–00	VALVE, INTAKE	4	4	4			
2	2D1–12112–00	VALVE, INTAKE 2	8	8	8			
3	5VY–12121–00	VALVE, EXHAUST	8	8	8			
4	5NL–12116–00	SEAT, VALVE SPRING	12	12	12			
5	3GM–12126–00	SEAT, VALVE SPRING 2	8	8	8			
6	2D1–12113–00	SPRING, VALVE INNER	12	12	12			
7	2D1–12114–00	SPRING, VALVE OUTER	8	8	8			
8	1HX–12117–00	RETAINER, VALVE SPRING	12	12	12			
9	1WG–12117–00	RETAINER, VALVE SPRING	8	8	8			
10	1HX–12118–00	COTTER, VALVE	24	24	24			
11	1WG–12118–00	COTTER, VALVE	16	16	16			
12	4TV–12119–00	SEAL, VALVE STEM	12	12	12			
13	4SV–12119–00	SEAL, VALVE STEM	8	8	8			
14	1HX–12168–00	PAD, ADJUSTING 2 (1.20)	20	20	20			UR
	1HX–12168–20	PAD, ADJUSTING 2 (1.25)	20	20	20			UR
	1HX–12168–40	PAD, ADJUSTING 2 (1.30)	20	20	20			UR
	1HX–12168–60	PAD, ADJUSTING 2 (1.35)	20	20	20			UR
	1HX–12168–80	PAD, ADJUSTING 2 (1.40)	20	20	20			UR
	1HX–12168–A0	PAD, ADJUSTING 2 (1.45)	20	20	20			UR
	1HX–12168–F0	PAD, ADJUSTING 2 (1.50)	20	20	20			UR
	1HX–12168–H1	PAD, ADJUSTING 2 (1.55)	20	20	20			UR
	1HX–12168–K1	PAD, ADJUSTING 2 (1.60)	20	20	20			UR
	1HX–12168–M1	PAD, ADJUSTING 2 (1.65)	20	20	20			UR
	1HX–12168–R1	PAD, ADJUSTING 2 (1.70)	20	20	20			UR
	1HX–12168–U1	PAD, ADJUSTING 2 (1.75)	20	20	20			UR
	1HX–12168–W1	PAD, ADJUSTING 2 (1.80)	20	20	20			UR
	1HX–12168–Y1	PAD, ADJUSTING 2 (1.85)	20	20	20			UR

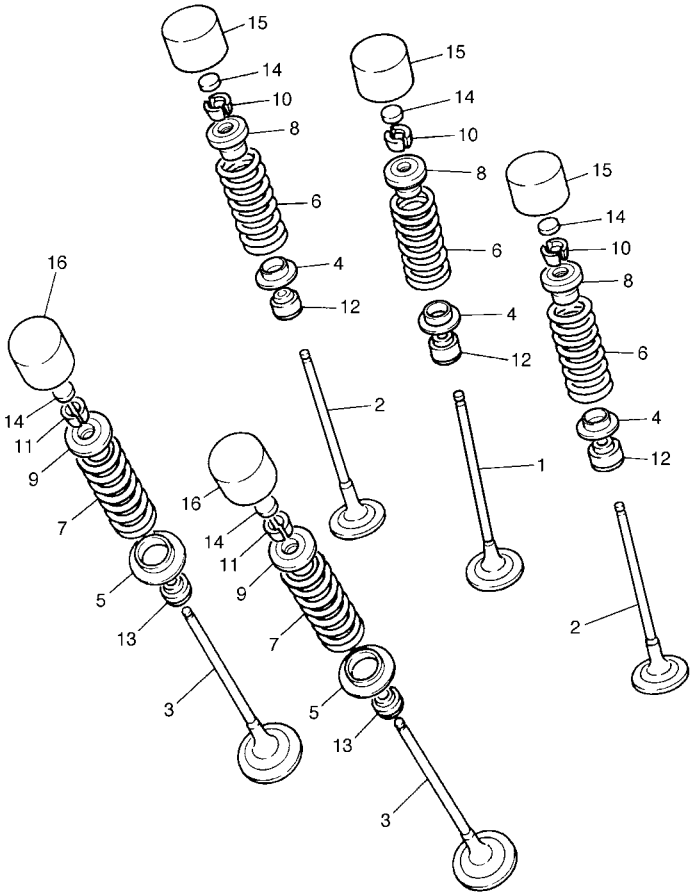

5VY1300-C040

FIG. 4 VALVE

REF. NO.	PART NO.	DESCRIPTION	3C3L	3C3M	3C3N			REMARKS
14	1HX–12169–11	PAD, ADJUSTING 2 (1.90)	20	20	20			UR
	1HX–12169–31	PAD, ADJUSTING 2 (1.95)	20	20	20			UR
	1HX–12169–50	PAD, ADJUSTING 2 (2.00)	20	20	20			UR
	1HX–12169–70	PAD, ADJUSTING 2 (2.05)	20	20	20			UR
	1HX–12169–90	PAD, ADJUSTING 2 (2.10)	20	20	20			UR
	1HX–12169–E0	PAD, ADJUSTING 2 (2.15)	20	20	20			UR
	1HX–12169–G0	PAD, ADJUSTING 2 (2.20)	20	20	20			UR
	1HX–12169–J0	PAD, ADJUSTING 2 (2.25)	20	20	20			UR
	1HX–12169–L0	PAD, ADJUSTING 2 (2.30)	20	20	20			UR
	1HX–12169–N0	PAD, ADJUSTING 2 (2.35)	20	20	20			UR
	1HX–12169–T0	PAD, ADJUSTING 2 (2.40)	20	20	20			UR
15	3LN–12153–20	LIFTER, VALVE	12	12	12			UR BLUE
	3LN–12153–30	LIFTER, VALVE	12	12	12			UR RED
	3LN–12153–09	LIFTER, VALVE (O/S)	12	12	12			UR GREEN
16	3FV–12153–20	LIFTER, VALVE	8	8	8			UR BLUE
	3FV–12153–30	LIFTER, VALVE	8	8	8			UR RED
	3FV–12153–09	LIFTER, VALVE (O/S)	8	8	8			UR GREEN

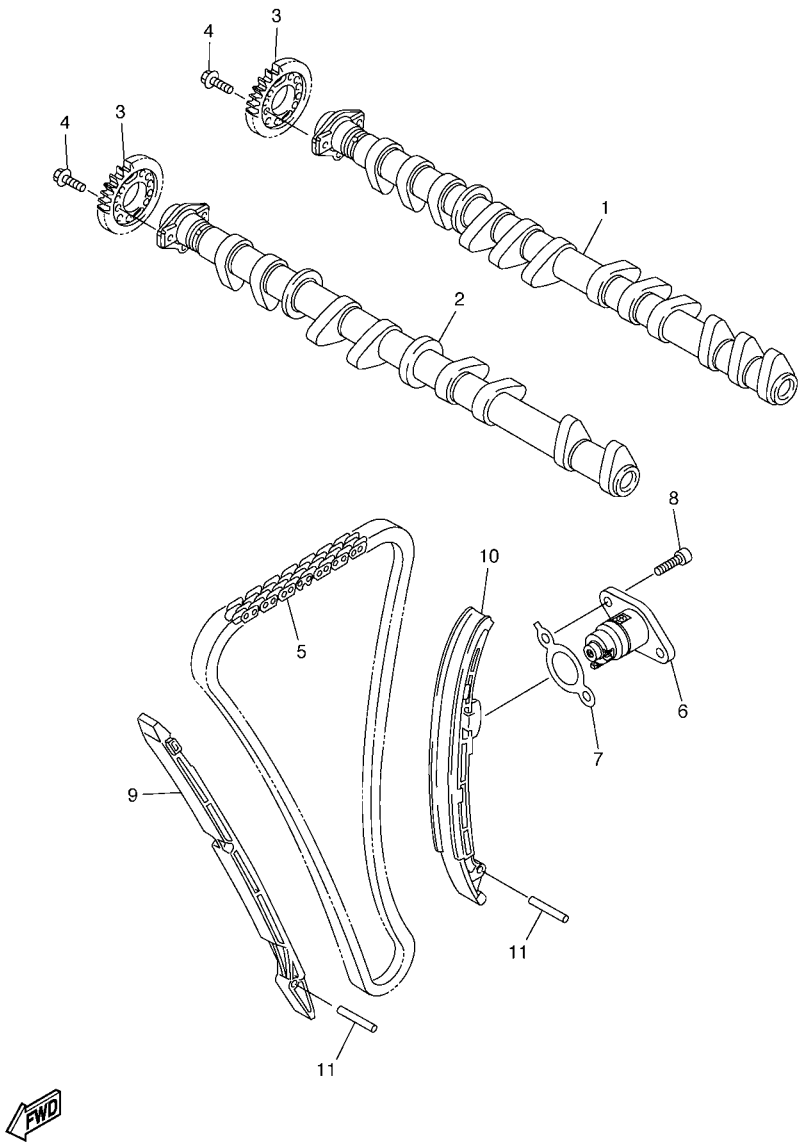

5VYE300-E050

FIG. 5 CAMSHAFT & CHAIN

REF. NO.	PART NO.	DESCRIPTION	3C3L	3C3M	3C3N			REMARKS
1	2D1–12170–00	CAMSHAFT ASSY 1	1	1	1			
2	2D1–12180–00	CAMSHAFT ASSY 2	1	1	1			
3	5VY–12176–00	SPROCKET, CAM CHAIN	2	2	2			
4	90105–07006	BOLT, FLANGE	4	4	4			
5	94591–60122	CHAIN	1	1	1			
6	5VY–12210–20	TENSIONER ASSY, CAM CHAIN	1	1	1			
7	2D1–12213–00	GASKET, TENSIONER CASE	1	1	1			
8	91314–06020	BOLT	2	2	2			
9	5VY–12251–00	DAMPER, CHAIN 1	1	1	1			
10	5VY–12252–01	DAMPER, CHAIN 2	1	1	1			
11	93607–44002	PIN, DOWEL	2	2	2			

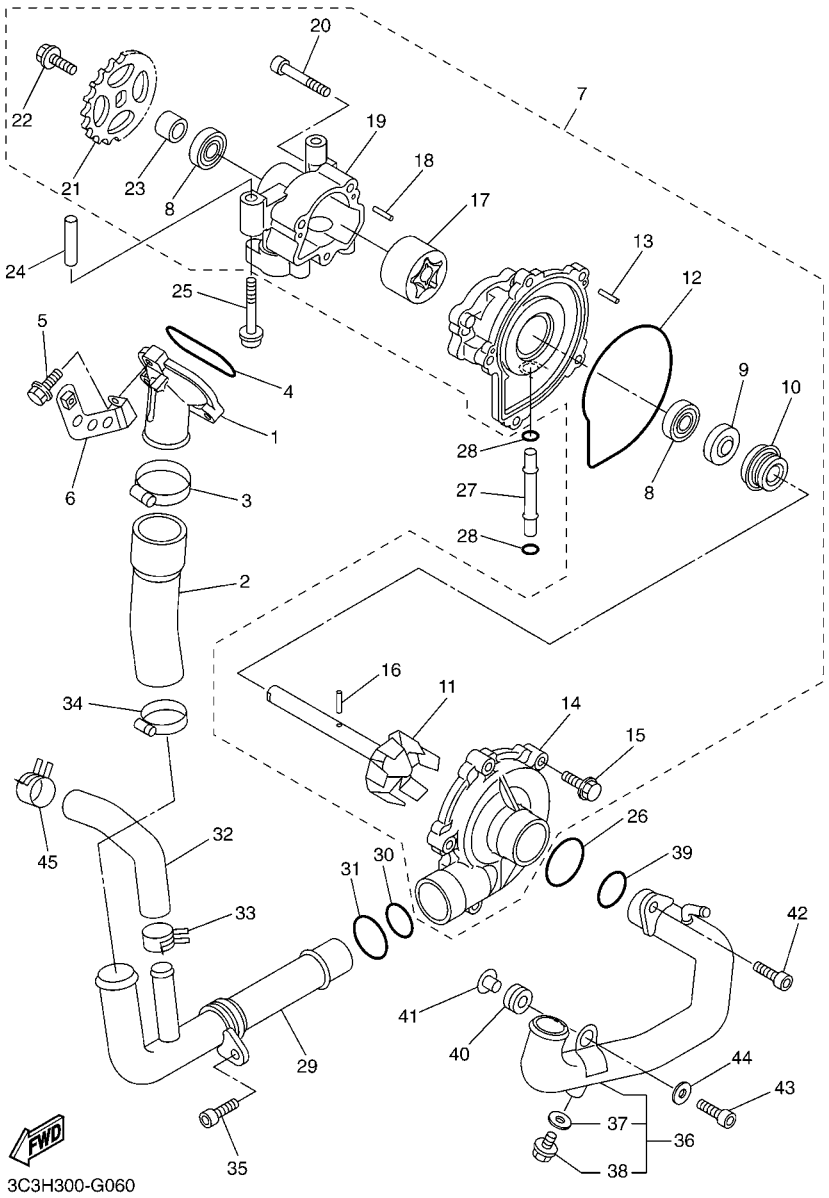

FIG. 6 WATER PUMP

REF. NO.	PART NO.	DESCRIPTION	3C3L	3C3M	3C3N			REMARKS
1	5VY–12469–00	JOINT 1	1	1	1			
2	5VY–12576–00	HOSE 1	1	1	1			
3	90450–38040	HOSE CLAMP ASSY	1	1	1			
4	93210–47675	O-RING	1	1	1			
5	95024–06025	BOLT, FLANGE	3	3	3			
6	2D1–12637–00	STAY 1	1	1	1			
7	5VY–12420–10	WATER PUMP ASSY	1	1	1			
8	93306–00106	.BEARING	2	2	2			
9	93102–12372	.OIL SEAL	1	1	1			
10	11H–12438–10	.SEAL, MECHANICAL	1	1	1			
11	5VY–12450–11	.IMPELLER SHAFT ASSY	1	1	1			
12	4XV–12439–00	.O-RING	1	1	1			
13	93603–12007	.PIN, DOWEL	2	2	2			
14	5VY–12422–00	.COVER, HOUSING	1	1	1			
15	90105–06065	.BOLT, FLANGE	5	5	5			
16	93603–17070	.PIN, DOWEL	1	1	1			
17	5VY–13310–10	.ROTOR ASSY 1	1	1	1			
18	93603–12007	.PIN, DOWEL	2	2	2			
19	5VY–13336–00	.HOUSING, ROTOR	1	1	1			
20	91312–06040	.BOLT	3	3	3			
21	5VY–13355–00	.SPROCKET, DRIVEN	1	1	1			
22	90105–06066	.BOLT, FLANGE	1	1	1			
23	5VY–12456–10	.WASHER	1	1	1			
24	91808–30031	PIN, DOWEL	1	1	1			
25	90110–06167	BOLT, HEXAGON SOCKET HEAD	2	2	2			
26	93210–357A2	O-RING	1	1	1			
27	4XV–12485–00	PIPE 5	1	1	1			

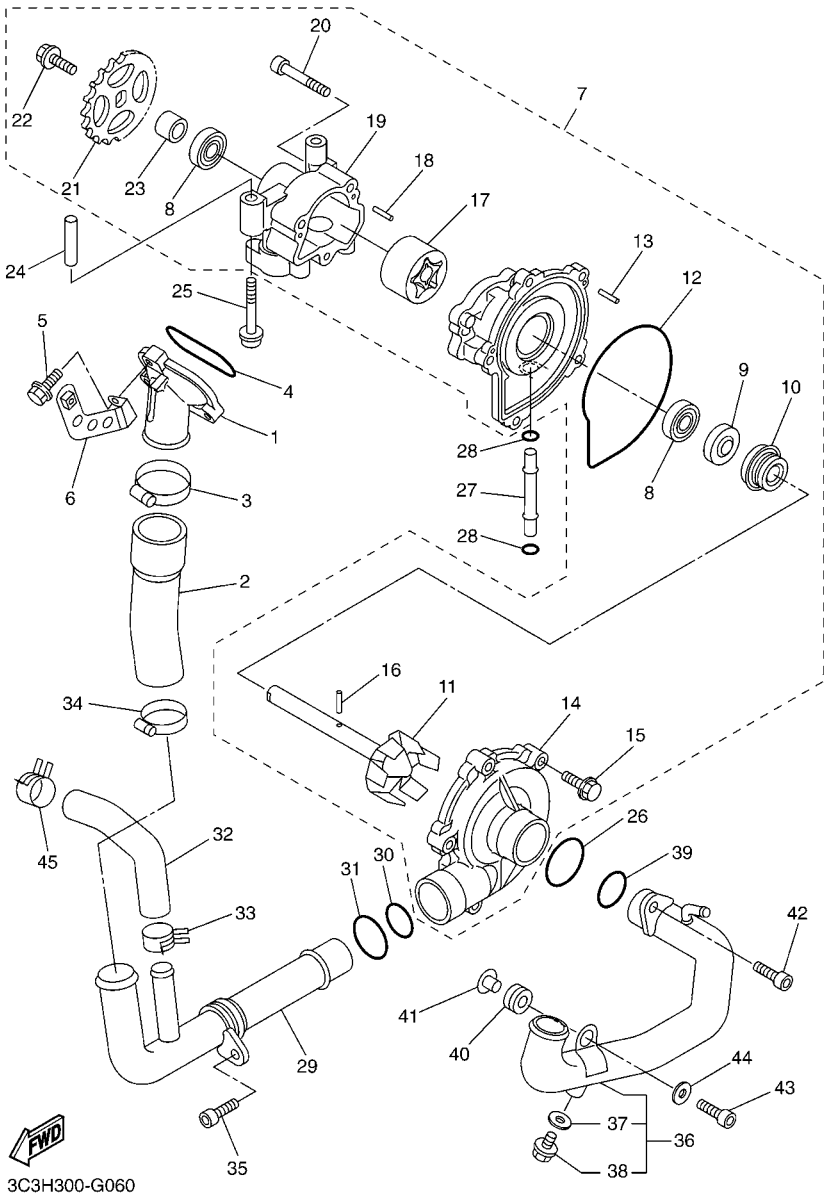

FIG. 6 WATER PUMP

REF. NO.	PART NO.	DESCRIPTION	3C3L	3C3M	3C3N			REMARKS
28	93210–06667	O-RING	2	2	2			
29	5VY–12481–10	PIPE 1	1	1	1			
30	93210–235A1	O-RING	1	1	1			
31	93210–27370	O-RING	1	1	1			
32	5VY–12588–00	HOSE 5	1	1	1			
33	90467–200A0	CLIP	1	1	1			
34	90450–32001	HOSE CLAMP ASSY	1	1	1			
35	90110–06161	BOLT, HEXAGON SOCKET HEAD	1	1	1			
36	2D1–12484–00	PIPE 4	1	1	1			
37	90430–06014	.GASKET	1	1	1			
38	90153–06002	.SCREW, HEXAGON	1	1	1			
39	93210–235A1	O-RING	1	1	1			
40	90480–12010	GROMMET	1	1	1			
41	90387–06112	COLLAR	1	1	1			
42	90110–06161	BOLT, HEXAGON SOCKET HEAD	1	1	1			
43	90110–06174	BOLT, HEXAGON SOCKET HEAD	1	1	1			
44	90201–06079	WASHER, PLATE	1	1	1			
45	90467–200A0	CLIP	1	1	1			

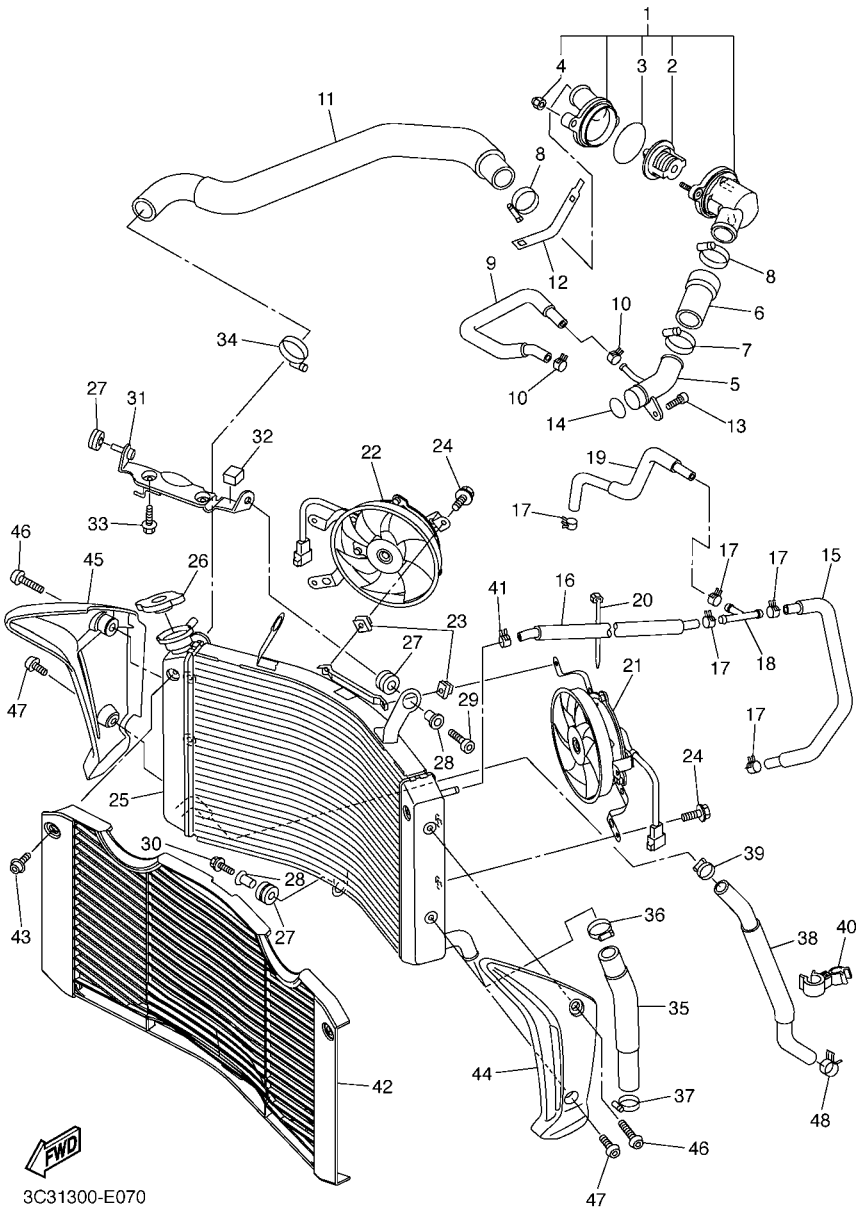

FIG. 7 RADIATOR & HOSE

REF. NO.	PART NO.	DESCRIPTION	3C3L	3C3M	3C3N			REMARKS
1	2D1–12410–00	THERMOSTAT ASSY	1	1	1			
2	5LP–12411–00	.THERMOSTAT	1	1	1			
3	93210–49046	.O-RING	1	1	1			
4	90176–06014	.NUT, CROWN	2	2	2			
5	5VY–12485–10	PIPE 5	1	1	1			
6	5VY–12579–00	HOSE 4	1	1	1			
7	90450–35001	HOSE CLAMP ASSY	1	1	1			
8	90450–38040	HOSE CLAMP ASSY	2	2	2			
9	5VY–1243F–00	HOSE,3	1	1	1			
10	90467–11090	CLIP	2	2	2			
11	2D1–12578–00	HOSE 3	1	1	1			
12	5GV–1246A–00	COVER 1	1	1	1			
13	90110–06168	BOLT, HEXAGON SOCKET HEAD	1	1	1			
14	93210–235A1	O-RING	1	1	1			
15	5VY–1243A–00	HOSE 1	1	1	1			
16	2D1–1244G–00	HOSE, 4	1	1	1			
17	90467–11090	CLIP	5	5	5			
18	90413–07023	WAY 3	1	1	1			
19	2D1–1243E–00	HOSE 2	1	1	1			
20	90464–13073	CLAMP	1	1	1			
21	2D1–12405–00	BLOWER ASSY	1	1	1			
22	2D1–12405–10	BLOWER ASSY	1	1	1			
23	1AA–12535–00	PLATE	2	2	2			
24	2D1–12675–00	BOLT, BLOWER HOLDING	6	6	6			
25	2D1–12461–00	RADIATOR ASSY	1	1	1			
26	22W–12462–00	CAP, RADIATOR	1	1	1			
27	90480–15363	GROMMET	3	3	3			

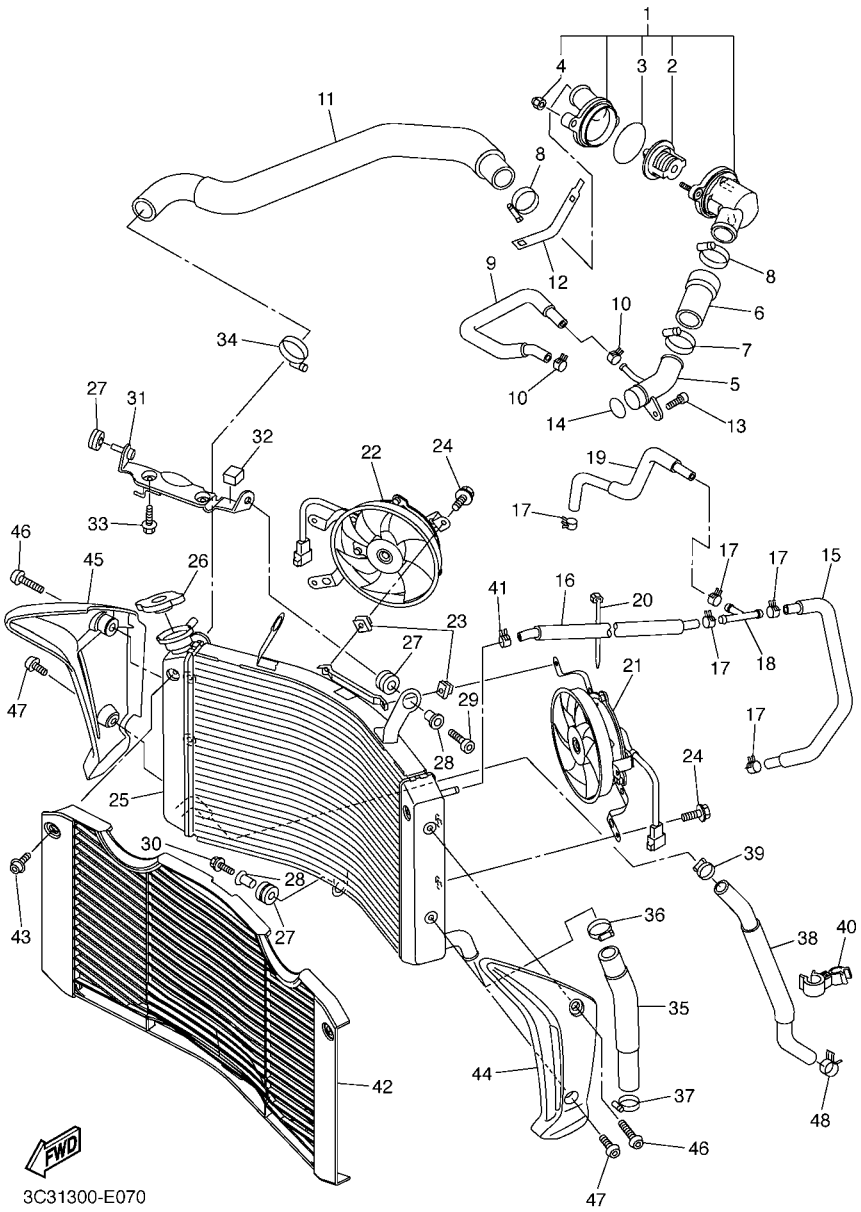

FIG. 7 RADIATOR & HOSE

REF. NO.	PART NO.	DESCRIPTION	3C3L	3C3M	3C3N			REMARKS
28	90387–07391	COLLAR	2	2	2			
29	90109–06015	BOLT	1	1	1			
30	90109–067E6	BOLT	1	1	1			
31	2D1–12464–00	STAY, RADIATOR	1	1	1			
32	2D1–2139U–00	DAMPER 2	1	1	1			
33	95807–06012	BOLT, FLANGE	2	2	2			
34	90450–35001	HOSE CLAMP ASSY	1	1	1			
35	2D1–12551–00	HOSE 7	1	1	1			
36	90450–35001	HOSE CLAMP ASSY	1	1	1			
37	90450–32001	HOSE CLAMP ASSY	1	1	1			
38	2D1–12589–00	HOSE 6	1	1	1			
39	90450–22017	HOSE CLAMP ASSY	1	1	1			
40	90464–23002	CLAMP	1	1	1			
41	90467–11090	CLIP	1	1	1			
42	2D1–12467–00	COVER, RADIATOR	1	1	1			
43	90111–06031	BOLT,HEX. SOCKET BUTTON	2	2	2			
44	3C3–1240J–00–P1	RADIATOR COVER ASSY1	1	1	1			S8
45	3C3–1240K–00–P1	RADIATOR COVER ASSY 2	1	1	1			S8
46	90111–06080	BOLT,HEX. SOCKET BUTTON	2	2	2			
47	90111–06079	BOLT,HEX. SOCKET BUTTON	2	2	2			
48	90467–200A0	CLIP	1	1	1			

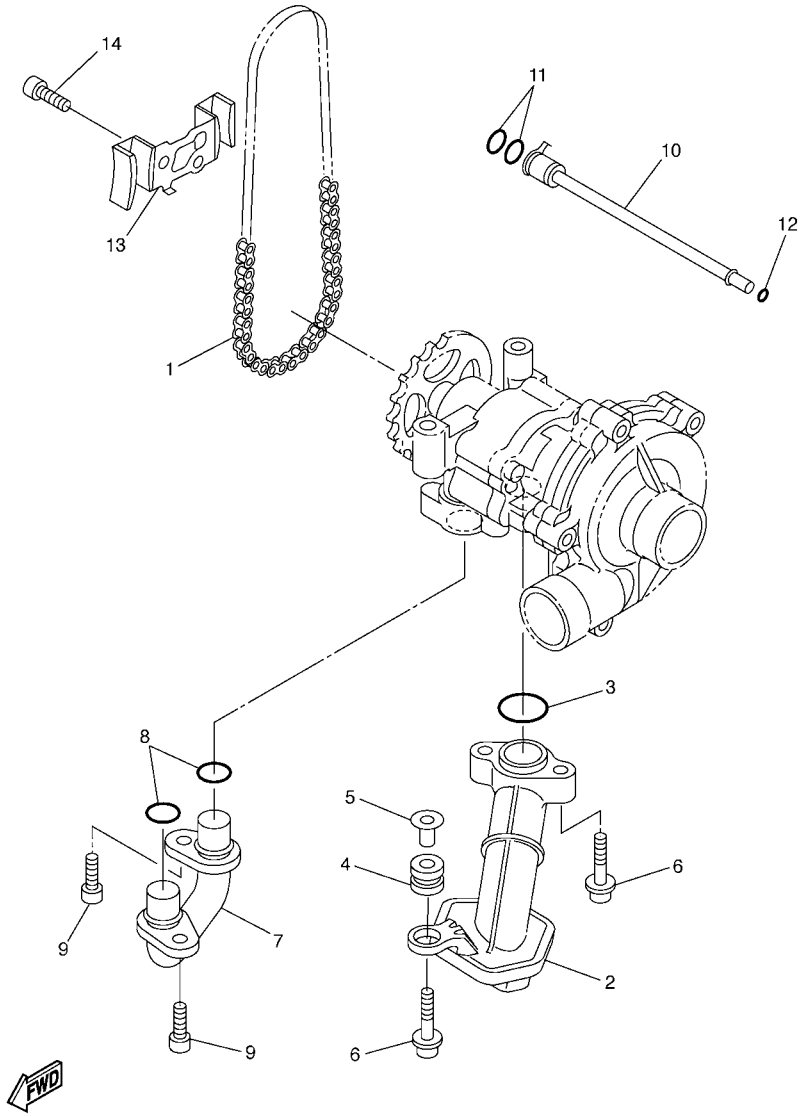

5VY1300-C080

FIG. 8 OIL PUMP

REF. NO.	PART NO.	DESCRIPTION	3C3L	3C3M	3C3N			REMARKS
1	94580–25078	CHAIN (DID25 78LE)	1	1	1			
2	5VY–13410–00	STRAINER HOUSING ASSY	1	1	1			
3	93210–22298	O-RING	1	1	1			
4	90480–13010	GROMMET	1	1	1			
5	5VY–13117–10	COLLAR, DISTANCE	1	1	1			
6	90110–06173	BOLT, HEXAGON SOCKET HEAD	3	3	3			
7	5VY–13416–00	PIPE, OIL 1	1	1	1			
8	93210–14003	O-RING	2	2	2			
9	90110–06161	BOLT, HEXAGON SOCKET HEAD	2	2	2			
10	5VY–1316E–00	PIPE, DELIVERY 5	1	1	1			
11	93210–09165	O-RING	2	2	2			
12	93210–06667	O-RING	1	1	1			
13	5VY–13898–00	HOLDER	1	1	1			
14	90110–06182	BOLT, HEXAGON SOCKET HEAD	2	2	2			

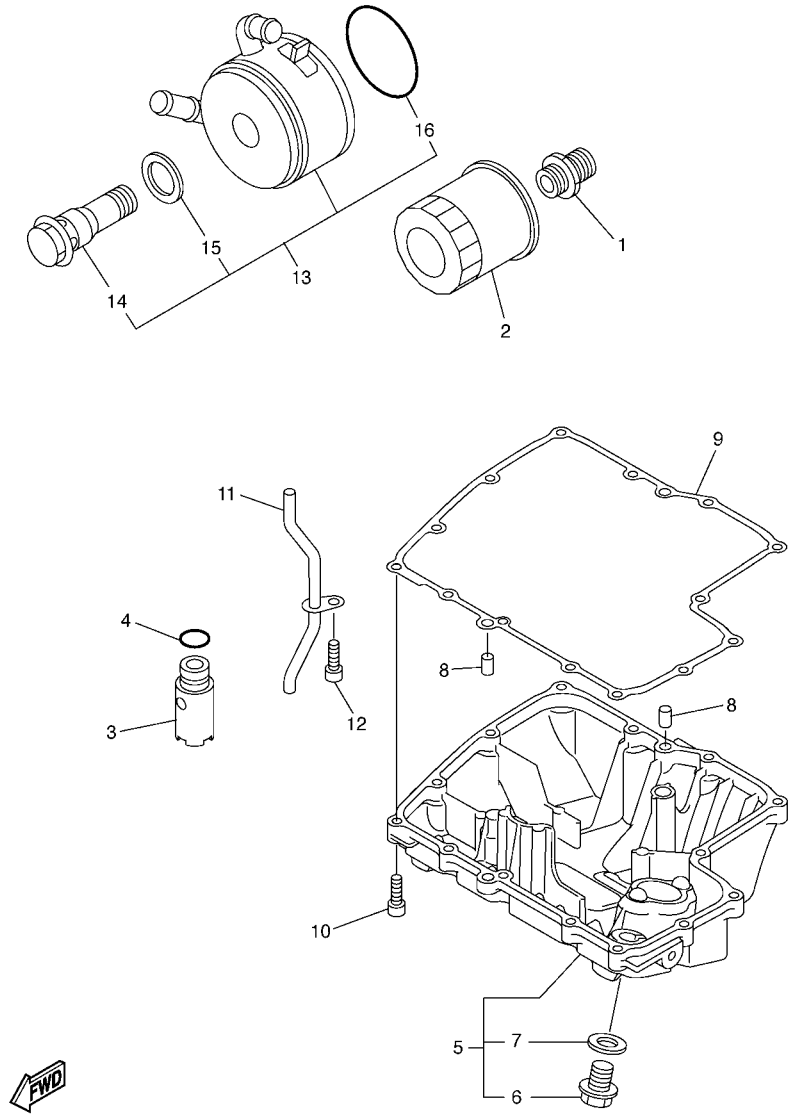

FIG. 9 OIL CLEANER

REF. NO.	PART NO.	DESCRIPTION	3C3L	3C3M	3C3N			REMARKS
1	90401–20145	BOLT, UNION	1	1	1			
2	5GH–13440–20	ELEMENT ASSY, OIL CLEANER	1	1	1			
3	5VY–13490–00	RELIEF VALVE ASSY	1	1	1			
4	93210–15566	O-RING	1	1	1			
5	2D1–13417–10	COVER, STRAINER	1	1	1			
6	90340–14132	.PLUG, STRAIGHT SCREW	1	1	1			
7	214–11198–01	.GASKET	1	1	1			
8	99530–08012	PIN, DOWEL	2	2	2			
9	4C8–13414–00	GASKET, STRAINER COVER	1	1	1			
10	91312–06025	BOLT	14	14	14			
11	5VY–13161–00	PIPE, DELIVERY 1	1	1	1			
12	90110–06182	BOLT, HEXAGON SOCKET HEAD	1	1	1			
13	5VY–13470–00	OIL COOLER ASSY	1	1	1			
14	5EB–12822–00	.BOLT, UNION	1	1	1			
15	5EB–13475–00	.GASKET	1	1	1			
16	5JW–13473–00	.O-RING	1	1	1			

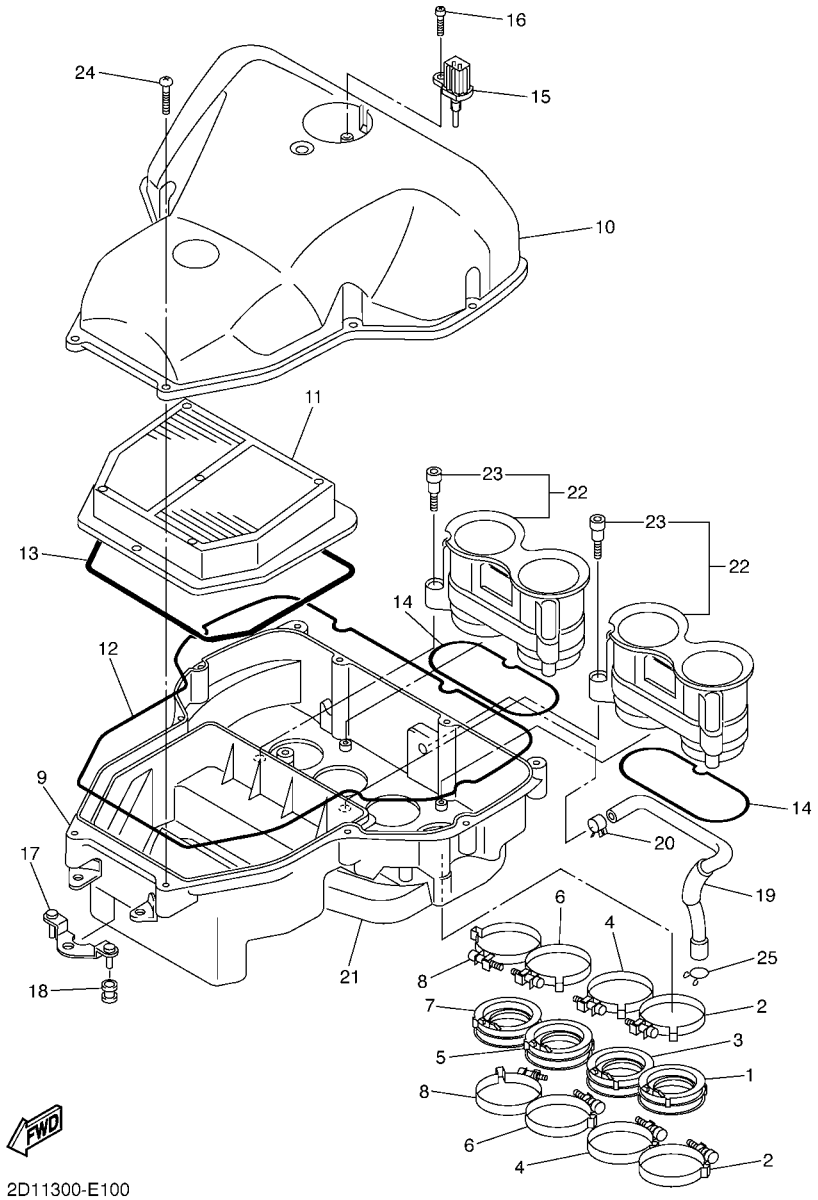

FIG. 10 INTAKE

REF. NO.	PART NO.	DESCRIPTION	3C3L	3C3M	3C3N			REMARKS
1	5VY–13595–00	JOINT	1	1	1			
2	90450–62002	HOSE CLAMP ASSY	2	2	2			
3	5VY–13596–00	JOINT, CARBURETOR 2	1	1	1			
4	90450–62002	HOSE CLAMP ASSY	2	2	2			
5	5VY–13597–00	JOINT, CARBURETOR 3	1	1	1			
6	90450–62002	HOSE CLAMP ASSY	2	2	2			
7	5VY–13598–00	JOINT, CARBURETOR 4	1	1	1			
8	90450–62002	HOSE CLAMP ASSY	2	2	2			
9	2D1–14411–00	CASE, AIR CLEANER 1	1	1	1			
10	2D1–14421–00	CASE, AIR CLEANER 2	1	1	1			
11	2D1–14451–00	ELEMENT, AIR CLEANER	1	1	1			
12	2D1–14452–00	SEAL	1	1	1			
13	2D1–14462–00	SEAL	1	1	1			
14	5VY–14457–00	SEAL	2	2	2			
15	8FP–85886–00	SENSOR, AIR TEMPERATURE	1	1	1			
16	97702–50520	SCREW, TAPPING	1	1	1			
17	2D1–14498–00	STAY 1	1	1	1			
18	90480–08264	GROMMET	2	2	2			
19	2D1–15393–00	PIPE, BREATHER 2	1	1	1			
20	90467–14171	CLIP	1	1	1			
21	2D1–14409–00	DAMPER	1	1	1			
22	2D1–1440B–00	JOINT ASSY	2	2	2			
23	90109–05005	.BOLT	3	3	3			
24	97702–50025	SCREW, TAPPING	11	11	11			
25	90467–14015	CLIP	1	1	1			

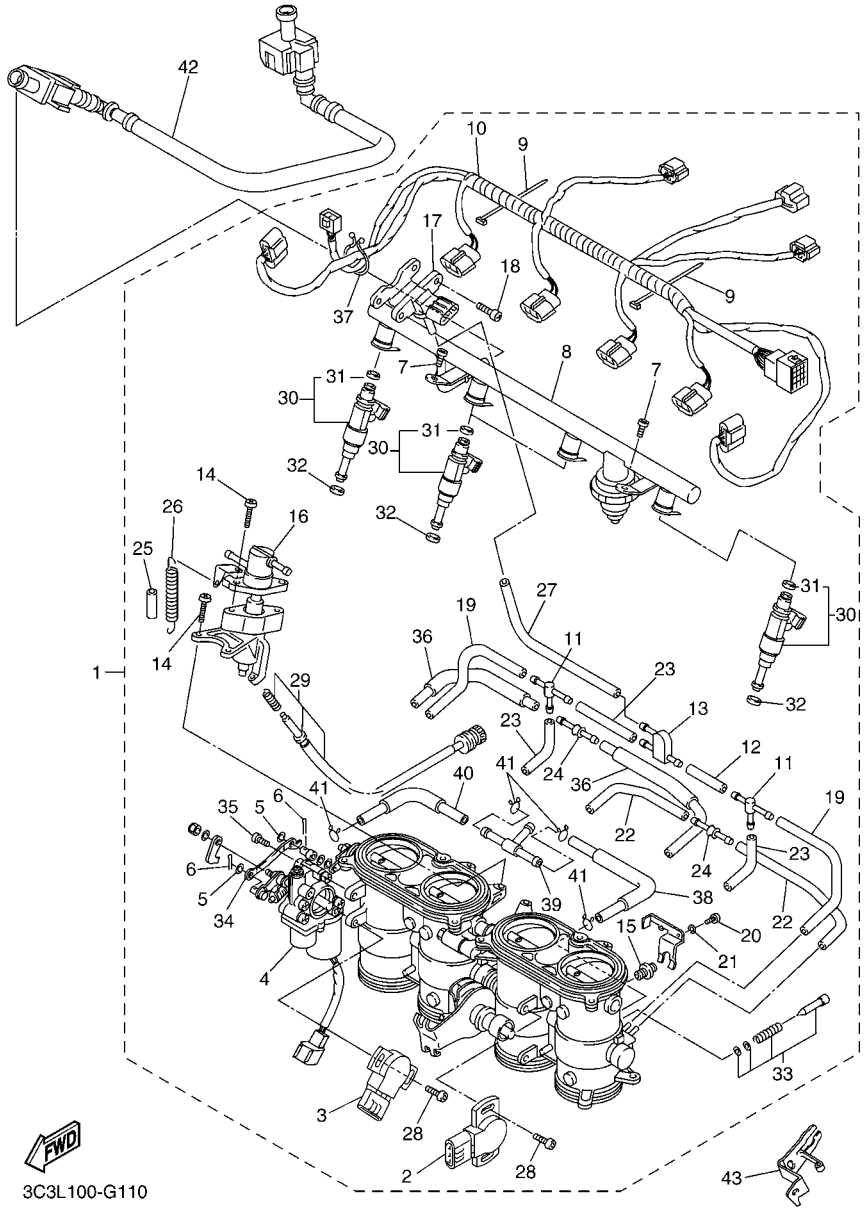

FIG. 11 INTAKE 2

REF. NO.	PART NO.	DESCRIPTION	3C3L	3C3M	3C3N			REMARKS
1	2D1–13750–20	THROTTLE BODY ASSY	1		1			
	3C3–13750–10	THROTTLE BODY ASSY		1				
2	2D1–85885–00	.THROTTLE SENSOR ASSY	1	1	1			
3	5FL–85885–02	.THROTTLE SENSOR ASSY	1	1	1			
4	5VY–85850–00	.GEARED MOTOR COMP.	1	1	1			
5	22U–14952–00	.WASHER	2	2	2			
6	91492–12010	.PIN, COTTER	2	2	2			
7	98502–06012	.SCREW, PAN HEAD	2	2	2			
8	2D1–13160–00	.DELIVERY PIPE ASSY 1	1	1	1			
9	4KM–14137–00	.CLIP	5	5	5			
10	2D1–82386–00	.EXTENSION, WIRE HARNESS	1	1	1			
11	68V–24376–00	.PIPE, JOINT 1	2	2	2			
12	5JW–14396–00	.PIPE	1	1	1			
13	3XV–14251–00	.NIPPLE	1	1	1			
14	98502–05014	.SCREW, PAN HEAD	4	4	4			
15	5VY–14171–00	.PLUNGER, STARTER	2	2	2			
16	5VY–14204–00	.CASE, STARTER	1	1	1			
17	1C7–82380–00	.SENSOR, PRESSURE	1	1	1			
18	92502–06010	.SCREW, PAN HEAD	2	2	2			
19	5FL–14349–10	.PIPE	2	2	2			
20	98507–03016	.SCREW, PAN HEAD	4	4	4			
21	92990–03100	.WASHER, SPRING	4	4	4			
22	5PW–14349–00	.PIPE	2	2	2			
23	5PS–14987–00	.HOSE	3	3	3			
24	5PW–14251–00	.NIPPLE	2	2	2			
25	5DM–14936–00	.SEAT, SPRING	1	1	1			
26	5JW–14589–00	.SPRING	1	1	1			

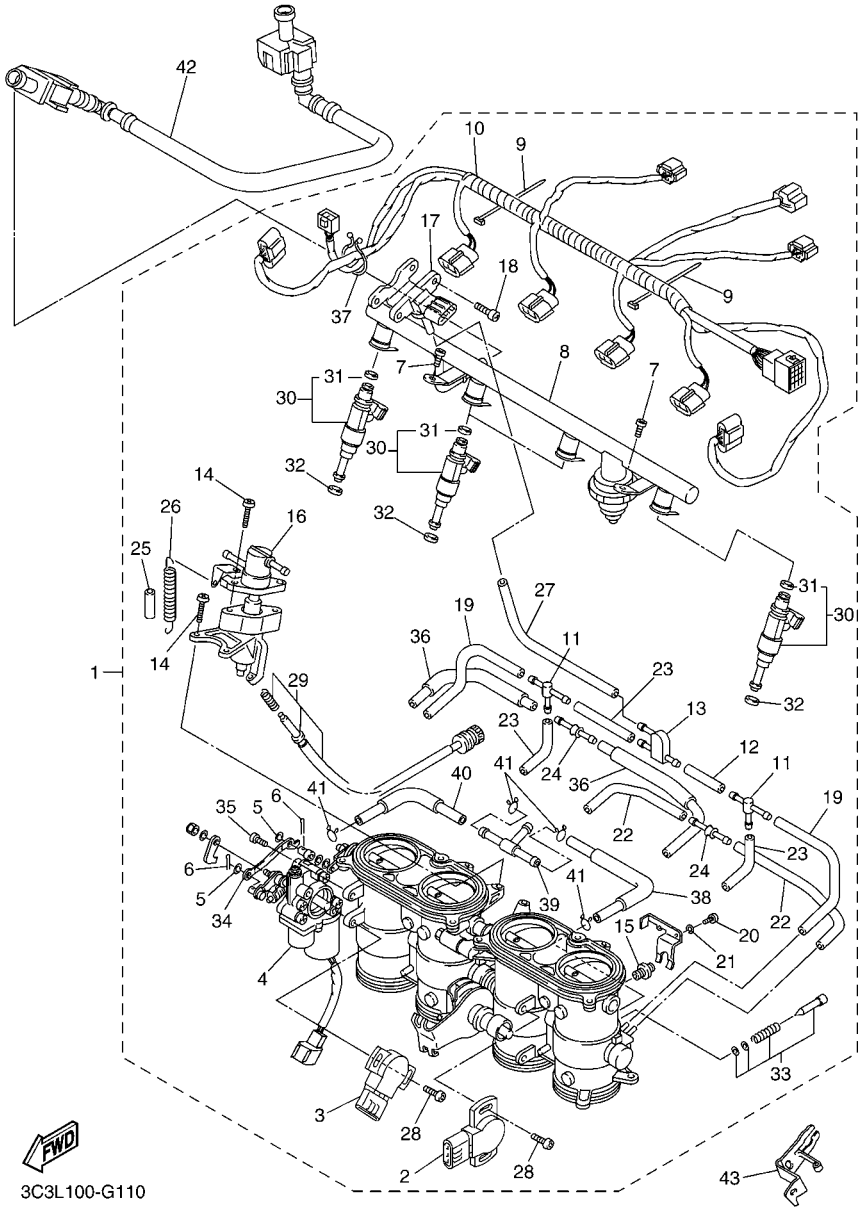

FIG. 11 INTAKE 2

REF. NO.	PART NO.	DESCRIPTION	3C3L	3C3M	3C3N			REMARKS
27	5SL–14349–00	.PIPE	1	1	1			
28	8CC–14216–10	.SCREW	4	4	4			
29	5PW–14103–00	.THROTTLE SCREW SET	1	1	1			
30	5VY–13761–00	.INJECTOR	4	4	4			
31	5PS–14147–00	..O-RING	1	1	1			
32	8FP–13556–00	.GASKET, MANIFOLD	4	4	4			
33	5JW–14104–00	.AIR SCREW SET	2	2	2			
34	5VY–14905–00	.LEVER, STARTER	1	1	1			
35	98507–06020	.SCREW, PAN HEAD	2	2	2			
36	5VY–13543–00	.HOSE, AIR	2	2	2			
37	90464–30040	.CLAMP	1	1	1			
38	5VY–14465–01	.PIPE		1				
39	90413–08012	.WAY 3		1				
40	5VY–14466–01	.PIPE		1				
41	90467–09006	.CLIP		4				
42	2D1–13971–00	PIPE, FUEL 1	1	1	1			
43	2D1–14413–00	STAY	1	1	1			

FIG. 12 AIR INDUCTION SYSTEM

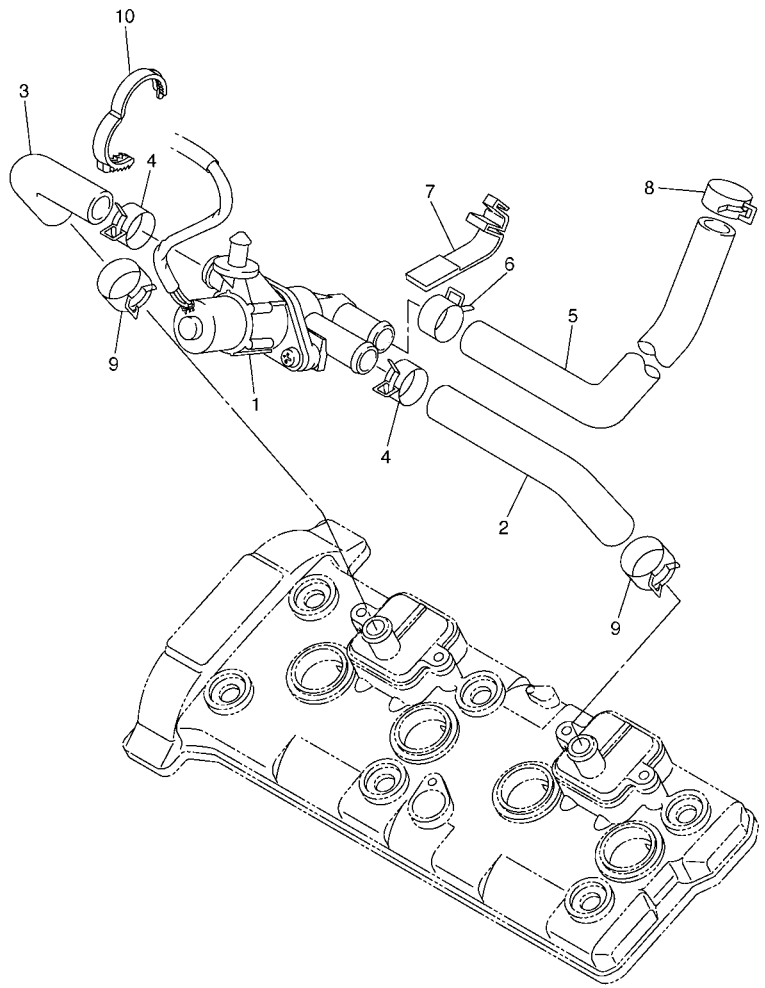

2D11300-E120

REF. NO.	PART NO.	DESCRIPTION	3C3L	3C3M	3C3N			REMARKS
1	2D1–14840–00	AIR CUT VALVE ASSY	1	1	1			
2	5VY–14881–00	HOSE, BEND 1	1	1	1			
3	5VY–14882–00	HOSE, BEND 2	1	1	1			
4	90467–18172	CLIP	2	2	2			
5	5VY–14883–00	HOSE, BEND 3	1	1	1			
6	90467–18172	CLIP	1	1	1			
7	5JW–14723–00	COVER 1	2	2	2			
8	90467–17128	CLIP	1	1	1			
9	90467–180A0	CLIP	2	2	2			
10	90464–28003	CLAMP	1	1	1			

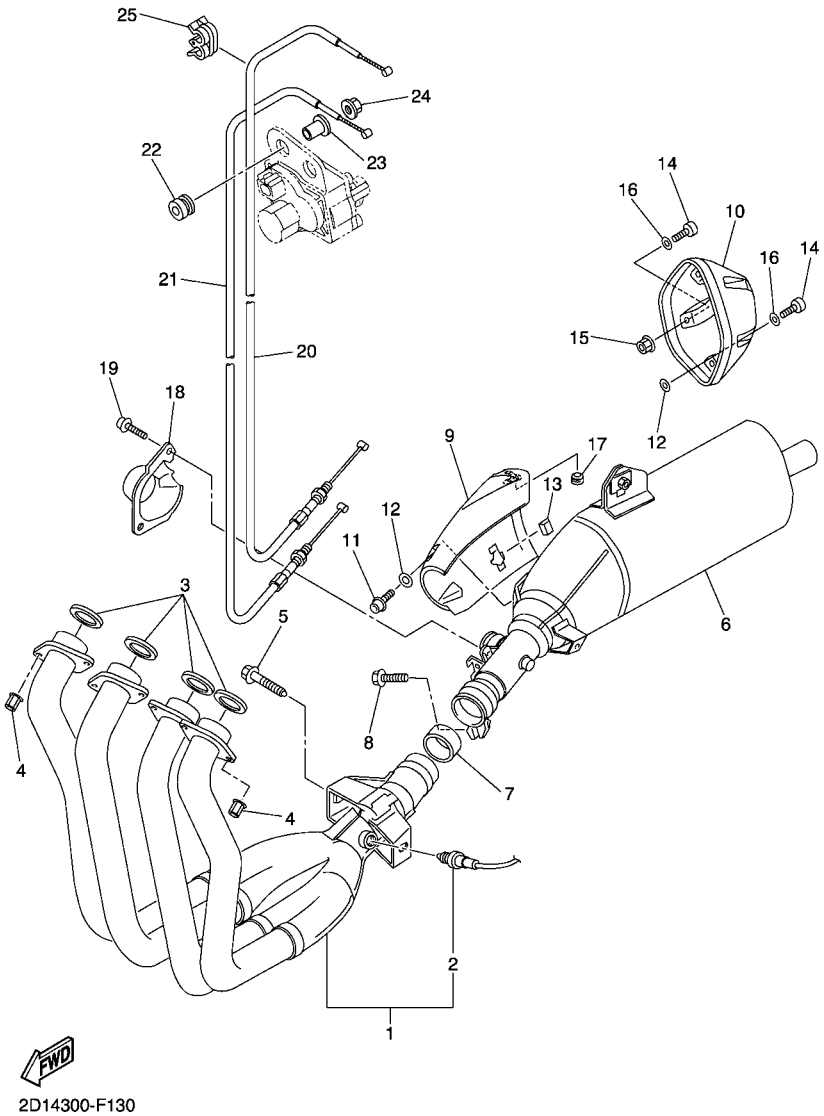

FIG. 13 EXHAUST

REF. NO.	PART NO.	DESCRIPTION	3C3L	3C3M	3C3N			REMARKS
1	2D1–14602–10	EXHAUST PIPE COMP.	1	1	1			
2	2D1–8592A–00	.SENSOR, OXYGEN	1	1	1			
3	4FM–14613–00	GASKET, EXHAUST PIPE	4	4	4			
4	90179–08410	NUT	8	8	8			
5	90109–08170	BOLT	2	2	2			
6	2D1–14703–00	MUFFLER COMP. 1	1	1	1			
7	5VY–14755–00	GASKET, SILENCER	1	1	1			
8	95814–08030	BOLT, FLANGE	1	1	1			
9	2D1–14718–10	PROTECTOR, MUFFLER 1	1	1	1			
10	2D1–14799–00	CAP	1	1	1			
11	90111–06060	BOLT,HEX. SOCKET BUTTON	2	2	2			
12	90201–05017	WASHER, PLATE	6	6	6			
13	3MA–24181–00	DAMPER, LOCATING 1	2	2	2			
14	91380–06014	BOLT	5	5	5			
15	95702–06500	NUT, WITH WASHER	1	1	1			
16	92990–06600	WASHER, PLATE	5	5	5			
17	2D1–14737–00	DAMPER, MUFFLER	1	1	1			
18	2D1–14826–00	PROTECTOR, EXHAUST	1	1	1			
19	90110–06110	BOLT, HEXAGON SOCKET HEAD	2	2	2			
20	2D1–1133E–01	CABLE, PULLEY 1	1	1	1			
21	2D1–1133F–11	CABLE, PULLEY 2	1	1	1			
22	90480–14604	GROMMET	2	2	2			
23	90387–06M60	COLLAR	1	1	1			
24	95702–06500	NUT, WITH WASHER	1	1	1			
25	90464–04001	CLAMP	1	1	1			

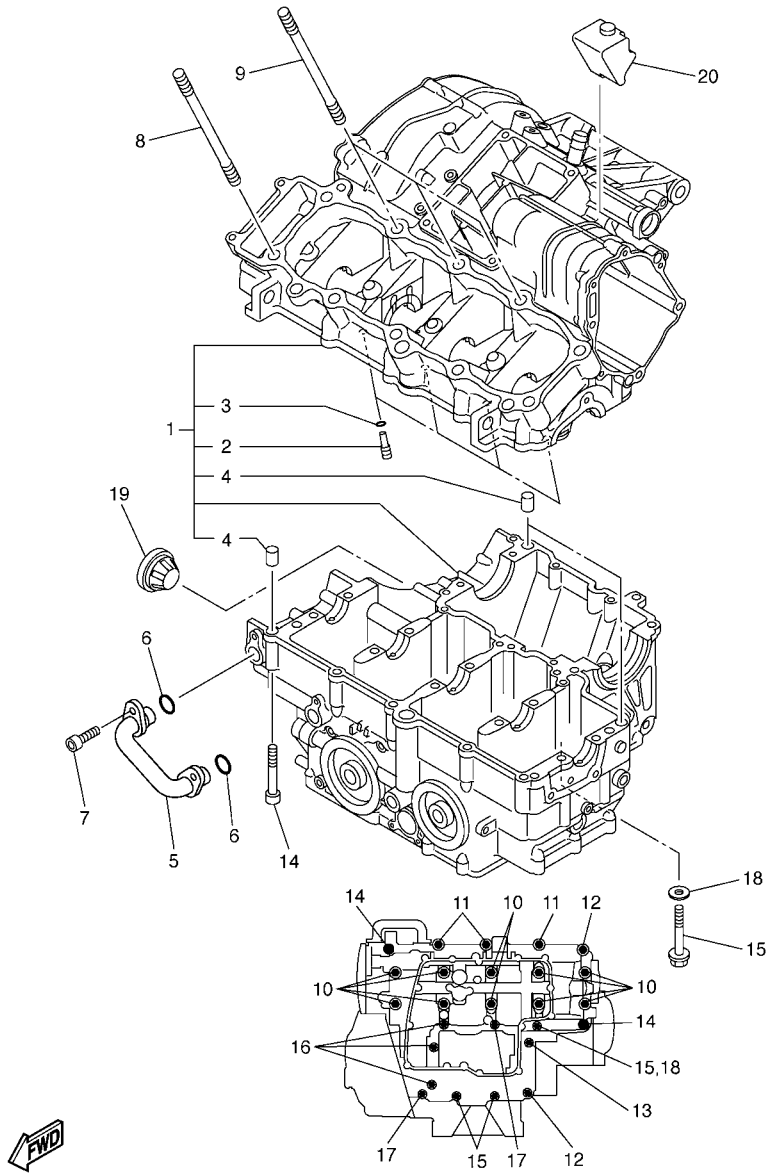

5VY1300-C140

FIG. 14 CRANKCASE

REF. NO.	PART NO.	DESCRIPTION	3C3L	3C3M	3C3N			REMARKS
1	4C8–15100–00	CRANKCASE ASSY	1	1	1			
2	5EB–15155–00	.NOZZLE 3	4	4	4			
3	93210–04092	.O-RING	4	4	4			
4	99530–10014	.PIN, DOWEL	3	3	3			
5	5VY–13418–10	PIPE, OIL 2	1	1	1			
6	93210–14003	O-RING	2	2	2			
7	90110–06161	BOLT, HEXAGON SOCKET HEAD	2	2	2			
8	90116–10032	BOLT, STUD	7	7	7			
9	90116–10023	BOLT, STUD	3	3	3			
10	90119–09003	BOLT, WITH WASHER	10	10	10			
11	95812–08050	BOLT, FLANGE	3	3	3			
12	95812–08060	BOLT, FLANGE	2	2	2			
13	90105–08101	BOLT, FLANGE	1	1	1			
14	90109–06100	BOLT	2	2	2			
15	95812–06060	BOLT, FLANGE	3	3	3			
16	95812–06070	BOLT, FLANGE	3	3	3			
17	95812–06050	BOLT, FLANGE	2	2	2			
18	90430–06166	GASKET	1	1	1			
19	5PW–15361–00	GAUGE, LEVEL	1	1	1			
20	5VY–15316–00	DAMPER, ENGINE MOUNT 1	1	1	1			

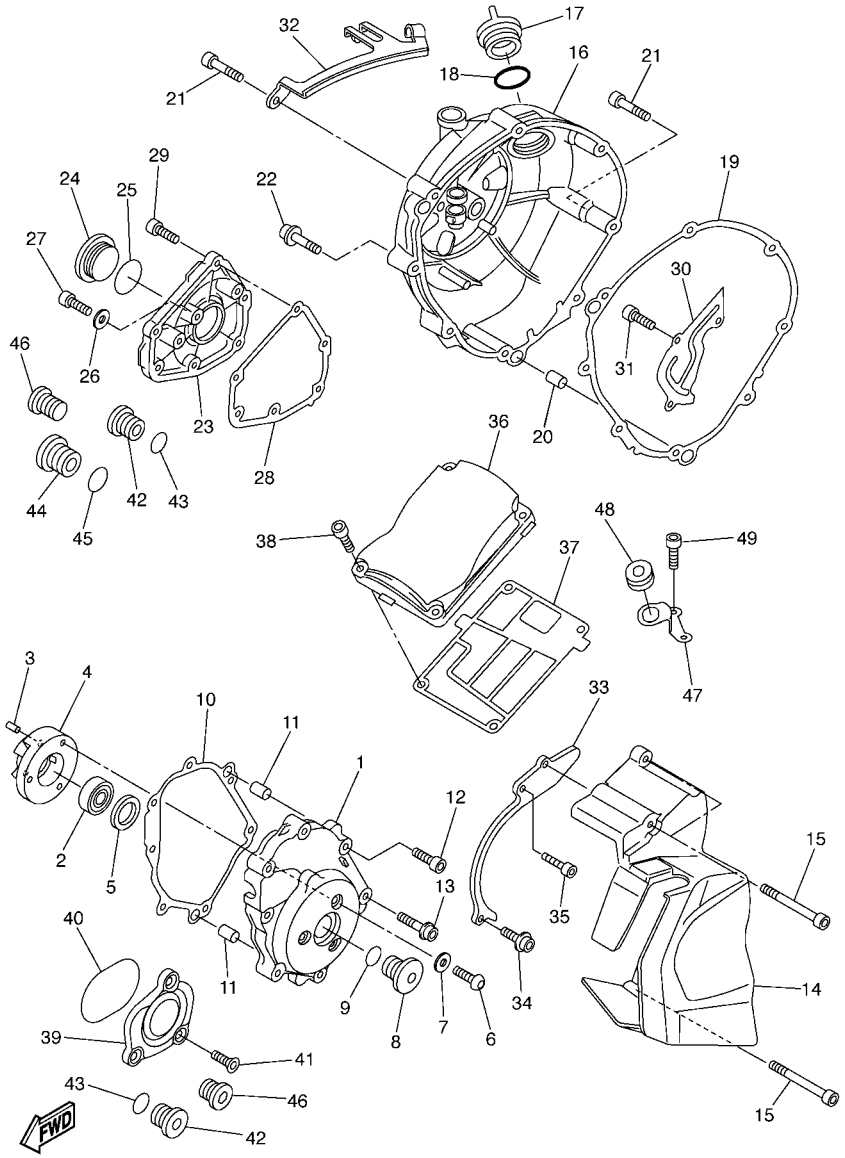

FIG. 15 CRANKCASE COVER 1

REF. NO.	PART NO.	DESCRIPTION	3C3L	3C3M	3C3N			REMARKS
1	5VY–15411–00	COVER, CRANKCASE 1	1	1	1			
2	93306–20124	BEARING	1	1	1			
3	93605–10108	PIN, DOWEL	2	2	2			
4	5VY–15164–00	HOUSING, BEARING 2	1	1	1			
5	5VY–15542–00	COLLAR 2	1	1	1			
6	90149–06064	SCREW	3	3	3			
7	90201–06431	WASHER, PLATE	3	3	3			
8	5PX–15189–00	PLUG	1	1	1			
9	93210–22382	O-RING	1	1	1			
10	2D1–15451–10	GASKET, CRANKCASE COVER 1	1	1	1			
11	99480–10018	PIN	2	2	2			
12	90109–06031	BOLT	4	4	4			
13	90110–08068	BOLT, HEXAGON SOCKET HEAD	3	3	3			
14	2D1–15418–00	COVER, CHAIN CASE	1	1	1			
15	90110–06255	BOLT, HEXAGON SOCKET HEAD	3	3	3			
16	2D1–15421–00	COVER, CRANKCASE 2	1	1	1			
17	3F9–15362–00	PLUG, OIL LEVEL	1	1	1			
18	93210–27194	O-RING	1	1	1			
19	4C8–15461–00	GASKET, CRANKCASE COVER 2	1	1	1			
20	93610–20189	PIN, DOWEL	2	2	2			
21	90109–06016	BOLT	7	7	7			
22	90110–06112	BOLT, HEXAGON SOCKET HEAD	1	1	1			
23	2D1–15416–00	COVER, OIL PUMP	1	1	1			
24	90340–32004	PLUG, STRAIGHT SCREW	1	1	1			
25	93210–32172	O-RING	1	1	1			
26	90430–08143	GASKET	1	1	1			
27	92014–08012	BOLT, BUTTON HEAD	1	1	1			

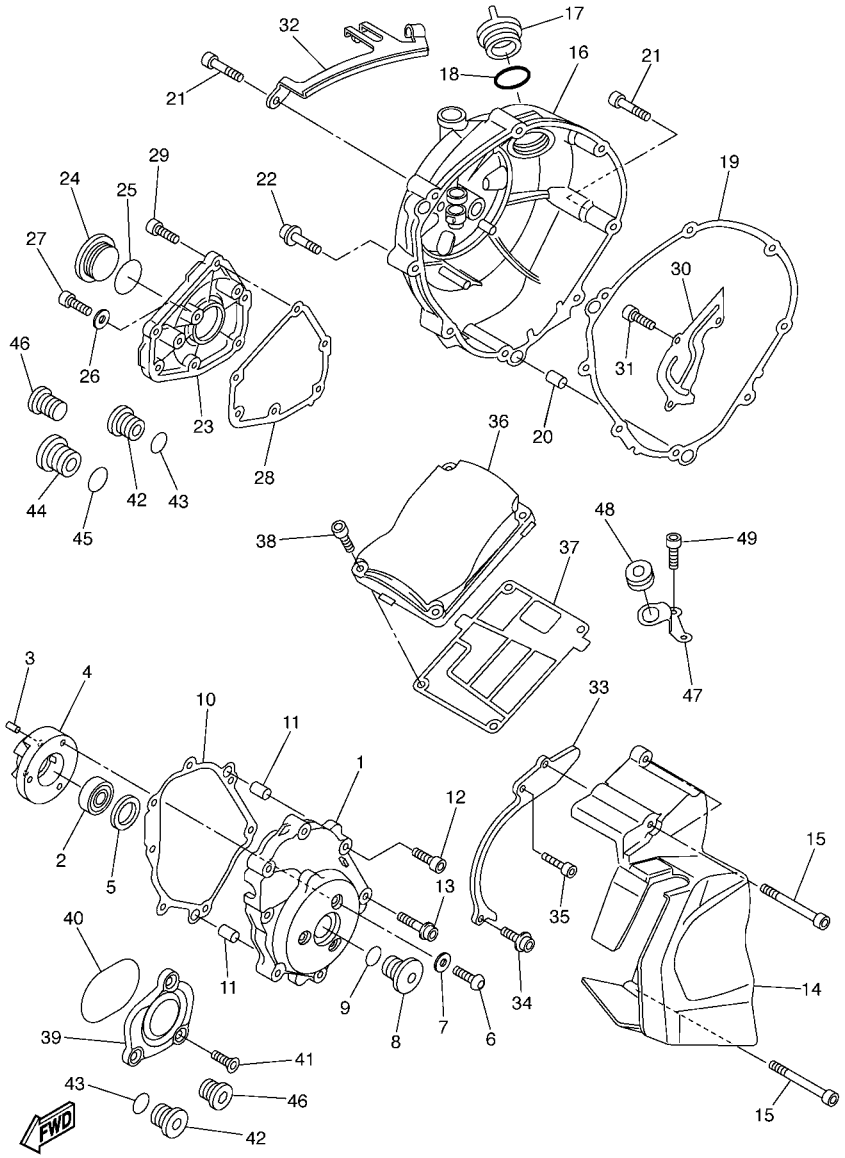

FIG. 15 CRANKCASE COVER 1

REF. NO.	PART NO.	DESCRIPTION	3C3L	3C3M	3C3N			REMARKS
28	4C8–15456–00	GASKET, OIL PUMP COVER 1	1	1	1			
29	90109–06014	BOLT	6	6	6			
30	5VY–11165–00	PLATE, BREATHER	1	1	1			
31	90110–06182	BOLT, HEXAGON SOCKET HEAD	3	3	3			
32	2D1–15441–00	HOLDER, CLUTCH CABLE	1	1	1			
33	4B1–15113–00	PLATE	1	1	1			
34	90110–06277	BOLT, HEXAGON SOCKET HEAD	1	1	1			
35	90110–06276	BOLT, HEXAGON SOCKET HEAD	1	1	1			
36	2D1–15413–00	COVER	1	1	1			
37	4C8–15462–00	GASKET, CRANKCASE COVER 3	1	1	1			
38	90109–06015	BOLT	4	4	4			
39	5VY–15431–00	COVER, CRANKCASE 3	1	1	1			
40	93210–57003	O-RING	1	1	1			
41	90151–06022	SCREW, COUNTERSUNK	3	3	3			
42	36Y–15189–00	PLUG	3	3	3			
43	93210–16325	O-RING	3	3	3			
44	4H7–15189–00	PLUG	1	1	1			
45	93210–22382	O-RING	1	1	1			
46	90340–12003	PLUG, STRAIGHT SCREW	2	2	2			
47	5VY–12443–10	STAY	1	1	1			
48	90480–13014	GROMMET	1	1	1			
49	91380–06014	BOLT	2	2	2			

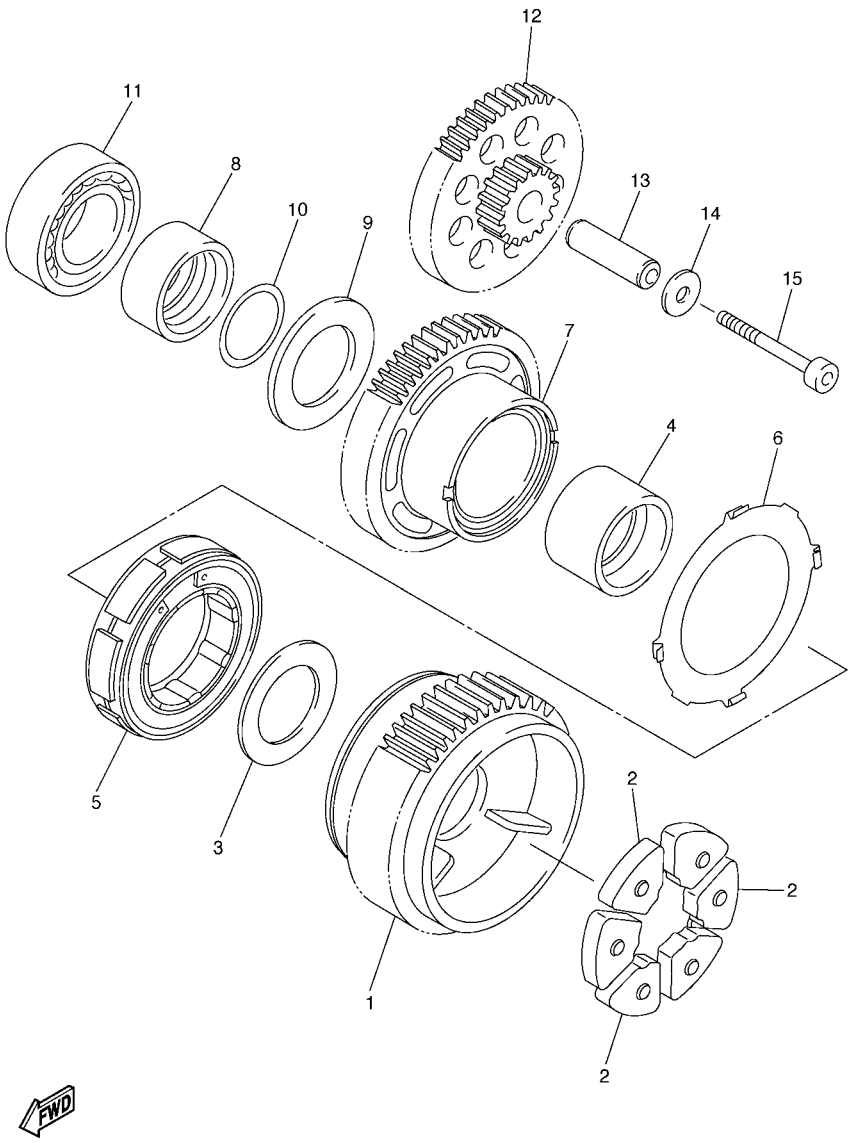

5VY1300-C160

FIG. 16 STARTER

REF. NO.	PART NO.	DESCRIPTION	3C3L	3C3M	3C3N			REMARKS
1	2D1–11537–00	GEAR, DRIVEN	1	1	1			
2	5VY–16155–00	ABSORBER 1	3	3	3			
3	90201–20016	WASHER, PLATE	1	1	1			
4	5VY–11478–00	COLLAR	1	1	1			
5	5VY–15570–00	STARTER CLUTCH ASSY	1	1	1			
6	5VY–15586–00	PLATE, STARTER CLUTCH ASSY	1	1	1			
7	5VY–15515–00	GEAR 3	1	1	1			
8	5VY–11445–00	SPACER	1	1	1			
9	90201–20017	WASHER, PLATE	1	1	1			
10	93210–18397	O-RING	1	1	1			
11	93306–20230	BEARING	1	1	1			
12	5VY–15517–00	GEAR, IDLER 2	1	1	1			
13	5VY–15521–00	SHAFT 1	1	1	1			
14	90201–06589	WASHER, PLATE	1	1	1			
15	90110–06176	BOLT, HEXAGON SOCKET HEAD	1	1	1			

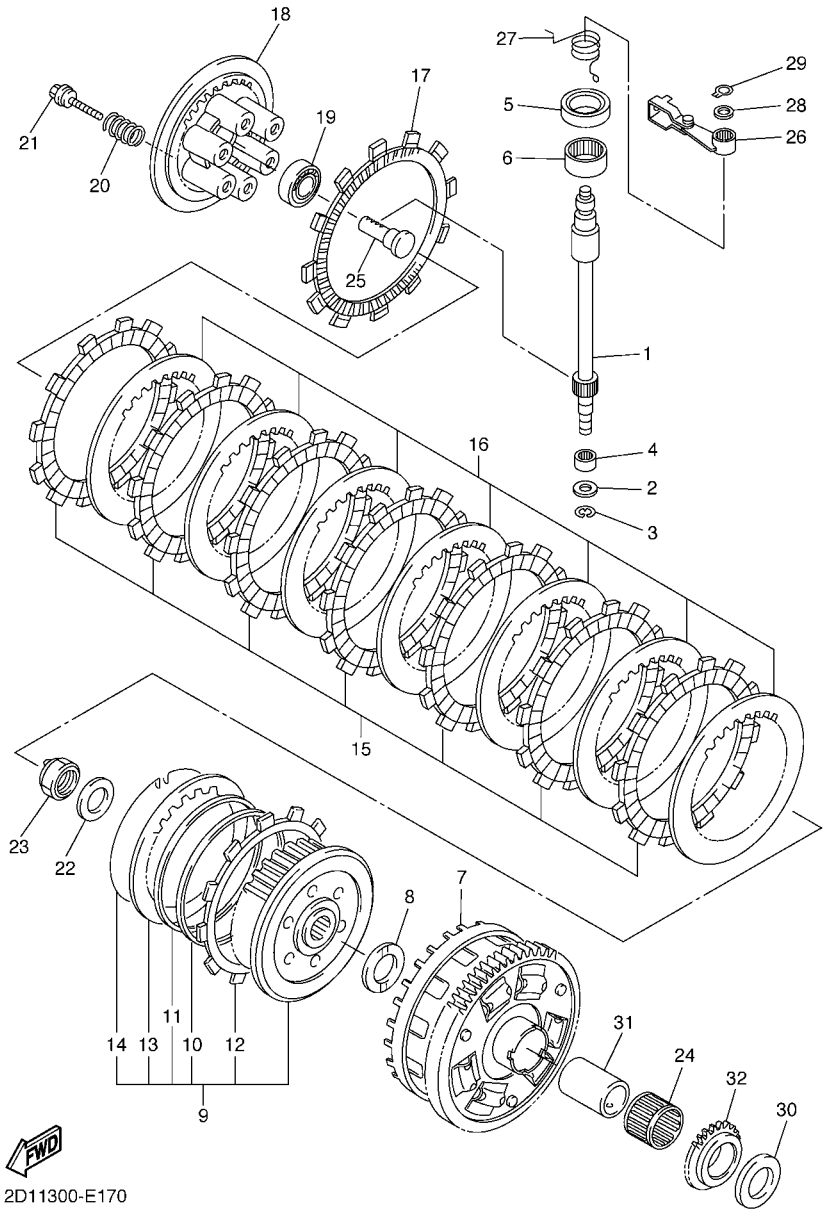

FIG. 17 CLUTCH

REF. NO.	PART NO.	DESCRIPTION	3C3L	3C3M	3C3N			REMARKS
1	2D1–16382–00	AXLE, PUSH LEVER	1	1	1			
2	92907–08600	WASHER, PLATE	1	1	1			
3	99001–07600	CIRCLIP	1	1	1			
4	93317–11096	BEARING	1	1	1			
5	93102–15212	OIL SEAL	1	1	1			
6	93315–31502	BEARING	1	1	1			
7	5VY–16150–00	PRIMARY DRIVEN GEAR COMP.	1	1	1			
8	5VY–16154–00	PLATE, THRUST 1	1	1	1			
9	2D1–16370–00	CLUTCH BOSS ASSY	1	1	1			
10	5VY–16384–00	.PLATE, SEAT	1	1	1			
11	5VY–16383–00	.SPRING, CLUTCH BOSS	1	1	1			
12	5VY–16331–00	.PLATE, FRICTION 2	1	1	1			
13	5VY–16325–00	.PLATE, CLUTCH 2	1	1	1			
14	4X7–16385–00	.RING, CLUTCH BOSS	1	1	1			
15	5VY–16321–00	PLATE, FRICTION	7	7	7			
16	5VY–16325–00	PLATE, CLUTCH 2	7	7	7			
17	5VY–16330–00	PLATE, FRICTION 2	1	1	1			
18	5VY–16351–00	PLATE, PRESSURE 1	1	1	1			
19	93306–00304	BEARING	1	1	1			
20	90501–230A0	SPRING, COMPRESSION	6	6	6			
21	90159–06026	SCREW, WITH WASHER	6	6	6			
22	90208–20001	WASHER, CONICAL SPRING	1	1	1			
23	90179–20007	NUT	1	1	1			
24	93310–232R9	BEARING	1	1	1			
25	4XV–16356–01	ROD, PUSH 1	1	1	1			
26	5VY–16340–00	PUSH LEVER ASSY	1	1	1			
27	90508–18051	SPRING, TORSION	1	1	1			

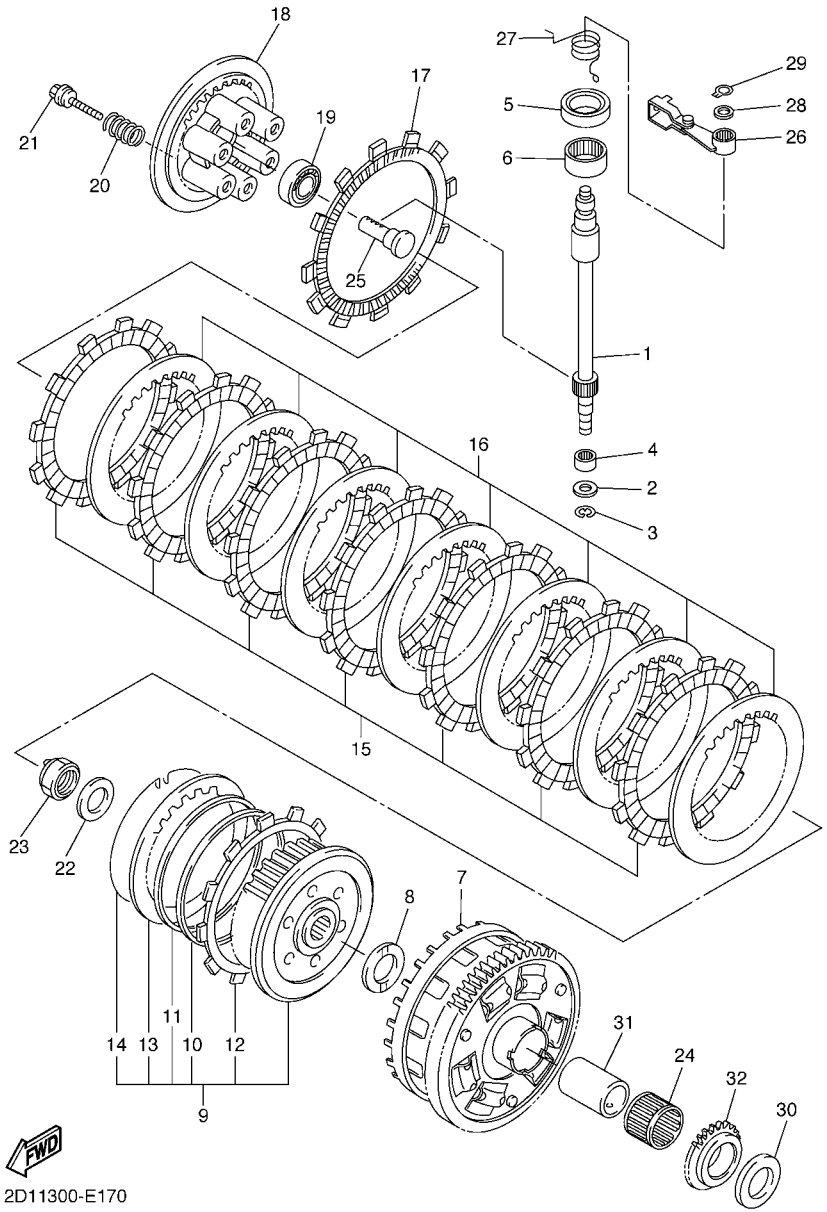

FIG. 17 CLUTCH

REF. NO.	PART NO.	DESCRIPTION	3C3L	3C3M	3C3N			REMARKS
28	90201–10029	WASHER, PLATE	1	1	1			
29	99009–10400	CIRCLIP	1	1	1			
30	5VY–16164–00	PLATE, THRUST 2	1	1	1			
31	5VY–16181–00	SPACER 1	1	1	1			
32	5VY–13354–00	SPROCKET, DRIVE	1	1	1			

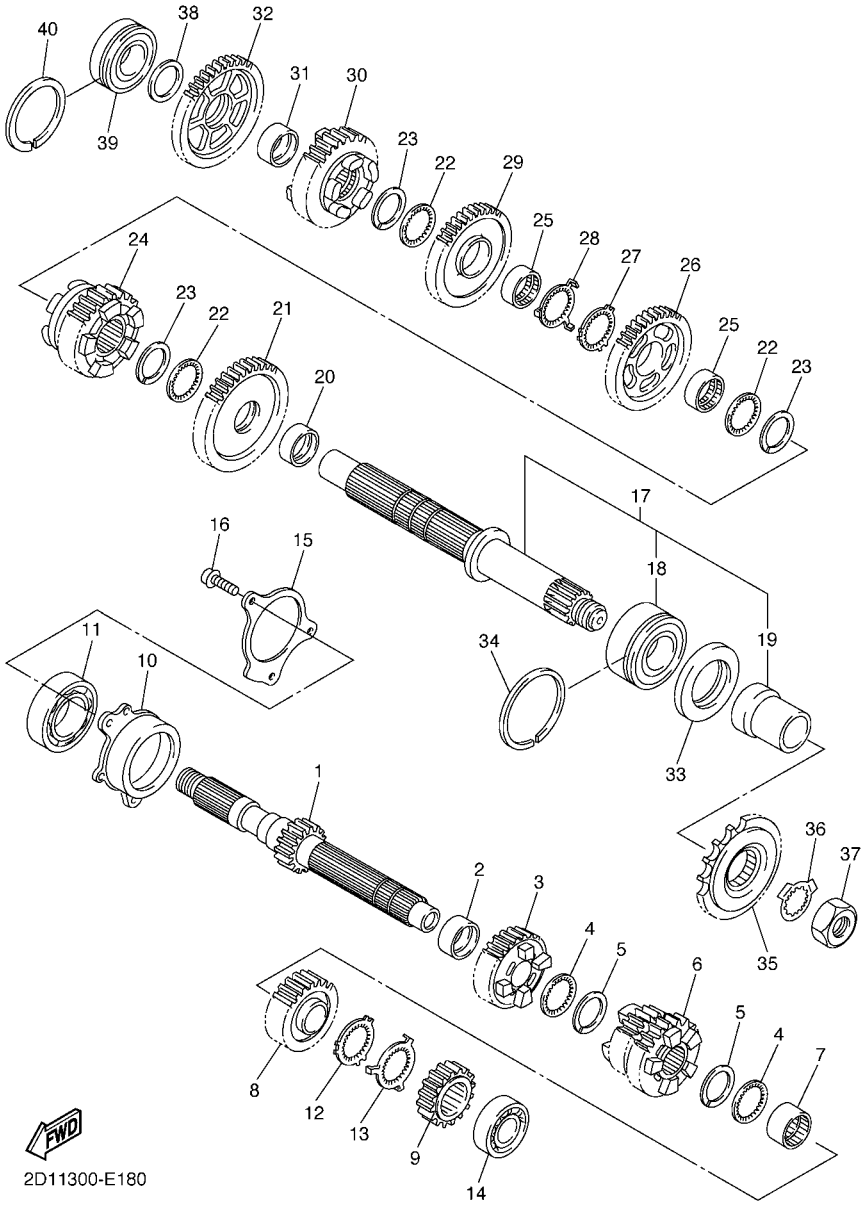

FIG. 18 TRANSMISSION

REF. NO.	PART NO.	DESCRIPTION	3C3L	3C3M	3C3N			REMARKS
1	5VY–17411–00	AXLE, MAIN (15T)	1	1	1			
2	90387–28003	COLLAR	1	1	1			
3	2D1–17151–00	GEAR, 5TH PINION (20T)	1	1	1			
4	90209–25011	WASHER	2	2	2			
5	93440–28184	CIRCLIP	2	2	2			
6	2D1–17131–00	GEAR, 3RD PINION (21/23T)	1	1	1			
7	90387–25007	COLLAR	1	1	1			
8	2D1–17161–00	GEAR, 6TH PINION (24T)	1	1	1			
9	2D1–17121–10	GEAR, 2ND PINION (16T)	1	1	1			
10	5VY–15163–00	HOUSING, BEARING 1	1	1	1			
11	93306–20652	BEARING	1	1	1			
12	90214–25004	WASHER, CLAW	1	1	1			
13	90214–25003	WASHER, CLAW	1	1	1			
14	93306–27208	BEARING	1	1	1			
15	5VY–17446–00	PLATE	1	1	1			
16	90110–06164	BOLT, HEXAGON SOCKET HEAD	3	3	3			
17	5VY–17402–00	DRIVE AXLE ASSY	1	1	1			
18	93305–20605	.BEARING	1	1	1			
19	5VY–17442–00	.COLLAR, DISTANCE	1	1	1			
20	90387–31003	COLLAR	1	1	1			
21	2D1–17221–00	GEAR, 2ND WHEEL (33T)	1	1	1			
22	90209–28008	WASHER	3	3	3			
23	93440–31187	CIRCLIP	3	3	3			
24	2D1–17261–00	GEAR, 6TH WHEEL (29T)	1	1	1			
25	90387–28004	COLLAR	2	2	2			
26	5VY–17241–00	GEAR, 4TH WHEEL (35T)	1	1	1			
27	90214–29002	WASHER, CLAW	1	1	1			

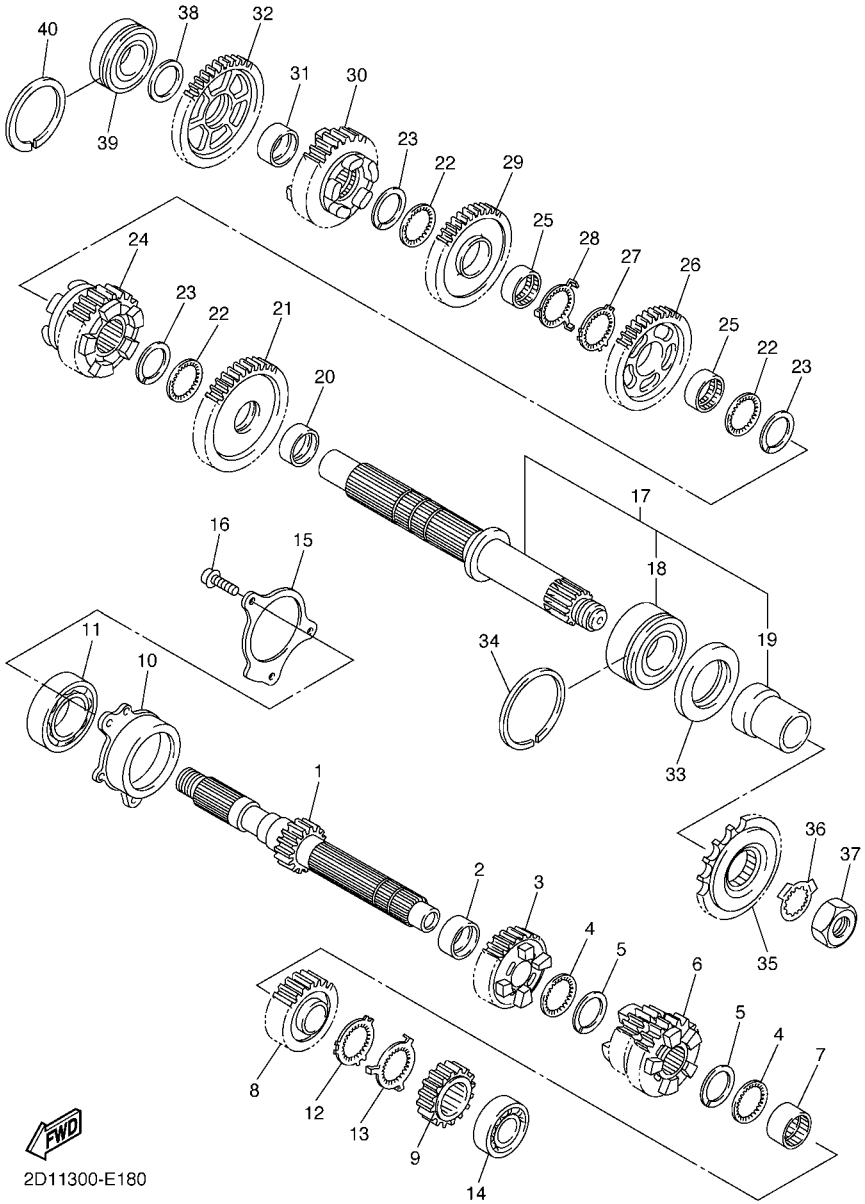

FIG. 18 TRANSMISSION

REF. NO.	PART NO.	DESCRIPTION	3C3L	3C3M	3C3N			REMARKS
28	90214–28002	WASHER, CLAW	1	1	1			
29	5VY–17231–00	GEAR, 3RD WHEEL (37T)	1	1	1			
30	2D1–17251–01	GEAR, 5TH WHEEL (27T)	1	1	1			
31	90387–25008	COLLAR	1	1	1			
32	5VY–17211–00	GEAR,1ST WHEEL (38T)	1	1	1			
33	93102–40330	OIL SEAL	1	1	1			
34	93440–62032	CIRCLIP	1	1	1			
35	3CV–17460–00	SPROCKET,DRIVE (17T)	1	1	1			
36	90215–30233	WASHER, LOCK	1	1	1			
37	90179–22011	NUT	1	1	1			
38	90201–257H0	WASHER, PLATE	1	1	1			
39	93306–205A2	BEARING	1	1	1			
40	93440–52009	CIRCLIP	1	1	1			

FIG. 19 SHIFT CAM & FORK

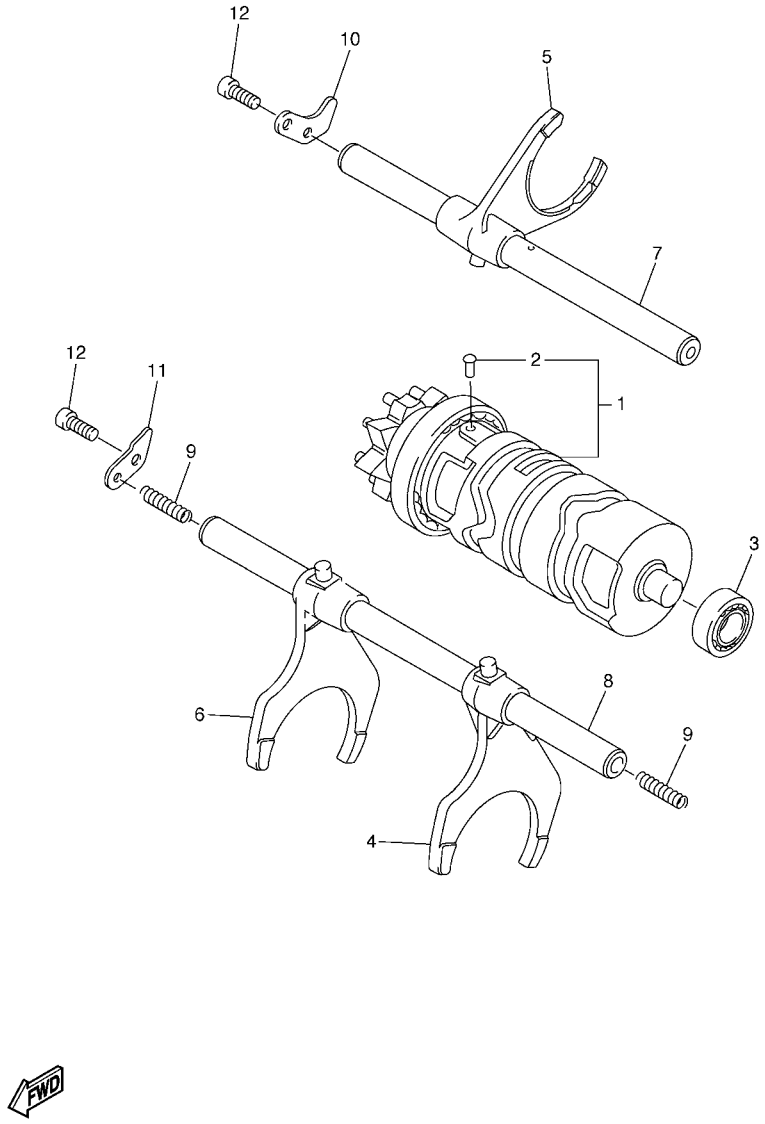

REF. NO.	PART NO.	DESCRIPTION	3C3L	3C3M	3C3N			REMARKS
1	5VY–18540–00	SHIFT CAM ASSY	1	1	1			
2	136–18542–00	.POINT, NEUTRAL	1	1	1			
3	93306–00106	BEARING	1	1	1			
4	2D1–18511–00	FORK, SHIFT 1	1	1	1			
5	2D1–18512–00	FORK, SHIFT 2	1	1	1			
6	5VY–18513–01	FORK, SHIFT 3	1	1	1			
7	5VY–18531–00	BAR, SHIFT FORK GUIDE 1	1	1	1			
8	5VY–18535–00	BAR, SHIFT FORK GUIDE 2	1	1	1			
9	90501–064L1	SPRING, COMPRESSION	2	2	2			
10	5VY–18536–00	STOPPER, SHIFT BAR	1	1	1			
11	5VY–18562–00	PLATE, STOPPER 2	1	1	1			
12	90110–06182	BOLT, HEXAGON SOCKET HEAD	2	2	2			

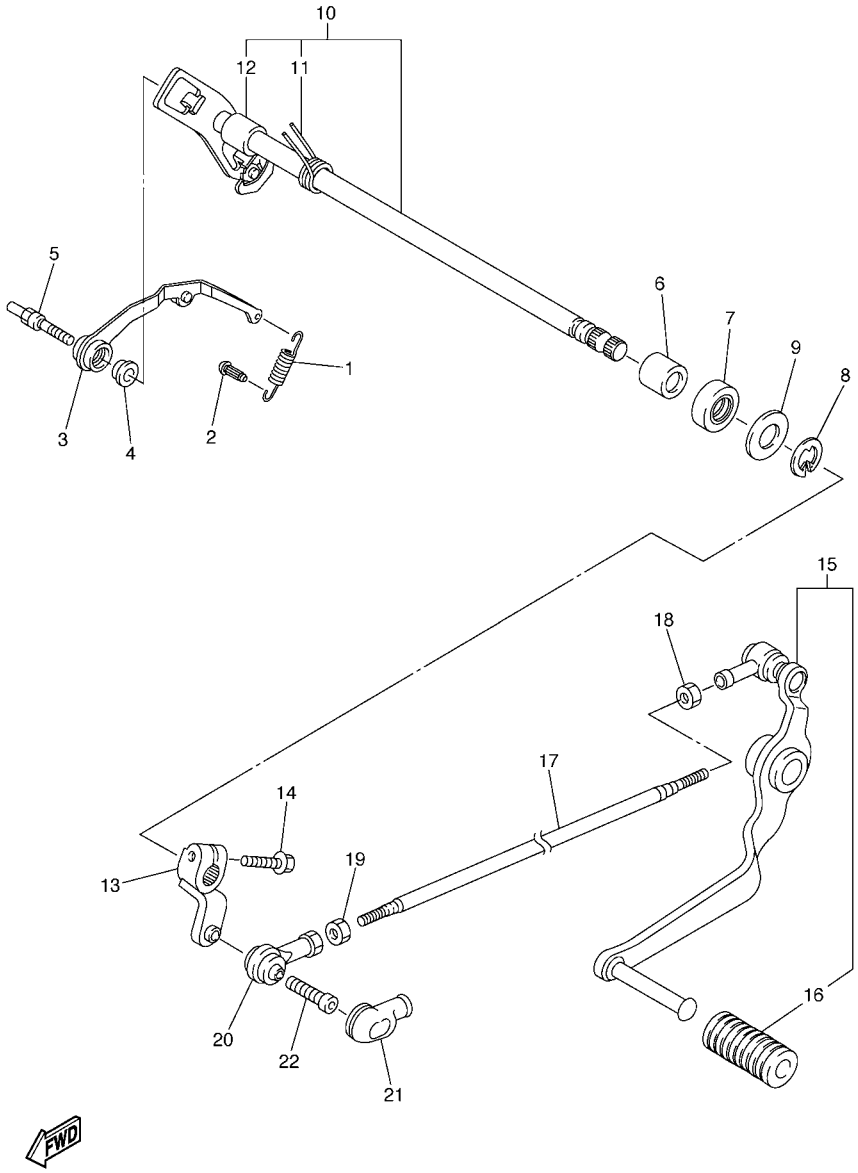

FIG. 20 SHIFT SHAFT

REF. NO.	PART NO.	DESCRIPTION	3C3L	3C3M	3C3N			REMARKS
1	5VY–18144–00	HANGER, SPRING	1	1	1			
2	132–16346–00	HOOK, SPRING	1	1	1			
3	5VY–18140–00	STOPPER LEVER ASSY	1	1	1			
4	90387–0804S	COLLAR	1	1	1			
5	5VY–18127–10	STOPPER, SCREW	1	1	1			
6	93317–11295	BEARING	2	2	2			
7	93102–12106	OIL SEAL (SD 12-22-5 HS)	1	1	1			
8	99002–10600	CIRCLIP	1	1	1			
9	90201–12575	WASHER, PLATE	2	2	2			
10	2D1–18101–00	SHIFT SHAFT ASSY	1	1	1			
11	90508–32020	.SPRING, TORSION	1	1	1			
12	90387–1211D	.COLLAR	1	1	1			
13	2D1–18112–00	ARM, SHIFT	1	1	1			
14	95022–06020	BOLT, FLANGE	1	1	1			
15	2D1–18110–00	SHIFT PEDAL ASSY	1	1	1			
16	5EB–18113–00	.COVER, SHIFT PEDAL	1	1	1			
17	2D1–18115–00	ROD, SHIFT	1	1	1			
18	90170–06228	NUT(COUNTER CLOCKWISE)	1	1	1			
19	95304–06700	NUT	1	1	1			
20	5VX–18116–00	JOINT, ROD 1	1	1	1			
21	5VX–18154–00	COVER, DUST	1	1	1			
22	90111–06019	BOLT,HEX. SOCKET BUTTON	1	1	1			

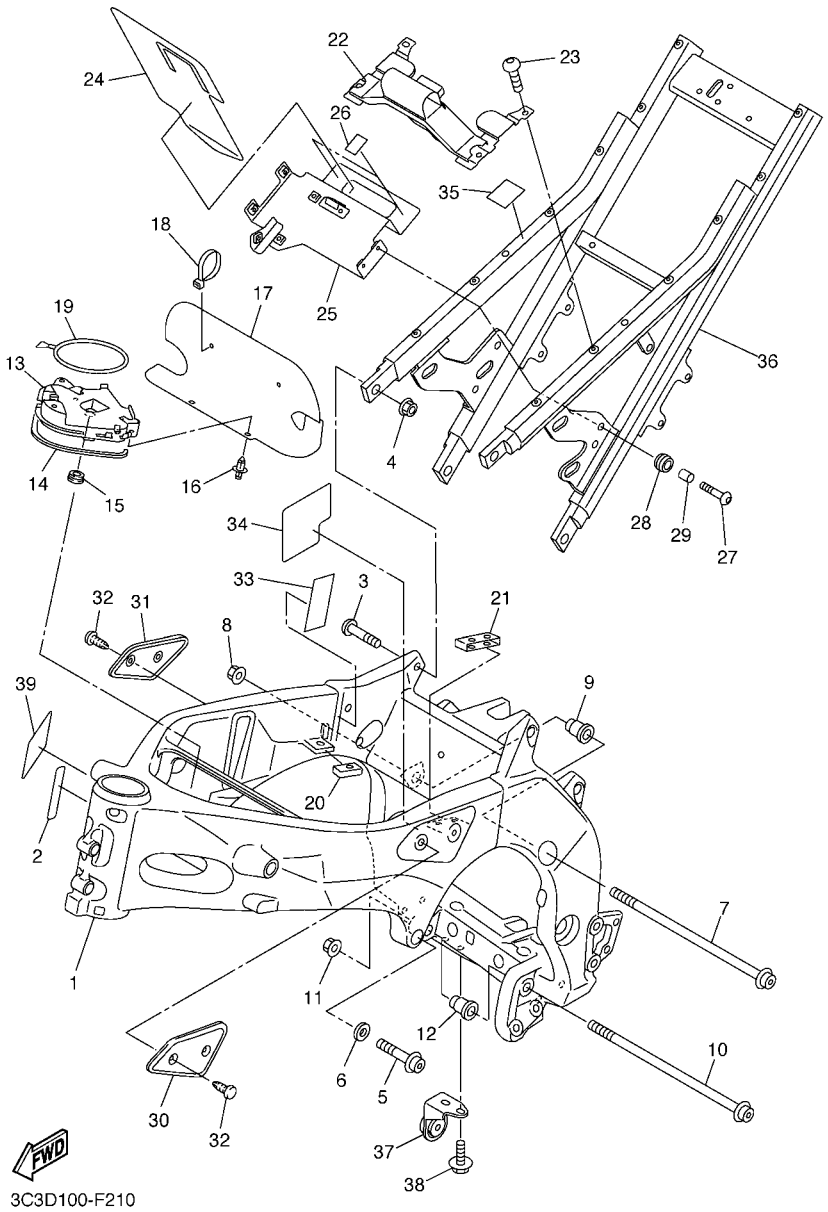

FIG. 21 FRAME

REF. NO.	PART NO.	DESCRIPTION	3C3L	3C3M	3C3N			REMARKS
1	2D1–21110–01–P0	FRAME COMP.	1		1			MBL2
	2D1–21110–21–P0	FRAME COMP.		1				MBL2
2	2D1–2197E–00	PROTECTOR, FRAME FR	1	1	1			
3	90157–10001	SCREW, PAN HEAD	4	4	4			
4	95604–10200	NUT, SELF-LOCKING	4	4	4			
5	95024–10040	BOLT, FLANGE	2	2	2			
6	90201–10020	WASHER, PLATE	2	2	2			
7	90110–10005	BOLT, HEXAGON SOCKET HEAD	1	1	1			
8	90179–10696	NUT	1	1	1			
9	4C8–21495–00	BOLT, ENGINE ADJUSTING	1	1	1			
10	90110–10005	BOLT, HEXAGON SOCKET HEAD	1	1	1			
11	90179–10696	NUT	1	1	1			
12	4C8–21495–00	BOLT, ENGINE ADJUSTING	1	1	1			
13	2D1–2117N–00	COVER 3	1	1	1			
14	2D1–2174Y–00	DAMPER	1	1	1			
15	90480–01333	GROMMET	1	1	1			
16	90269–06001	RIVET	2	2	2			
17	2D1–2117G–00	PROTECTOR	1	1	1			
18	1UA–82591–00	BAND	2	2	2			
19	3YX–21376–00	BAND, TOOL	1	1	1			
20	2D1–24184–00	DAMPER, LOCATING 4	1	1	1			
21	2D1–24185–00	DAMPER, LOCATING 5	1		1			
22	2D1–21345–00	BRACKET, TANK FITTING	1	1	1			
23	90149–06026	SCREW	4	4	4			
24	2D1–24183–00	DAMPER, LOCATING 3	1	1	1			
25	2D1–21287–01	BRACKET, REGULATOR	1	1	1			
26	5YU–21639–00	DAMPER 2	2	2	2			

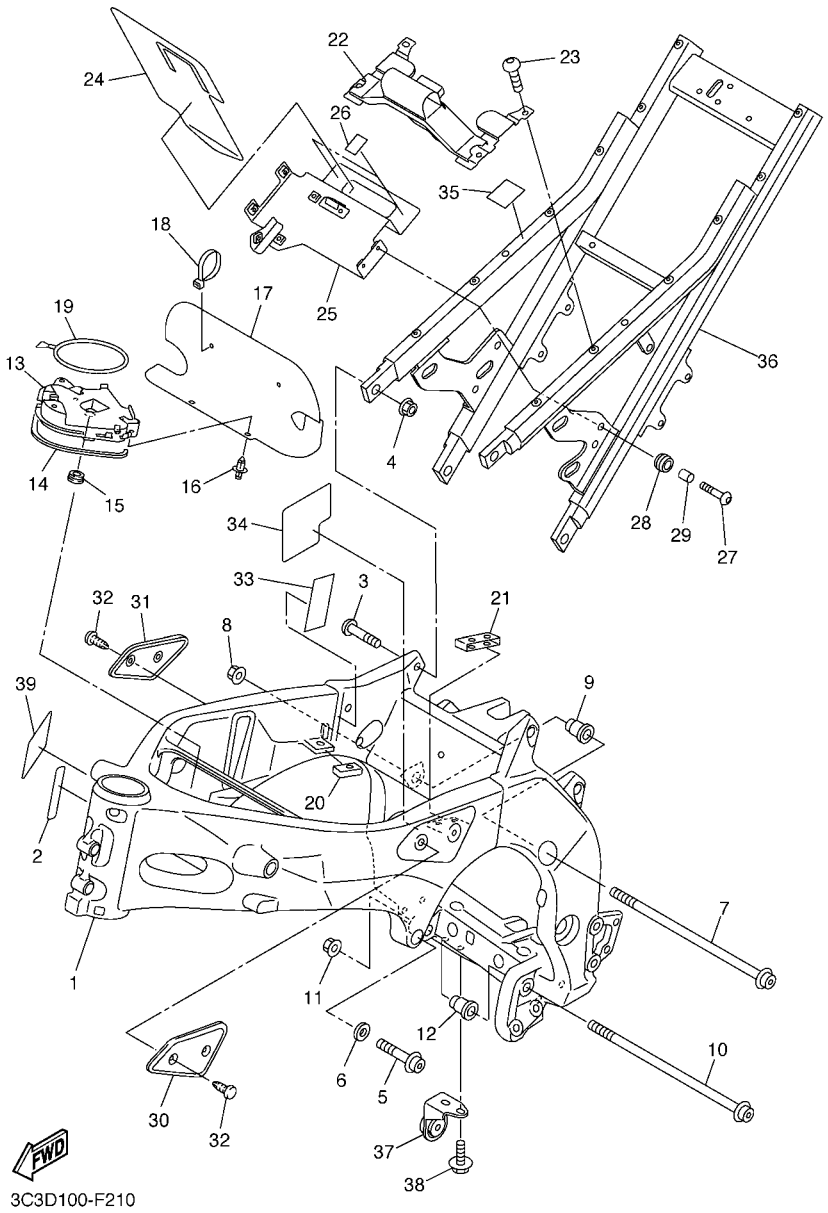

FIG. 21 FRAME

REF. NO.	PART NO.	DESCRIPTION	3C3L	3C3M	3C3N			REMARKS
27	90111–06019	BOLT,HEX. SOCKET BUTTON	4	4	4			
28	90480–14013	GROMMET	4	4	4			
29	90387–06026	COLLAR	4	4	4			
30	2D1–24129–00	COVER, SIDE 1	1	1	1			
31	2D1–24139–00	COVER, SIDE 2	1	1	1			
32	90269–06003	RIVET	4	4	4			
33	4PX–23426–00	DAMPER	1	1	1			
34	2D1–21575–00	SEAL 1	1	1	1			
35	2D1–21268–10	SEAL	1	1	1			
36	2D1–21190–00–P0	REAR FRAME COMP.	1	1	1			MBL2
37	2D1–27425–02	BRACKET, FOOTREST 2	1	1	1			
38	95812–08016	BOLT, FLANGE	2	2	2			
39	5SL–21686–00	PLATE, ROUTING 2		1				

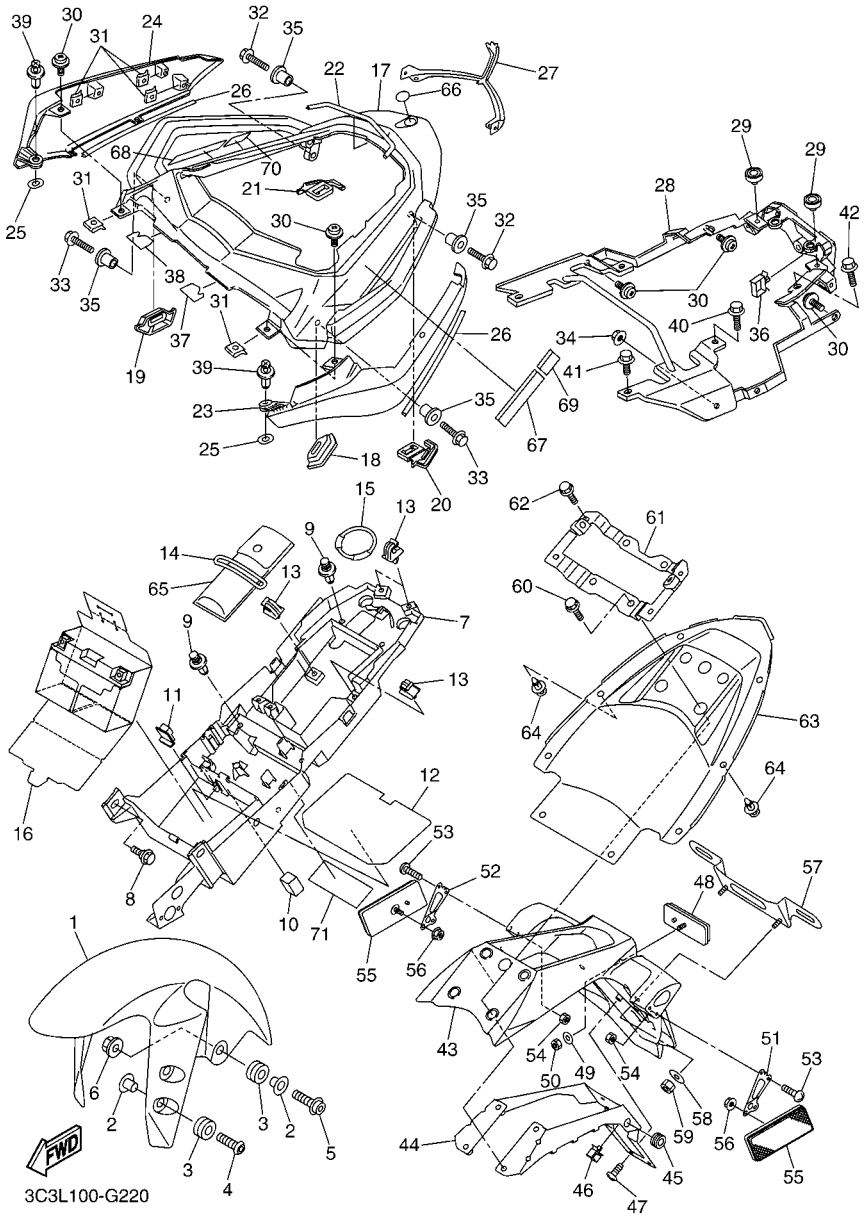

FIG. 22 FENDER

REF. NO.	PART NO.	DESCRIPTION	3C3L	3C3M	3C3N			REMARKS
1	5PW–21511–00–PE	FENDER, FRONT	1	1	1			UR FOR DNMG
	5PW–21511–00–P3	FENDER, FRONT	1	1	1			UR FOR DRMK
2	90387–065J6	COLLAR	6	6	6			
3	90480–12072	GROMMET	6	6	6			
4	90111–06043	BOLT,HEX. SOCKET BUTTON	4	4	4			
5	90109–06031	BOLT	2	2	2			
6	95607–06200	NUT, SELF U-FLANGE	2	2	2			
7	2D1–8212B–01	BOX, BATTERY 1	1	1	1			
8	90109–063F1	BOLT	2	2	2			
9	90269–07077	RIVET	4	4	4			
10	2D1–216A2–00	SEAL, 2	1	1	1			
11	2D1–216A3–00	SEAL, 3	1	1	1			
12	2D1–24182–00	DAMPER, LOCATING 2	1	1	1			
13	90464–07259	CLAMP	4	4	4			
14	4XV–21376–00	BAND, TOOL	1	1	1			
15	2D1–21646–00	BAND	1	1	1			
16	2D1–82122–10	SEAT, BATTERY	1	1	1			
17	3C3–24773–00–P5	HANDLE, SEAT	1	1	1			UR FOR DNMG
	3C3–24773–00–P2	HANDLE, SEAT	1	1	1			UR FOR DRMK
18	3C3–24723–00	DAMPER, SEAT	1	1	1			
19	3C3–24724–00	DAMPER, SEAT	1	1	1			
20	3C3–24737–00	DAMPER, SEAT	1	1	1			
21	3C3–24747–00	DAMPER, SEAT	1	1	1			
22	3C3–21541–00	DAMPER 1	1	1	1			
23	3C3–2471K–00–P5	COVER, TAIL 1	1	1	1			UR FOR DNMG
	3C3–2471K–00–P2	COVER, TAIL 1	1	1	1			UR FOR DRMK
24	3C3–2472K–00–P5	COVER, TAIL 2	1	1	1			UR FOR DNMG

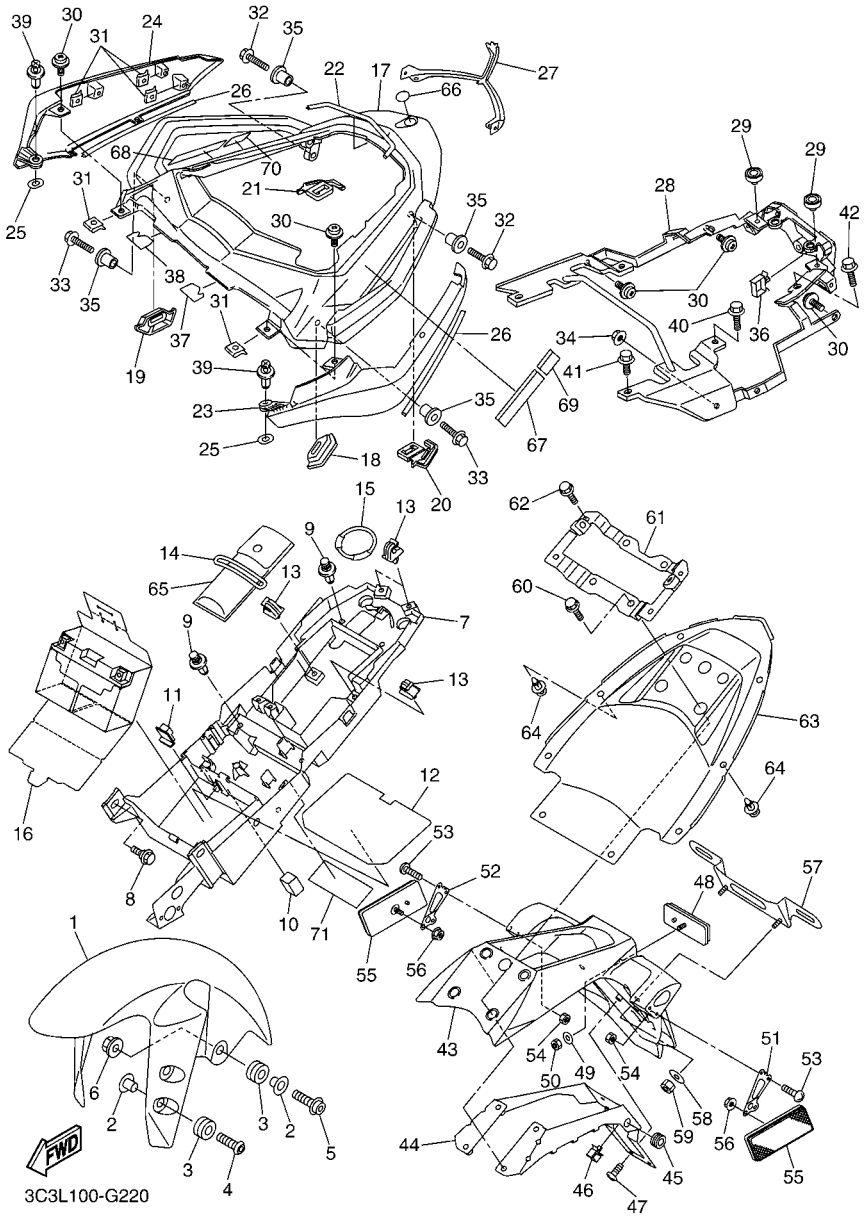

FIG. 22 FENDER

REF. NO.	PART NO.	DESCRIPTION	3C3L	3C3M	3C3N			REMARKS
24	3C3–2472K–00–P2	COVER, TAIL 2	1	1	1			UR FOR DRMK
25	5PW–2174X–00	DAMPER	2	2	2			
26	3C3–2193A–00	PROTECTOR	2	2	2			
27	3C3–2163A–00	COVER, REAR FENDER 1	1	1	1			
28	3C3–21617–00	BRACKET, FENDER	1	1	1			
29	22W–24741–00	PAD, SEAT	2	2	2			
30	90159–05056	SCREW, WITH WASHER	8	8	8			
31	90183–051A0	NUT, SPRING	8	8	8			
32	95822–08025	BOLT, FLANGE	2	2	2			
33	95822–08030	BOLT, FLANGE	2	2	2			
34	95702–08500	NUT, WITH WASHER	2	2	2			
35	90387–09012	COLLAR	4	4	4			
36	90464–16021	CLAMP	1	1	1			
37	3C3–22825–00	PROTECTOR 1	1	1	1			
38	3C3–22826–00	PROTECTOR 2	1	1	1			
39	90269–07076	RIVET	2	2	2			
40	95827–06025	BOLT, FLANGE	2	2	2			
41	95822–06014	BOLT, FLANGE	2	2	2			
42	90105–08447	BOLT, FLANGE	2	2	2			
43	2D1–21629–10	GUARD, MUD	1	1	1			
44	2D1–21688–00	BRACKET, REAR STAY	1	1	1			
45	90480–13004	GROMMET	2	2	2			
46	90464–16021	CLAMP	1	1	1			
47	97702–50016	SCREW, TAPPING	6	6	6			
48	3Y6–85130–02	REAR REFLECTOR ASSY	1	1	1			
49	90201–05043	WASHER, PLATE	1	1	1			
50	95602–05100	NUT, U	1	1	1			

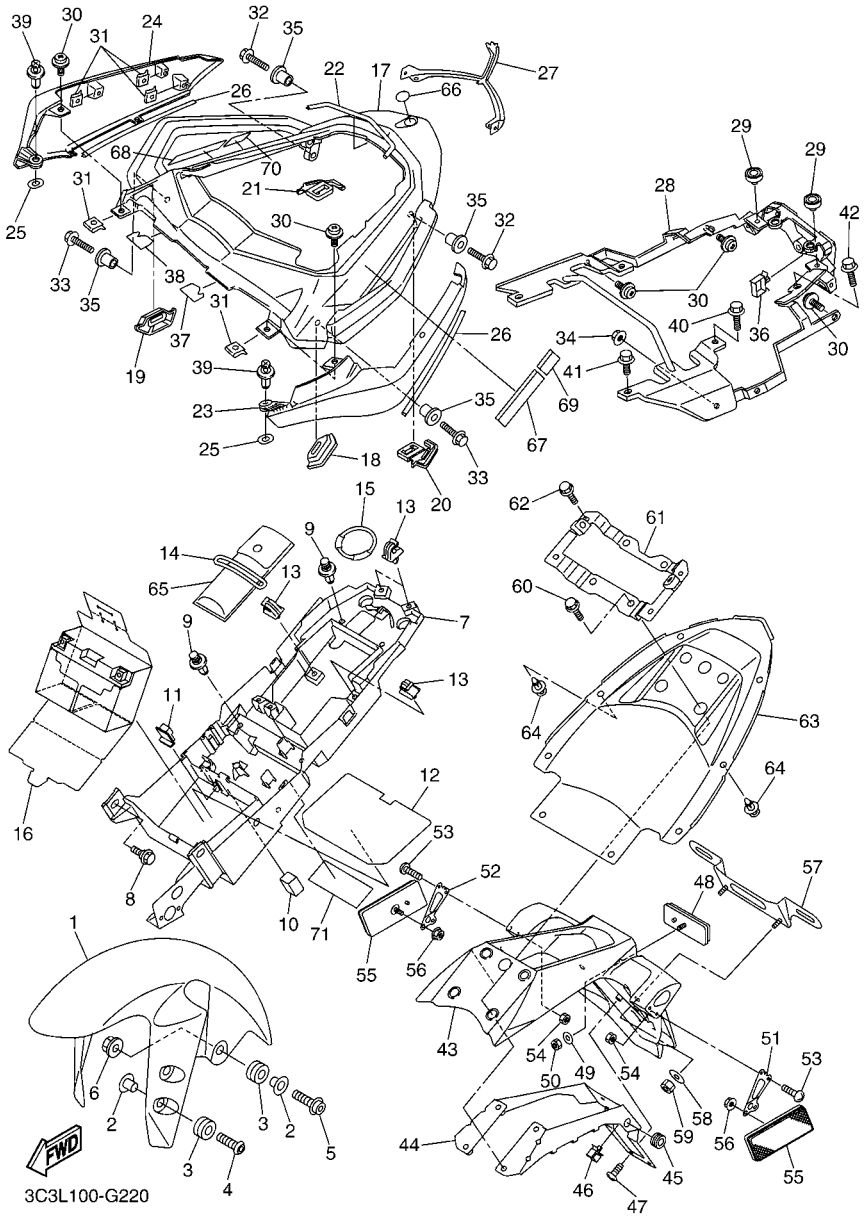

FIG. 22 FENDER

REF. NO.	PART NO.	DESCRIPTION	3C3L	3C3M	3C3N			REMARKS
51	5VY–21688–00	BRACKET, REAR STAY	1	1	1			
52	5VY–21689–00	BRACKET, REAR STAY 2	1	1	1			
53	90150–04041	SCREW, ROUND HEAD	4	4	4			
54	95602–04100	NUT, U	4	4	4			
55	3Y6–85130–02	REAR REFLECTOR ASSY	2	2	2			
56	95702–05500	NUT, WITH WASHER	2	2	2			
57	5MT–84751–00	BRACKET, LICENSE	1	1	1			
58	90201–06088	WASHER, PLATE	2	2	2			
59	95602–06100	NUT, U	2	2	2			
60	95817–08025	BOLT, FLANGE	4	4	4			
61	3C3–21261–00	BRACKET, REAR FENDER	1	1	1			
62	95827–06020	BOLT, FLANGE	4	4	4			
63	3C3–21611–00	FENDER, REAR	1	1	1			
64	90269–07077	RIVET	8	8	8			
65	2D1–28100–00	TOOL KIT	1	1	1			
66	4KN–2836B–00	TUNING FORK MARK	1	1	1			
67	3JJ–28446–A1	LABEL, CAUTION	1	1	1			
68	3JJ–28446–B1	LABEL, CAUTION			1			
69	3TB–24877–A0	LABEL, CAUTION	1	1	1			
70	3TB–24877–B0	LABEL, CAUTION			1			
71	3C3–2179W–20	PLATE, EPA (NON CALIFORNIA)	1					
	3C3–2176P–20	PLATE, EPA (CALIFORNIA)		1				

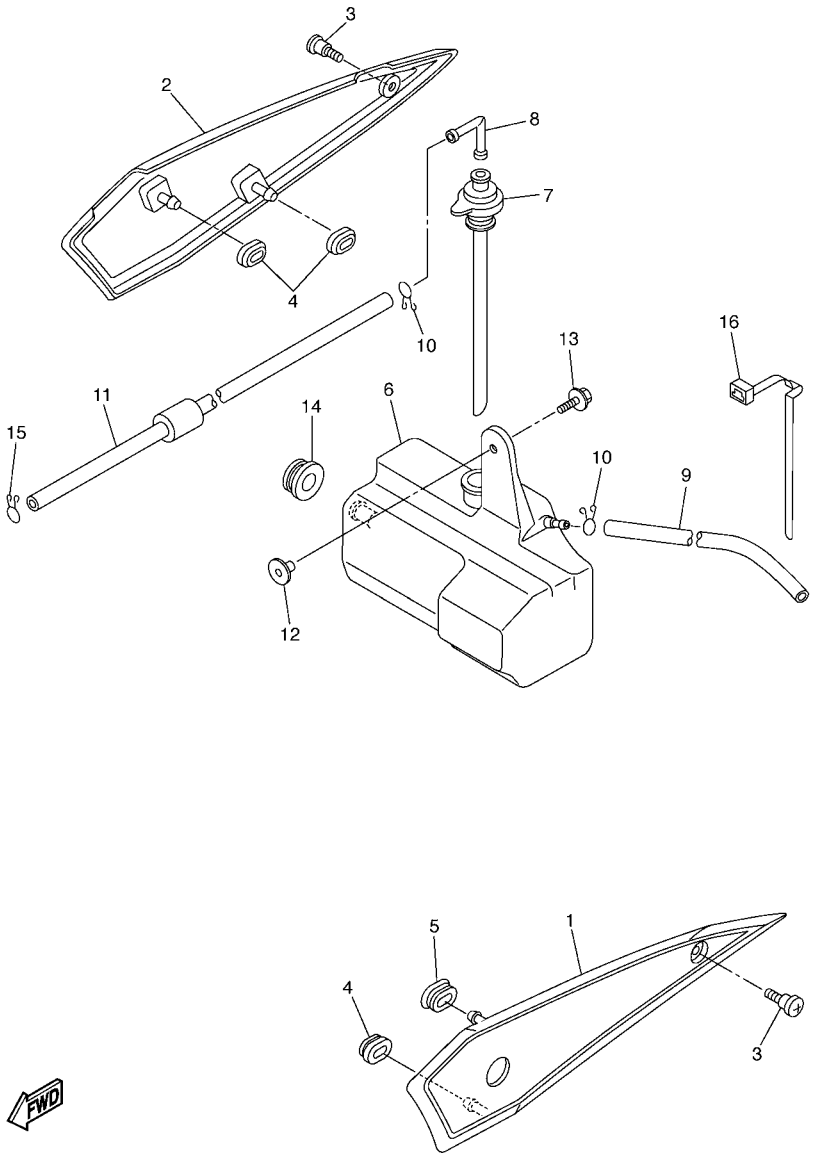

FIG. 23 SIDE COVER

REF. NO.	PART NO.	DESCRIPTION	3C3L	3C3M	3C3N			REMARKS
1	2D1–21711–00	COVER, SIDE 1	1	1	1			
2	2D1–21721–00	COVER, SIDE 2	1	1	1			
3	90149–06165	SCREW	2	2	2			
4	90480–01559	GROMMET	3	3	3			
5	2D1–21719–00	GROMMET	1	1	1			
6	2D1–21871–00	TANK, RECOVERY	1	1	1			
7	5VY–21875–00	CAP	1	1	1			
8	26H–21828–00	ELBOW	1	1	1			
9	90445–08022	HOSE	1	1	1			
10	90467–080A1	CLIP	2	2	2			
11	90445–087K6	HOSE (L700)	1	1	1			
12	90387–062M9	COLLAR	1	1	1			
13	90119–06228	BOLT, WITH WASHER	1	1	1			
14	90480–20001	GROMMET	1	1	1			
15	90467–08075	CLIP	1	1	1			
16	90464–07M40	CLAMP	1	1	1			

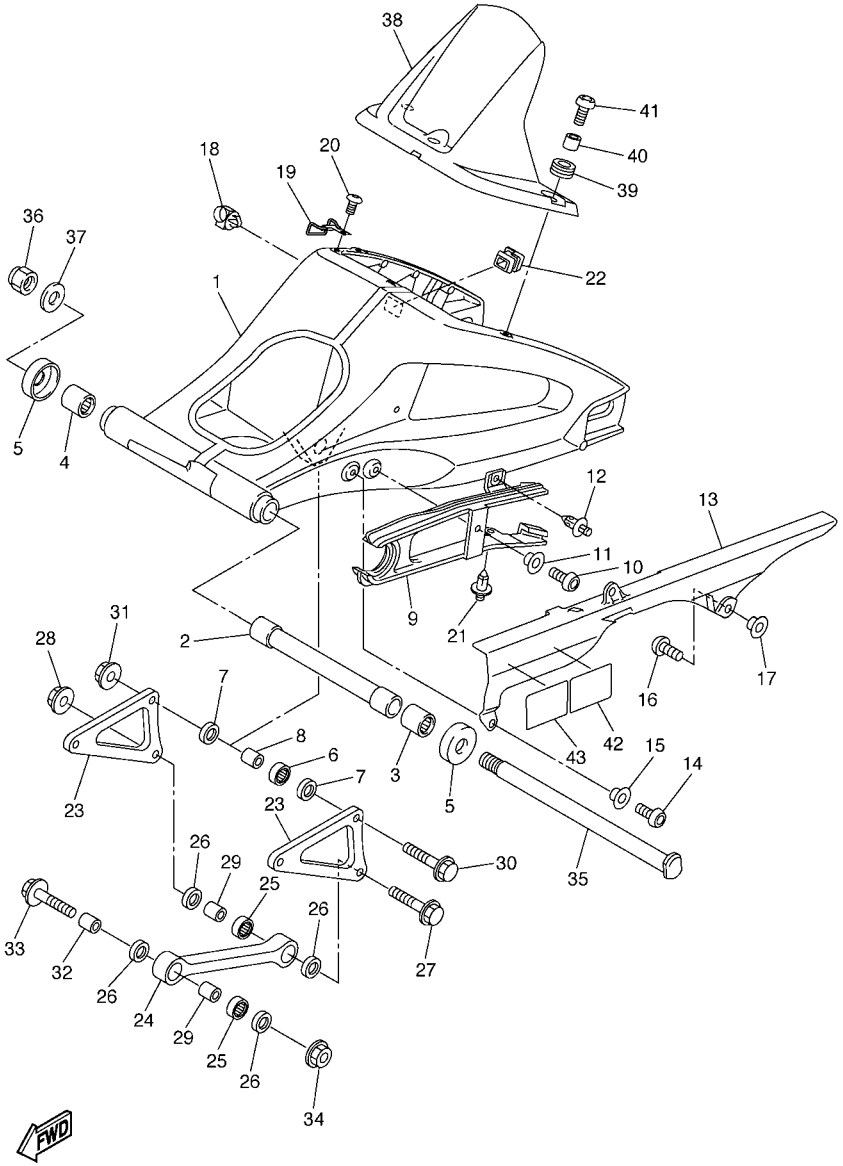

FIG. 24 REAR ARM

REF. NO.	PART NO.	DESCRIPTION	3C3L	3C3M	3C3N			REMARKS
1	2D1–22110–11	REAR ARM COMP.	1	1	1			
2	2D1–22184–00	BUSH	1	1	1			
3	93317–42599	BEARING	1	1	1			
4	93315–42536	BEARING	1	1	1			
5	5JJ–22128–00	COVER, THRUST 1	2	2	2			
6	93315–41762	BEARING	1	1	1			
7	93109–17071	OIL SEAL	2	2	2			
8	90387–1012A	COLLAR	1	1	1			
9	2D1–22151–00	SEAL, GUARD	1	1	1			
10	92012–06014	BOLT, BUTTON HEAD	1	1	1			
11	90387–06130	COLLAR	1	1	1			
12	90269–07007	RIVET	1	1	1			
13	5SL–22311–00	CASE, CHAIN	1	1	1			
14	92012–06014	BOLT, BUTTON HEAD	1	1	1			
15	90387–06130	COLLAR	1	1	1			
16	90110–06102	BOLT, HEXAGON SOCKET HEAD	2	2	2			
17	90387–06009	COLLAR	2	2	2			
18	90464–17003	CLAMP	1	1	1			
19	2D1–25887–00	HOLDER, BRAKE HOSE	1	1	1			
20	92012–06014	BOLT, BUTTON HEAD	1	1	1			
21	90269–07008	RIVET	1	1	1			
22	2D1–22117–00	CAP	1	1	1			
23	2D1–2217A–00	ARM, RELAY	2	2	2			
24	2D1–2217M–00	ARM 1	1	1	1			
25	93315–31758	BEARING	2	2	2			
26	93109–17071	OIL SEAL	4	4	4			
27	90105–10030	BOLT, FLANGE	1	1	1			

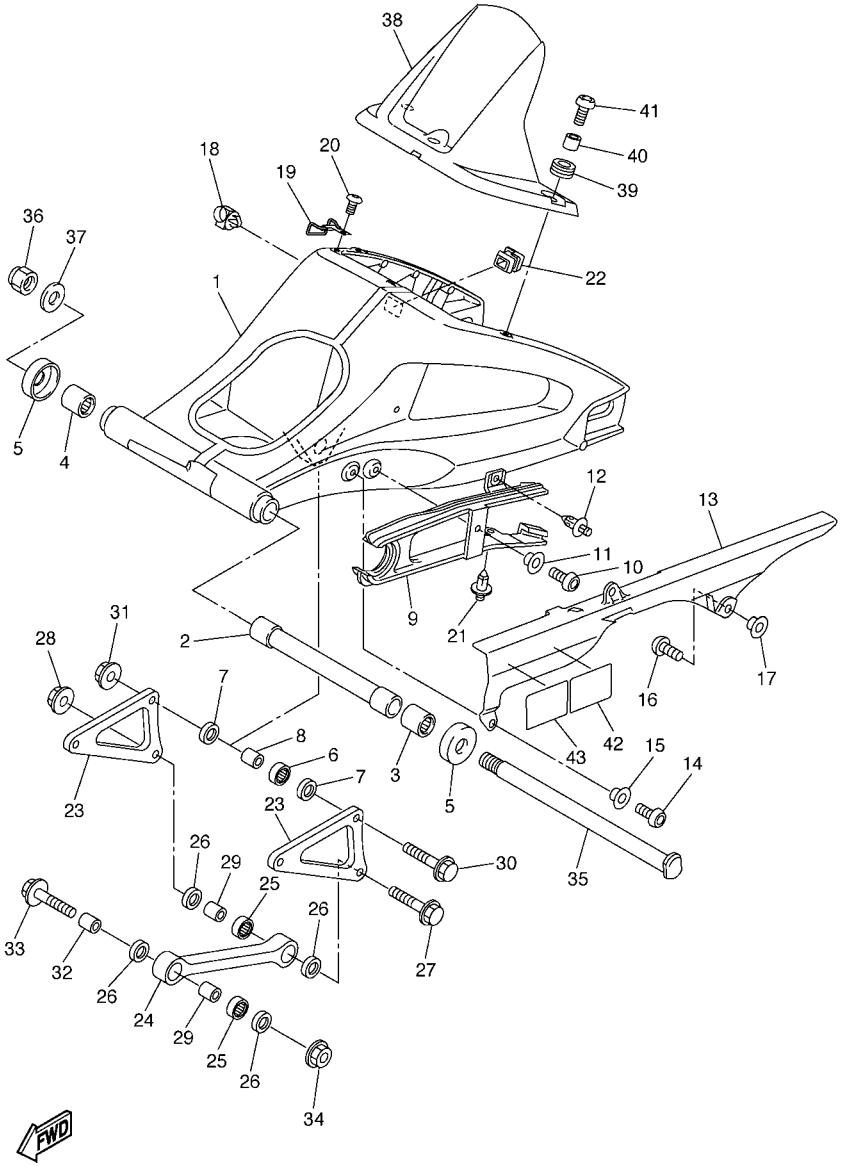

FIG. 24 REAR ARM

REF. NO.	PART NO.	DESCRIPTION	3C3L	3C3M	3C3N			REMARKS
28	95607–10200	NUT, U FLANGE	1	1	1			
29	90387–1012A	COLLAR	2	2	2			
30	90105–10030	BOLT, FLANGE	2	2	2			
31	95607–10200	NUT, U FLANGE	2	2	2			
32	90387–10043	COLLAR	1	1	1			
33	90105–10323	BOLT, FLANGE	1	1	1			
34	95607–10200	NUT, U FLANGE	1	1	1			
35	2D1–22141–00	SHAFT, PIVOT	1	1	1			
36	90185–18167	NUT, SELF-LOCKING	1	1	1			
37	90201–18013	WASHER, PLATE	1	1	1			
38	2D1–21650–00	REAR FENDER COMP.	1	1	1			
39	90480–12003	GROMMET	3	3	3			
40	90387–0600V	COLLAR	3	3	3			
41	90149–06302	SCREW	3	3	3			
42	5VY–21668–00	LABEL, TIRE	1	1	1			
43	5VY–21668–10	LABEL, TIRE			1			

FIG. 25 REAR SUSPENSION

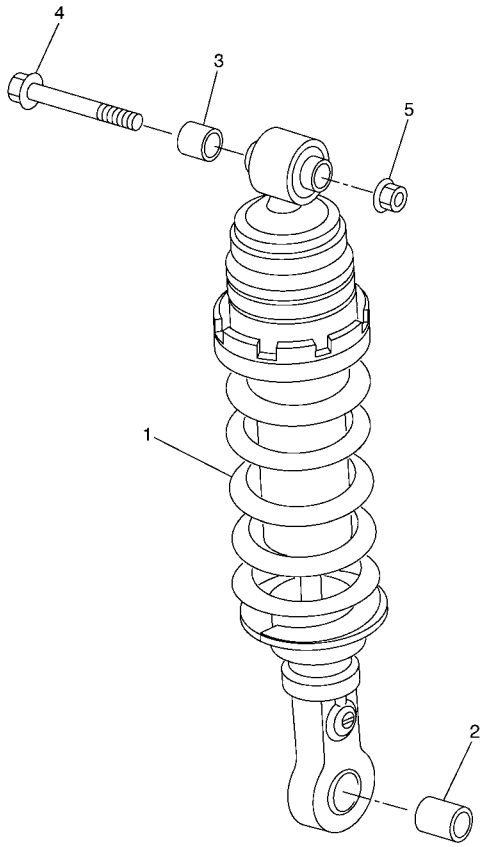

2D11300-E250

REF. NO.	PART NO.	DESCRIPTION	3C3L	3C3M	3C3N			REMARKS
1	2D1–22210–11	SHOCK ABSORBER ASSY, REAR	1	1				
	2D1–22210–21	SHOCK ABSORBER ASSY, REAR			1			
2	90387–1012A	COLLAR	1	1	1			
3	90387–10043	COLLAR	1	1	1			
4	90105–10323	BOLT, FLANGE	1	1	1			
5	95607–10200	NUT, U FLANGE	1	1	1			

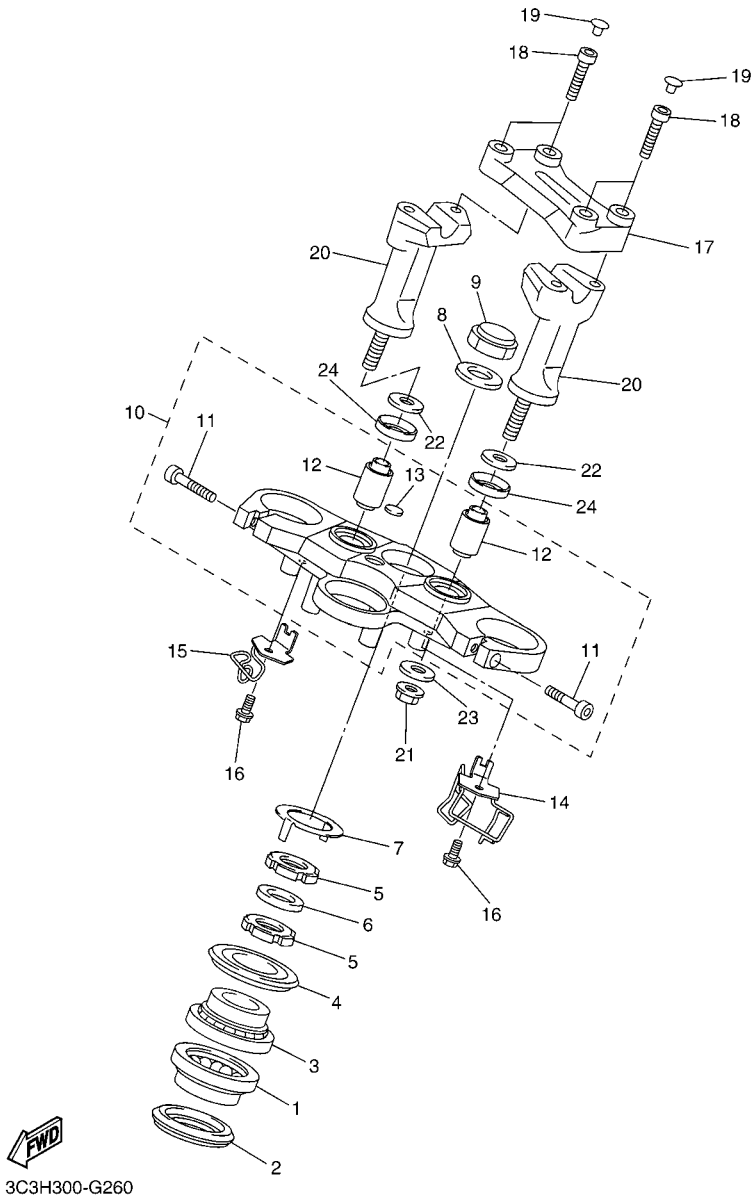

FIG. 26 STEERING

REF. NO.	PART NO.	DESCRIPTION	3C3L	3C3M	3C3N			REMARKS
1	93399–99957	BEARING	1	1	1			
2	3FV–23462–00	SEAL, STEERING	1	1	1			
3	93399–99932	BEARING	1	1	1			
4	4XV–23415–01	COVER, BALL RACE 1	1	1	1			
5	90179–30691	NUT	2	2	2			
6	90202–30235	WASHER, PLATE	1	1	1			
7	4XV–23418–00	WASHER, SPECIAL	1	1	1			
8	90201–281U8	WASHER, PLATE	1	1	1			
9	90176–28083	NUT, CROWN	1	1	1			
10	2D1–23405–10	CROWN, HANDLE ASSY	1	1	1			
11	91314–08030	.BOLT	2	2	2			
12	3VD–23434–00	.HOLDER, DAMPER	2	2	2			
13	4XV–2341B–00	.EMBLEM	1	1	1			
14	3C3–23318–00	HOLDER, CABLE 1	1	1	1			
15	3C3–23319–00	HOLDER, CABLE 2	1	1	1			
16	90105–06050	BOLT, FLANGE	2	2	2			
17	2D1–23441–00	HOLDER, HANDLE UPPER	1	1	1			
18	91317–08030	BOLT	4	4	4			
19	90338–08163	PLUG	4	4	4			
20	2D1–23442–00	HOLDER, HANDLE LOWER	2	2	2			
21	95607–10200	NUT, U FLANGE	2	2	2			
22	92907–10200	WASHER, PLAIN	2	2	2			
23	90201–10141	WASHER, PLATE	2	2	2			
24	5YU–23445–00	DAMPER	2	2	2			

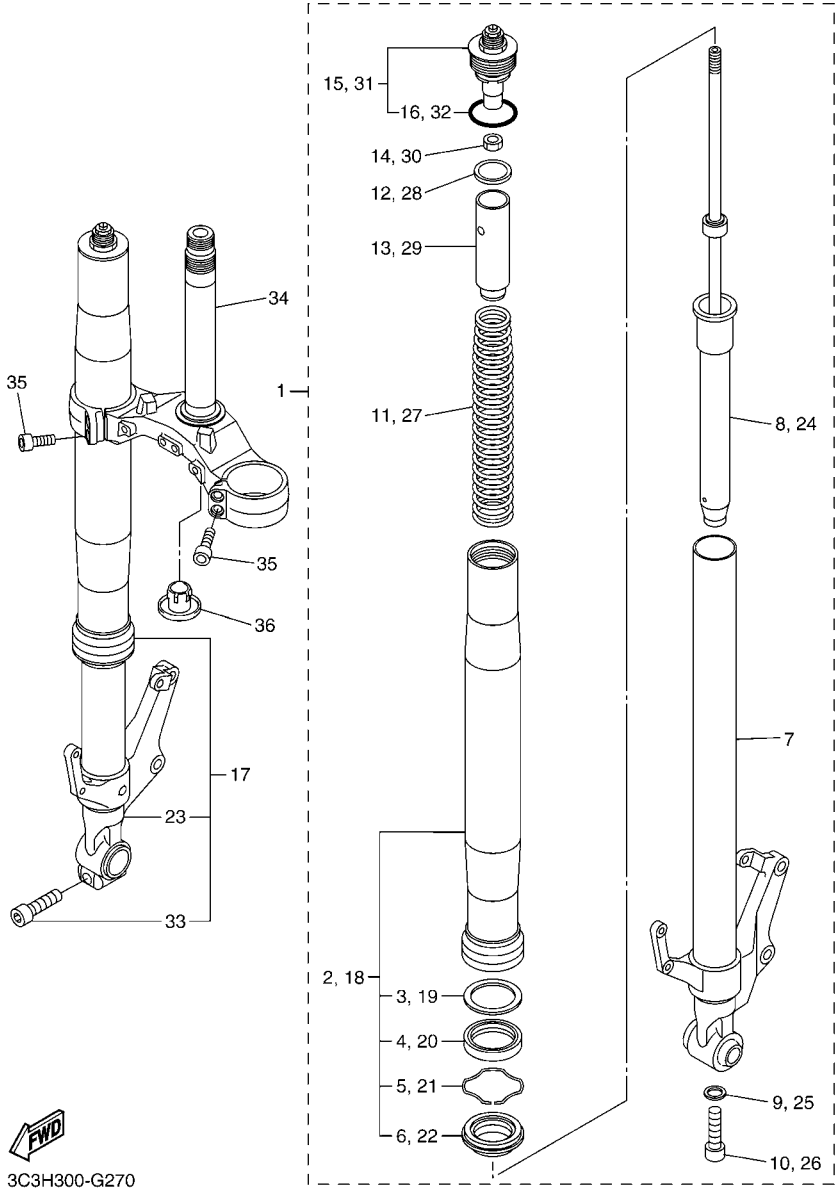

FIG. 27 FRONT FORK

REF. NO.	PART NO.	DESCRIPTION	3C3L	3C3M	3C3N			REMARKS
1	2D1–23102–11	FRONT FORK ASSY (L.H)	1	1	1			
2	2D1–23136–10	.TUBE, OUTER (RIGHT)	1	1	1			
3	4V4–23146–L0	..WASHER, OIL SEAL	1	1	1			
4	4PU–23145–01	..OIL SEAL	1	1	1			
5	4V4–23153–L0	..RING, SNAP	1	1	1			
6	4PU–23144–00	..SEAL, DUST	1	1	1			
7	2D1–23110–00	.INNER TUBE COMP.1	1	1	1			
8	2D1–23170–11	.CYLINDER COMP., FRONT FORK	1	1	1			
9	509–23158–L0	.GASKET	1	1	1			
10	3D8–23181–00	.BOLT, HEXAGON SOCKET HEAD	1	1	1			
11	2D1–23141–00	.SPRING, FRONT FORK	1	1	1			
12	5VY–12277–00	.WASHER	1	1	1			
13	5VY–23118–00	.SPACER	1	1	1			
14	3LC–23357–00	.NUT	1	1	1			
15	2D1–23111–10	.BOLT, CAP	1	1	1			
16	3XJ–23147–L0	..O-RING	1	1	1			
17	2D1–23103–11	FRONT FORK ASSY (R.H)	1	1	1			
18	2D1–23136–10	.TUBE, OUTER (RIGHT)	1	1	1			
19	4V4–23146–L0	..WASHER, OIL SEAL	1	1	1			
20	4PU–23145–01	..OIL SEAL	1	1	1			
21	4V4–23153–L0	..RING, SNAP	1	1	1			
22	4PU–23144–00	..SEAL, DUST	1	1	1			
23	2D1–23120–00	.INNER TUBE COMP.2	1	1	1			
24	2D1–23170–01	.CYLINDER COMP., FRONT FORK	1	1	1			
25	509–23158–L0	.GASKET	1	1	1			
26	3D8–23181–00	.BOLT, HEXAGON SOCKET HEAD	1	1	1			
27	2D1–23141–00	.SPRING, FRONT FORK	1	1	1			

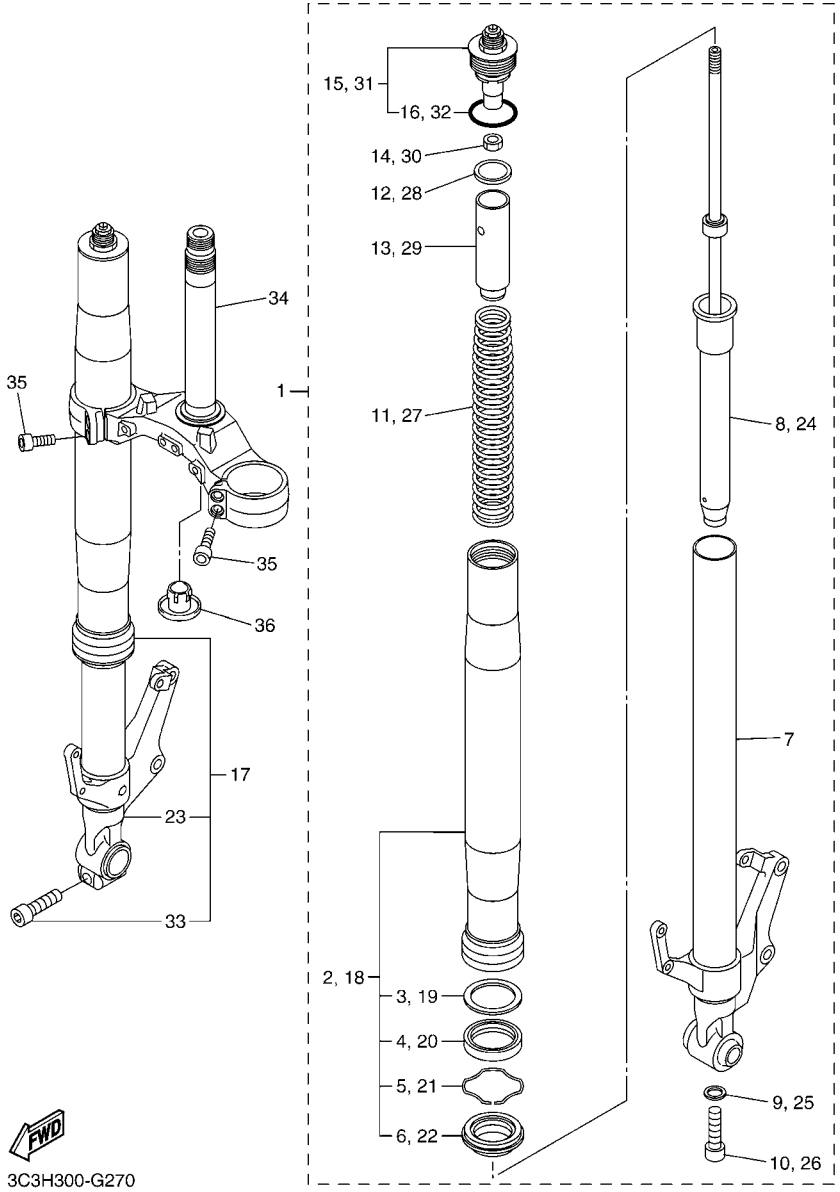

FIG. 27 FRONT FORK

REF. NO.	PART NO.	DESCRIPTION	3C3L	3C3M	3C3N			REMARKS
28	5VY–12277–00	.WASHER	1	1	1			
29	5VY–23118–00	.SPACER	1	1	1			
30	3LC–23357–00	.NUT	1	1	1			
31	2D1–23111–10	.BOLT, CAP	1	1	1			
32	3XJ–23147–L0	..O-RING	1	1	1			
33	91314–08040	.BOLT	1	1	1			
34	2D1–23340–00	UNDER BRACKET COMP.	1	1	1			
35	91314–08030	BOLT	4	4	4			
36	4KM–23123–01	COVER, LOWER 1	1	1	1			

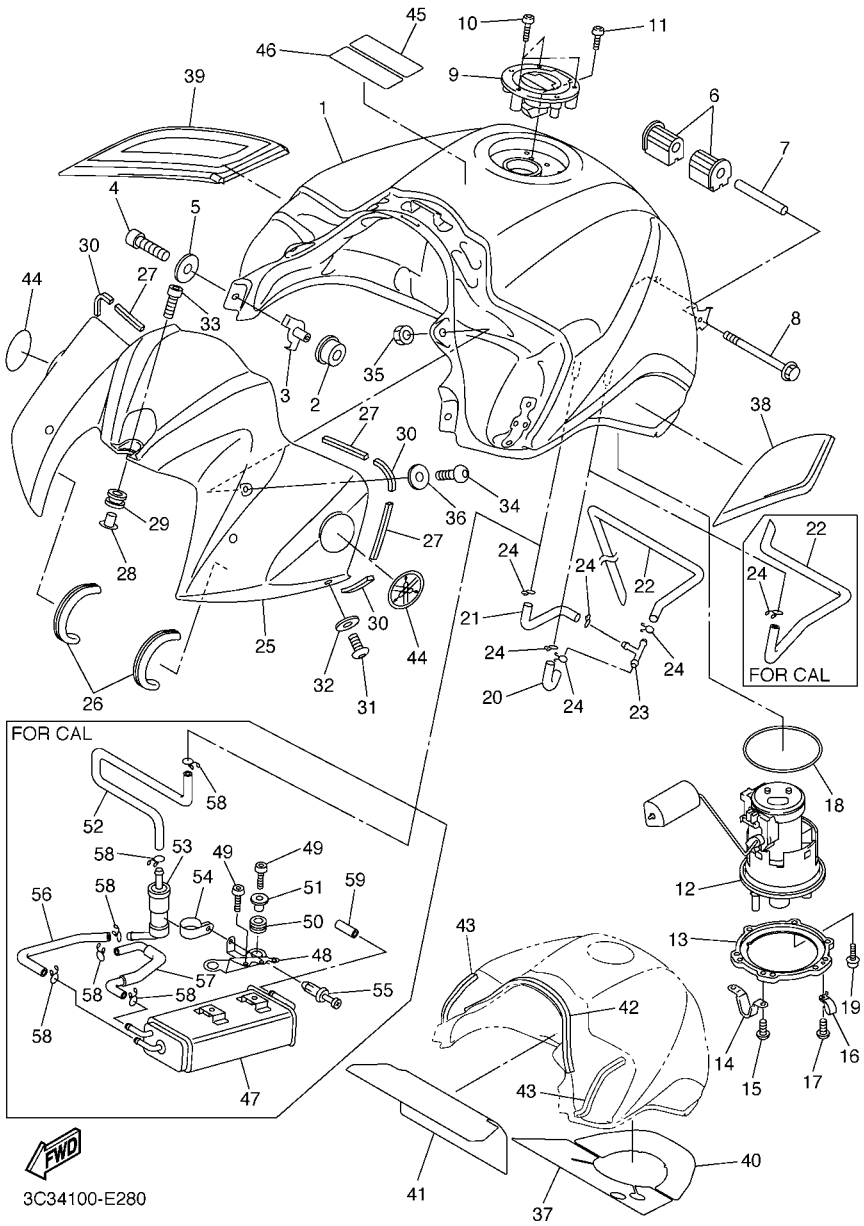

FIG. 28 FUEL TANK

REF. NO.	PART NO.	DESCRIPTION	3C3L	3C3M	3C3N			REMARKS
1	2D1–YK241–00–P8	FUEL TANK COMP.	1	1	1			UR FOR DNMG
	2D1–YK241–00–P4	FUEL TANK COMP.	1	1	1			UR FOR DRMK
2	5VY–24181–00	DAMPER, LOCATING 1	2	2	2			
3	2D1–2412G–00	COLLAR	2	2	2			
4	91312–06016	BOLT	2	2	2			
5	90201–06086	WASHER, PLATE	2	2	2			
6	5VX–24181–00	DAMPER, LOCATING 1	2	2	2			
7	90387–061W6	COLLAR	1	1	1			
8	91312–06090	BOLT	1	1	1			
9	5JJ–24602–00	CAP ASSY	1	1	1			
10	90110–05112	BOLT, HEXAGON SOCKET HEAD	3	3	3			
11	91312–05010	BOLT	1	1	1			
12	2D1–13907–01	FUEL PUMP COMP.	1	1	1			
13	2D1–24491–00	BRACKET, FUEL PUMP	1	1	1			
14	2D1–24192–00	BRACKET, FUEL TANK 2	1	1	1			
15	98902–05008	SCREW, BIND	2	2	2			
16	90461–10010	CLAMP	1	1	1			
17	90154–05035	SCREW, BINDING	1	1	1			
18	5JW–24486–00	O-RING	1	1	1			
19	90110–05028	BOLT, HEXAGON SOCKET HEAD	6	6	6			
20	2D1–24315–00	PIPE 5	1		1			
21	2D1–24316–00	PIPE 6	1		1			
22	2D1–24317–00	PIPE 7	1		1			
	3C3–24317–00	PIPE 7		1				
23	90413–07007	WAY 3	1		1			
24	90467–09006	CLIP	5		5			
	90467–09006	CLIP		1				

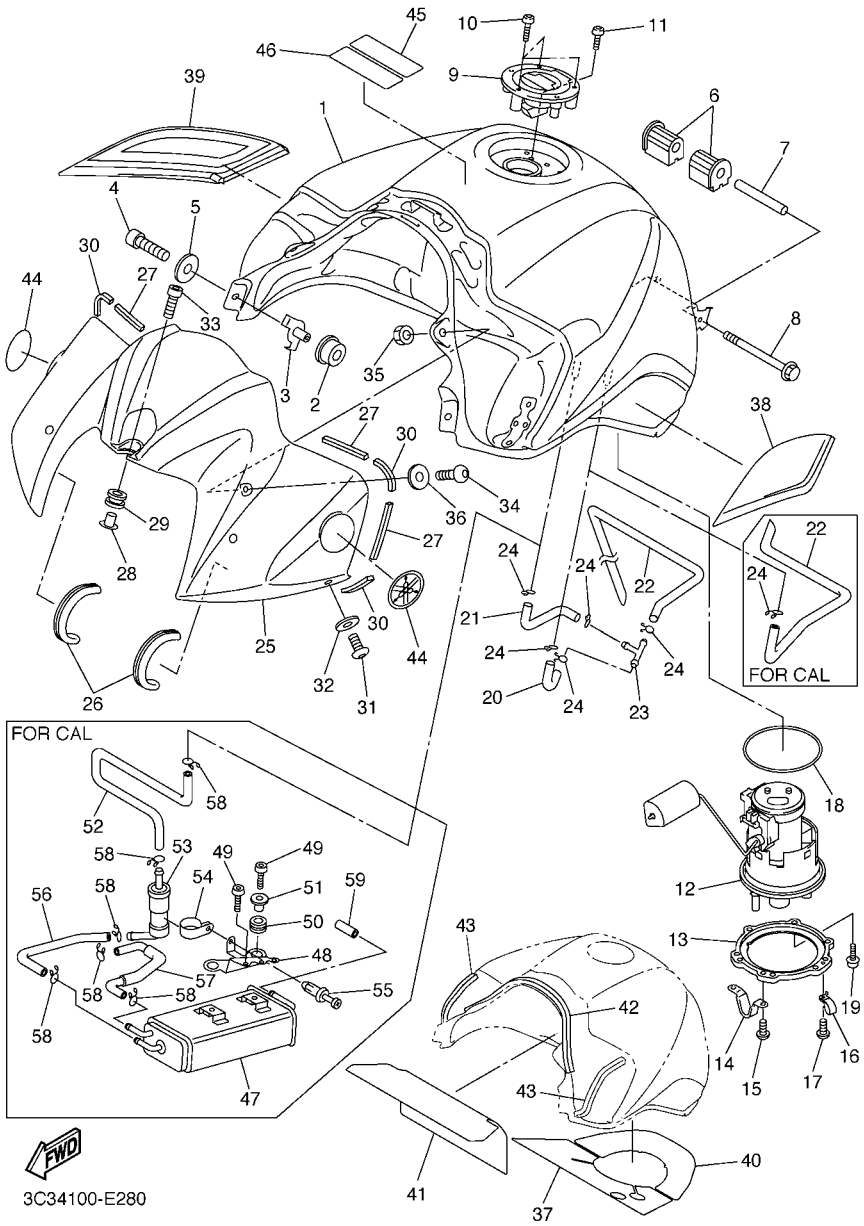

FIG. 28 FUEL TANK

REF. NO.	PART NO.	DESCRIPTION	3C3L	3C3M	3C3N			REMARKS
25	3C3–2171A–00–P4	COVER, TOP	1	1	1			UR FOR DNMG
	3C3–2171A–00–P2	COVER, TOP	1	1	1			UR FOR DRMK
26	2D1–28345–01	MOLE 1	2	2	2			
27	4XV–2834E–00	DAMPER 3	4	4	4			
28	90387–06222	COLLAR	1	1	1			
29	90480–12314	GROMMET	1	1	1			
30	2D1–24181–00	DAMPER, LOCATING 1	4	4	4			
31	90111–05019	BOLT,HEX. SOCKET BUTTON	2	2	2			
32	90202–05224	WASHER, PLATE	2	2	2			
33	90110–06233	BOLT, HEXAGON SOCKET HEAD	1	1	1			
34	90111–05024	BOLT,HEX. SOCKET BUTTON	2	2	2			
35	90179–05003	NUT	2	2	2			
36	90202–05088	WASHER, PLATE	2	2	2			
37	2D1–2414N–00	DAMPER, PLATE 4	1	1	1			
38	2D1–24106–00	TANK SIDE COVER ASSY 1	1	1	1			
39	2D1–24108–00	TANK SIDE COVER ASSY 2	1	1	1			
40	2D1–2414K–00	DAMPER, PLATE 3	1	1	1			
41	2D1–2414H–00	DAMPER, PLATE 1	1	1	1			
42	2D1–2414P–00	DAMPER, PLATE 5	1	1	1			
43	2D1–2414R–00	DAMPER, PLATE 6	2	2	2			
44	5SL–2413B–00	EMBLEM	2	2	2			
45	5GK–2118K–00	LABEL, CAUTION	1	1	1			
46	5GK–2118K–10	LABEL, CAUTION			1			
47	3C3–24170–00	CANISTER ASSY		1				
48	3C3–24216–00	STAY		1				
49	92017–06016	BOLT, BUTTON HEAD		4				
50	90480–13018	GROMMET		2				

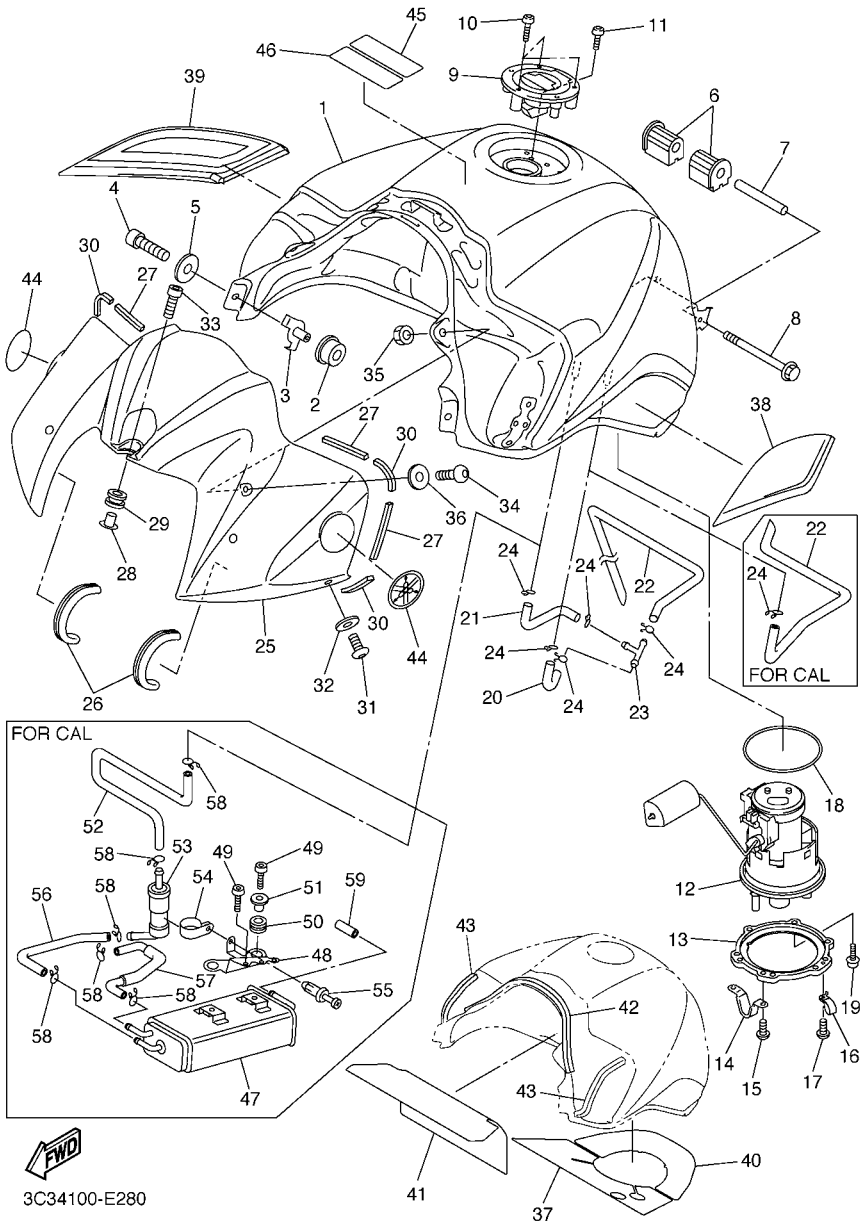

FIG. 28 FUEL TANK

REF. NO.	PART NO.	DESCRIPTION	3C3L	3C3M	3C3N			REMARKS
51	90387–062L2	COLLAR		2				
52	3C3–24313–00	PIPE 3		1				
53	5RB–24180–00	ROLL OVER VALVE ASSY		1				
54	90461–15139	CLAMP		1				
55	90269–05001	RIVET		1				
56	3C3–24314–00	PIPE 4		1				
57	3C3–1443J–01	PIPE		1				
58	90467–09006	CLIP		6				
59	90445–11418	HOSE (L18)		1				

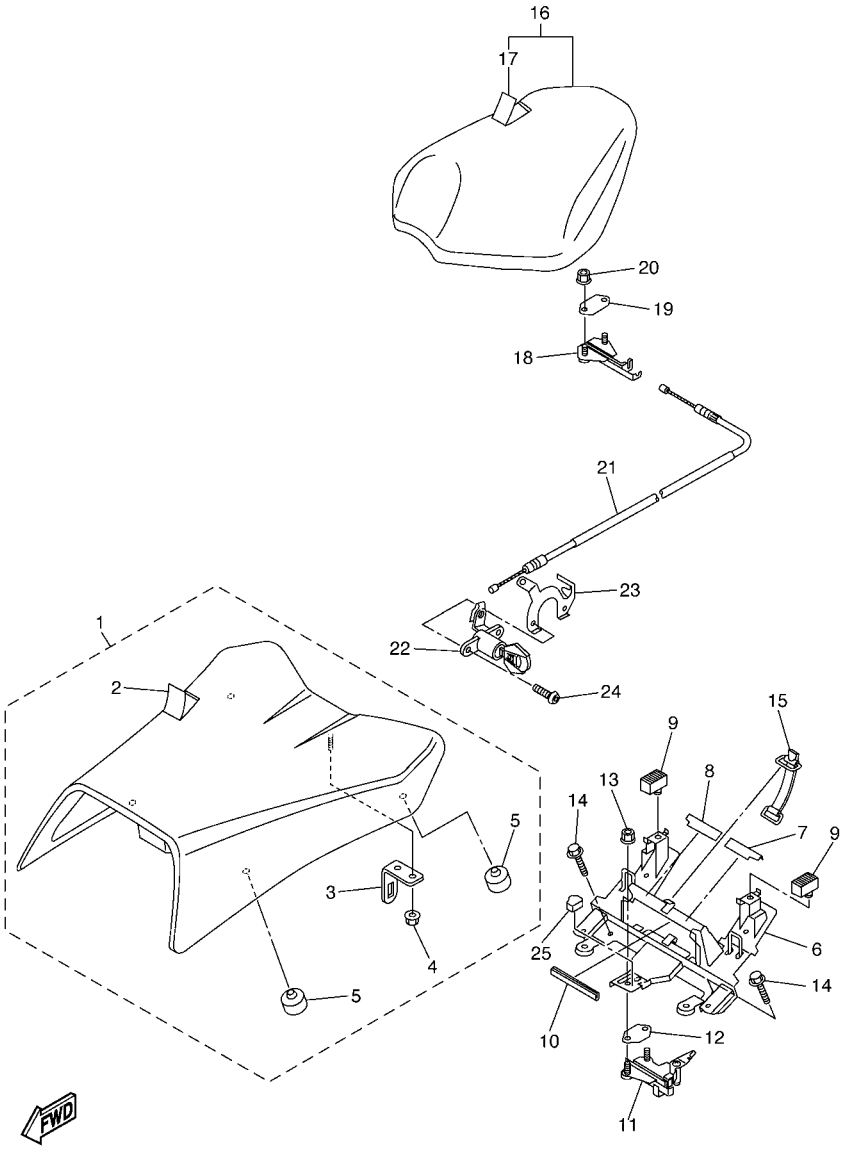

3C3D100-F290

FIG. 29 SEAT

REF. NO.	PART NO.	DESCRIPTION	3C3L	3C3M	3C3N			REMARKS
1	2D1–24710–00	SINGLE SEAT ASSY	1	1	1			
2	2D1–24711–00	.COVER, SINGLE SEAT	1	1	1			
3	4HM–24728–00	.BRACKET, SEAT	1	1	1			
4	95602–06200	.NUT, SELF-LOCKING	1	1	1			
5	278–27114–00	.STOPPER, MAIN STAND	4	4	4			
6	3C3–21341–01	BRACKET, SEAT 1	1	1	1			
7	2D1–2476U–00	PROTECTOR,1	1	1	1			
8	2D1–2476V–00	PROTECTOR,2	1	1	1			
9	3C3–24741–00	PAD, SEAT	2	2	2			
10	2D1–24785–00	MOLD, SEAT	1	1	1			
11	2D1–24780–02	SEAT LOCK ASSY	1	1	1			
12	4BP–24792–00	PLATE	1	1	1			
13	95702–06500	NUT, WITH WASHER	2	2	2			
14	95827–06020	BOLT, FLANGE	2	2	2			
15	18G–82131–00	BAND, BATTERY	1	1	1			
16	3C3–24750–00	TANDEM SEAT ASSY	1	1	1			
17	3C3–24751–00	.COVER, TANDEM SEAT	1	1	1			
18	4BP–24780–00	SEAT LOCK ASSY	1	1	1			
19	4BP–24792–00	PLATE	1	1	1			
20	95702–06500	NUT, WITH WASHER	2	2	2			
21	2D1–2478E–00	CABLE, SEAT LOCK	1	1	1			
22	2TV–W2470–00	ROTOR SET	1	1	1			
23	4XV–2117K–00	STAY, LOCK	1	1	1			
24	90149–06006	SCREW	2	2	2			
25	2D1–24665–00	DAMPER	1	1	1			

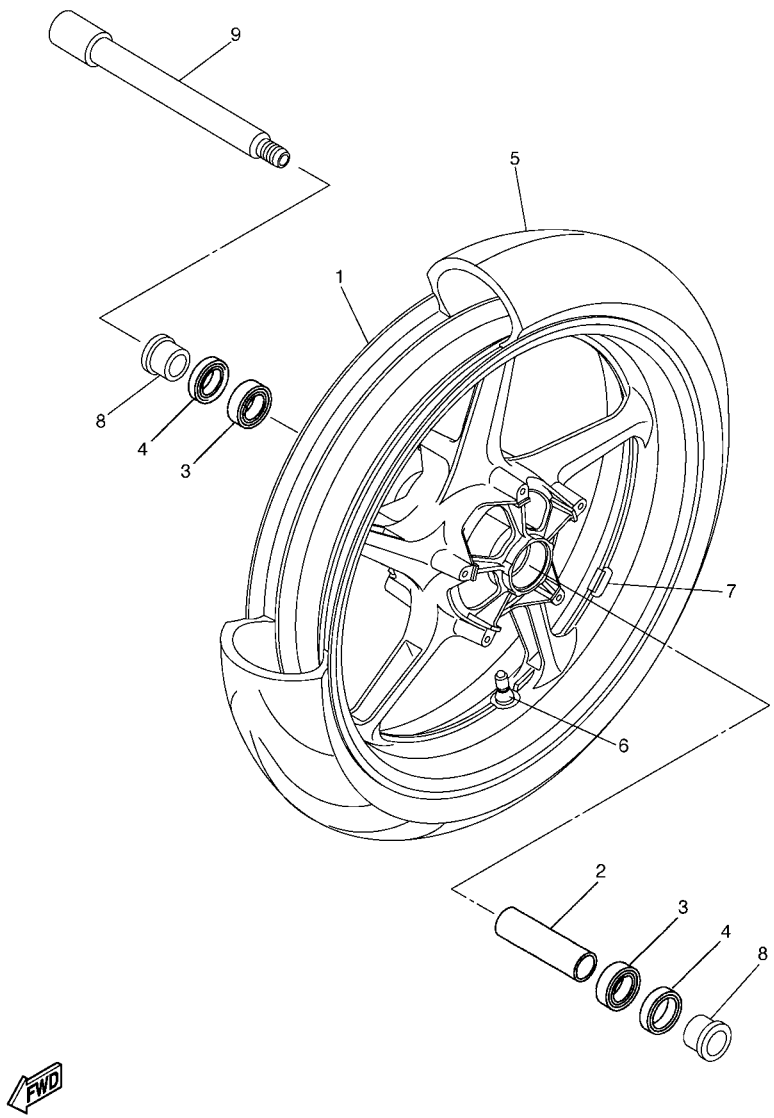

2D14300-F300

FIG. 30 FRONT WHEEL

REF. NO.	PART NO.	DESCRIPTION	3C3L	3C3M	3C3N			REMARKS
1	5VY–25168–00–8L	CAST WHEEL, FRONT	1	1	1			NG
2	4XV–25117–00	SPACER, BEARING	1	1	1			
3	93306–00420	BEARING	2	2	2			
4	93106–28043	OIL SEAL	2	2	2			
5	94112–17094	TIRE(120/70 ZR17M/C58W D221FA)	1	1	1			UR DUNLOP
	*	TIRE(120/70 ZR17M/C 58W PILOT)	1	1	1			UR LM MICHELIN
6	93900–00030	VALVE, RIM (TR412)	1	1	1			TAIHEIYO
7	5MT–25398–00	BALANCER, WHEEL (10G)	1	1	1			UN
	5MT–25398–10	BALANCER, WHEEL (20G)	1	1	1			UN
	5MT–25398–20	BALANCER, WHEEL (30G)	1	1	1			UN
8	90387–22002	COLLAR	2	2	2			
9	4XV–25181–10	AXLE, WHEEL	1	1	1			

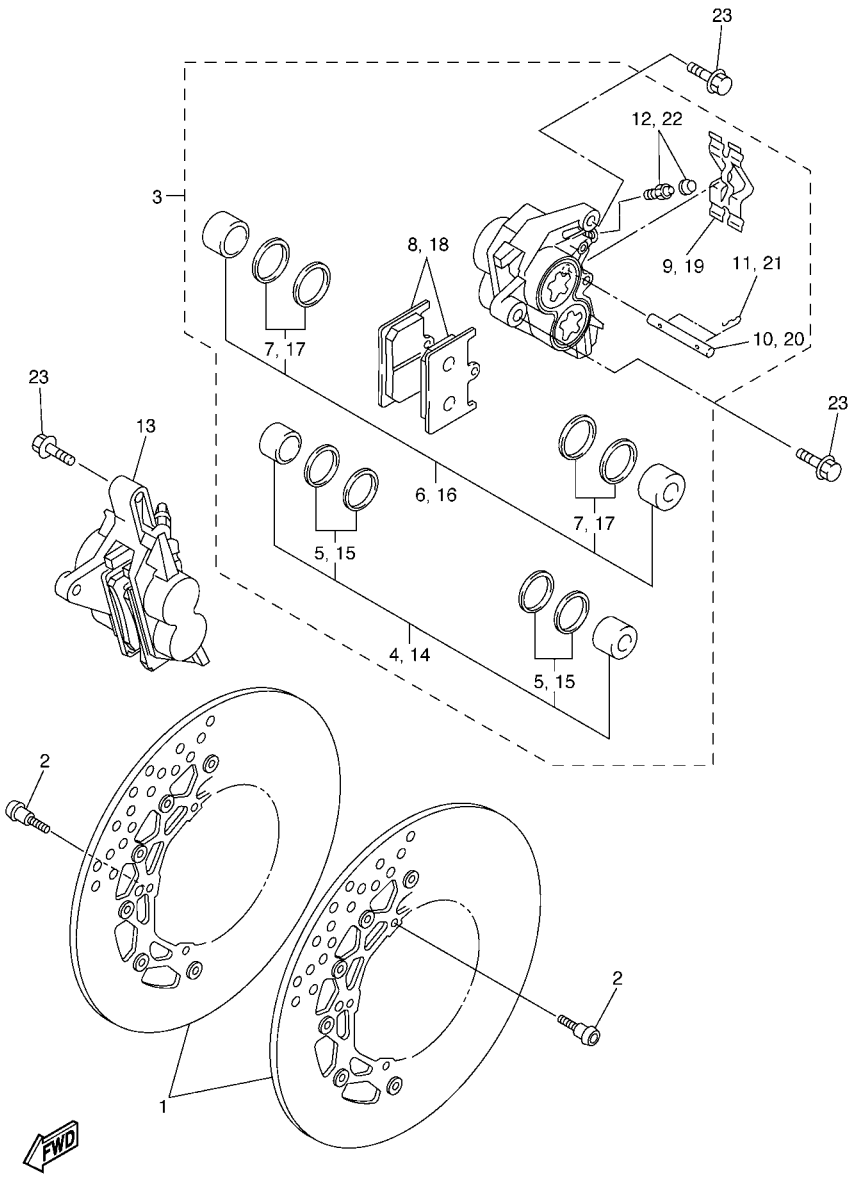

FIG. 31 FRONT BRAKE CALIPER

REF. NO.	PART NO.	DESCRIPTION	3C3L	3C3M	3C3N			REMARKS
1	5D0–2581T–00	DISK BRAKE ASSY	2	2	2			
2	90149–06043	SCREW	10	10	10			
3	2D1–2580T–00	CALIPER ASSY (LEFT)	1	1	1			
4	4SV–W0057–00	.PISTON ASSY, CALIPER	1	1	1			
5	3MA–W0047–10	..CALIPER SEAL KIT	1	1	1			
6	4SV–W0057–10	.PISTON ASSY, CALIPER	1	1	1			
7	3GM–W0047–10	..CALIPER SEAL KIT	1	1	1			
8	5SL–W0045–00	.BRAKE PAD KIT	1	1	1			
9	4SV–25919–00	.SUPPORT, PAD	1	1	1			
10	4SV–25924–00	.PIN, PAD	1	1	1			
11	3GM–25925–00	.CLIP	2	2	2			
12	1J3–W0048–00	.BLEED SCREW KIT	1	1	1			
13	2D1–2580U–00	CALIPER ASSY (RIGHT)	1	1	1			
14	4SV–W0057–00	.PISTON ASSY, CALIPER	1	1	1			
15	3MA–W0047–10	..CALIPER SEAL KIT	1	1	1			
16	4SV–W0057–10	.PISTON ASSY, CALIPER	1	1	1			
17	3GM–W0047–10	..CALIPER SEAL KIT	1	1	1			
18	5SL–W0045–00	.BRAKE PAD KIT	1	1	1			
19	4SV–25919–00	.SUPPORT, PAD	1	1	1			
20	4SV–25924–00	.PIN, PAD	1	1	1			
21	3GM–25925–00	.CLIP	2	2	2			
22	1J3–W0048–00	.BLEED SCREW KIT	1	1	1			
23	90105–10638	BOLT, FLANGE	4	4	4			

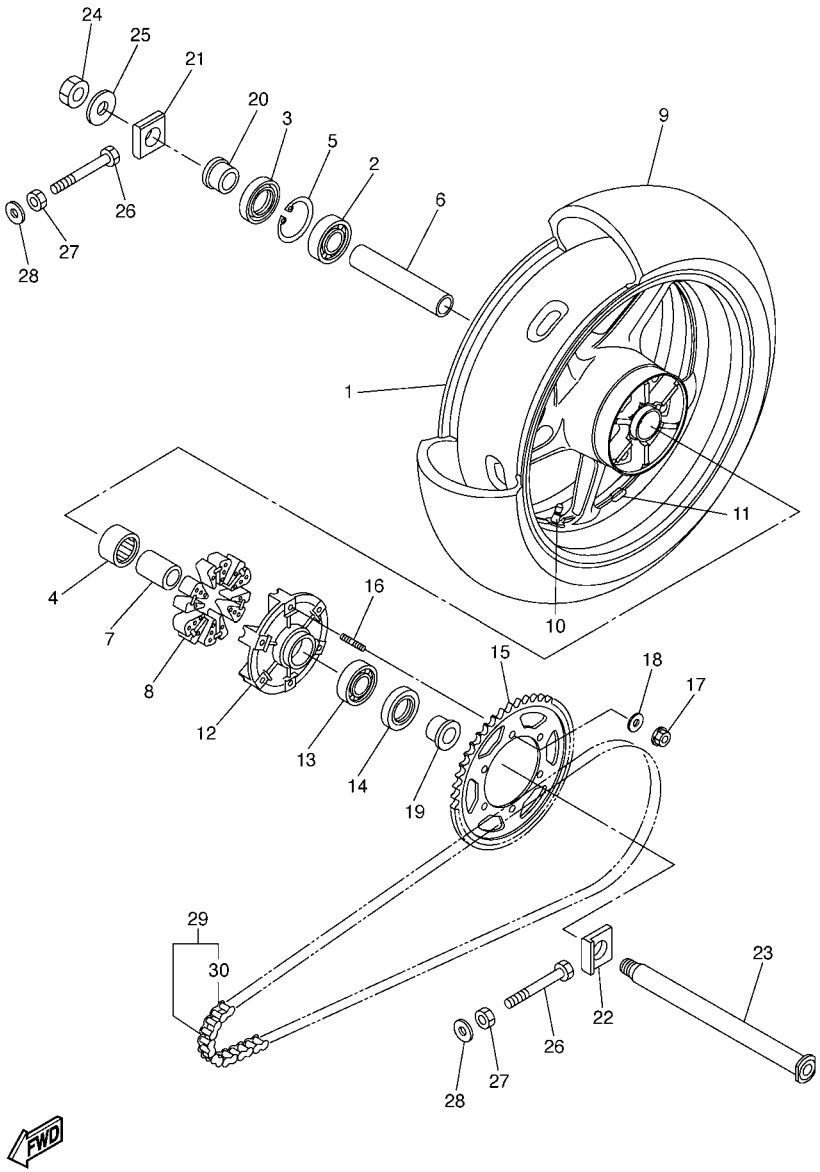

2D11300-E320

FIG. 32 REAR WHEEL

REF. NO.	PART NO.	DESCRIPTION	3C3L	3C3M	3C3N			REMARKS
1	5VY–25338–00–8L	CAST WHEEL, REAR	1	1	1			NG
2	93306–20531	BEARING	1	1	1			
3	93106–40013	OIL SEAL	1	1	1			
4	93317–33590	BEARING	1	1	1			
5	93420–61M07	CIRCLIP	1	1	1			
6	5PW–25317–00	SPACER, BEARING	1	1	1			
7	2D1–25377–00	COLLAR, WHEEL	1	1	1			
8	5VX–25364–00	DAMPER	6	6	6			
9	94119–17062	TIRE (190/50 ZR17M/C 73W D221)	1	1	1			UR DUNLOP
	*	TIRE(190/50 ZR17M/C 73W PILOT)	1	1	1			UR LM MICHELIN
10	93900–00030	VALVE, RIM (TR412)	1	1	1			TAIHEIYO
11	5MT–25398–00	BALANCER, WHEEL (10G)	1	1	1			UN
	5MT–25398–10	BALANCER, WHEEL (20G)	1	1	1			UN
	5MT–25398–20	BALANCER, WHEEL (30G)	1	1	1			UN
12	2D1–25366–00	CLUTCH, HUB	1	1	1			
13	93306–20531	BEARING	1	1	1			
14	93106–40013	OIL SEAL	1	1	1			
15	2D1–25445–20	SPROCKET, DRIVEN (45T)	1	1	1			
16	90116–10485	BOLT, STUD	6	6	6			
17	90185–10009	NUT, SELF-LOCKING	6	6	6			
18	90201–10021	WASHER, PLATE	6	6	6			
19	90387–28001	COLLAR	1	1	1			
20	2D1–25383–00	COLLAR, WHEEL	1	1	1			
21	5VY–25388–00	PULLER, CHAIN 1	1	1	1			
22	5VY–25389–00	PULLER, CHAIN 2	1	1	1			
23	2D1–25381–00	AXLE, WHEEL	1	1	1			
24	90185–24007	NUT, SELF-LOCKING	1	1	1			

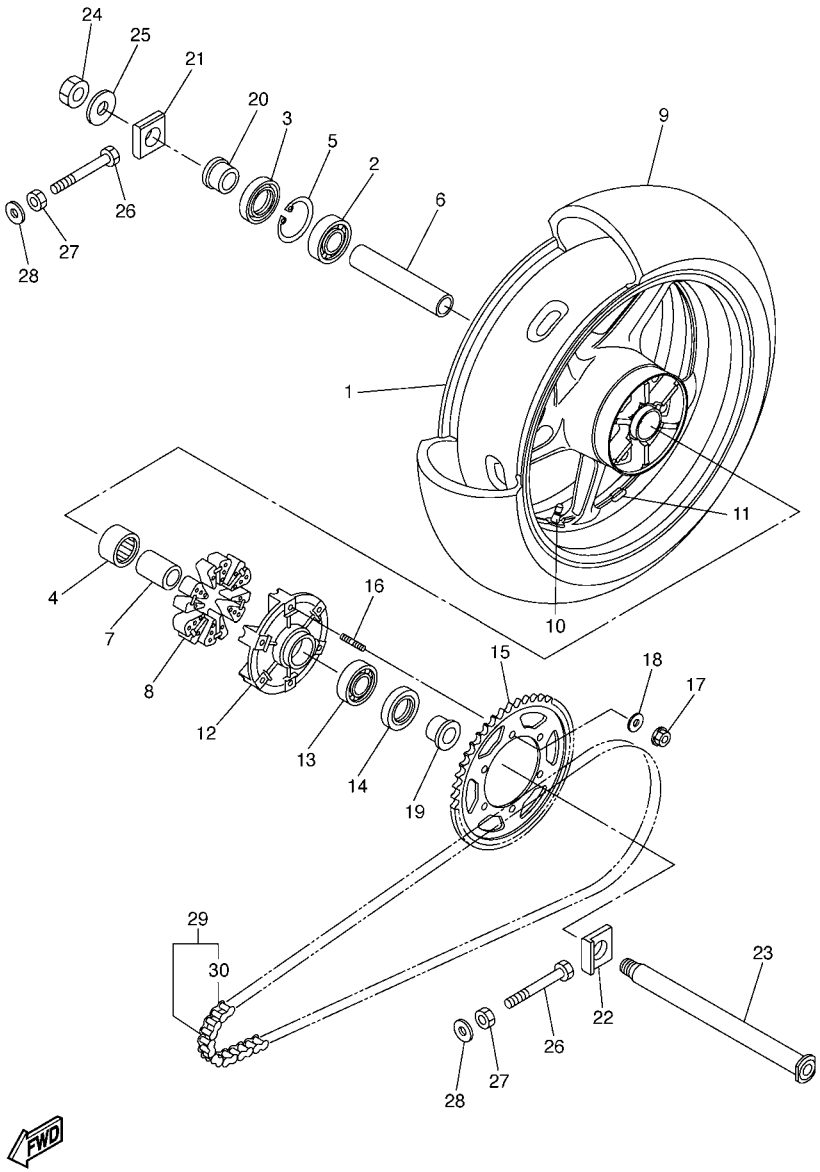

2D11300-E320

FIG. 32 REAR WHEEL

REF. NO.	PART NO.	DESCRIPTION	3C3L	3C3M	3C3N			REMARKS
25	90201–25020	WASHER, PLATE	1	1	1			
26	90101–08013	BOLT	2	2	2			
27	95302–08600	NUT	2	2	2			
28	90201–08057	WASHER, PLATE	2	2	2			
29	94582–10122	CHAIN (DID50VA8-122LL)	1	1	1			
30	94682–05031	.JOINT, CHAIN (DID 50VA8-ZJ)	1	1	1			

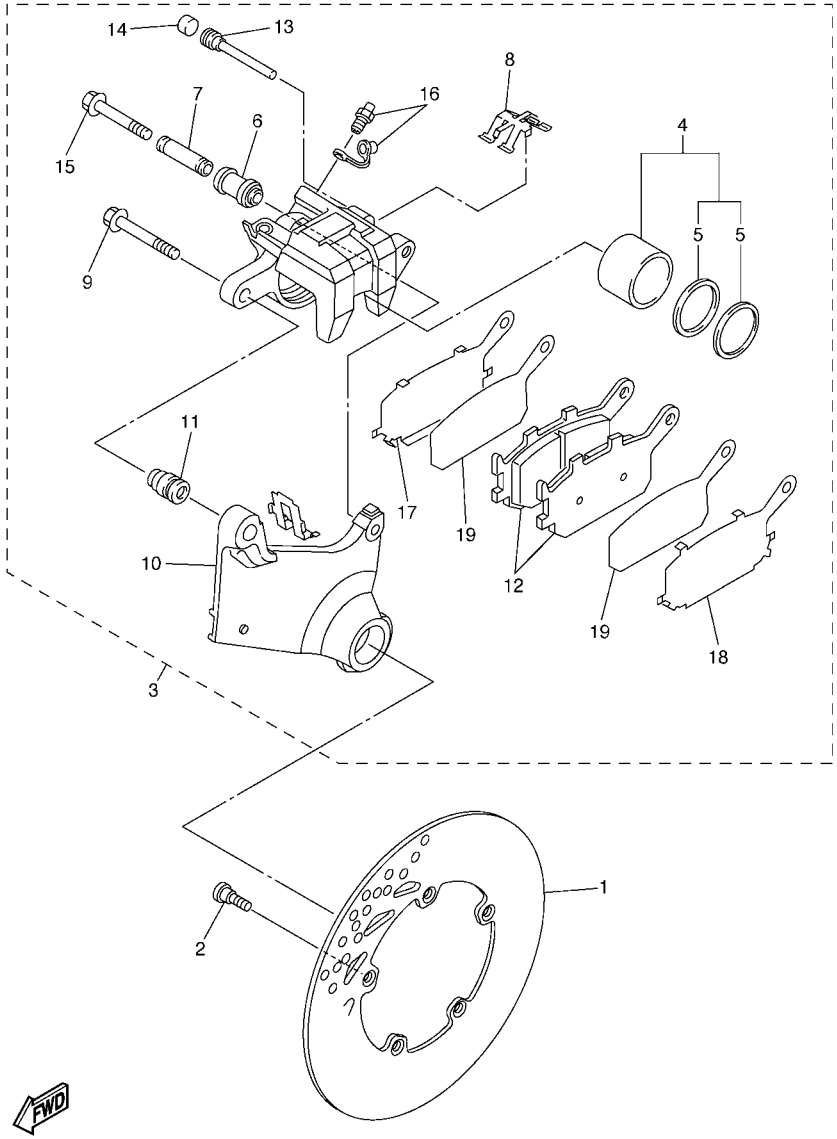

2D11300-E330

FIG. 33 REAR BRAKE CALIPER

REF. NO.	PART NO.	DESCRIPTION	3C3L	3C3M	3C3N			REMARKS
1	2D1–2582W–00	DISK, REAR BRAKE 2	1	1	1			
2	90149–08009	SCREW	5	5	5			
3	2D1–2580W–00	CALIPER ASSY, REAR 2	1	1	1			
4	5SL–W0057–00	.PISTON ASSY, CALIPER	1	1	1			
5	5SL–W0047–00	..CALIPER SEAL KIT	1	1	1			
6	5SL–25917–00	.BOOT, CALIPER	1	1	1			
7	5SL–25838–00	.SLEEVE, CALIPER	1	1	1			
8	5SL–25919–00	.SUPPORT, PAD	1	1	1			
9	5SL–25914–00	.PIN, SLIDE	1	1	1			
10	5VX–25921–50	.BRACKET, SUPPORT	1	1	1			
11	3JD–25917–00	.BOOT, CALIPER	1	1	1			
12	5VX–W0046–00	.BRAKE PAD KIT 2	1	1	1			
13	8CR–25924–00	.PIN, PAD	1	1	1			
14	5DH–25916–00	.PLUG	1	1	1			
15	5SL–25926–00	.BOLT	1	1	1			
16	1UY–W0048–00	.BLEED SCREW KIT	1	1	1			
17	5SL–25827–00	.SHIM, CALIPER	1	1	1			
18	5SL–25827–10	.SHIM, CALIPER	1	1	1			
19	5SL–25828–00	.SHIM, CALIPER	2	2	2			

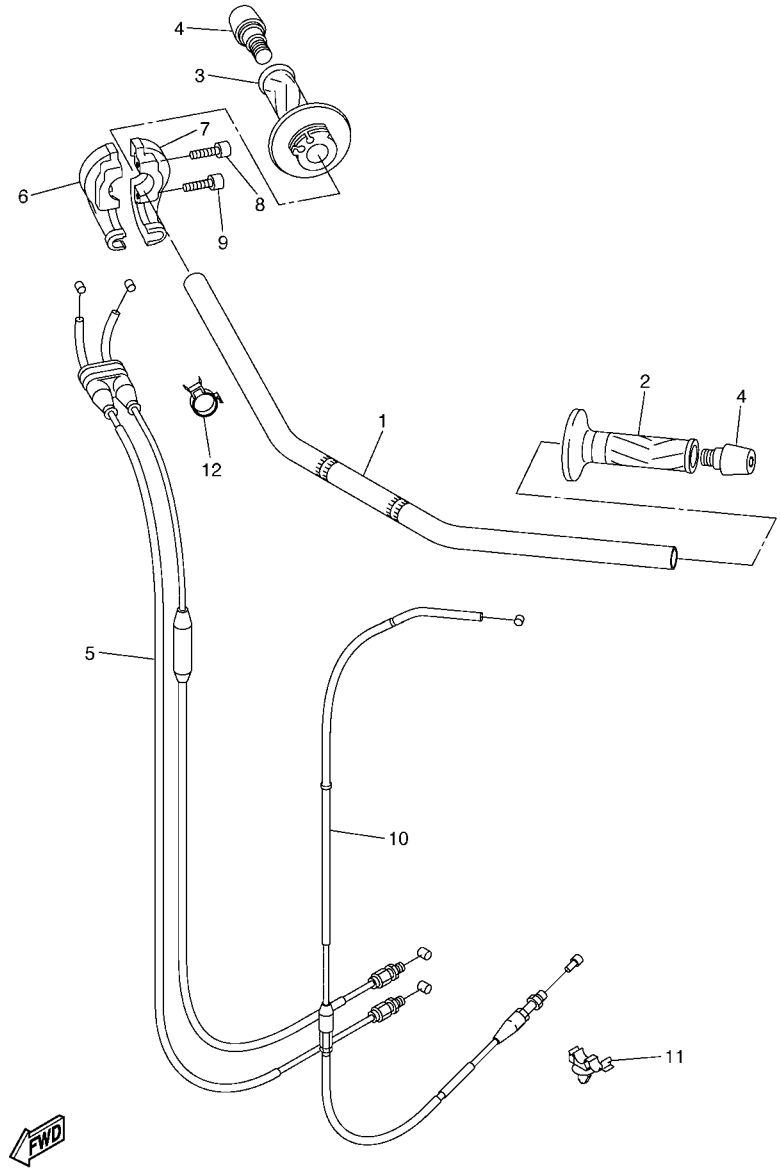

3C3A300-F340

FIG. 34 STEERING HANDLE & CABLE

REF. NO.	PART NO.	DESCRIPTION	3C3L	3C3M	3C3N			REMARKS
1	2D1–26111–01	HANDLEBAR	1	1	1			
2	4YR–26241–02	GRIP (LEFT)	1	1	1			
3	4YR–26240–02	GRIP ASSY	1	1	1			
4	51J–26246–01	END, GRIP	2	2	2			
5	2D1–26302–00	THROTTLE CABLE ASSY	1	1	1			
6	3LN–26281–01	CAP, GRIP UPPER	1	1	1			
7	4BP–26282–00	CAP, GRIP LOWER	1	1	1			
8	91317–05020	BOLT	1	1	1			
9	91317–05025	BOLT	1	1	1			
10	3C3–26335–00	CABLE, CLUTCH	1	1	1			
11	90464–10008	CLAMP	1	1	1			
12	90464–20191	CLAMP	1	1	1			

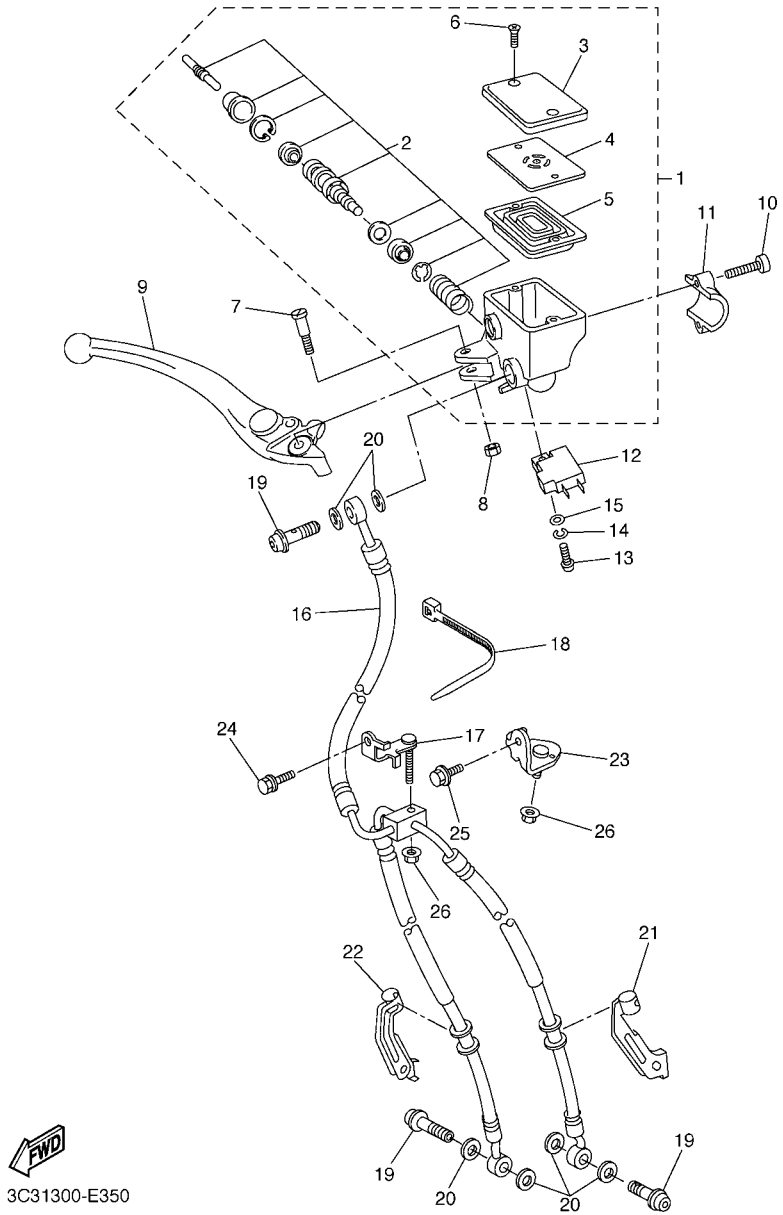

FIG. 35 FRONT MASTER CYLINDER

REF. NO.	PART NO.	DESCRIPTION	3C3L	3C3M	3C3N			REMARKS
1	3C3–W2587–00	MASTER CYLINDER SUB ASSY	1	1	1			
2	2D1–W0041–00	.CYLINDER KIT, MASTER	1	1	1			
3	5VS–25852–00	.CAP, RESERVOIR	1	1	1			
4	5VS–25855–00	.BUSH,DIAPHRAGM	1	1	1			
5	5VS–25854–00	.DIAPHRAGM, RESERVOIR	1	1	1			
6	5VS–2589H–00	.SCREW	2	2	2			
7	5VS–2589F–00	BOLT, LEVER	1	1	1			
8	95617–06100	NUT, U	1	1	1			
9	5VS–83922–00	LEVER 2	1	1	1			
10	5VS–26332–00	BOLT	2	2	2			
11	5VS–25867–00	BRACKET, MASTER CYLINDER	1	1	1			
12	4HM–83980–00	FRONT STOP SWITCH ASSY	1	1	1			
13	98502–04012	SCREW, PAN HEAD	1	1	1			
14	92902–04100	WASHER, SPRING	1	1	1			
15	92902–04600	WASHER, PLATE	1	1	1			
16	3C3–25872–00	HOSE, BRAKE 1	1	1	1			
17	2D1–23857–00	HOLDER	1	1	1			
18	3MA–82591–00	BAND	1	1	1			
19	90401–10172	BOLT, UNION	3	3	3			
20	90430–10005	GASKET	6	6	6			
21	2D1–25875–00	HOLDER, BRAKE HOSE 1	1	1	1			
22	2D1–25876–00	HOLDER, BRAKE HOSE 2	1	1	1			
23	3C3–23378–00	BRACKET, HORN	1	1	1			
24	95817–06012	BOLT, FLANGE	1	1	1			
25	90105–06556	BOLT, FLANGE	1	1	1			
26	95707–06500	NUT, FLANGE	2	2	2			

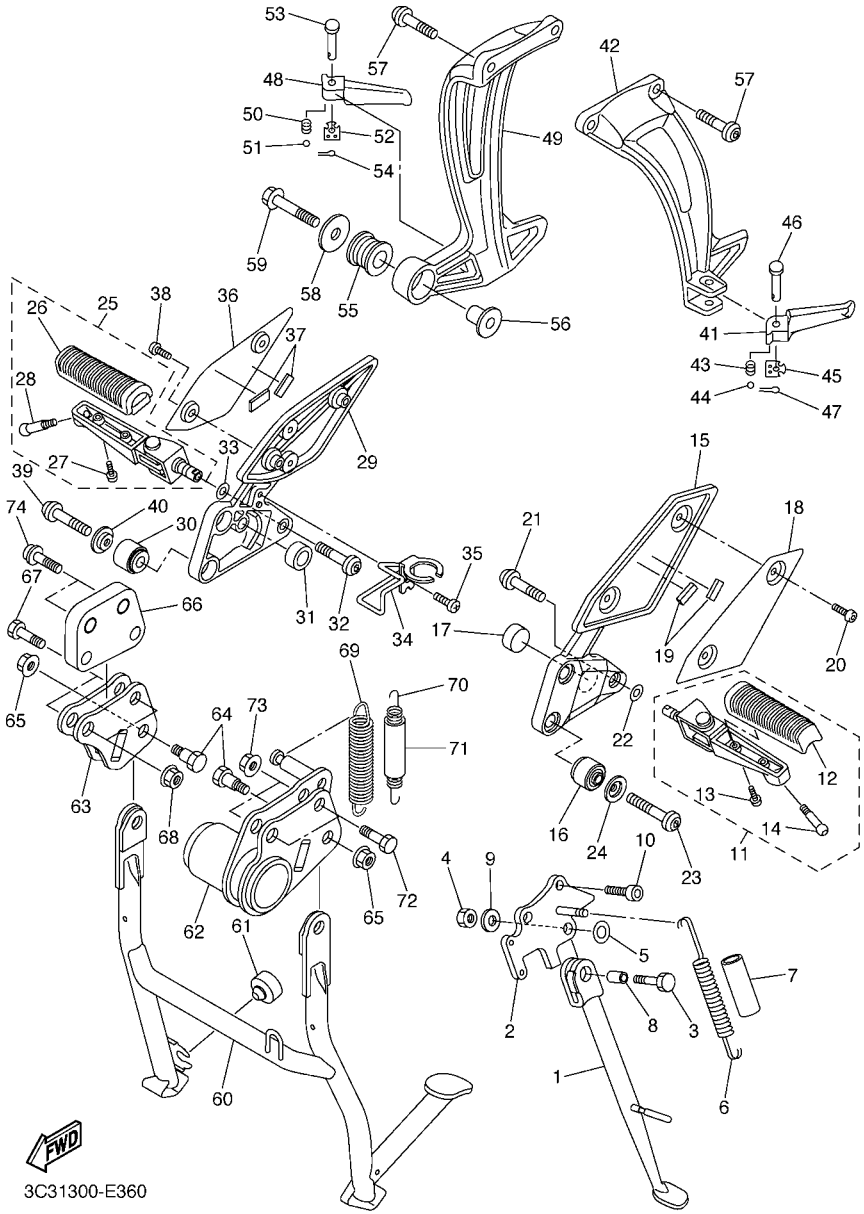

FIG. 36 STAND & FOOTREST

REF. NO.	PART NO.	DESCRIPTION	3C3L	3C3M	3C3N			REMARKS
1	2D1–27311–00	STAND, SIDE	1	1	1			
2	2D1–27321–00	BRACKET, SIDE STAND	1	1	1			
3	90101–10025	BOLT	1	1	1			
4	90185–10023	NUT, SELF-LOCKING	1	1	1			
5	90201–16027	WASHER, PLATE	1	1	1			
6	90506–18020	SPRING, TENSION	1	1	1			
7	90445–19002	HOSE (L60)	1	1	1			
8	90387–10050	COLLAR	1	1	1			
9	90201–10035	WASHER, PLATE	1	1	1			
10	90110–10010	BOLT, HEXAGON SOCKET HEAD	2	2	2			
11	2D1–27410–00	FRONT FOOTREST ASSY (LEFT)	1	1	1			
12	4BP–27413–00	.COVER, FOOTREST	1	1	1			
13	90157–05025	.SCREW, PAN HEAD	2	2	2			
14	90109–08174	.BOLT	1	1	1			
15	2D1–27442–00	BRACKET 2	1	1	1			
16	1NL–27424–00	DAMPER, FOOTREST 2	2	2	2			
17	5VX–27114–00	STOPPER, MAIN STAND	1	1	1			
18	2D1–27486–00	COVER 1	1	1	1			
19	1HX–27415–00	PLATE, DAMPER	2	2	2			
20	90111–05015	BOLT,HEX. SOCKET BUTTON	2	2	2			
21	90111–10039	BOLT,HEX. SOCKET BUTTON	1	1	1			
22	90206–17084	WASHER, WAVE	1	1	1			
23	90110–08071	BOLT, HEXAGON SOCKET HEAD	2	2	2			
24	90209–08295	WASHER	2	2	2			
25	2D1–27420–00	FRONT FOOTREST ASSY (RIGHT)	1	1	1			
26	4BP–27413–00	.COVER, FOOTREST	1	1	1			
27	90157–05025	.SCREW, PAN HEAD	2	2	2			

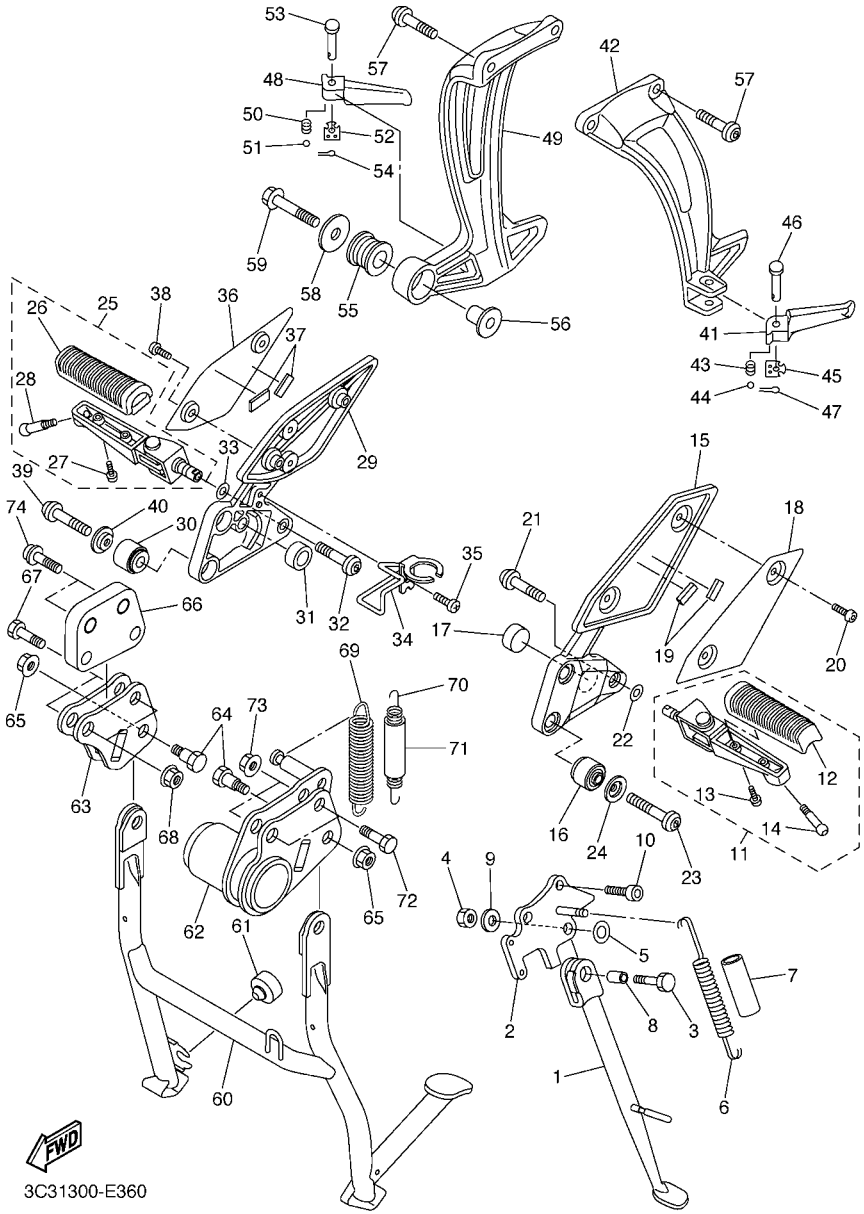

FIG. 36 STAND & FOOTREST

REF. NO.	PART NO.	DESCRIPTION	3C3L	3C3M	3C3N			REMARKS
28	90109–08174	.BOLT	1	1	1			
29	2D1–27443–00	BRACKET 3	1	1	1			
30	1NL–27424–00	DAMPER, FOOTREST 2	2	2	2			
31	5VX–27114–00	STOPPER, MAIN STAND	1	1	1			
32	90111–10039	BOLT,HEX. SOCKET BUTTON	1	1	1			
33	90206–17084	WASHER, WAVE	1	1	1			
34	2D1–2144G–00	STAY, STOP SWITCH	1	1	1			
35	95802–06008	BOLT, FLANGE	1	1	1			
36	2D1–27487–00	COVER 2	1	1	1			
37	1HX–27415–00	PLATE, DAMPER	2	2	2			
38	90111–05015	BOLT,HEX. SOCKET BUTTON	2	2	2			
39	90110–08071	BOLT, HEXAGON SOCKET HEAD	2	2	2			
40	90209–08295	WASHER	2	2	2			
41	3VR–27431–01	FOOTREST, REAR 1	1	1	1			
42	2D1–2741L–00	BRACKET 4	1	1	1			
43	90501–12743	SPRING, COMPRESSION	1	1	1			
44	93501–04011	BALL	1	1	1			
45	5VX–27437–00	WASHER, SPECIAL	1	1	1			
46	91702–08040	PIN, CLEVIS	1	1	1			
47	91401–25015	PIN, COTTER	1	1	1			
48	3VR–27441–01	FOOTREST, REAR 2	1	1	1			
49	2D1–2742L–00	BRACKET 5	1	1	1			
50	90501–12743	SPRING, COMPRESSION	1	1	1			
51	93501–04011	BALL	1	1	1			
52	5VX–27437–00	WASHER, SPECIAL	1	1	1			
53	91702–08040	PIN, CLEVIS	1	1	1			
54	91401–25015	PIN, COTTER	1	1	1			

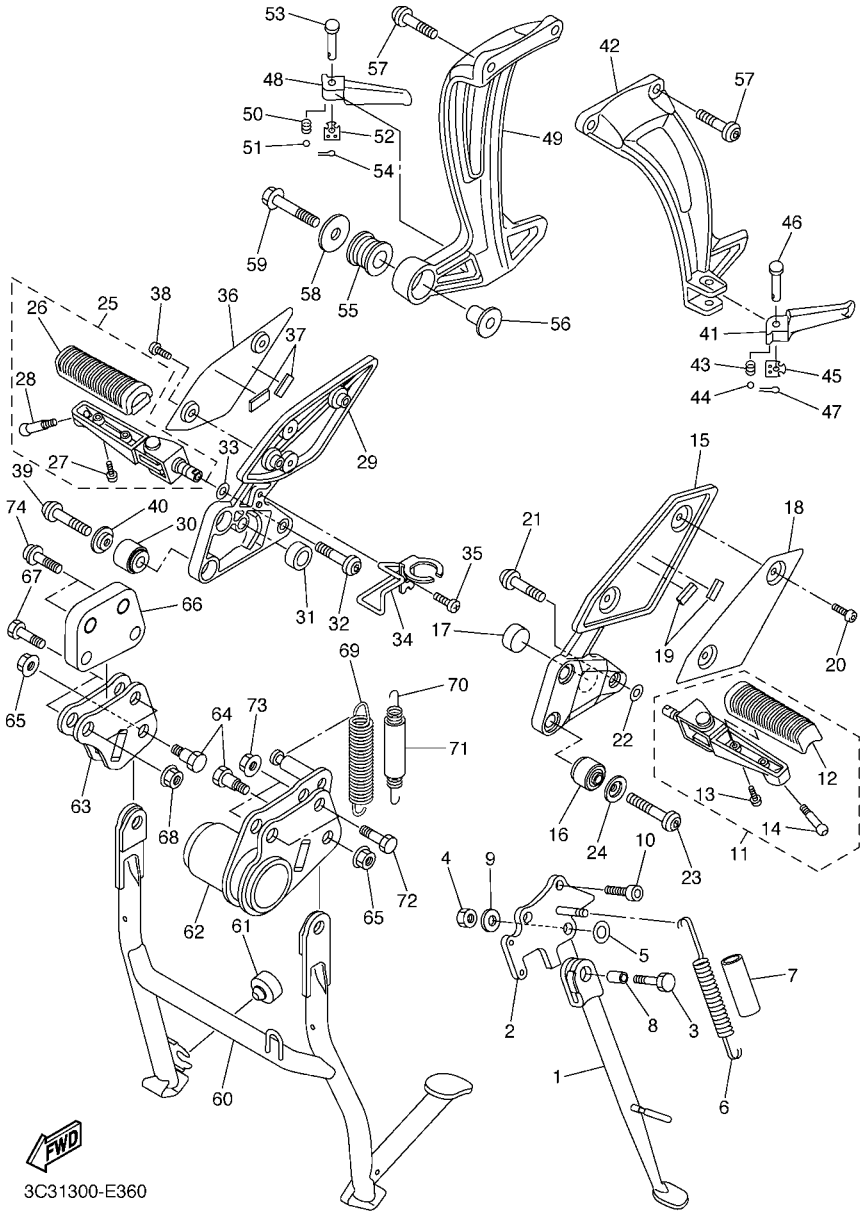

FIG. 36 STAND & FOOTREST

REF. NO.	PART NO.	DESCRIPTION	3C3L	3C3M	3C3N			REMARKS
55	36Y–27424–01	DAMPER, FOOTREST 2	1	1	1			
56	90387–10636	COLLAR	1	1	1			
57	90109–085G6	BOLT	4	4	4			
58	90201–10669	WASHER, PLATE	1	1	1			
59	95814–10040	BOLT, FLANGE	1	1	1			
60	3C3–27111–00	STAND, MAIN	1	1	1			
61	371–27114–00	STOPPER, MAIN STAND	1	1	1			
62	3C3–27151–01	BRACKET, MAIN STAND	1	1	1			
63	3C3–27152–00	BRACKET, MAIN STAND 2	1	1	1			
64	90109–10029	BOLT	2	2	2			
65	95602–10200	NUT, U FLANGE	2	2	2			
66	3C3–274A3–00	BEACKET,ADAPTER 1	1	1	1			
67	90101–10033	BOLT	2	2	2			
68	95602–10200	NUT, U FLANGE	2	2	2			
69	90506–40007	SPRING, TENSION	1	1	1			
70	90506–23010	SPRING, TENSION	1	1	1			
71	90445–19003	HOSE	1	1	1			
72	90101–10004	BOLT	2	2	2			
73	95607–10200	NUT, U FLANGE	2	2	2			
74	90109–105G7	BOLT	2	2	2			

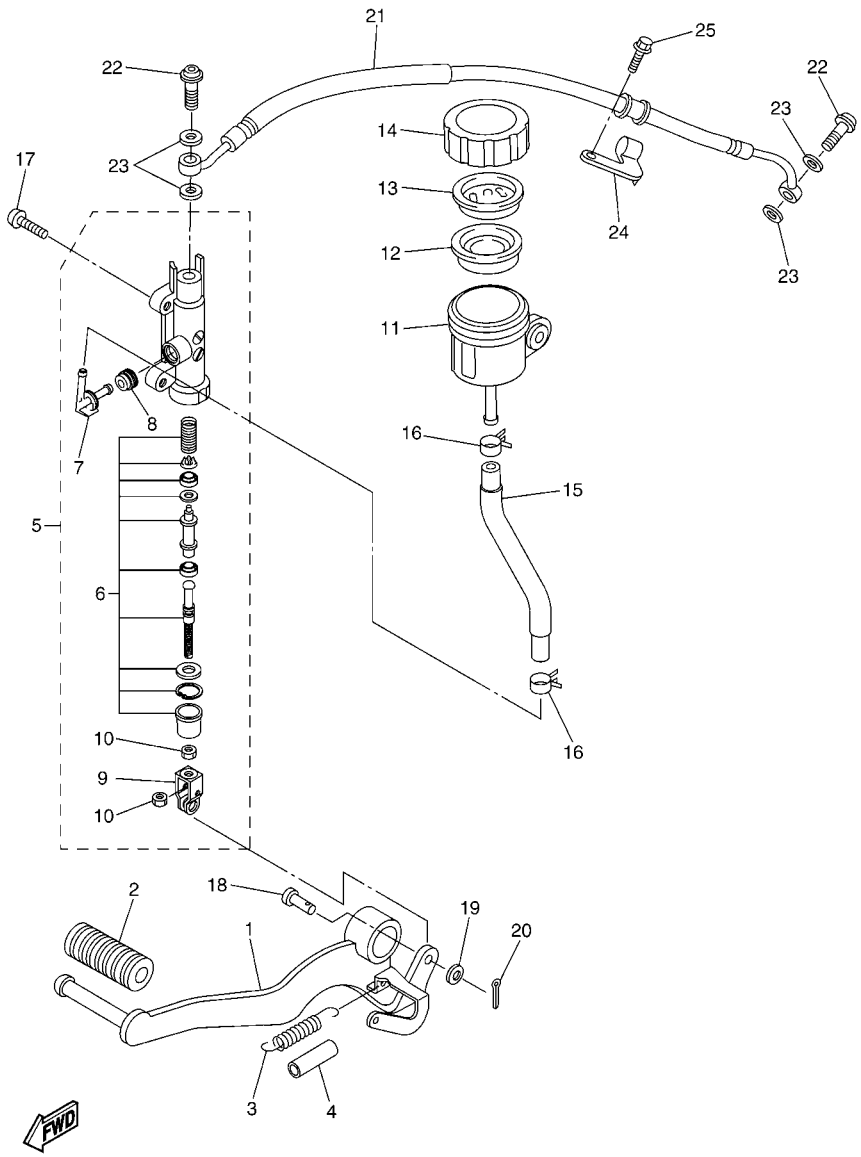

3C3H300-G370

FIG. 37 REAR MASTER CYLINDER

REF. NO.	PART NO.	DESCRIPTION	3C3L	3C3M	3C3N			REMARKS
1	2D1–27211–00	PEDAL, BRAKE	1	1	1			
2	5EB–18113–00	COVER, SHIFT PEDAL	1	1	1			
3	90506–20014	SPRING, TENSION	1	1	1			
4	90446–15386	HOSE	1	1	1			
5	2D1–2583V–00	RR. MASTER CYLINDER ASSY.	1	1	1			
6	5VX–W0042–50	.CYLINDER KIT, MASTER	1	1	1			
7	2D1–2582A–00	.JOINT	1	1	1			
8	4BP–2585F–00	.BUSH	1	1	1			
9	4BP–27222–01	.JOINT	1	1	1			
10	90170–08010	.NUT	2	2	2			
11	2D1–25894–00	TANK, RESERVOIR	1	1	1			
12	5SL–25854–00	DIAPHRAGM, RESERVOIR	1	1	1			
13	5SL–25855–00	BUSH,DIAPHRAGM	1	1	1			
14	5SL–25852–00	CAP, RESERVOIR	1	1	1			
15	2D1–25895–00	HOSE, RESERVOIR	1	1	1			
16	90467–120A3	CLIP	2	2	2			
17	92014–08020	BOLT, BUTTON HEAD	2	2	2			
18	90240–08005	PIN, CLEVIS	1	1	1			
19	90201–08066	WASHER, PLATE	1	1	1			
20	91401–20012	PIN, COTTER	1	1	1			
21	2D1–25874–00	HOSE, BRAKE	1	1	1			
22	90401–10172	BOLT, UNION	2	2	2			
23	90430–10005	GASKET	4	4	4			
24	2D1–25886–00	HOLDER, BRAKE HOSE	1	1	1			
25	90119–05020	BOLT, WITH WASHER	1	1	1			

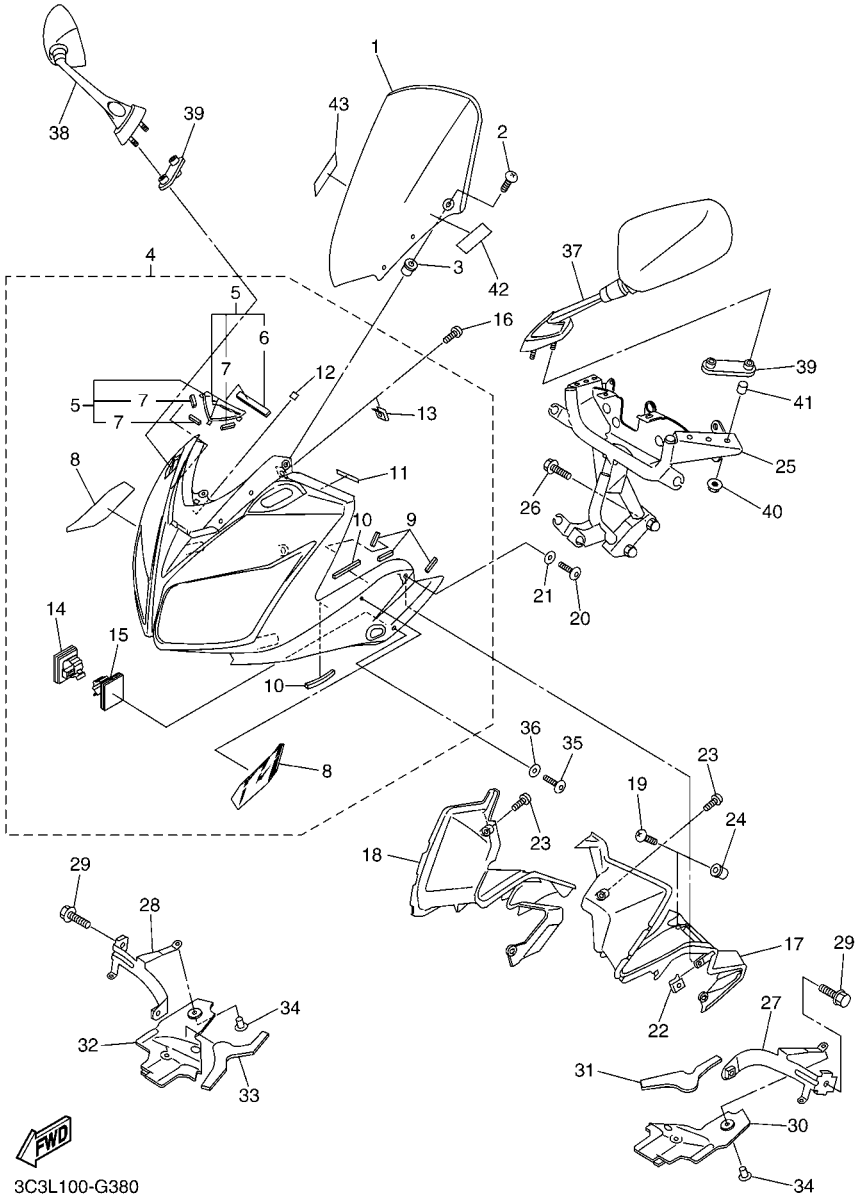

FIG. 38 COWLING 1

REF. NO.	PART NO.	DESCRIPTION	3C3L	3C3M	3C3N			REMARKS
1	3C3–28381–10	WINDSHIELD	1	1	1			
2	90150–05024	SCREW, ROUND HEAD	6	6	6			
3	90179–05523	NUT	6	6	6			
4	3C3–Y283G–W0–P5	BODY, FRONT UPPER 1	1	1	1			UR FOR DNMG
	3C3–Y283G–X0–P2	BODY, FRONT UPPER 1	1	1	1			UR FOR DRMK
5	3C3–Y283W–10	.COVER ASSY	1	1	1			
6	3C3–28371–01	..DAMPER	1	1	1			
7	3C3–28372–00	..DAMPER	3	3	3			
8	2D1–2163G–70	.EMBLEM 1	2	2	2			UR FOR DNMG
	2D1–2163G–80	.EMBLEM 1	2	2	2			UR FOR DRMK
9	3C3–2837J–00	.DAMPER 5	6	6	6			
10	4XV–2834E–00	.DAMPER 3	4	4	4			
11	3P6–28307–00	.SEAL	2	2	2			
12	5JW–23844–00	.SEAL	1	1	1			
13	90183–05076	.NUT, SPRING	2	2	2			
14	90464–62085	.CLAMP	1	1	1			
15	90464–20003	.CLAMP	1	1	1			
16	90154–05007	SCREW, BINDING	2	2	2			
17	3C3–2836K–00	PANEL, INNER 1	1	1	1			
18	3C3–2836L–00	PANEL, INNER 2	1	1	1			
19	90154–05007	SCREW, BINDING	2	2	2			
20	90110–06200	BOLT, HEXAGON SOCKET HEAD	2	2	2			
21	90202–06170	WASHER, PLATE	2	2	2			
22	90183–06053	NUT, SPRING	2	2	2			
23	90154–05007	SCREW, BINDING	2	2	2			
24	90179–05523	NUT	2	2	2			
25	3C3–28356–00	STAY 1	1	1	1			

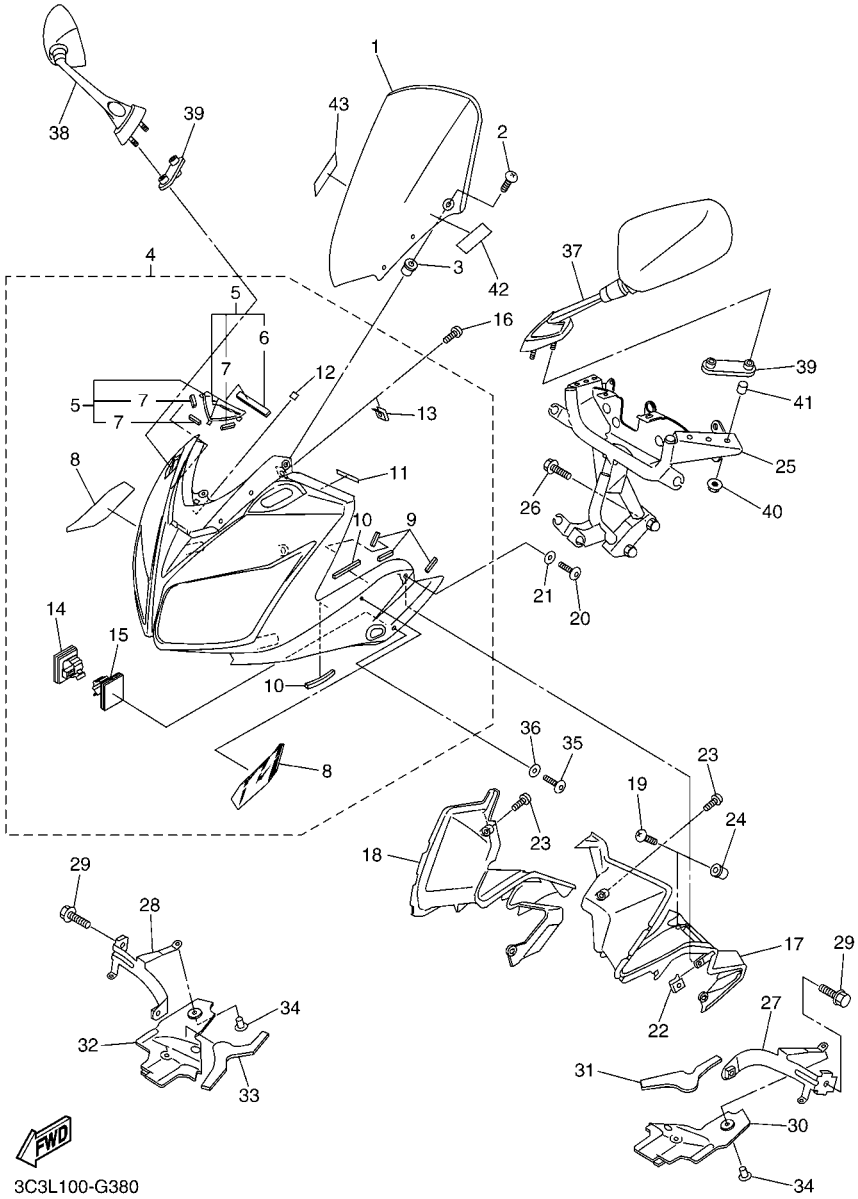

FIG. 38 COWLING 1

REF. NO.	PART NO.	DESCRIPTION	3C3L	3C3M	3C3N			REMARKS
26	95827–08035	BOLT, FLANGE	2	2	2			
27	3C3–2836A–00	BRACKET 1	1	1	1			
28	3C3–2836E–00	BRACKET 2	1	1	1			
29	95807–06010	BOLT, FLANGE	2	2	2			
30	3C3–2835U–00	PANEL 1	1	1	1			
31	3C3–2834E–00	DAMPER 3	1	1	1			
32	3C3–2835V–00	PANEL 2	1	1	1			
33	3C3–2834F–00	DAMPER	1	1	1			
34	90269–06008	RIVET	4	4	4			
35	90110–06200	BOLT, HEXAGON SOCKET HEAD	2	2	2			
36	90202–06170	WASHER, PLATE	2	2	2			
37	3C3–26280–00	REAR VIEW MIRROR ASSY (LEFT)	1	1	1			
38	3C3–26290–00	REAR VIEW MIRROR ASSY (RIGHT)	1	1	1			
39	3C3–26298–00	PLATE, MIRROR FITTING 1	2	2	2			
40	95707–06500	NUT, FLANGE	4	4	4			
41	90387–064T3	COLLAR	4	4	4			
42	5JW–2835Y–00	LABEL, CAUTION	1	1	1			
43	5JW–2835Y–10	LABEL, CAUTION			1			

FIG. 39 GENERATOR

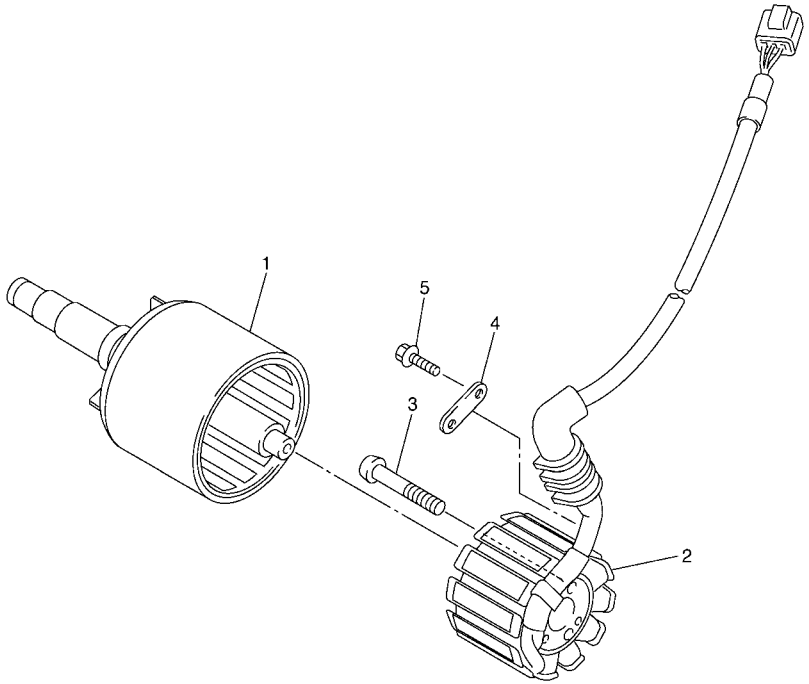

5VY1300-C400

REF. NO.	PART NO.	DESCRIPTION	3C3L	3C3M	3C3N			REMARKS
1	5VY–81450–00	ROTOR ASSY	1	1	1			
2	2D1–81410–01	STATOR ASSY	1	1	1			
3	90149–06067	SCREW	3	3	3			
4	4C8–15191–00	PLATE	1	1	1			
5	90105–06078	BOLT, FLANGE	1	1	1			

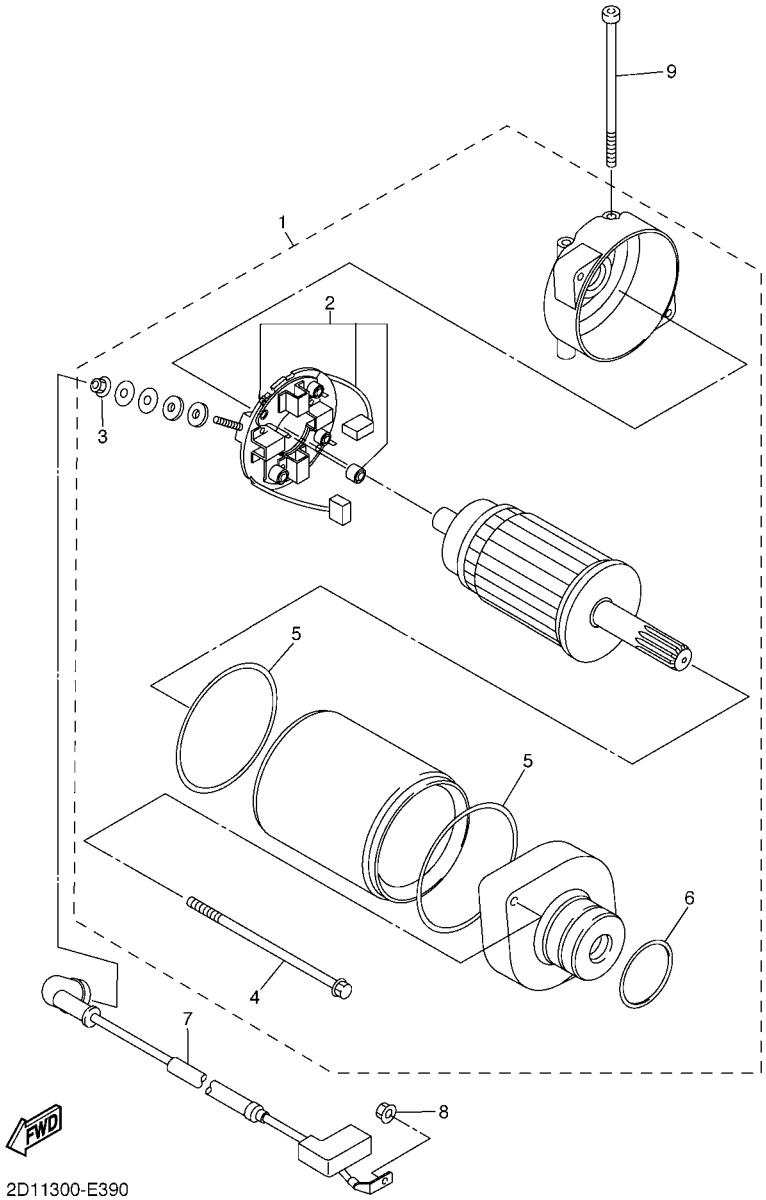

FIG. 40 STARTING MOTOR

REF. NO.	PART NO.	DESCRIPTION	3C3L	3C3M	3C3N			REMARKS
1	2D1–81890–00	MOTOR ASSY	1	1	1			
2	3AJ–81801–00	.BRUSH SET	1	1	1			
3	4XV–8182A–00	.NUT	1	1	1			
4	2D1–81826–00	.BOLT	2	2	2			
5	11H–81844–00	.GASKET	2	2	2			
6	1FK–81847–00	.O-RING	1	1	1			
7	2D1–81815–00	CORD, STARTER MOTOR	1	1	1			
8	4XV–8182A–00	NUT	1	1	1			
9	91312–06080	BOLT	2	2	2			

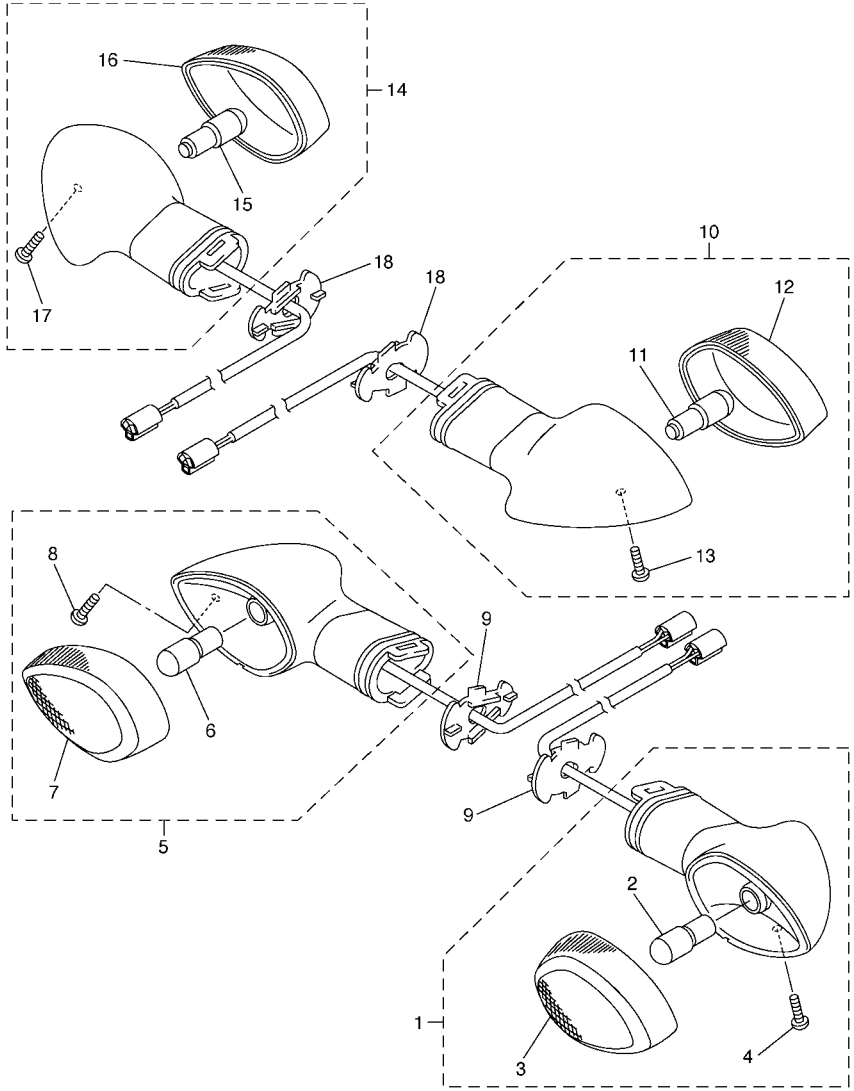

2C05100-E410

FIG. 41 FLASHER LIGHT

REF. NO.	PART NO.	DESCRIPTION	3C3L	3C3M	3C3N			REMARKS
1	5PW–83310–10	FRONT FLASHER LIGHT ASSY 1	1	1	1			
2	5GJ–83331–00	.BULB, FLASHER(12V-21/5W T20)	1	1	1			
3	5PW–8333A–10	.LENS COMP	1	1	1			
4	97706–04012	.SCREW, TAPPING	1	1	1			
5	5PW–83320–10	FRONT FLASHER LIGHT ASSY 2	1	1	1			
6	5GJ–83331–00	.BULB, FLASHER(12V-21/5W T20)	1	1	1			
7	5PW–8334A–10	.LENS COMP	1	1	1			
8	97706–04012	.SCREW, TAPPING	1	1	1			
9	2D1–83318–00	STAY, FLASHER 1	2	2	2			
10	3C3–83330–30	REAR FLASHER LIGHT ASSY 1	1	1	1			
11	5PW–83331–00	.BULB (12V-21/5W T20)	1	1	1			
12	5PW–8334A–10	.LENS COMP	1	1	1			
13	97706–04012	.SCREW, TAPPING	1	1	1			
14	3C3–83340–30	REAR FLASHER LIGHT ASSY 2	1	1	1			
15	5PW–83331–00	.BULB (12V-21/5W T20)	1	1	1			
16	5PW–8333A–10	.LENS COMP	1	1	1			
17	97706–04012	.SCREW, TAPPING	1	1	1			
18	2D1–83318–00	STAY, FLASHER 1	2	2	2			

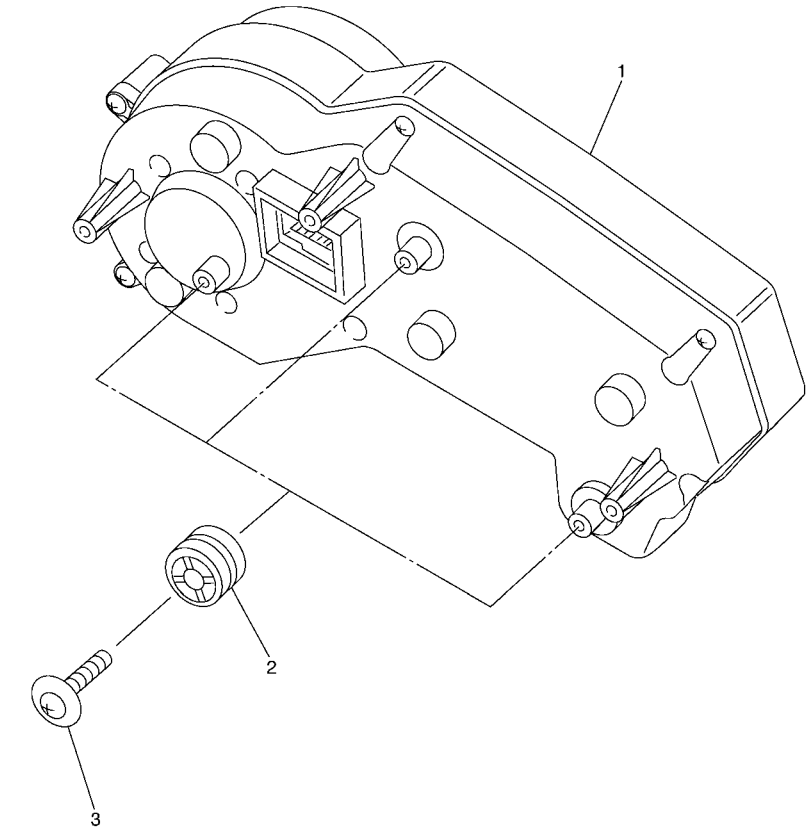

3C31300-E420

FIG. 42 METER

REF. NO.	PART NO.	DESCRIPTION	3C3L	3C3M	3C3N			REMARKS
1	2D1–83500–60	SPEEDOMETER ASSY (MPH)	1	1				
	2D1–83500–70	SPEEDOMETER ASSY (KM/H)			1			
2	3C3–83513–00	DAMPER	3	3	3			
3	90164–05014	SCREW, TAPPING	3	3	3			

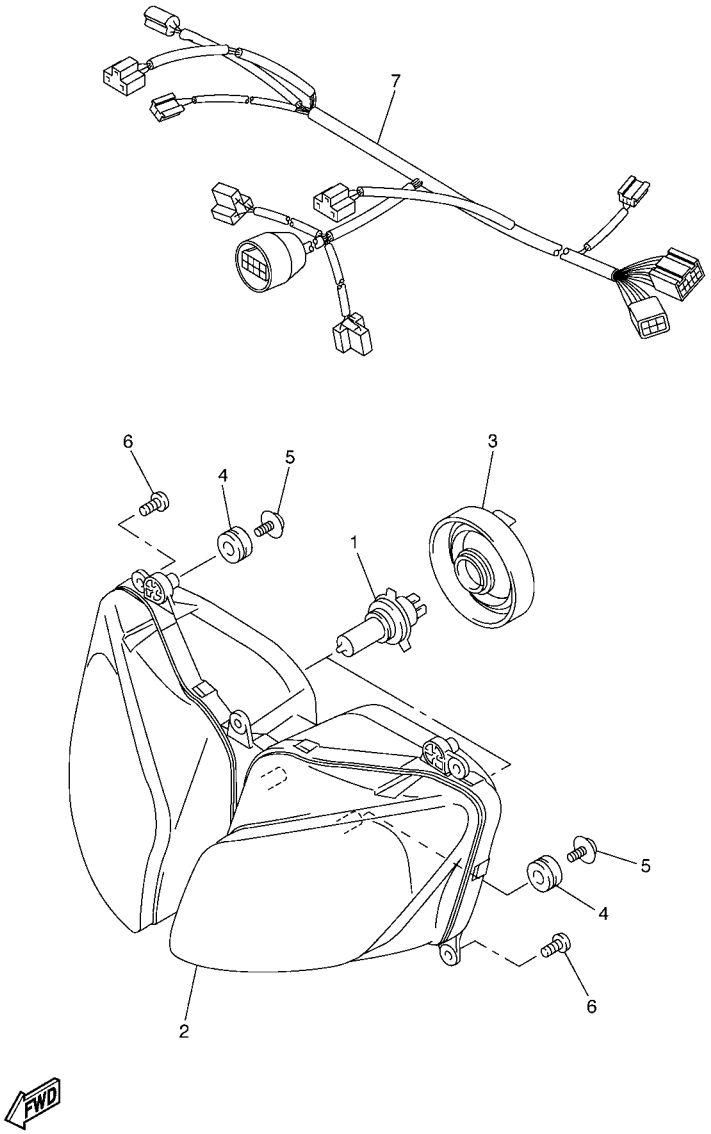

3C34100-E430

FIG. 43 HEADLIGHT

REF. NO.	PART NO.	DESCRIPTION	3C3L	3C3M	3C3N			REMARKS
1	8V0–84314–00	BULB (12V-60/55W)	2	2	2			
2	3C3–84310–20	HEADLIGHT UNIT ASSY	1	1	1			
3	5LV–84397–00	COVER, SOCKET	2	2	2			
4	90480–14229	GROMMET	4	4	4			
5	90164–05014	SCREW, TAPPING	4	4	4			
6	97707–50016	SCREW, TRUSS HEAD TAPPING	5	5	5			
7	3C3–84359–10	CORD, HEADLIGHT	1	1	1			

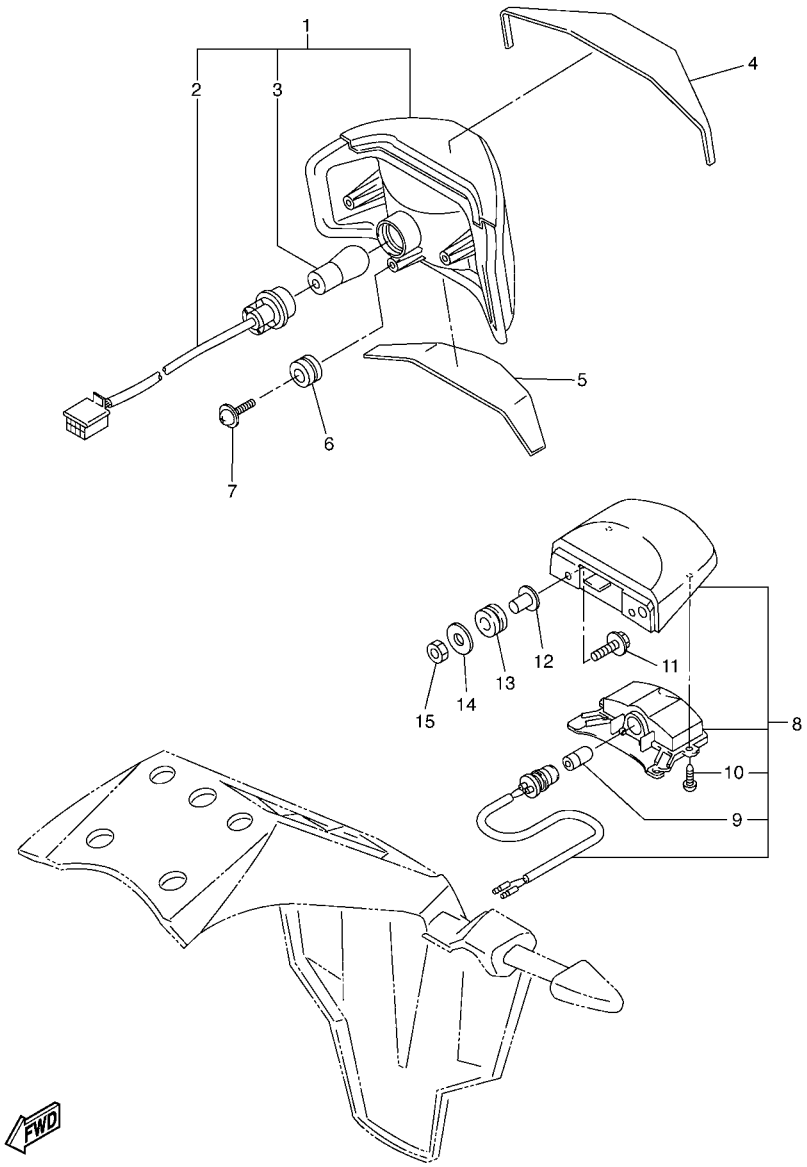

FIG. 44 TAILLIGHT

REF. NO.	PART NO.	DESCRIPTION	3C3L	3C3M	3C3N			REMARKS
1	2D1–84710–00	TAILLIGHT UNIT ASSY	1	1	1			
2	2D1–84735–00	.CORD ASSY	1	1	1			
3	1A2–84714–41	.BULB (12V-21/5W)	1	1	1			
4	3C3–84736–00	DAMPER, TAIL 1	1	1	1			
5	2D1–84737–00	DAMPER, TAIL 2	1	1	1			
6	90480–18276	GROMMET	3	3	3			
7	90164–05001	SCREW, TAPPING	3	3	3			
8	2D1–84745–00	LICENCE LIGHT UNIT ASSY	1	1	1			
9	4HC–84744–00	.BULB (12V-5W)	1	1	1			
10	97706–04012	.SCREW, TAPPING	2	2	2			
11	90159–05035	SCREW, WITH WASHER	2	2	2			
12	90387–05042	COLLAR	2	2	2			
13	90480–11009	GROMMET	2	2	2			
14	92902–05200	WASHER	2	2	2			
15	95602–05100	NUT, U	2	2	2			

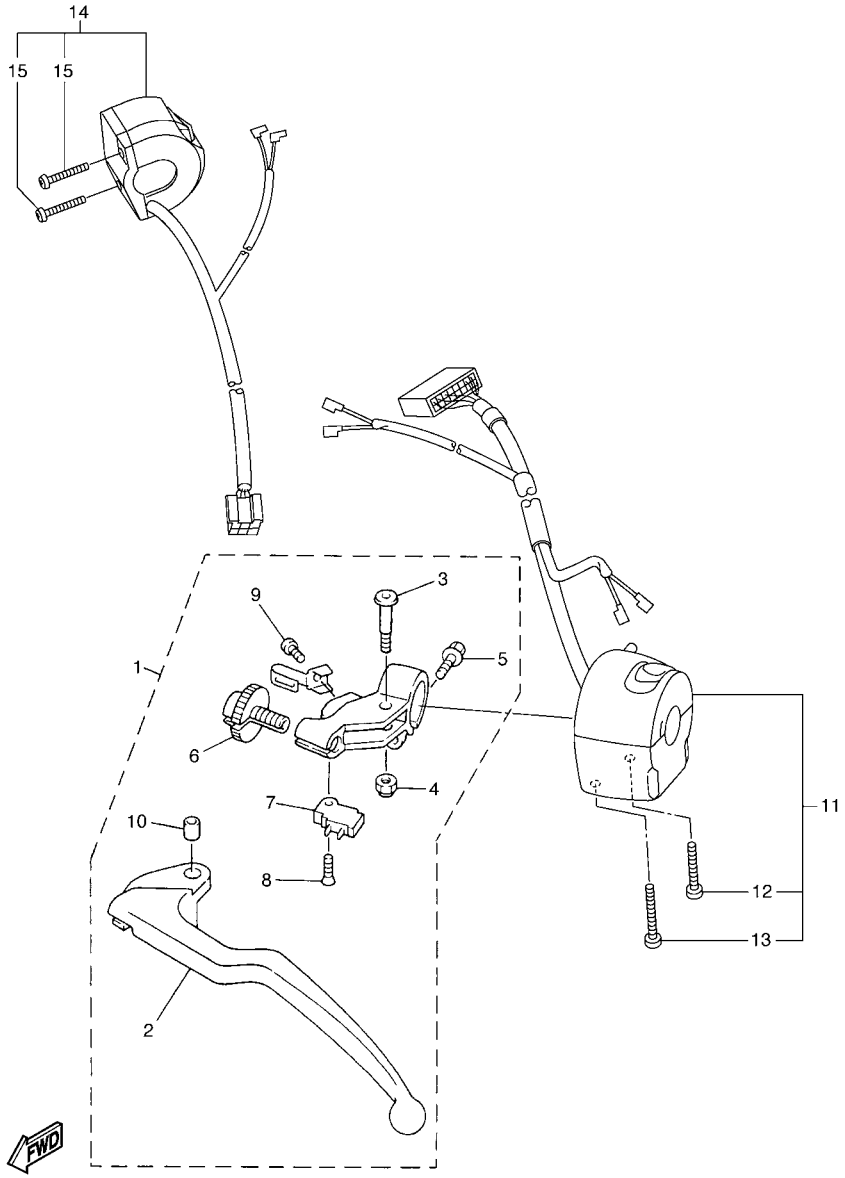

3C34100-E450

FIG. 45 HANDLE SWITCH & LEVER

REF. NO.	PART NO.	DESCRIPTION	3C3L	3C3M	3C3N			REMARKS
1	4XV–82910–15	LEVER HOLDER ASSY (LEFT)	1	1	1			
2	4XV–83912–11	.LEVER 1	1	1	1			
3	2C0–83945–00	.BOLT, LEVER	1	1	1			
4	95607–06200	.NUT, SELF U-FLANGE	1	1	1			
5	95027–06020	.BOLT, FLANGE	1	1	1			
6	5LV–83951–00	.BOLT, CABLE ADJUSTING	1	1	1			
7	4XV–82917–01	.SWITCH	1	1	1			
8	98707–03016	.SCREW, FLAT HEAD	1	1	1			
9	98507–04010	.SCREW, PAN HEAD	1	1	1			
10	5JJ–83913–00	.COLLAR, LEVER 1	1	1	1			
11	3C3–83972–00	SWITCH, HANDLE 4	1	1	1			
12	98507–05030	.SCREW, PAN HEAD	1	1	1			
13	98507–05045	.SCREW, PAN HEAD	1	1	1			
14	2D1–83975–00	SWITCH, HANDLE 2	1	1	1			
15	98507–05022	.SCREW, PAN HEAD	2	2	2			

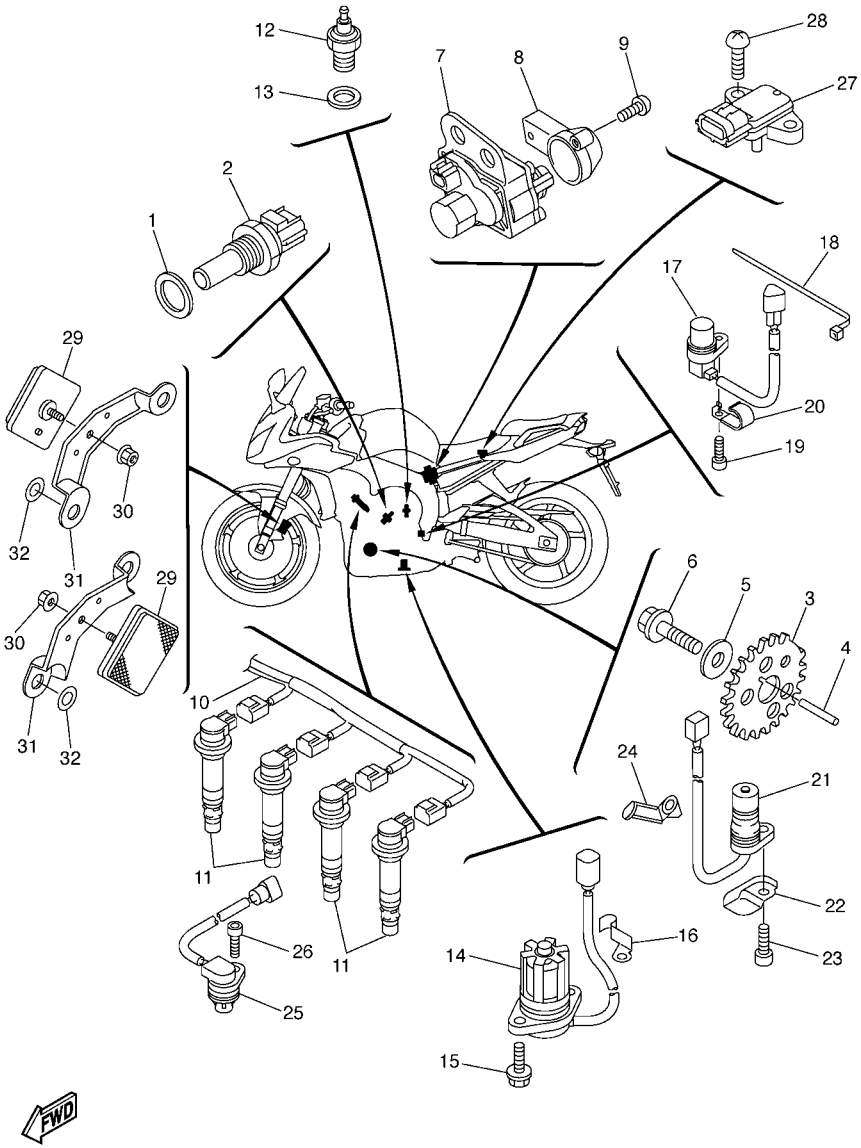

3C3D100-F460

FIG. 46 ELECTRICAL 1

REF. NO.	PART NO.	DESCRIPTION	3C3L	3C3M	3C3N			REMARKS
1	90201–12790	WASHER, PLATE	1	1	1			
2	8CC–85790–01	THERMOSENSOR ASSY	1	1	1			
3	2D1–81673–00	ROTOR	1	1	1			
4	90282–03001	KEY, STRAIGHT	1	1	1			
5	90201–10039	WASHER, PLATE	1	1	1			
6	90105–10290	BOLT, FLANGE	1	1	1			
7	2D1–85820–00	SERVO MOTOR ASSY	1	1	1			
8	5VY–85829–00	COVER, SERVO MOTOR	1	1	1			
9	97702–50514	SCREW, TAPPING	2	2	2			
10	2D1–82309–00	WIRE, SUB LEAD	1	1	1			
11	5VY–82310–00	IGNITION COIL ASSY	4	4	4			
12	3GB–82540–01	NEUTRAL SWITCH ASSY	1	1	1			
13	90430–10148	GASKET	1	1	1			
14	5VY–85720–00	OIL LEVEL GAUGE ASSY	1	1	1			
15	95022–06016	BOLT, FLANGE	2	2	2			
16	90465–08053	CLAMP	1	1	1			
17	4XV–83755–03	SENSOR, SPEED	1	1	1			
18	90464–51001	CLAMP	1	1	1			
19	90110–06161	BOLT, HEXAGON SOCKET HEAD	1	1	1			
20	90462–08057	CLAMP	1	1	1			
21	5VY–81670–01	PICK-UP ASSY	1	1	1			
22	5VY–15589–00	PLATE, CLUTCH COVER	1	1	1			
23	90110–06161	BOLT, HEXAGON SOCKET HEAD	1	1	1			
24	90465–08054	CLAMP	1	1	1			
25	5VY–85896–00	SENSOR, CAM POSITION	1	1	1			
26	90110–06175	BOLT, HEXAGON SOCKET HEAD	1	1	1			
27	2C0–82380–00	SENSOR, PRESSURE	1	1	1			

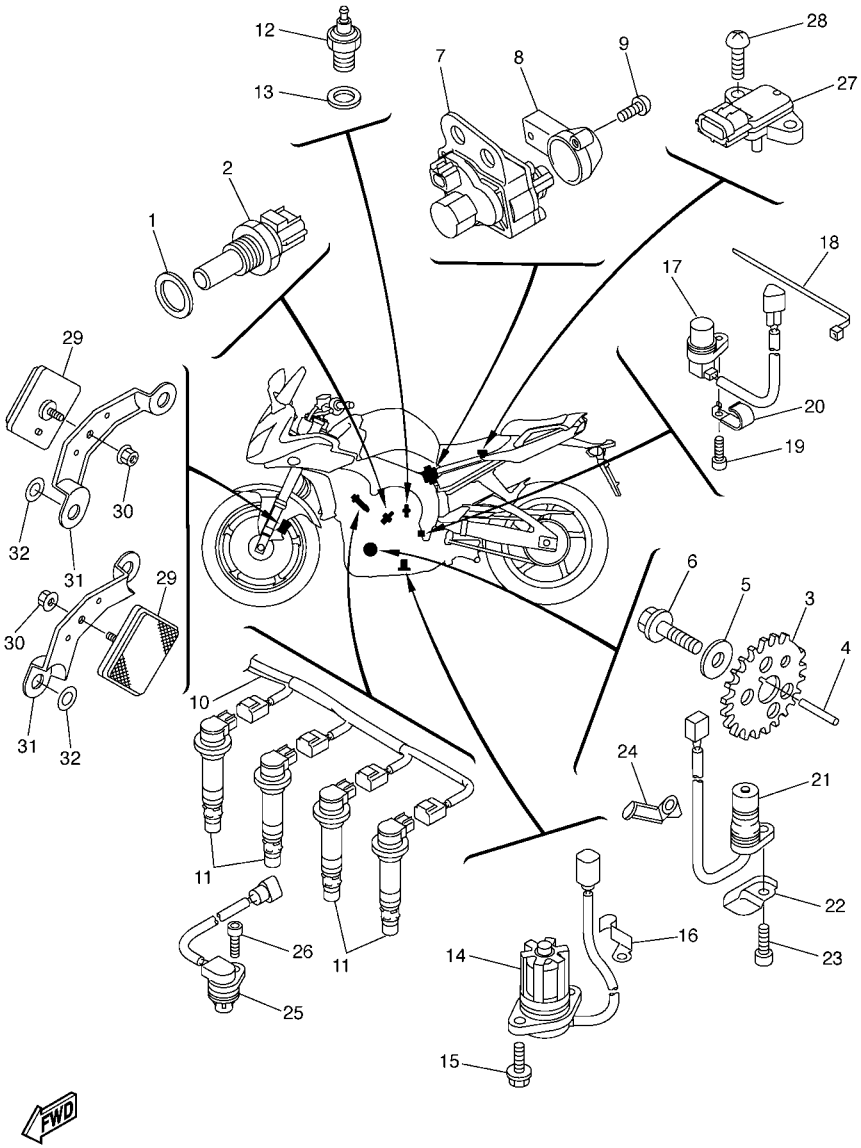

3C3D100-F460

FIG. 46 ELECTRICAL 1

REF. NO.	PART NO.	DESCRIPTION	3C3L	3C3M	3C3N			REMARKS
28	97702–60520	SCREW, TAPPING	1	1	1			
29	20G–85110–00	REFLECTOR ASSY	2	2	2			
30	95707–05500	NUT, FLANGE	2	2	2			
31	4XV–85112–00	BRACKET, REFLECTOR 1	2	2	2			
32	90201–08759	WASHER, PLATE	4	4	4			

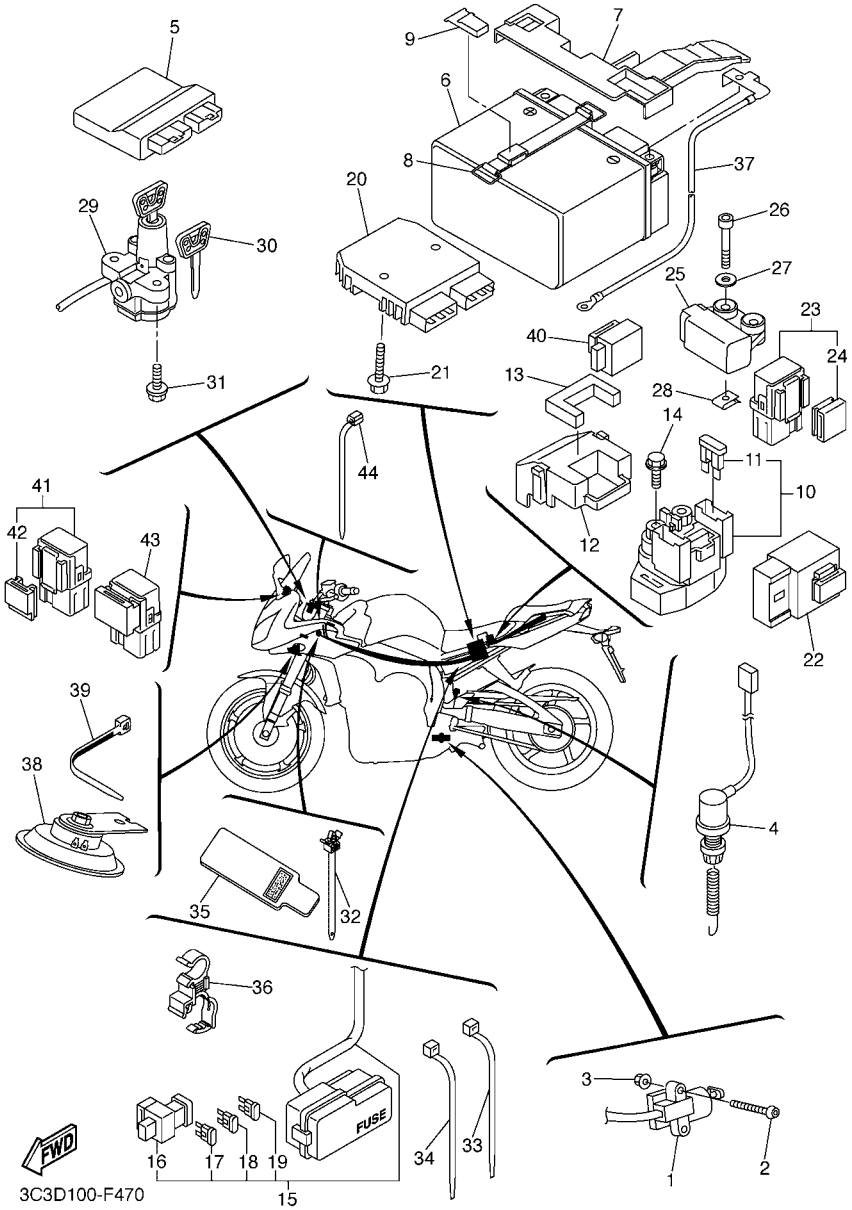

FIG. 47 ELECTRICAL 2

REF. NO.	PART NO.	DESCRIPTION	3C3L	3C3M	3C3N			REMARKS
1	5VS–82566–61	SWITCH, SIDE STAND	1	1	1			
2	92012–05030	BOLT, BUTTON HEAD	2	2	2			
3	95602–05200	NUT, SELF-LOCKING	2	2	2			
4	2D1–82530–00	STOP SWITCH ASSY	1	1	1			
5	3C3–8591A–50	ENGINE CONTROL UNIT ASSY	1	1	1			
6	2D1–82100–00	BATTERY ASSY(GS YUASA YTZ14S)	1	1	1			
7	2D1–82129–00	COVER, BATTERY	1	1	1			
8	2D1–82131–00	BAND, BATTERY	1	1	1			
9	5YU–2162A–00	HOOK	1	1	1			
10	2C0–81940–00	STARTER RELAY ASSY	1	1	1			
11	36Y–82151–00	.FUSE (15A-BL)	2	2	2			
12	5SL–82119–10	COVER, LEAD WIRE	1	1	1			
13	2D1–82176–00	DAMPER	1	1	1			
14	95027–06008	BOLT, FLANGE	2	2	2			
15	3C3–82590–10	WIRE HARNESS ASSY	1	1	1			
16	5JW–82151–10	.FUSE (50A)	1	1	1			
17	5JJ–82151–70	.FUSE (25A-BL)	2	2	2			
18	5JJ–82151–10	.FUSE (15A-BL)	2	2	2			
19	5JJ–82151–30	.FUSE (10A-BL)	6	6	6			
20	1D7–81960–00	RECTIFIER & REGULATOR ASSY	1	1	1			
21	95822–06025	BOLT, FLANGE	2	2	2			
22	5VK–81950–40	RELAY ASSY	1	1	1			
23	5JJ–81950–20	RELAY ASSY	1	1	1			
24	5JJ–81952–00	.HOLDER, RELAY	1	1	1			
25	5PS–82576–01	LEAN ANGLE SENSOR	1	1	1			
26	91317–04025	BOLT	2	2	2			
27	90201–047A2	WASHER, PLATE	2	2	2			

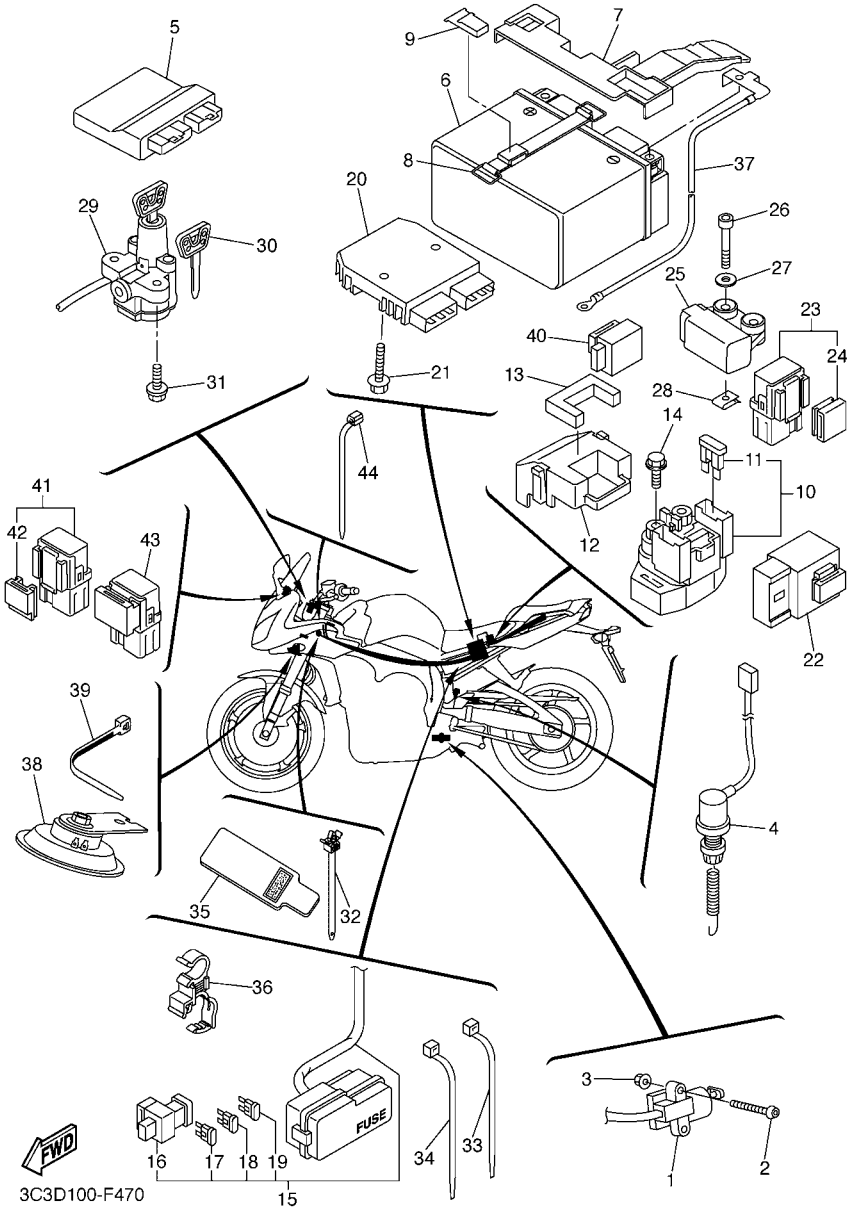

FIG. 47 ELECTRICAL 2

REF. NO.	PART NO.	DESCRIPTION	3C3L	3C3M	3C3N			REMARKS
28	90183–04039	NUT, SPRING	2	2	2			
29	3C3–82501–10	MAIN SWITCH STEERING LOCK	1	1	1			
30	4BH–82511–09	BLANK KEY	1	1	1			AP
31	90109–080G5	BOLT	2	2	2			
32	90464–12036	CLAMP	2	2	2			
33	1UA–82591–00	BAND	2	2	2			
34	90464–13073	CLAMP	3	3	3			
35	2D1–82589–00	PROTECTER, WIRE HARNESS	1	1	1			
36	90464–12012	CLAMP	1	1	1			
37	2D1–82116–00	WIRE, MINUS LEAD	1	1	1			
38	2D1–83371–00	HORN	1	1	1			
39	3MA–82591–00	BAND	1	1	1			
40	4MY–83350–01	FLASHER RELAY ASSY	1	1	1			
41	5EA–81950–20	RELAY ASSY	1	1	1			
42	5EA–81952–00	.HOLDER, RELAY	1	1	1			
43	5DM–81950–00	RELAY ASSY	1	1	1			
44	90464–13077	CLAMP	1	1	1			

NUMERICAL INDEX

PART NO.	GRID NO.
2D1–11026–00	B – 3
5VY–11101–20	B – 2
5VY–1111G–00	B – 2
5VY–11133–10	B – 2
5VY–11134–10	B – 2
5VY–11165–00	C – 8
2D1–11181–00	B – 2
5VY–11191–02	B – 2
5VY–11193–10	B – 2
214–11198–01	B – 14
5VY–11311–10	B – 4
2D1–1133E–01	C – 5
2D1–1133F–11	C – 5
5VY–11351–00	B – 4
2D1–11411–00	B – 5
5VY–11416–00	B – 5
5VY–11416–10	B – 5
5VY–11416–20	B – 5
5VY–11416–30	B – 5
5VY–11416–A0	B – 5
5VY–11445–00	C – 9
5VY–11478–00	C – 9
2D1–11537–00	C – 9
5VY–11549–00	B – 5
5VY–11603–01	B – 5
5VY–11631–10	B – 5
5VY–11633–00	B – 5
4C8–11650–00	B – 5
5VY–11654–01	B – 5
2D1–11656–00	B – 5
2D1–11656–10	B – 5
2D1–11656–20	B – 5
2D1–11656–30	B – 5
2D1–12111–00	B – 6
2D1–12112–00	B – 6
2D1–12113–00	B – 6
2D1–12114–00	B – 6
5NL–12116–00	B – 6
1HX–12117–00	B – 6
1WG–12117–00	B – 6
1HX–12118–00	B – 6
1WG–12118–00	B – 6
4SV–12119–00	B – 6
4TV–12119–00	B – 6
5VY–12121–00	B – 6
3GM–12126–00	B – 6
3FV–12153–09	B – 7
3LN–12153–09	B – 7

PART NO.	GRID NO.
3FV–12153–20	B – 7
3LN–12153–20	B – 7
3FV–12153–30	B – 7
3LN–12153–30	B – 7
1HX–12168–00	B – 6
1HX–12168–20	B – 6
1HX–12168–40	B – 6
1HX–12168–60	B – 6
1HX–12168–80	B – 6
1HX–12168–A0	B – 6
1HX–12168–F0	B – 6
1HX–12168–H1	B – 6
1HX–12168–K1	B – 6
1HX–12168–M1	B – 6
1HX–12168–R1	B – 6
1HX–12168–U1	B – 6
1HX–12168–W1	B – 6
1HX–12168–Y1	B – 6
1HX–12169–11	B – 7
1HX–12169–31	B – 7
1HX–12169–50	B – 7
1HX–12169–70	B – 7
1HX–12169–90	B – 7
1HX–12169–E0	B – 7
1HX–12169–G0	B – 7
1HX–12169–J0	B – 7
1HX–12169–L0	B – 7
1HX–12169–N0	B – 7
1HX–12169–T0	B – 7
2D1–12170–00	B – 8
5VY–12176–00	B – 8
2D1–12180–00	B – 8
5VY–12210–20	B – 8
2D1–12213–00	B – 8
5BE–12241–00	B – 2
5VY–12251–00	B – 8
5VY–12252–01	B – 8
5VY–12277–00	D – 12
2D1–12405–00	B – 11
2D1–12405–10	B – 11
3C3–1240J–00–P1	B – 12
3C3–1240K–00–P1	B – 12
2D1–12410–00	B – 11
5LP–12411–00	B – 11
5VY–12420–10	B – 9
5VY–12422–00	B – 9
11H–12438–10	B – 9
4XV–12439–00	B – 9

PART NO.	GRID NO.
5VY–1243A–00	B – 11
2D1–1243E–00	B – 11
5VY–1243F–00	B – 11
5VY–12443–10	C – 8
2D1–1244G–00	B – 11
5VY–12450–11	B – 9
5VY–12456–10	B – 9
2D1–12461–00	B – 11
22W–12462–00	B – 11
2D1–12464–00	B – 12
2D1–12467–00	B – 12
5VY–12469–00	B – 9
5GV–1246A–00	B – 11
5VY–12481–10	B – 10
2D1–12484–00	B – 10
4XV–12485–00	B – 9
5VY–12485–10	B – 11
1AA–12535–00	B – 11
2D1–12551–00	B – 12
5VY–12576–00	B – 9
2D1–12578–00	B – 11
5VY–12579–00	B – 11
5VY–12588–00	B – 10
2D1–12589–00	B – 12
2D1–12637–00	B – 9
2D1–12675–00	B – 11
5EB–12822–00	B – 14
5VY–13117–10	B – 13
2D1–13160–00	C – 2
5VY–13161–00	B – 14
5VY–1316E–00	B – 13
5VY–13310–10	B – 9
5VY–13336–00	B – 9
5VY–13354–00	C – 11
5VY–13355–00	B – 9
5VY–13410–00	B – 13
4C8–13414–00	B – 14
5VY–13416–00	B – 13
2D1–13417–10	B – 14
5VY–13418–10	C – 6
5GH–13440–20	B – 14
5VY–13470–00	B – 14
5JW–13473–00	B – 14
5EB–13475–00	B – 14
5VY–13490–00	B – 14
5VY–13543–00	C – 3
8FP–13556–00	C – 3
5VY–13595–00	B – 15

PART NO.	GRID NO.
5VY–13596–00	B – 15
5VY–13597–00	B – 15
5VY–13598–00	B – 15
3C3–13750–10	C – 2
2D1–13750–20	C – 2
5VY–13761–00	C – 3
5VY–13898–00	B – 13
2D1–13907–01	D – 14
2D1–13971–00	C – 3
5PW–14103–00	C – 3
5JW–14104–00	C – 3
4KM–14137–00	C – 2
5PS–14147–00	C – 3
5VY–14171–00	C – 2
5VY–14204–00	C – 2
8CC–14216–10	C – 3
3XV–14251–00	C – 2
5PW–14251–00	C – 2
5PW–14349–00	C – 2
5SL–14349–00	C – 3
5FL–14349–10	C – 2
5JW–14396–00	C – 2
2D1–14409–00	B – 15
2D1–1440B–00	B – 15
2D1–14411–00	B – 15
2D1–14413–00	C – 3
2D1–14421–00	B – 15
3C3–1443J–01	E – 2
2D1–14451–00	B – 15
2D1–14452–00	B – 15
5VY–14457–00	B – 15
2D1–14462–00	B – 15
5VY–14465–01	C – 3
5VY–14466–01	C – 3
2D1–14498–00	B – 15
5JW–14589–00	C – 2
2D1–14602–10	C – 5
4FM–14613–00	C – 5
2D1–14703–00	C – 5
2D1–14718–10	C – 5
5JW–14723–00	C – 4
2D1–14737–00	C – 5
5VY–14755–00	C – 5
2D1–14799–00	C – 5
2D1–14826–00	C – 5
5VY–1482K–00	B – 2
2D1–14840–00	C – 4
5VY–14881–00	C – 4

PART NO.	GRID NO.
5VY–14882–00	C – 4
5VY–14883–00	C – 4
5SL–14890–10	B – 2
5VY–14899–00	B – 2
5VY–14905–00	C – 3
5DM–14936–00	C – 2
22U–14952–00	C – 2
5PS–14987–00	C – 2
4C8–15100–00	C – 6
4B1–15113–00	C – 8
5EB–15155–00	C – 6
5VY–15163–00	C – 12
5VY–15164–00	C – 7
36Y–15189–00	C – 8
4H7–15189–00	C – 8
5PX–15189–00	C – 7
4C8–15191–00	F – 3
5VY–15316–00	C – 6
5PW–15361–00	C – 6
3F9–15362–00	C – 7
2D1–15393–00	B – 15
5VY–15411–00	C – 7
2D1–15413–00	C – 8
2D1–15416–00	C – 7
2D1–15418–00	C – 7
2D1–15421–00	C – 7
5VY–15431–00	C – 8
2D1–15441–00	C – 8
2D1–15451–10	C – 7
4C8–15456–00	C – 8
4C8–15461–00	C – 7
4C8–15462–00	C – 8
5VY–15515–00	C – 9
5VY–15517–00	C – 9
5VY–15521–00	C – 9
5VY–15542–00	C – 7
5VY–15570–00	C – 9
5VY–15586–00	C – 9
5VY–15589–00	F – 10
5VY–16150–00	C – 10
5VY–16154–00	C – 10
5VY–16155–00	C – 9
5VY–16164–00	C – 11
5VY–16181–00	C – 11
5VY–16321–00	C – 10
5VY–16325–00	C – 10
5VY–16330–00	C – 10
5VY–16331–00	C – 10

PART NO.	GRID NO.
5VY–16340–00	C – 10
132–16346–00	C – 15
5VY–16351–00	C – 10
4XV–16356–01	C – 10
2D1–16370–00	C – 10
2D1–16382–00	C – 10
5VY–16383–00	C – 10
5VY–16384–00	C – 10
4X7–16385–00	C – 10
2D1–17121–10	C – 12
2D1–17131–00	C – 12
2D1–17151–00	C – 12
2D1–17161–00	C – 12
5VY–17211–00	C – 13
2D1–17221–00	C – 12
5VY–17231–00	C – 13
5VY–17241–00	C – 12
2D1–17251–01	C – 13
2D1–17261–00	C – 12
5VY–17402–00	C – 12
5VY–17411–00	C – 12
5VY–17442–00	C – 12
5VY–17446–00	C – 12
3CV–17460–00	C – 13
2D1–18101–00	C – 15
2D1–18110–00	C – 15
2D1–18112–00	C – 15
5EB–18113–00	C – 15
	E – 14
2D1–18115–00	C – 15
5VX–18116–00	C – 15
5VY–18127–10	C – 15
5VY–18140–00	C – 15
5VY–18144–00	C – 15
5VX–18154–00	C – 15
2D1–18511–00	C – 14
2D1–18512–00	C – 14
5VY–18513–01	C – 14
5VY–18531–00	C – 14
5VY–18535–00	C – 14
5VY–18536–00	C – 14
5VY–18540–00	C – 14
136–18542–00	C – 14
5VY–18562–00	C – 14
2D1–21110–01–P0	D – 2
2D1–21110–21–P0	D – 2
2D1–2117G–00	D – 2
4XV–2117K–00	E – 3

NUMERICAL INDEX

PART NO.	GRID NO.
2D1–2117N–00	D – 2
5GK–2118K–00	D – 15
5GK–2118K–10	D – 15
2D1–21190–00–P0	D – 3
3C3–21261–00	D – 6
2D1–21268–10	D – 3
2D1–21287–01	D – 2
3C3–21341–01	E – 3
2D1–21345–00	D – 2
3YX–21376–00	D – 2
4XV–21376–00	D – 4
2D1–2139U–00	B – 12
2D1–2144G–00	E – 12
4C8–21495–00	D – 2
5PW–21511–00–P3	D – 4
5PW–21511–00–PE	D – 4
3C3–21541–00	D – 4
2D1–21575–00	D – 3
3C3–21611–00	D – 6
3C3–21617–00	D – 5
2D1–21629–10	D – 5
5YU–2162A–00	F – 12
5YU–21639–00	D – 2
3C3–2163A–00	D – 5
2D1–2163G–70	E – 15
2D1–2163G–80	E – 15
2D1–21646–00	D – 4
2D1–21650–00	D – 9
5VY–21668–00	D – 9
5VY–21668–10	D – 9
5SL–21686–00	D – 3
2D1–21688–00	D – 5
5VY–21688–00	D – 6
5VY–21689–00	D – 6
2D1–216A2–00	D – 4
2D1–216A3–00	D – 4
2D1–21711–00	D – 7
2D1–21719–00	D – 7
3C3–2171A–00–P2	D – 15
3C3–2171A–00–P4	D – 15
2D1–21721–00	D – 7
5PW–2174X–00	D – 5
2D1–2174Y–00	D – 2
3C3–2176P–20	D – 6
3C3–2179W–20	D – 6
26H–21828–00	D – 7
2D1–21871–00	D – 7
5VY–21875–00	D – 7

PART NO.	GRID NO.
3C3–2193A–00	D – 5
2D1–2197E–00	D – 2
2D1–22110–11	D – 8
2D1–22117–00	D – 8
5JJ–22128–00	D – 8
2D1–22141–00	D – 9
2D1–22151–00	D – 8
2D1–2217A–00	D – 8
2D1–2217M–00	D – 8
2D1–22184–00	D – 8
2D1–22210–11	D – 10
2D1–22210–21	D – 10
5SL–22311–00	D – 8
3C3–22825–00	D – 5
3C3–22826–00	D – 5
2D1–23102–11	D – 12
2D1–23103–11	D – 12
2D1–23110–00	D – 12
2D1–23111–10	D – 12
5VY–23118–00	D – 12
2D1–23120–00	D – 12
4KM–23123–01	D – 13
2D1–23136–10	D – 12
2D1–23141–00	D – 12
4PU–23144–00	D – 12
4PU–23145–01	D – 12
4V4–23146–L0	D – 12
3XJ–23147–L0	D – 12
4V4–23153–L0	D – 12
509–23158–L0	D – 12
2D1–23170–01	D – 12
2D1–23170–11	D – 12
3D8–23181–00	D – 12
3C3–23318–00	D – 11
3C3–23319–00	D – 11
2D1–23340–00	D – 13
3LC–23357–00	D – 12
3C3–23378–00	E – 10
2D1–23405–10	D – 11
4XV–23415–01	D – 11
4XV–23418–00	D – 11
4XV–2341B–00	D – 11
4PX–23426–00	D – 3
3VD–23434–00	D – 11
2D1–23441–00	D – 11
2D1–23442–00	D – 11
5YU–23445–00	D – 11
3FV–23462–00	D – 11

PART NO.	GRID NO.
5JW–23844–00	E – 15
2D1–23857–00	E – 10
2D1–24106–00	D – 15
2D1–24108–00	D – 15
2D1–24129–00	D – 3
2D1–2412G–00	D – 14
2D1–24139–00	D – 3
5SL–2413B–00	D – 15
2D1–2414H–00	D – 15
2D1–2414K–00	D – 15
2D1–2414N–00	D – 15
2D1–2414P–00	D – 15
2D1–2414R–00	D – 15
3C3–24170–00	D – 15
5RB–24180–00	E – 2
2D1–24181–00	D – 15
3MA–24181–00	C – 5
5VX–24181–00	D – 14
5VY–24181–00	D – 14
2D1–24182–00	D – 4
2D1–24183–00	D – 2
2D1–24184–00	D – 2
2D1–24185–00	D – 2
2D1–24192–00	D – 14
3C3–24216–00	D – 15
3C3–24313–00	E – 2
3C3–24314–00	E – 2
2D1–24315–00	D – 14
2D1–24316–00	D – 14
2D1–24317–00	D – 14
3C3–24317–00	D – 14
68V–24376–00	C – 2
5JW–24486–00	D – 14
2D1–24491–00	D – 14
5JJ–24602–00	D – 14
2D1–24665–00	E – 3
2D1–24710–00	E – 3
2D1–24711–00	E – 3
3C3–2471K–00–P2	D – 4
3C3–2471K–00–P5	D – 4
3C3–24723–00	D – 4
3C3–24724–00	D – 4
4HM–24728–00	E – 3
3C3–2472K–00–P2	D – 5
3C3–2472K–00–P5	D – 4
3C3–24737–00	D – 4
22W–24741–00	D – 5
3C3–24741–00	E – 3

PART NO.	GRID NO.
3C3–24747–00	D – 4
3C3–24750–00	E – 3
3C3–24751–00	E – 3
2D1–2476U–00	E – 3
2D1–2476V–00	E – 3
3C3–24773–00–P2	D – 4
3C3–24773–00–P5	D – 4
4BP–24780–00	E – 3
2D1–24780–02	E – 3
2D1–24785–00	E – 3
2D1–2478E–00	E – 3
4BP–24792–00	E – 3
3TB–24877–A0	D – 6
3TB–24877–B0	D – 6
4XV–25117–00	E – 4
5VY–25168–00–8L	E – 4
4XV–25181–10	E – 4
5PW–25317–00	E – 6
5VY–25338–00–8L	E – 6
5VX–25364–00	E – 6
2D1–25366–00	E – 6
2D1–25377–00	E – 6
2D1–25381–00	E – 6
2D1–25383–00	E – 6
5VY–25388–00	E – 6
5VY–25389–00	E – 6
5MT–25398–00	E – 4
	E – 6
5MT–25398–10	E – 4
	E – 6
5MT–25398–20	E – 4
	E – 6
2D1–25445–20	E – 6
2D1–2580T–00	E – 5
2D1–2580U–00	E – 5
2D1–2580W–00	E – 8
5D0–2581T–00	E – 5
5SL–25827–00	E – 8
5SL–25827–10	E – 8
5SL–25828–00	E – 8
2D1–2582A–00	E – 14
2D1–2582W–00	E – 8
5SL–25838–00	E – 8
2D1–2583V–00	E – 14
5SL–25852–00	E – 14
5VS–25852–00	E – 10
5SL–25854–00	E – 14
5VS–25854–00	E – 10

PART NO.	GRID NO.
5SL–25855–00	E – 14
5VS–25855–00	E – 10
4BP–2585F–00	E – 14
5VS–25867–00	E – 10
3C3–25872–00	E – 10
2D1–25874–00	E – 14
2D1–25875–00	E – 10
2D1–25876–00	E – 10
2D1–25886–00	E – 14
2D1–25887–00	D – 8
2D1–25894–00	E – 14
2D1–25895–00	E – 14
5VS–2589F–00	E – 10
5VS–2589H–00	E – 10
5SL–25914–00	E – 8
5DH–25916–00	E – 8
3JD–25917–00	E – 8
5SL–25917–00	E – 8
4SV–25919–00	E – 5
5SL–25919–00	E – 8
5VX–25921–50	E – 8
4SV–25924–00	E – 5
8CR–25924–00	E – 8
3GM–25925–00	E – 5
5SL–25926–00	E – 8
2D1–26111–01	E – 9
4YR–26240–02	E – 9
4YR–26241–02	E – 9
51J–26246–01	E – 9
3C3–26280–00	F – 2
3LN–26281–01	E – 9
4BP–26282–00	E – 9
3C3–26290–00	F – 2
3C3–26298–00	F – 2
2D1–26302–00	E – 9
5VS–26332–00	E – 10
3C3–26335–00	E – 9
3C3–27111–00	E – 13
278–27114–00	E – 3
371–27114–00	E – 13
5VX–27114–00	E – 11
3C3–27151–01	E – 13
3C3–27152–00	E – 13
2D1–27211–00	E – 14
4BP–27222–01	E – 14
2D1–27311–00	E – 11
2D1–27321–00	E – 11
2D1–27410–00	E – 11

PART NO.	GRID NO.
4BP–27413–00	E – 11
1HX–27415–00	E – 11
2D1–2741L–00	E – 12
2D1–27420–00	E – 11
1NL–27424–00	E – 11
36Y–27424–01	E – 13
2D1–27425–02	D – 3
2D1–2742L–00	E – 12
3VR–27431–01	E – 12
5VX–27437–00	E – 12
3VR–27441–01	E – 12
2D1–27442–00	E – 11
2D1–27443–00	E – 12
2D1–27486–00	E – 11
2D1–27487–00	E – 12
3C3–274A3–00	E – 13
2D1–28100–00	D – 6
3P6–28307–00	E – 15
2D1–28345–01	D – 15
3C3–2834E–00	F – 2
4XV–2834E–00	D – 15
	E – 15
3C3–2834F–00	F – 2
3C3–28356–00	E – 15
3C3–2835U–00	F – 2
3C3–2835V–00	F – 2
5JW–2835Y–00	F – 2
5JW–2835Y–10	F – 2
3C3–2836A–00	F – 2
4KN–2836B–00	D – 6
3C3–2836E–00	F – 2
3C3–2836K–00	E – 15
3C3–2836L–00	E – 15
3C3–28371–01	E – 15
3C3–28372–00	E – 15
3C3–2837J–00	E – 15
3C3–28381–10	E – 15
3JJ–28446–A1	D – 6
3JJ–28446–B1	D – 6
2D1–81410–01	F – 3
5VY–81450–00	F – 3
5VY–81670–01	F – 10
2D1–81673–00	F – 10
3AJ–81801–00	F – 4
2D1–81815–00	F – 4
2D1–81826–00	F – 4
4XV–8182A–00	F – 4
11H–81844–00	F – 4

PART NO.	GRID NO.
1FK–81847–00	F – 4
2D1–81890–00	F – 4
2C0–81940–00	F – 12
5DM–81950–00	F – 13
5EA–81950–20	F – 13
5JJ–81950–20	F – 12
5VK–81950–40	F – 12
5EA–81952–00	F – 13
5JJ–81952–00	F – 12
1D7–81960–00	F – 12
2D1–82100–00	F – 12
2D1–82116–00	F – 13
5SL–82119–10	F – 12
2D1–82122–10	D – 4
2D1–82129–00	F – 12
2D1–8212B–01	D – 4
18G–82131–00	E – 3
2D1–82131–00	F – 12
36Y–82151–00	F – 12
5JJ–82151–10	F – 12
5JW–82151–10	F – 12
5JJ–82151–30	F – 12
5JJ–82151–70	F – 12
2D1–82176–00	F – 12
2D1–82309–00	F – 10
5VY–82310–00	F – 10
1C7–82380–00	C – 2
2C0–82380–00	F – 10
2D1–82386–00	C – 2
3C3–82501–10	F – 13
4BH–82511–09	F – 13
2D1–82530–00	F – 12
3GB–82540–01	F – 10
5VS–82566–61	F – 12
5PS–82576–01	F – 12
2D1–82589–00	F – 13
3C3–82590–10	F – 12
1UA–82591–00	D – 2
	F – 13
3MA–82591–00	E – 10
	F – 13
4XV–82910–15	F – 9
4XV–82917–01	F – 9
5PW–83310–10	F – 5
2D1–83318–00	F – 5
5PW–83320–10	F – 5
3C3–83330–30	F – 5
5GJ–83331–00	F – 5

PART NO.	GRID NO.
5PW–83331–00	F – 5
5PW–8333A–10	F – 5
3C3–83340–30	F – 5
5PW–8334A–10	F – 5
4MY–83350–01	F – 13
2D1–83371–00	F – 13
2D1–83500–60	F – 6
2D1–83500–70	F – 6
3C3–83513–00	F – 6
4XV–83755–03	F – 10
4XV–83912–11	F – 9
5JJ–83913–00	F – 9
5VS–83922–00	E – 10
2C0–83945–00	F – 9
5LV–83951–00	F – 9
3C3–83972–00	F – 9
2D1–83975–00	F – 9
4HM–83980–00	E – 10
3C3–84310–20	F – 7
8V0–84314–00	F – 7
3C3–84359–10	F – 7
5LV–84397–00	F – 7
2D1–84710–00	F – 8
1A2–84714–41	F – 8
2D1–84735–00	F – 8
3C3–84736–00	F – 8
2D1–84737–00	F – 8
4HC–84744–00	F – 8
2D1–84745–00	F – 8
5MT–84751–00	D – 6
20G–85110–00	F – 11
4XV–85112–00	F – 11
3Y6–85130–02	D – 5
5VY–85720–00	F – 10
8CC–85790–01	F – 10
2D1–85820–00	F – 10
5VY–85829–00	F – 10
5VY–85850–00	C – 2
2D1–85885–00	C – 2
5FL–85885–02	C – 2
8FP–85886–00	B – 15
5VY–85896–00	F – 10
3C3–8591A–50	F – 12
2D1–8592A–00	C – 5
2D1–W0041–00	E – 10
5VX–W0042–50	E – 14
5SL–W0045–00	E – 5
5VX–W0046–00	E – 8

PART NO.	GRID NO.
5SL–W0047–00	E – 8
3GM–W0047–10	E – 5
3MA–W0047–10	E – 5
1J3–W0048–00	E – 5
1UY–W0048–00	E – 8
4SV–W0057–00	E – 5
5SL–W0057–00	E – 8
4SV–W0057–10	E – 5
2TV–W2470–00	E – 3
3C3–W2587–00	E – 10
3C3–Y283G–W0–P5	E – 15
3C3–Y283G–X0–P2	E – 15
3C3–Y283W–10	E – 15
2D1–YK241–00–P4	D – 14
2D1–YK241–00–P8	D – 14
90101–08013	E – 7
90101–10004	E – 13
90101–10025	E – 11
90101–10033	E – 13
90105–06026	B – 2
90105–06050	D – 11
90105–06065	B – 9
90105–06066	B – 9
90105–06078	F – 3
90105–06556	E – 10
90105–07006	B – 8
90105–08101	C – 6
90105–08447	D – 5
90105–10030	D – 8
90105–10290	F – 10
90105–10323	D – 9
	D – 10
90105–10638	E – 5
90109–05005	B – 15
90109–06014	C – 8
90109–06015	B – 12
	C – 8
90109–06016	C – 7
90109–06031	C – 7
	D – 4
90109–06100	C – 6
90109–063F1	D – 4
90109–066F0	B – 2
90109–067E6	B – 12
90109–080G5	F – 13
90109–08170	C – 5
90109–08174	E – 11
90109–085G6	E – 13

PART NO.	GRID NO.
90109–10029	E – 13
90109–105G7	E – 13
90110–05028	D – 14
90110–05112	D – 14
90110–06102	D – 8
90110–06110	C – 5
90110–06112	C – 7
90110–06161	B – 10
	B – 13
	C – 6
	F – 10
90110–06164	C – 12
90110–06167	B – 9
90110–06168	B – 11
90110–06173	B – 13
90110–06174	B – 10
90110–06175	F – 10
90110–06176	C – 9
90110–06178	B – 2
90110–06182	B – 13
	B – 14
	C – 8
	C – 14
90110–06200	E – 15
90110–06233	D – 15
90110–06255	C – 7
90110–06276	C – 8
90110–06277	C – 8
90110–08068	C – 7
90110–08071	E – 11
90110–10005	D – 2
90110–10010	E – 11
90111–05015	E – 11
90111–05019	D – 15
90111–05024	D – 15
90111–06019	C – 15
	D – 3
90111–06031	B – 12
90111–06043	D – 4
90111–06060	C – 5
90111–06079	B – 12
90111–06080	B – 12
90111–10039	E – 11
90116–10023	C – 6
90116–10032	C – 6
90116–10485	E – 6
90119–05020	E – 14
90119–06228	D – 7

PART NO.	GRID NO.
90119–09003	C – 6
90149–06006	E – 3
90149–06026	D – 2
90149–06043	E – 5
90149–06064	C – 7
90149–06067	F – 3
90149–06165	D – 7
90149–06302	D – 9
90149–08009	E – 8
90150–04041	D – 6
90150–05024	E – 15
90151–06022	C – 8
90153–06002	B – 10
90154–05007	E – 15
90154–05035	D – 14
90157–05025	E – 11
90157–10001	D – 2
90159–05035	F – 8
90159–05056	D – 5
90159–06026	C – 10
90164–05001	F – 8
90164–05014	F – 6
	F – 7
90170–06228	C – 15
90170–08010	E – 14
90176–06014	B – 11
90176–10075	B – 2
90176–28083	D – 11
90179–05003	D – 15
90179–05523	E – 15
90179–08410	C – 5
90179–10006	B – 2
90179–10696	D – 2
90179–20007	C – 10
90179–22011	C – 13
90179–30691	D – 11
90183–04039	F – 13
90183–05076	E – 15
90183–051A0	D – 5
90183–06053	E – 15
90185–10009	E – 6
90185–10023	E – 11
90185–18167	D – 9
90185–24007	E – 6
90201–047A2	F – 12
90201–05017	C – 5
90201–05043	D – 5
90201–06034	B – 2

PART NO.	GRID NO.
90201–06079	B – 10
90201–06086	D – 14
90201–06088	D – 6
90201–06431	C – 7
90201–06589	C – 9
90201–08057	E – 7
90201–08066	E – 14
90201–08759	F – 11
90201–10020	D – 2
90201–10021	E – 6
90201–10029	C – 11
90201–10033	B – 2
90201–10035	E – 11
90201–10039	F – 10
90201–10141	D – 11
90201–10669	E – 13
90201–12575	C – 15
90201–12790	F – 10
90201–16027	E – 11
90201–18013	D – 9
90201–20016	C – 9
90201–20017	C – 9
90201–25020	E – 7
90201–257H0	C – 13
90201–281U8	D – 11
90202–05088	D – 15
90202–05224	D – 15
90202–06170	E – 15
90202–30235	D – 11
90206–17084	E – 11
90208–20001	C – 10
90209–08295	E – 11
90209–25011	C – 12
90209–28008	C – 12
90214–25003	C – 12
90214–25004	C – 12
90214–28002	C – 13
90214–29002	C – 12
90215–30233	C – 13
90240–08005	E – 14
90269–05001	E – 2
90269–06001	D – 2
90269–06003	D – 3
90269–06008	F – 2
90269–07007	D – 8
90269–07008	D – 8
90269–07076	D – 5
90269–07077	D – 4

PART NO.	GRID NO.
90282–03001	F – 10
90338–08163	D – 11
90340–12003	C – 8
90340–14132	B – 14
90340–18002	B – 2
90340–32004	C – 7
90387–05042	F – 8
90387–06009	D – 8
90387–0600V	D – 9
90387–06026	D – 3
90387–06112	B – 10
90387–06130	D – 8
90387–061W6	D – 14
90387–06222	D – 15
90387–062L2	E – 2
90387–062M9	D – 7
90387–064T3	F – 2
90387–065J6	D – 4
90387–06M60	C – 5
90387–07391	B – 12
90387–0804S	C – 15
90387–09012	D – 5
90387–10043	D – 9
	D – 10
90387–10050	E – 11
90387–1012A	D – 8
	D – 10
90387–10636	E – 13
90387–1211D	C – 15
90387–22002	E – 4
90387–25007	C – 12
90387–25008	C – 13
90387–28001	E – 6
90387–28003	C – 12
90387–28004	C – 12
90387–31003	C – 12
90401–10172	E – 10
	E – 14
90401–20145	B – 14
90413–07007	D – 14
90413–07023	B – 11
90413–08012	C – 3
90430–06014	B – 2
	B – 10
90430–06166	C – 6
90430–08143	C – 7
90430–10005	E – 10
	E – 14

PART NO.	GRID NO.
90430–10148	F – 10
90445–08022	D – 7
90445–087K6	D – 7
90445–11418	E – 2
90445–19002	E – 11
90445–19003	E – 13
90446–15386	E – 14
90450–22017	B – 12
90450–32001	B – 10
	B – 12
90450–35001	B – 11
90450–38040	B – 9
	B – 11
90450–62002	B – 15
90461–10010	D – 14
90461–15139	E – 2
90462–08057	F – 10
90464–04001	C – 5
90464–07259	D – 4
90464–07M40	D – 7
90464–10008	E – 9
90464–12012	F – 13
90464–12036	F – 13
90464–13073	B – 11
	F – 13
90464–13077	F – 13
90464–16021	D – 5
90464–17003	D – 8
90464–20003	E – 15
90464–20191	E – 9
90464–23002	B – 12
90464–28003	C – 4
90464–30040	C – 3
90464–51001	F – 10
90464–62085	E – 15
90465–08053	F – 10
90465–08054	F – 10
90467–08075	D – 7
90467–080A1	D – 7
90467–09006	C – 3
	D – 14
90467–11090	B – 11
90467–120A3	E – 14
90467–14015	B – 15
90467–14171	B – 15
90467–17128	C – 4
90467–180A0	C – 4
90467–18172	C – 4

PART NO.	GRID NO.
90467–200A0	B – 10
	B – 12
90480–01333	D – 2
90480–01559	D – 7
90480–08264	B – 15
90480–11009	F – 8
90480–12003	D – 9
90480–12010	B – 10
90480–12072	D – 4
90480–12314	D – 15
90480–13004	D – 5
90480–13010	B – 13
90480–13014	C – 8
90480–13018	D – 15
90480–14013	D – 3
90480–14229	F – 7
90480–14604	C – 5
90480–15363	B – 11
90480–18276	F – 8
90480–20001	D – 7
90501–064L1	C – 14
90501–12743	E – 12
90501–230A0	C – 10
90506–18020	E – 11
90506–20014	E – 14
90506–23010	E – 13
90506–40007	E – 13
90508–18051	C – 10
90508–32020	C – 15
91312–05010	D – 14
91312–06016	D – 14
91312–06025	B – 14
91312–06040	B – 9
91312–06080	F – 4
91312–06090	D – 14
91314–06020	B – 8
91314–06105	B – 2
91314–08030	D – 11
	D – 13
91314–08040	D – 13
91317–04025	F – 12
91317–05020	E – 9
91317–05025	E – 9
91317–08030	D – 11
91380–06014	C – 5
	C – 8
91401–20012	E – 14
91401–25015	E – 12

PART NO.	GRID NO.
91492–12010	C – 2
91702–08040	E – 12
91808–16023	B – 2
91808–30031	B – 9
92012–05030	F – 12
92012–06014	D – 8
92014–08012	C – 7
92014–08020	E – 14
92017–06016	D – 15
92502–06010	C – 2
92902–04100	E – 10
92902–04600	E – 10
92902–05200	F – 8
92907–08600	C – 10
92907–10200	D – 11
92990–03100	C – 2
92990–06600	C – 5
93102–12106	C – 15
93102–12372	B – 9
93102–15212	C – 10
93102–40330	C – 13
93106–28043	E – 4
93106–40013	E – 6
93109–17071	D – 8
93210–04092	C – 6
93210–06667	B – 10
	B – 13
93210–09165	B – 13
93210–14003	B – 13
	C – 6
93210–15566	B – 14
93210–16325	C – 8
93210–18397	C – 9
93210–22298	B – 13
93210–22382	C – 7
93210–235A1	B – 10
	B – 11
93210–27194	C – 7
93210–27370	B – 10
93210–32172	C – 7
93210–357A2	B – 9
93210–47675	B – 9
93210–49046	B – 11
93210–57003	C – 8
93305–20605	C – 12
93306–00106	B – 9
	C – 14
93306–00304	C – 10

PART NO.	GRID NO.
93306–00420	E – 4
93306–20124	C – 7
93306–20230	C – 9
93306–20531	E – 6
93306–205A2	C – 13
93306–20652	C – 12
93306–27208	C – 12
93310–232R9	C – 10
93315–31502	C – 10
93315–31758	D – 8
93315–41762	D – 8
93315–42536	D – 8
93317–11096	C – 10
93317–11295	C – 15
93317–33590	E – 6
93317–42599	D – 8
93399–99932	D – 11
93399–99957	D – 11
93420–61M07	E – 6
93440–28184	C – 12
93440–31187	C – 12
93440–52009	C – 13
93440–62032	C – 13
93450–18157	B – 5
93501–04011	E – 12
93603–12007	B – 9
93603–17070	B – 9
93605–10108	C – 7
93607–44002	B – 8
93610–20189	C – 7
93900–00030	E – 4
	E – 6
94112–17094	E – 4
94119–17062	E – 6
94580–25078	B – 13
94582–10122	E – 7
94591–60122	B – 8
94682–05031	E – 7
94701–00403	B – 2
95022–06016	F – 10
95022–06020	C – 15
95024–06012	B – 2
95024–06025	B – 9
95024–10040	D – 2
95027–06008	F – 12
95027–06020	F – 9
95302–08600	E – 7
95304–06700	C – 15

PART NO.	GRID NO.
95602–04100	D – 6
95602–05100	D – 5
	F – 8
95602–05200	F – 12
95602–06100	D – 6
95602–06200	E – 3
95602–10200	E – 13
95604–10200	D – 2
95607–06200	D – 4
	F – 9
95607–10200	D – 9
	D – 10
	D – 11
	E – 13
95612–08625	B – 2
95617–06100	E – 10
95702–05500	D – 6
95702–06500	C – 5
	E – 3
95702–08500	D – 5
95707–05500	F – 11
95707–06500	E – 10
	F – 2
95802–06008	E – 12
95807–06010	F – 2
95807–06012	B – 12
95812–06050	C – 6
95812–06060	C – 6
95812–06070	C – 6
95812–08016	D – 3
95812–08050	C – 6
95812–08060	C – 6
95814–08030	C – 5
95814–10040	E – 13
95817–06012	E – 10
95817–08025	D – 6
95822–06014	D – 5
95822–06025	F – 12
95822–08025	D – 5
95822–08030	D – 5
95827–06020	D – 6
	E – 3
95827–06025	D – 5
95827–08035	F – 2
97702–50016	D – 5
97702–50025	B – 15
97702–50514	F – 10
97702–50520	B – 15

PART NO.	GRID NO.	PART NO.	GRID NO.	PART NO.	GRID NO.	PART NO.	GRID NO.	PART NO.	GRID NO.	PART NO.	GRID NO.
97702–60520	F – 11										
97706–04012	F – 5										
	F – 8										
97707–50016	F – 7										
98502–04012	E – 10										
98502–05014	C – 2										
98502–06012	C – 2										
98507–03016	C – 2										
98507–04010	F – 9										
98507–05022	F – 9										
98507–05030	F – 9										
98507–05045	F – 9										
98507–06020	C – 3										
98707–03016	F – 9										
98902–05008	D – 14										
99001–07600	C – 10										
99002–10600	C – 15										
99009–10400	C – 11										
99480–10018	C – 7										
99530–08012	B – 14										
99530–10014	C – 6										
99530–10114	B – 2										
	B – 4										