YAMAHA

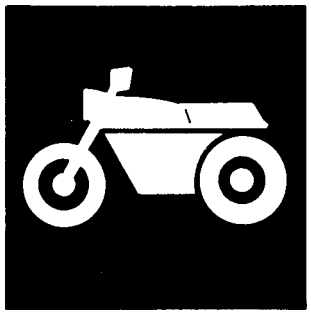

# CATALOGO DE REPUESTOS

# DT125D (5GP3) COLOMBIA
# DT175D (3TK7) COLOMBIA

1A5GP-261S1

YAMAHA GENUINE Parts & Accessories

DT125D/DT175D
CATALOGO DE REPUESTOS
©2002, Yamaha Motor Co., Ltd.
1ªedición, Feb. 2002
Reservados todos los derechos.
Se prohíbe expresamente toda reimpresión
o utilización no autorizada de este manual
sin el consentimiento por escrito de
Yamaha Motor Co., Ltd.
Impreso en Japón

# PROLOGO

Este Catálogo de Respuetos corresponds a las piezas para el(los) modelo(s) del recuadro siguiente. Al formular el pedido de repuestos, se ruega citar este Catálogo de Repuestos y especificar correctamente los números de parte y los nombres de parte.

DT125D(5GP3),DT175D(3TK7)

1. Las modificaciones y agregados que se hayan realizado después de la edición de este Catálogo de Repuestos, serán anunciados en las Informaciones de Recambios Yamaha.
2. Abreviaciones
   En este. Catálogo de Repuestos se emplean las siguientes abreviaciones.
   "UR" Usar el número de partes especificado
   "UN" Usar la cantidad necesaria
   "AP" Piezas sustitutivas
   "LM" Fabricación local (Partes necesarias que se pedirán localmente)
   "F#" No. de bastidor aplicable
3. Las piezas suministradas como conjunto se describen con un punto (.) que precede al nombre de la pieza como se indica a continuación.

   EJEMPLO
   CONJUNTO CARBURADOR
   .INYECTOR, piloto
   .BOQUILLA, principal
4. Cantidad de componentes de un conjunto
   La numeración que aparece a la derecha de cada descripción, indica la cantidad de piezas por cada unidad de conjunto.

   EJEMPLO

| PIEZAS NO. | DESCRIPCION | CANT. | OBSERVACION |
|---|---|---|---|
| 2F5-83310-60 | ENSAMBLAJE DE LA LUZ | 2 | |
| 115-83311-60 | .BOMBILLA (6V-1 8W) | 1 | |
| 1M1-83309-60 | .REFLECTOR | 1 | |

5. Los colores de los componentes se indican como sigue en la columna de"OBSERVACIONES".

   EJEMPLO

| PIEZAS NO. | DESCRIPCION | CANT. | OBSERVACION |
|---|---|---|---|
| 2N4-24110-00-X5 | COMP. DEL TANQUE | 1 | MXR |
| 3J1-24240-10 | .GRAFICO, DEL TANQUE | 1 | PARA MXR |

6. Números de Serie y Códigos de Color aplicables

| |
|---|
| No. de Serie del motor. |
| No. de Serie del bastidor |

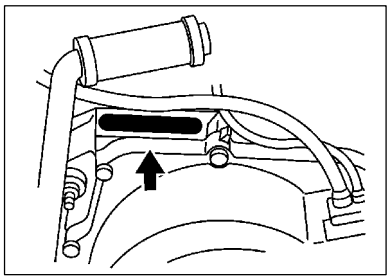

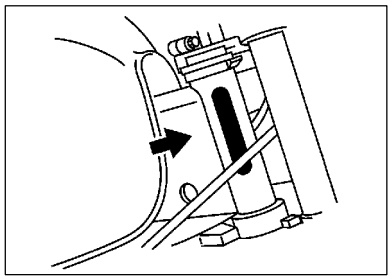

| Código de Color | Nombre del Color | Abreviación |
|---|---|---|
| 00GE | SILKY WHITE | SW |
| 0580 | VIVID RED COCKTAIL 7 | VRC7 |
| 0521 | CYAN METALLIC 3 | CM3 |
| 0564 | DEEP PURPLISH BLUE METALLIC C | DPBMC |

7. Debe tenerse en cuenta que las ilustraciones sirven como guia para la búsqueda de las referencias y no deben usarse para el montaje. Durante el montaje, se recomienda usar el manual de Taller correspondiente.
8. EL asterisco (*)antes del número de referencia indica los elementos modificados después de la primera edición.

# CONTENIDO

## MOTOR


CILINDRO . . . . . 1
CIGUENAL. PISTON . . . . . 2
BOMBA DE ACEITE . . . . . 4
ADMISION . . . . . 6
CARBURADOR . . . . . 8
DESCARGA . . . . . 10
CARTER . . . . . 11
CUBIERTA DE CARTER 1 . . . . . 12
ARRANQUE . . . . . 13
EMBRAGUE . . . . . 14
TRANSMISION . . . . . 16
ENGR. DE TACOMETRO . . . . . 18
LEVA DE CAMBIO. HORQ . . . . . 19
EJE DE CAMBIO. PEDAL . . . . . 20


## SHASIS


CUADRO . . . . . 21
GUARDABARRO . . . . . 22
CUBIERTA LATERAL . . . . . 23
DEPOSITO DE ACEITE . . . . . 25
BRAZO TRASERO . . . . . 26
SUSPENSION TRASERO . . . . . 28
DIRECCION . . . . . 29
HORQUILLA DELANTERA . . . . . 30
DEPOSITO DE COMBUSTIBLE . . . . . 32
ASIENTO . . . . . 33
RUEDA DELANTERA . . . . . 34
CALIBRE FRENO DELANTERA . . . . . 35
RUEDA TRASERA . . . . . 36
MANUBRIO. CABLE . . . . . 38
CILINDRO MAESTRO DELANTERO . . . . . 40
SOPORTE. APOYAPIE . . . . . 41
BOVEDA 1 . . . . . 43
GENERADOR . . . . . 44
LUZ DE DESTELLADOR . . . . . 45
MEDIDOR . . . . . 46
FARO DELANTERO . . . . . 47
LUZ DE COLA . . . . . 48
INTERRUPTOR DE MANIJA. PALANCA . . . . . 49
EQUIPO ELECTRICO 1 . . . . . 50
EQUIPO ELECTRICO 2 . . . . . 51


## INDICE


INDICE NUMERICO . . . . . 52

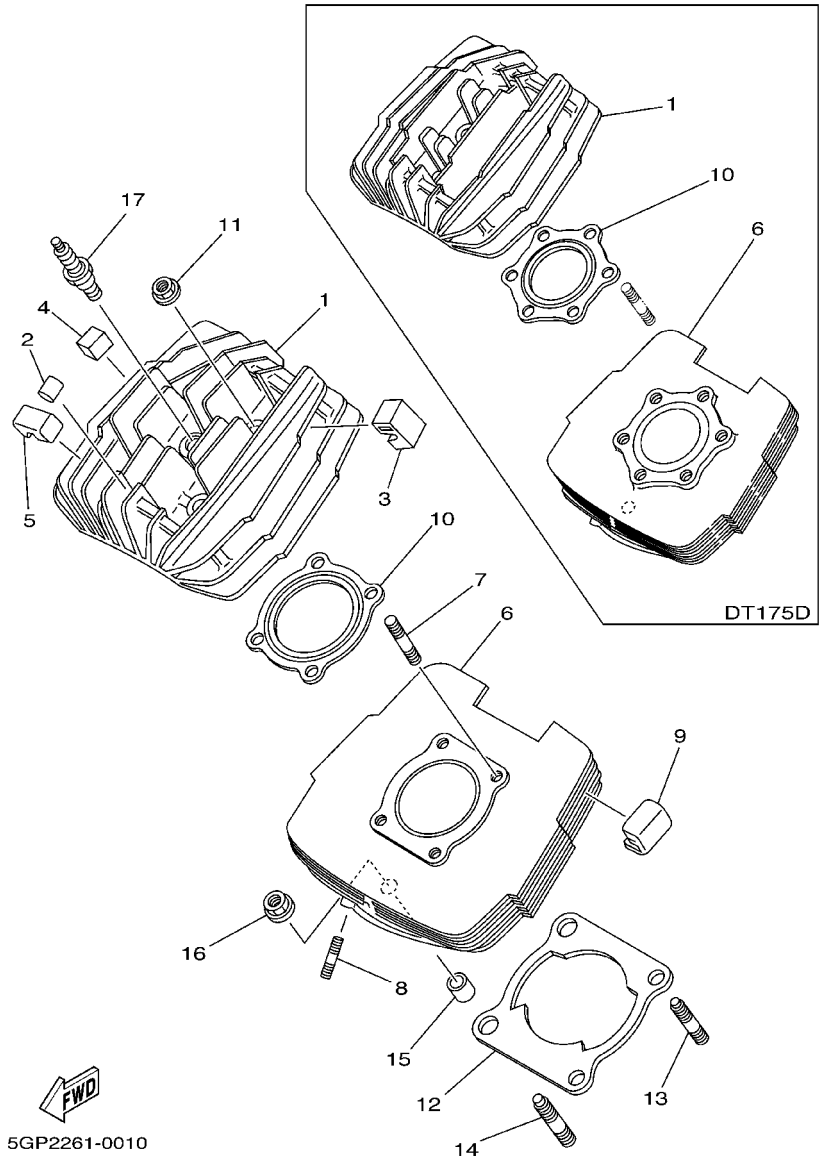


## FIG. 1 CILINDRO

| REF. NO. | CODIGO NO. | DESCRIPCION | 5GP3 | 3TK7 | | | | OBSERVACION |
|---|---|---|---|---|---|---|---|---|
| 1 | 18G–11111–00 | CULATA CILINDRO 1 | 1 | | | | | |
| | 18L–11111–00 | CULATA CILINDRO 1 | | 1 | | | | |
| 2 | 4F2–11162–00 | AMORTIGUADOR 2 | 4 | | | | | |
| | 363–11161–00 | AMORTIGUADOR 1 | | 5 | | | | |
| 3 | 18G–11161–00 | AMORTIGUADOR 1 | 1 | 1 | | | | |
| 4 | 18G–11162–00 | AMORTIGUADOR 2 | 1 | 1 | | | | |
| 5 | 18G–11128–00 | AMORTIGUADOR 4 | 2 | 2 | | | | |
| 6 | 18G–11311–01 | CILINDRO 1 | 1 | | | | | |
| | 18L–11311–00 | CILINDRO 1 | | 1 | | | | |
| 7 | 90116–08394 | ESPARRAGO | 4 | | | | | |
| | 90116–08394 | ESPARRAGO | | 6 | | | | |
| 8 | 90116–06016 | ESPARRAGO | 2 | 2 | | | | |
| 9 | 18G–11127–00 | AMORTIGUADOR 3 | 4 | 4 | | | | |
| 10 | 2A6–11181–00 | JUNTA, DE CULATA 1 | 1 | | | | | |
| | 2A7–11181–10 | JUNTA, DE CULATA 1 | | 1 | | | | |
| 11 | 90179–08299 | TUERCA | 4 | | | | | |
| | 90179–08299 | TUERCA | | 6 | | | | |
| 12 | 18G–11351–02 | JUNTA, DE CILINDRO | 1 | | | | | |
| | 3TN–11351–00 | JUNTA, DE CILINDRO | | 1 | | | | |
| 13 | 90116–10278 | ESPARRAGO | 2 | 2 | | | | |
| 14 | 90116–10279 | ESPARRAGO | 2 | 2 | | | | |
| 15 | 99530–14016 | PASADOR, DE ESPIGA | 2 | 2 | | | | |
| 16 | 90179–10279 | TUERCA | 4 | 4 | | | | |
| 17 | 94701–00045 | BUJIA (NGK B8ES) | 1 | 1 | | | | |

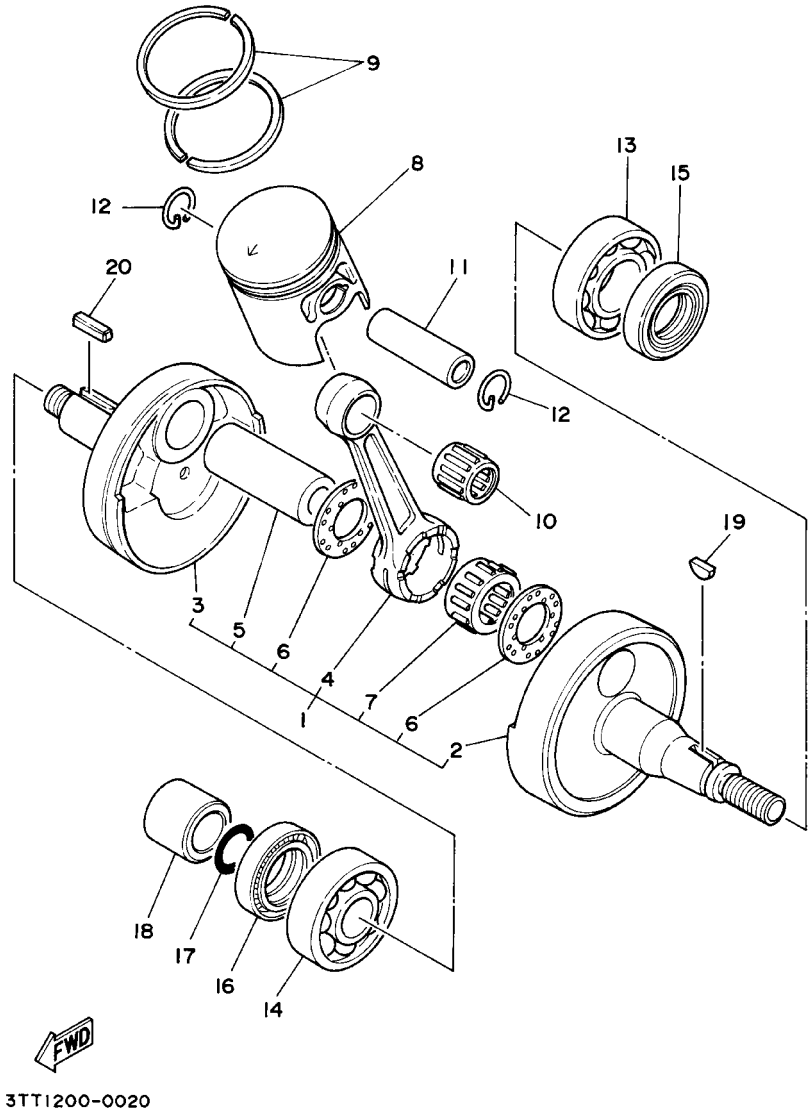


## FIG. 2 CIGUENAL. PISTON

| REF. NO. | CODIGO NO. | DESCRIPCION | 5GP3 | 3TK7 | | | | OBSERVACION |
|---|---|---|---|---|---|---|---|---|
| 1 | 18G–11400–00 | CIGUENAL COMPLETO | 1 | 1 | | | | |
| 2 | 1W1–11412–01 | .MANIVELA 1 | 1 | 1 | | | | |
| 3 | 1W1–11422–01 | .MANIVELA 2 | 1 | 1 | | | | |
| 4 | 4Y2–11651–00 | .BIELA | 1 | 1 | | | | |
| 5 | 3M5–11681–00 | .PASADOR MANIVELA 1 | 1 | 1 | | | | |
| 6 | 90209–22071 | .ARANDELA DE SEPARACION | 2 | 2 | | | | |
| 7 | 93310–42231 | .COJINETE | 1 | 1 | | | | |
| 8 | 18G–11631–01–96 | PISTON (STD) | 1 | | | | | |
| | 18L–11631–00–97 | PISTON (STD) | | 1 | | | | |
| | 18G–11635–01 | PISTON (0.25MM O/S) | 1 | | | | | AP |
| | 18L–11635–00 | PISTON (0.25MM O/S) | | 1 | | | | AP |
| | 18G–11636–01 | PISTON (0.50MM O/S) | 1 | | | | | AP |
| | 18L–11636–00 | PISTON (0.50MM O/S) | | 1 | | | | AP |
| 9 | 3TL–11603–00 | JUEGO DE ANILLOS (STD) | 1 | | | | | |
| | 3TK–11603–00 | JUEGO DE ANILLOS (STD) | | 1 | | | | |
| | 3TL–11604–00 | JUEGO DE ANILLOS (0.25MM O/S) | 1 | | | | | AP |
| | 3TK–11604–00 | JUEGO DE ANILLOS (0.25MM O/S) | | 1 | | | | AP |
| | 3TL–11605–00 | JUEGO DE ANILLOS (0.50MM O/S) | 1 | | | | | AP |
| | 3TK–11605–00 | JUEGO DE ANILLOS (0.50MM O/S) | | 1 | | | | AP |
| 10 | 93310–216A3 | COJINETE | 1 | | | | | |
| | 93310–216E1 | COJINETE | | 1 | | | | |
| 11 | 4Y2–11633–00 | PASADOR, PISTON | 1 | | | | | |
| | 251–11633–00 | PASADOR, PISTON | | 1 | | | | |
| 12 | 93450–17025 | BOLA | 2 | | | | | |
| | 93450–17044 | BOLA | | 2 | | | | |
| 13 | 93306–20529 | COJINETE (B6205C4) | 1 | | | | | |
| | 93306–30421 | COJINETE (B6304C3) | | 1 | | | | |

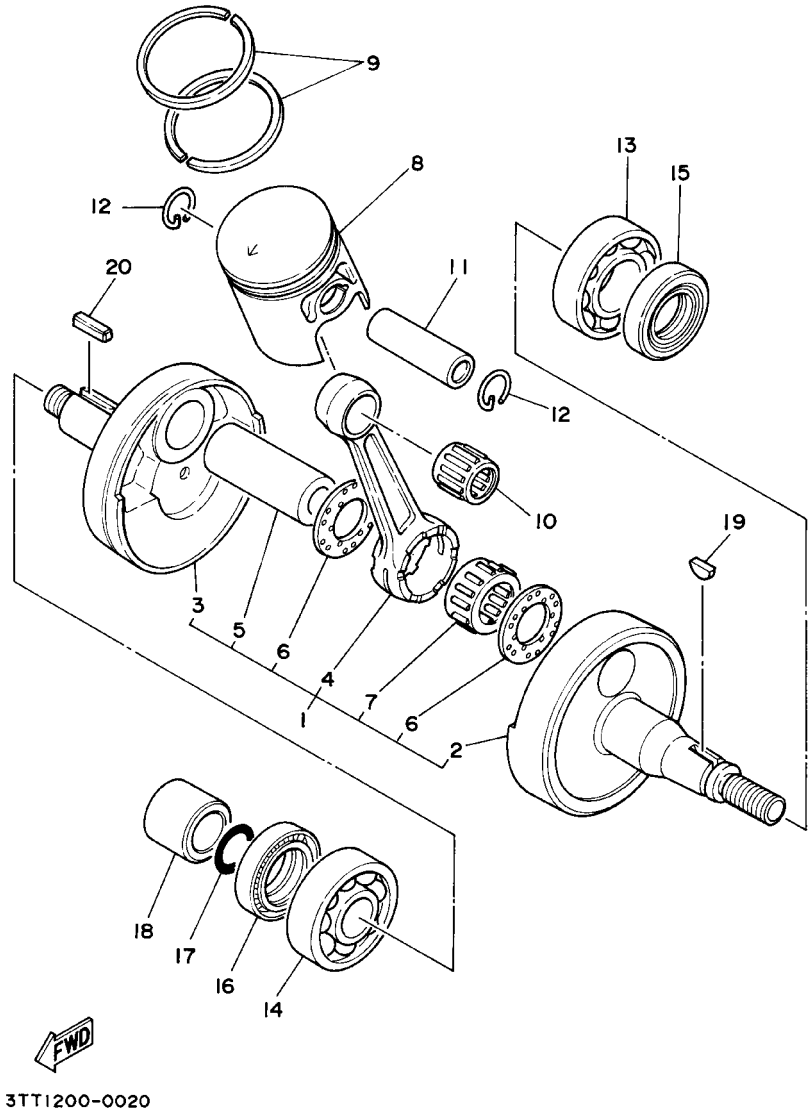


## FIG. 2 CIGUENAL. PISTON

| REF. NO. | CODIGO NO. | DESCRIPCION | 5GP3 | 3TK7 | | | | OBSERVACION |
|---|---|---|---|---|---|---|---|---|
| 14 | 93306–30421 | COJINETE (B6304C3) | 1 | | | | | |
| | 93306–20529 | COJINETE (B6205C4) | | 1 | | | | |
| 15 | 93102–25061 | SELLO ACEITE | 1 | 1 | | | | |
| 16 | 93103–28011 | SELLO ACEITE | 1 | 1 | | | | |
| 17 | 93210–18023 | ANILLO O | 1 | 1 | | | | |
| 18 | 90387–20488 | COLLAR | 1 | 1 | | | | |
| 19 | 90280–03017 | CUNA WOODRUFF | 1 | 1 | | | | |
| 20 | 90282–05005 | CHAVETA, RECTA | 1 | 1 | | | | |

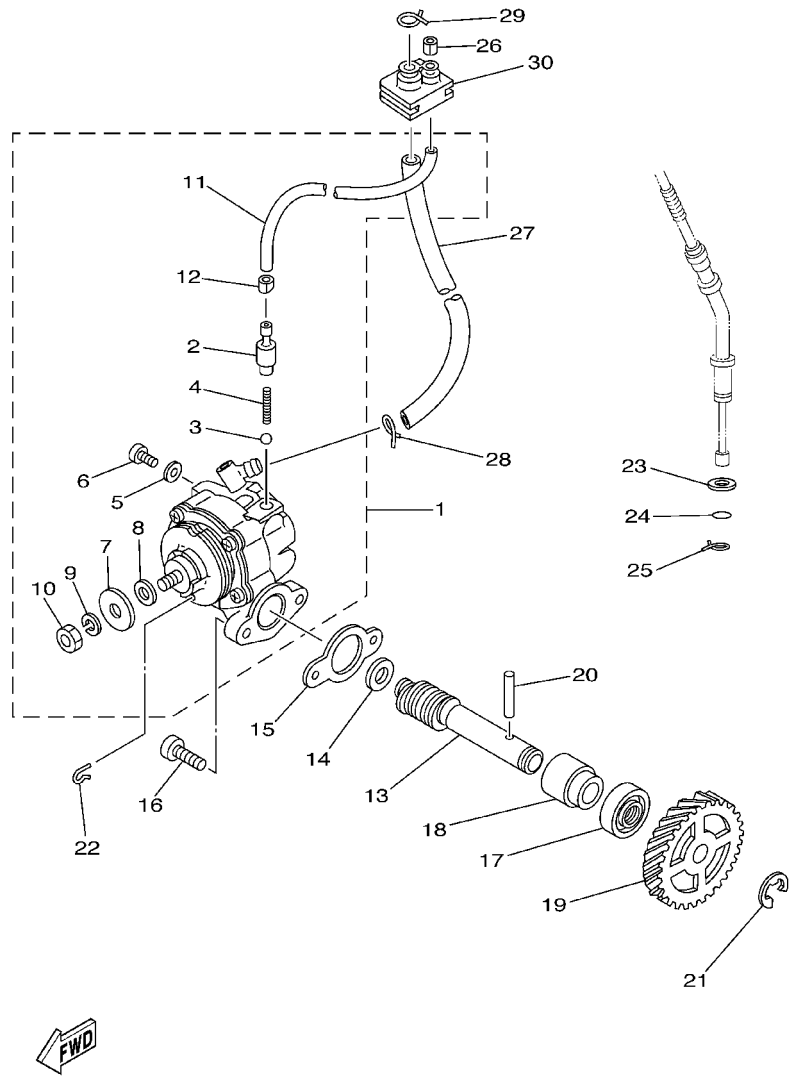


5GP2261-0031

## FIG. 3 BOMBA DE ACEITE

| REF. NO. | CODIGO NO. | DESCRIPCION | 5GP3 | 3TK7 | | | | OBSERVACION |
|---|---|---|---|---|---|---|---|---|
| 1 | 18G–13101–00 | BOMBA DE ACEITE COMPLETA | 1 | | | | | |
| | 18L–13101–00 | BOMBA DE ACEITE COMPLETA | | 1 | | | | |
| 2 | 402–13552–00 | .BOQUILLA | 1 | 1 | | | | |
| 3 | 93505–32002 | .BOLA | 1 | 1 | | | | |
| 4 | 90501–02217 | .RESORTE DE COMPRESION | 1 | 1 | | | | |
| 5 | 90430–04004 | .JUNTA | 1 | 1 | | | | |
| 6 | 98901–04008 | .TORNILLO DE LIGAR | 1 | 1 | | | | |
| 7 | 137–13138–01 | .PLACA DE AJUSTE | 1 | 1 | | | | |
| 8 | 137–13137–00–03 | .CUNA EMBOLO (0.3T) | 1 | 1 | | | | UR |
| | 137–13137–00–05 | .CUNA EMBOLO (0.5T) | 1 | 1 | | | | UR |
| | 137–13137–00–10 | .CUNA EMBOLO (1.0T) | 1 | 1 | | | | UR |
| 9 | 92901–05100 | .ARANDELA | 1 | 1 | | | | |
| 10 | 95301–05600 | .TUERCA | 1 | 1 | | | | |
| 11 | 90445–05681 | .TUBO (L210) | 1 | 1 | | | | |
| 12 | 90468–02033 | .PRESILLA | 1 | 1 | | | | |
| 13 | 522–13175–01 | EJE, SINFIN | 1 | | | | | |
| | 275–13175–01 | EJE, SINFIN | | 1 | | | | |
| 14 | 90201–08624 | ARANDELA PLANA | 1 | 1 | | | | |
| 15 | 126–13116–01 | JUNTA, CAJA DE BOMBA | 1 | 1 | | | | |
| 16 | 98507–05014 | TORNILLO DE CABEZA CON PLANA | 2 | 2 | | | | |
| 17 | 93101–10001 | SELLO ACEITE | 1 | 1 | | | | |
| 18 | 137–13176–00 | CASQVILLO, EXT.DE EJE SINFIN | 1 | 1 | | | | |
| 19 | 2A6–13178–00 | ENGRANAJE TRACC.DE BOMBA (24T) | 1 | 1 | | | | |
| 20 | 93603–22028 | PASADOR DE CLAVIJA | 1 | 1 | | | | |
| 21 | 99001–08600 | PRESILLA REDONDA | 1 | 1 | | | | |
| 22 | 363–13133–01 | PRESILLA | 1 | 1 | | | | |
| 23 | 92907–08600 | ARANDELA | 1 | 1 | | | | |

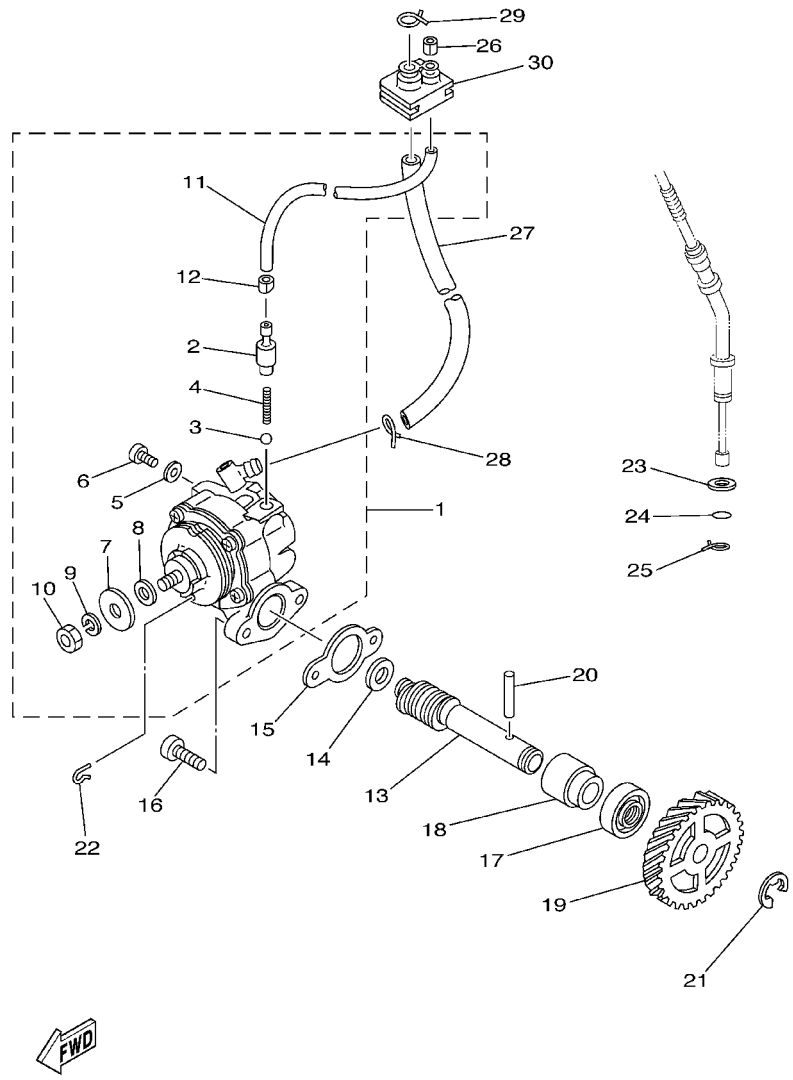


5GP2261-0031

## FIG. 3 BOMBA DE ACEITE

| REF. NO. | CODIGO NO. | DESCRIPCION | 5GP3 | 3TK7 | | | | OBSERVACION |
|---|---|---|---|---|---|---|---|---|
| 24 | 93210–07100 | ANILLO O | 1 | 1 | | | | |
| 25 | 90468–08086 | PRESILLA | 1 | 1 | | | | |
| 26 | 90468–02033 | PRESILLA | 1 | 1 | | | | |
| 27 | 90445–083J4 | TUBO (L340) | 1 | 1 | | | | |
| 28 | 90467–08075 | PRESILLA | 1 | 1 | | | | |
| 29 | 90467–08075 | PRESILLA | 1 | 1 | | | | |
| 30 | 18G–13174–00 | SOPORTE, TUBO DE ACEITE | 1 | 1 | | | | |

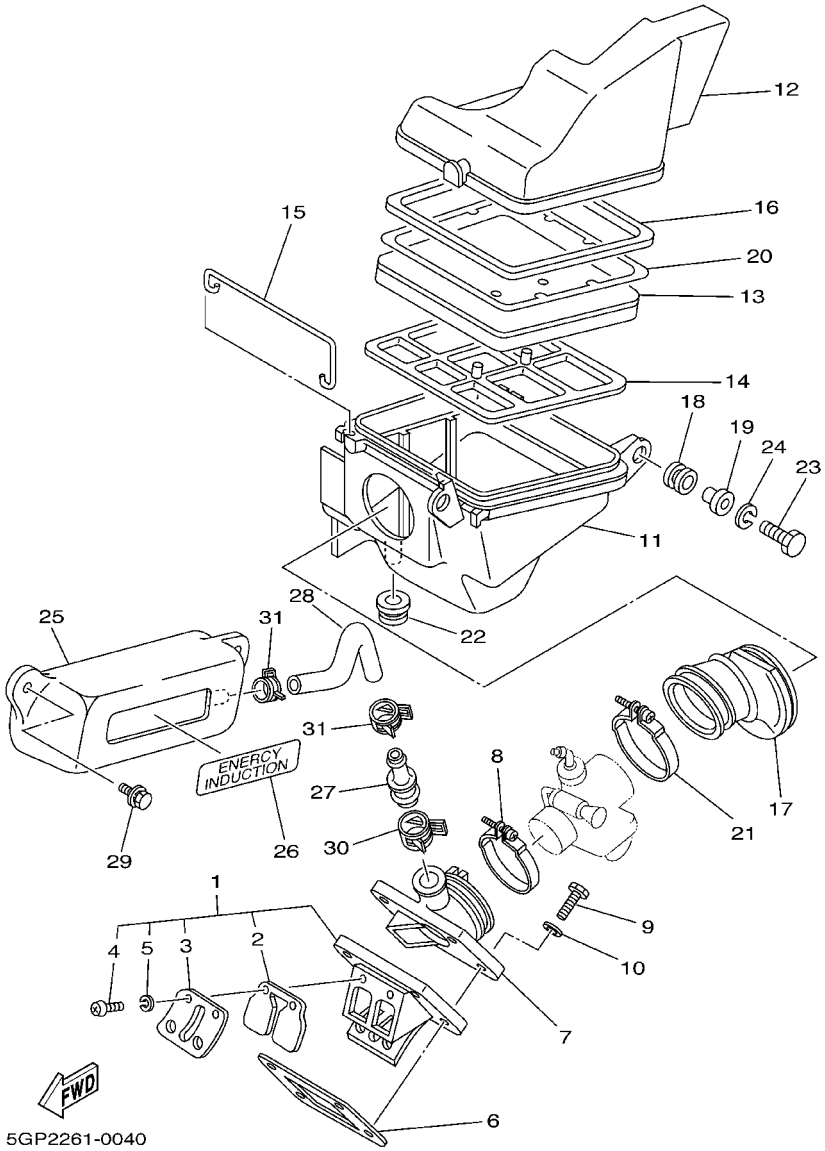


## FIG. 4 ADMISION

| REF. NO. | CODIGO NO. | DESCRIPCION | 5GP3 | 3TK7 | | | | OBSERVACION |
|---|---|---|---|---|---|---|---|---|
| 1 | 10V–13610–01 | VALVULA DE LAMINAS COMPLETA | 1 | 1 | | | | |
| 2 | 10V–13613–01 | .VALVULA DE LAMINAS | 2 | 2 | | | | |
| 3 | 10V–13616–01 | .TOPE DE VALVULA DE LAMINAS | 2 | 2 | | | | |
| 4 | 98507–03008 | .TORNILLO DE CABEZA CON PLANA | 4 | 4 | | | | |
| 5 | 92907–03100 | .ARANDELA | 4 | 4 | | | | |
| 6 | 3TT–13621–00 | JUNTA, DE VALV.DE EMPAQUE | 1 | 1 | | | | |
| 7 | 10V–13565–01 | TOBERA, DE ADMISION | 1 | 1 | | | | |
| 8 | 90450–44046 | BRIDA, MANGUERA | 1 | 1 | | | | |
| 9 | 97007–06025 | PERNO | 4 | 4 | | | | |
| 10 | 92907–06600 | ARANDELA | 4 | 4 | | | | |
| 11 | 18G–14411–00 | CAJA FILTRO DEL AIRE 1 | 1 | 1 | | | | |
| 12 | 18G–14412–00 | TAPA CAJA DEL FILTRO 1 | 1 | 1 | | | | |
| 13 | 3TK–14451–00 | ELEMENTO DEL FILTRO DEL AIRE | 1 | 1 | | | | |
| 14 | 18G–14458–00 | GUIA | 1 | 1 | | | | |
| 15 | 18G–14493–00 | SOPORTE 1 | 2 | 2 | | | | |
| 16 | 18G–14452–00 | SELLO | 1 | 1 | | | | |
| 17 | 18G–14453–01 | UNION DEL FILTRO DEL AIRE 1 | 1 | 1 | | | | |
| 18 | 90480–14102 | TAPON | 2 | 2 | | | | |
| 19 | 90387–07391 | COLLAR | 2 | 2 | | | | |
| 20 | 3TK–14472–00 | PLACA DE ELEMENTO | 1 | 1 | | | | |
| 21 | 90460–49058 | BRIDA, DE UNION | 1 | 1 | | | | |
| 22 | 90480–18171 | TAPON | 1 | 1 | | | | |
| 23 | 97007–06025 | PERNO | 2 | 2 | | | | |
| 24 | 92907–06100 | ARANDELA | 2 | 2 | | | | |
| 25 | 18G–13581–00 | CAMARA DE AIRE | 1 | 1 | | | | |
| 26 | 18G–1441K–00 | EMBLEMA | 1 | 1 | | | | |
| 27 | 18G–13584–00 | TUBO MULTIPLE | 1 | 1 | | | | |

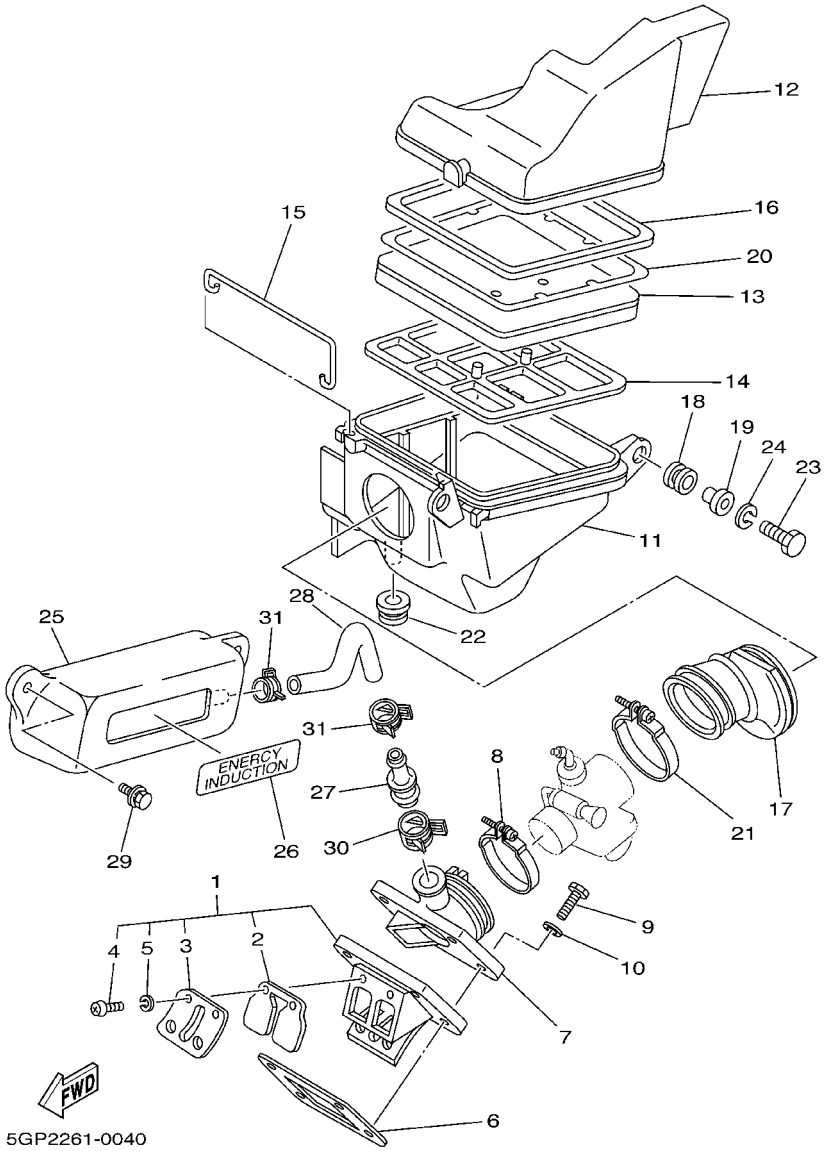


## FIG. 4 ADMISION

| REF. NO. | CODIGO NO. | DESCRIPCION | 5GP3 | 3TK7 | | | | OBSERVACION |
|---|---|---|---|---|---|---|---|---|
| 28 | 18G–14465–00 | TUBO DE UNION | 1 | 1 | | | | |
| 29 | 90119–06056 | TORNILLO CON ARANDELA | 2 | 2 | | | | |
| 30 | 90467–20050 | PRESILLA | 1 | 1 | | | | |
| 31 | 90467–13073 | PRESILLA | 2 | 2 | | | | |

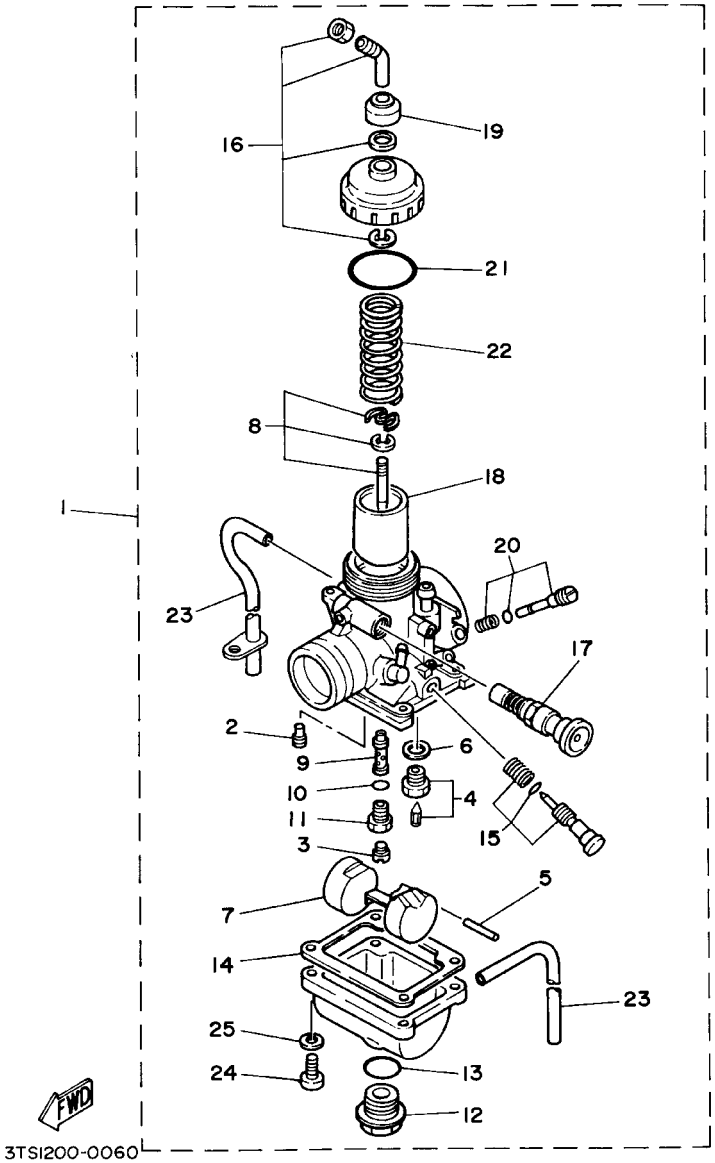


## FIG. 5 CARBURADOR

| REF. NO. | CODIGO NO. | DESCRIPCION | 5GP3 | 3TK7 | | | | OBSERVACION |
|---|---|---|---|---|---|---|---|---|
| 1 | 3TL–14101–01 | CARBURADOR COMPLETO 1 | 1 | | | | | |
| | 3TK–14101–00 | CARBURADOR COMPLETO 1 | | 1 | | | | |
| 2 | 260–14142–25 | .SURTIDOR DE RALENTI (# 25) | 1 | | | | | |
| | 260–14142–22 | .SURTIDOR DE RALENTI (# 22.5) | | 1 | | | | |
| 3 | 137–14143–33 | .SURTIDOR, PRINCIPAL (#165) | 1 | | | | | |
| | 137–14143–34 | .SURTIDOR, PRINCIPAL (#170) | | 1 | | | | |
| 4 | 10V–14190–20 | .VALVULA DE OBTURACION | 1 | | | | | |
| | 1V0–14190–25 | .VALVULA DE OBTURACION | | 1 | | | | |
| 5 | 127–14186–00 | .PASADOR DE LA BOYA | 1 | 1 | | | | |
| 6 | 214–14195–00 | .ARANDELA DE VALVULA DE AGUJA | 1 | 1 | | | | |
| 7 | 314–14185–00 | .BOYA | 1 | 1 | | | | |
| 8 | 18G–1490J–00 | .CJTO. AGUJA | 1 | | | | | |
| | 18L–1490J–00 | .CJTO. AGUJA | | 1 | | | | |
| 9 | 2F5–14141–36 | .BOQUILLA PRINCIPAL | 1 | | | | | |
| | 2F5–14141–38 | .BOQUILLA PRINCIPAL | | 1 | | | | |
| 10 | 214–14147–00 | .ANILLO O | 1 | 1 | | | | |
| 11 | 2N4–14145–00 | .ESPREA | 1 | 1 | | | | |
| 12 | 500–14115–00 | .TAPON DE TORNILLO | 1 | 1 | | | | |
| 13 | 558–14147–00 | .ANILLO O | 1 | 1 | | | | |
| 14 | 304–14184–00 | .JUNTA, CAMARA DE FLOT | 1 | 1 | | | | |
| 15 | 18G–14103–00 | .CJTO. TORNILLO DEL RALENTI | 1 | 1 | | | | |
| 16 | 10X–14106–00 | .TORNILLO AJUSTADOR DE CABLE | 1 | 1 | | | | |
| 17 | 4U5–14171–00 | .EMBOLO DE ARRANQUE | 1 | 1 | | | | |
| 18 | 314–14112–25 | .VALVULA DE ACELERACION 1 | 1 | | | | | |
| | 314–14112–15 | .VALVULA DE ACELERACION 1 | | 1 | | | | |
| 19 | 1M1–14169–00 | .FUNDA | 1 | 1 | | | | |
| 20 | 10W–14104–00 | .CJTO. TORNNILLO DE AIRE | 1 | | | | | |

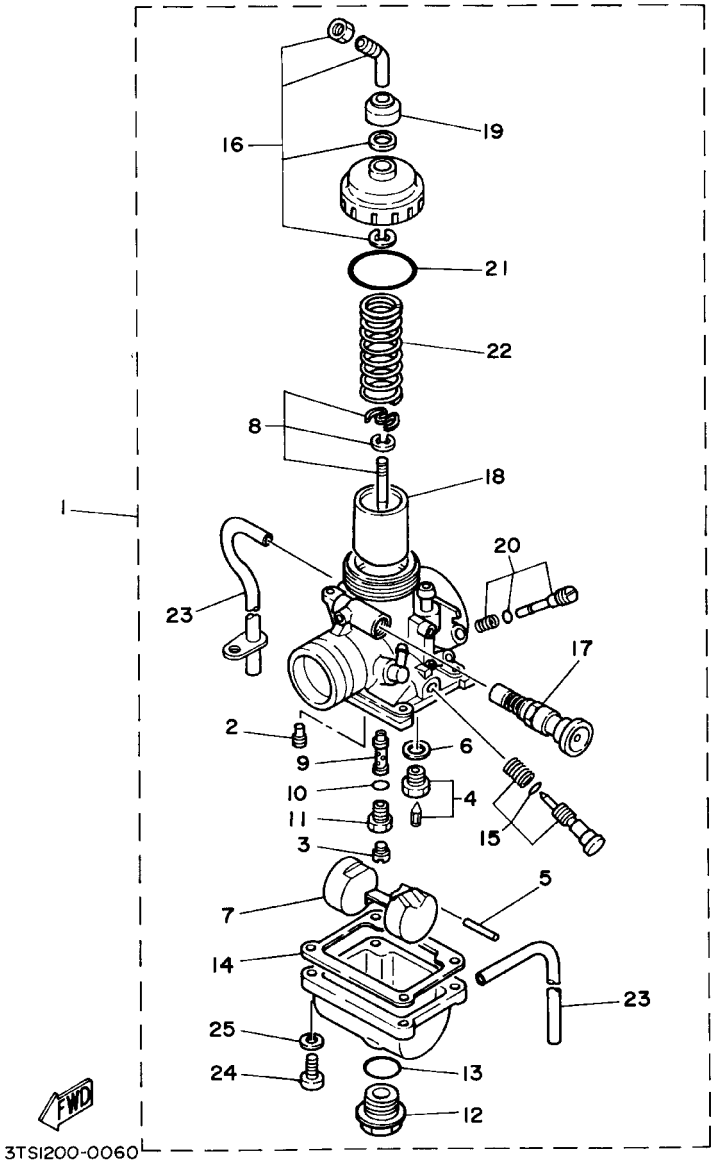


## FIG. 5 CARBURADOR

| REF. NO. | CODIGO NO. | DESCRIPCION | 5GP3 | 3TK7 | | | | OBSERVACION |
|---|---|---|---|---|---|---|---|---|
| 20 | 10W–14104–00 | .CJTO. TORNNILLO DE AIRE | | 1 | | | | |
| 21 | 2A6–14126–00 | .EMPAQUE | 1 | 1 | | | | |
| 22 | 2N4–14131–00 | .RESORTE VALVULA DE ACELERACIO | 1 | 1 | | | | |
| 23 | 183–14196–00 | .TUBO DE DRENASE | 2 | 2 | | | | |
| 24 | 98502–04016 | .TORNILLO DE CABEZA CON PLANA | 4 | 4 | | | | |
| 25 | 92902–04100 | .ARANDELA | 4 | 4 | | | | |

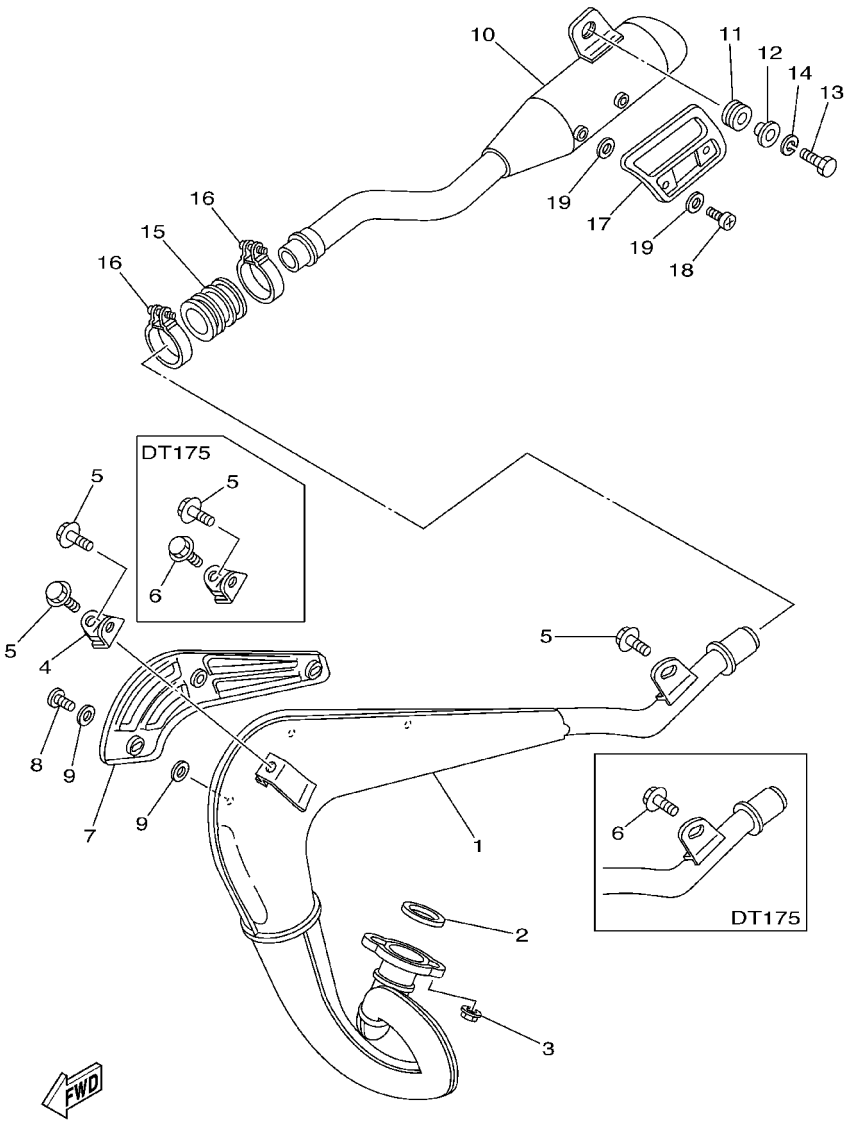


## FIG. 6 DESCARGA

| REF. NO. | CODIGO NO. | DESCRIPCION | 5GP3 | 3TK7 | | | | OBSERVACION |
|---|---|---|---|---|---|---|---|---|
| 1 | 18G–E4610–01 | TUBO DE ESCAPE COMPLETO 1 | 1 | | | | | |
| | 18L–E4610–01 | TUBO DE ESCAPE COMPLETO 1 | | 1 | | | | |
| 2 | 3PA–14613–10 | JUNTA, TUBO DE ESCAPE | 1 | 1 | | | | |
| 3 | 95707–06500 | TUERCA DE BRIDA | 2 | 2 | | | | |
| 4 | 2A6–14772–00 | SOPORTE DE SILENCIADOR | 1 | 1 | | | | |
| 5 | 95807–08012 | TUERCA DE REBORDE | 3 | 1 | | | | |
| 6 | 95027–08012 | PERNO, DE BRIDA | | 2 | | | | |
| 7 | 18G–14718–00 | PROTECTOR DE SILENCIADOR 1 | 1 | 1 | | | | |
| 8 | 98907–06008 | TORNILLO DE LIGAR | 3 | 3 | | | | |
| 9 | 90202–05187 | ARANDELA DE PLANA | 6 | 6 | | | | |
| 10 | 18G–E4753–00 | SILENCIADOR DE ESCAPE | 1 | 1 | | | | |
| 11 | 3TL–F1638–00 | AMORTIGUADOR 1 | 1 | | | | | |
| | 168–21638–00 | AMORTIGUADOR 1 | | 1 | | | | |
| 12 | 90387–093H1 | COLLAR | 1 | 1 | | | | |
| 13 | 97007–08025 | PERNO | 1 | 1 | | | | |
| 14 | 92907–08100 | ARANDELA | 1 | 1 | | | | |
| 15 | 1W2–14714–00 | EMPAQUE DE SILENCIADOR | 1 | 1 | | | | |
| 16 | 90460–37026 | BRIDA, DE UNION | 2 | 2 | | | | |
| 17 | 10V–14758–00 | PROTECTOR DE SILENCIADOR | 1 | 1 | | | | |
| 18 | 98907–06008 | TORNILLO DE LIGAR | 2 | 2 | | | | |
| 19 | 90202–05187 | ARANDELA DE PLANA | 4 | 4 | | | | |

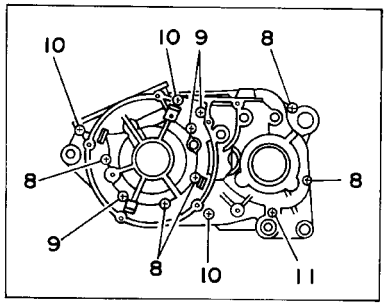


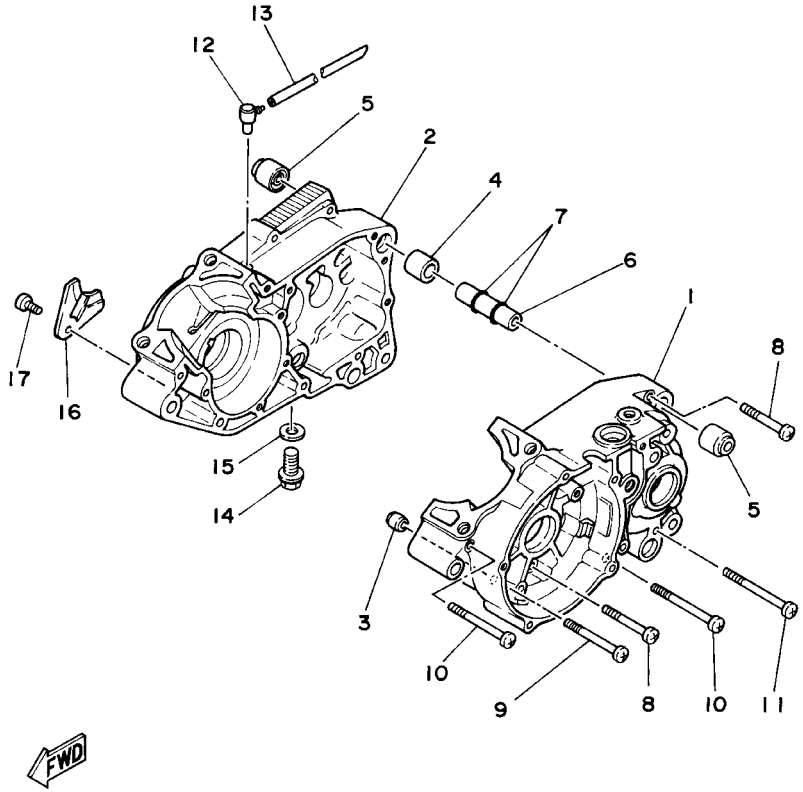


3TT1200-0070

## FIG. 7 CARTER

| REF. NO. | CODIGO NO. | DESCRIPCION | 5GP3 | 3TK7 | | | | OBSERVACION |
|---|---|---|---|---|---|---|---|---|
| 1 | 2A6-15111-03 | CARTER MANIVELA 1 | 1 | | | | | |
| | 18L-15111-01 | CARTER MANIVELA 1 | | 1 | | | | |
| 2 | 2A6-15121-02 | CARTER MANIVELA 2 | 1 | | | | | |
| | 18L-15121-01 | CARTER MANIVELA 2 | | 1 | | | | |
| 3 | 99530-10114 | PASADOR, DE ESPIGA | 1 | 1 | | | | |
| 4 | 99530-20020 | PASADOR, DE ESPIGA | 1 | 1 | | | | |
| 5 | 328-15316-00 | AMORT. MONTANTE MOTOR 1 | 2 | 2 | | | | |
| 6 | 401-15317-00 | SEPARADPR, MONTANTE DE MOTOR | 1 | 1 | | | | |
| 7 | 93210-11073 | ANILLO O | 2 | 2 | | | | |
| 8 | 98507-06050 | TORNILLO DE CABEZA CON PLANA | 5 | 5 | | | | |
| 9 | 98507-06060 | TORNILLO DE CABEZA CON PLANA | 3 | 3 | | | | |
| 10 | 98507-06070 | TORNILLO DE CABEZA CON PLANA | 3 | 3 | | | | |
| 11 | 98507-06075 | TORNILLO DE CABEZA CON PLANA | 1 | 1 | | | | |
| 12 | 2N4-15371-00 | RESPIRADERO | 1 | 1 | | | | |
| 13 | 90445-07340 | TUBO (L310) | 1 | 1 | | | | |
| 14 | 90340-12005 | TORNILLO, DE DRENAJE | 1 | 1 | | | | |
| 15 | 90430-12227 | JUNTA | 1 | 1 | | | | |
| 16 | 304-15128-00 | SOPORTE | 1 | 1 | | | | |
| 17 | 90157-08131 | TORNILLO CABEZA CONICA PLANA | 1 | 1 | | | | |

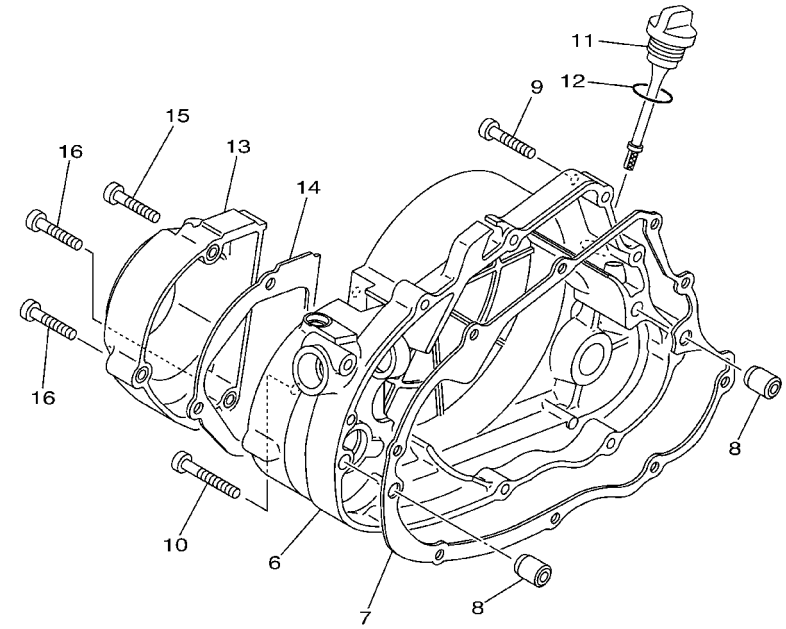


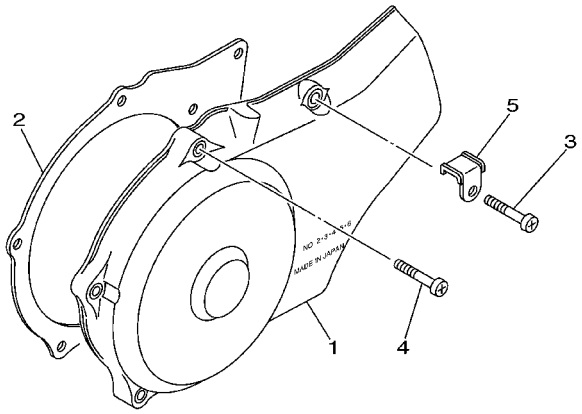


5GP2261-0080

## FIG. 8 CUBIERTA DE CARTER 1

| REF. NO. | CODIGO NO. | DESCRIPCION | 5GP3 | 3TK7 | | | | OBSERVACION |
|---|---|---|---|---|---|---|---|---|
| 1 | 2A7–15411–01 | CUBIERTA DE CARTER 1 | 1 | 1 | | | | |
| 2 | 3TL–E5455–00 | EMPAQUE 1 | 1 | 1 | | | | |
| 3 | 98507–06025 | TORNILLO DE CABEZA CON PLANA | 1 | 1 | | | | |
| 4 | 98507–06025 | TORNILLO DE CABEZA CON PLANA | 5 | 5 | | | | |
| 5 | 2A6–15484–01 | GRAMPA 2 | 1 | 1 | | | | |
| 6 | 18G–15431–01 | CUBIERTA DE CARTER 3 | 1 | 1 | | | | |
| 7 | 18G–15451–03 | EMPAQ DE CUBIERTA DE CARTER | 1 | 1 | | | | |
| 8 | 99530–10114 | PASADOR, DE ESPIGA | 2 | 2 | | | | |
| 9 | 98507–06030 | TORNILLO DE CABEZA CON PLANA | 8 | 8 | | | | |
| 10 | 98507–06040 | TORNILLO DE CABEZA CON PLANA | 1 | 1 | | | | |
| 11 | 18G–15362–00 | TAPON DEL NIVEL DE ACEITE | 1 | 1 | | | | |
| 12 | 93210–21190 | ANILLO O | 1 | 1 | | | | |
| 13 | 18G–15416–00 | CUBIERTA DE BOMBA DE ACEITE | 1 | 1 | | | | |
| 14 | 3TL–E5456–00 | EMPAQ CUBTA.BOMBA ACEITE 1 | 1 | 1 | | | | |
| 15 | 98507–06030 | TORNILLO DE CABEZA CON PLANA | 1 | 1 | | | | |
| 16 | 98507–06030 | TORNILLO DE CABEZA CON PLANA | 2 | 2 | | | | |

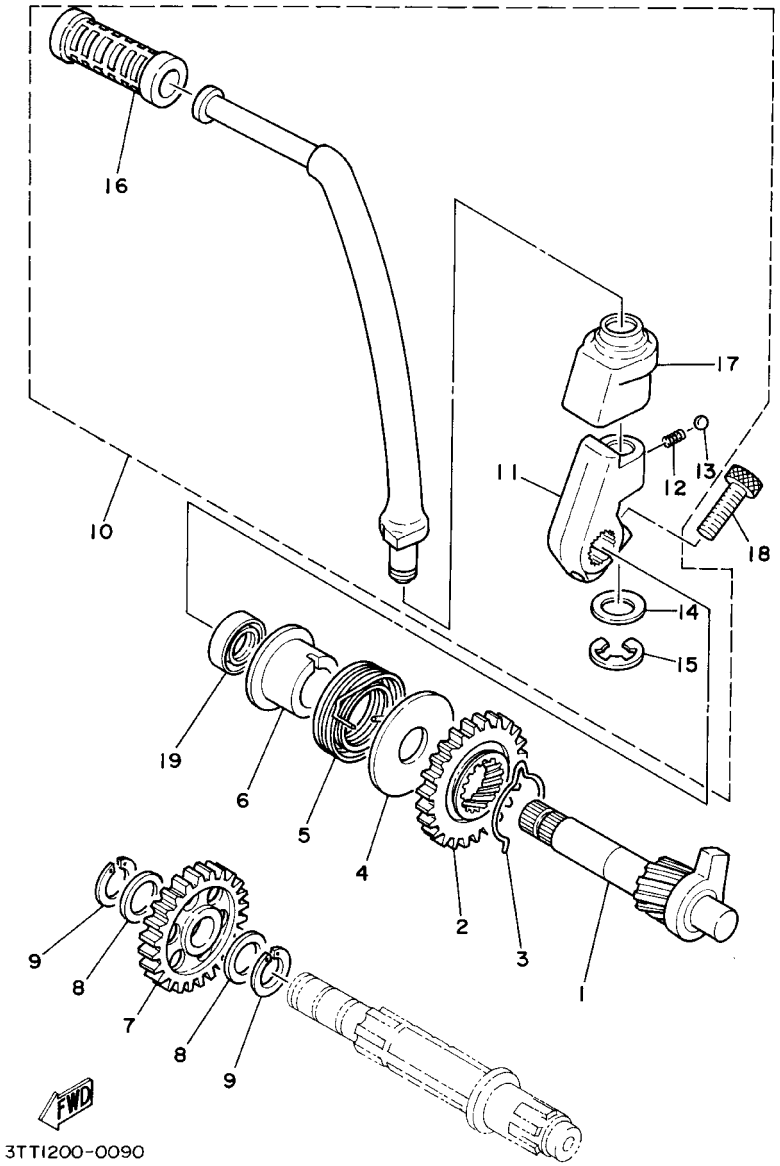


## FIG. 9 ARRANQUE

| REF. NO. | CODIGO NO. | DESCRIPCION | 5GP3 | 3TK7 | | | | OBSERVACION |
|---|---|---|---|---|---|---|---|---|
| 1 | 4F2-15660-01 | EJE DEL PEDAL DE ARRAN.COMPLET | 1 | 1 | | | | |
| 2 | 1W1-15641-00 | ENGRANAJE, PEDAL ARRANQUE (27T) | 1 | 1 | | | | |
| 3 | 90468-26183 | PRESILLA | 1 | 1 | | | | |
| 4 | 401-15676-00 | CUBIERTA DE RESORTE | 1 | 1 | | | | |
| 5 | 90508-26450 | RESORTE DE TORSION | 1 | 1 | | | | |
| 6 | 1W1-15666-00 | SEPARADOR | 1 | 1 | | | | |
| 7 | 525-15651-00 | PINON LIBRE, PEDAL ARRANQUE (25T) | 1 | 1 | | | | |
| 8 | 137-17417-00-05 | ARANDELA DE REGLAJE (T=0.5) | 2 | 2 | | | | |
| 9 | 93440-15012 | BOLA | 2 | 2 | | | | |
| 10 | 5GP-E5620-00 | MANIVELA DE PEDAL COMPLETA | 1 | 1 | | | | |
| 11 | 1W1-15621-01 | .COPA DE MANIVELA DE PEDAL | 1 | 1 | | | | |
| 12 | 90501-10459 | .RESORTE DE COMPRESION | 1 | 1 | | | | |
| 13 | 93503-16003 | .BOLA | 1 | 1 | | | | |
| 14 | 90201-12541 | .ARANDELA PLANA | 1 | 1 | | | | |
| 15 | 93430-08007 | .BOLA | 1 | 1 | | | | |
| 16 | 156-15618-01 | .GOMA PROTECTORA, PEDAL | 1 | 1 | | | | |
| 17 | 1W1-15618-01 | .GOMA PROTECTORA, PEDAL | 1 | 1 | | | | |
| 18 | 91317-08025 | PERNO | 1 | 1 | | | | |
| 19 | 93101-17062 | SELLO ACEITE | 1 | 1 | | | | |

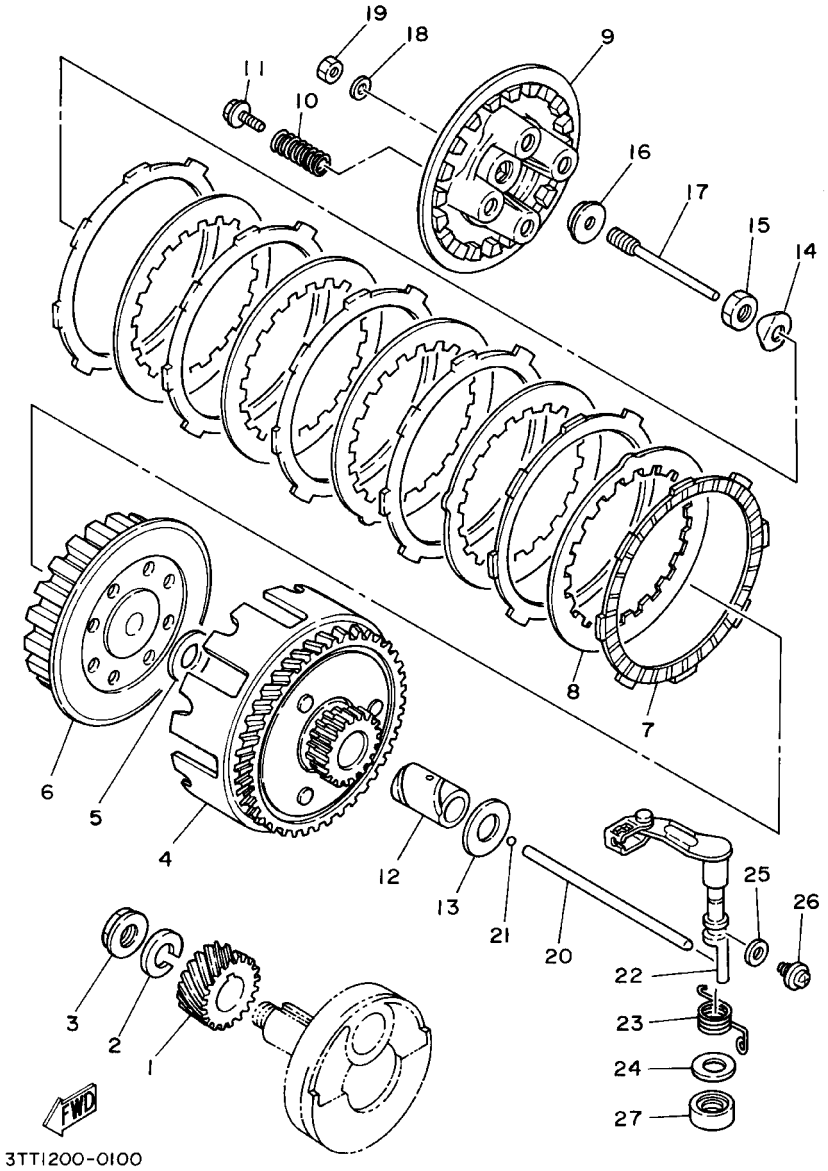


## FIG. 10 EMBRAGUE

| REF. NO. | CODIGO NO. | DESCRIPCION | 5GP3 | 3TK7 | | | | OBSERVACION |
|---|---|---|---|---|---|---|---|---|
| 1 | 2A6-16111-00 | ENGRANAJE TRACC.PRIMARIA (22T) | 1 | | | | | |
| | 2JK-16111-01 | ENGRANAJE TRACC.PRIMARIA (22T) | | 1 | | | | |
| 2 | 90204-12007 | ARANDELA DE RESORTE | 1 | 1 | | | | |
| 3 | 90179-12659 | TUERCA | 1 | 1 | | | | |
| 4 | 3TL-16150-00 | CAMPANA DE EMBRAGUE | 1 | 1 | | | | |
| 5 | 90201-17550 | ARANDELA PLANA | 1 | 1 | | | | |
| 6 | 18G-16371-00 | CUBO, DE EMBRAGUE | 1 | | | | | |
| | 18L-16371-00 | CUBO, DE EMBRAGUE | | 1 | | | | |
| 7 | 598-16321-01 | PLACA DE FRICCION | 6 | 7 | | | | |
| 8 | 1V1-16324-00 | PLACA DE EMBRAGUE | 5 | 6 | | | | |
| 9 | 18G-16351-00 | PLATO DE PRESION | 1 | 1 | | | | |
| 10 | 90501-20568 | RESORTE DE COMPRESION | 4 | 4 | | | | |
| 11 | 90119-05020 | TORNILLO CON ARANDELA | 4 | 4 | | | | |
| 12 | 90560-17147 | SEPARADOR | 1 | 1 | | | | |
| 13 | 90201-17550 | ARANDELA PLANA | 1 | 1 | | | | |
| 14 | 90215-14122 | ARANDELA DE CIERRE | 1 | 1 | | | | |
| 15 | 90170-14171 | TUERCA | 1 | 1 | | | | |
| 16 | 1W1-16358-01 | PLACA DE EMPUJE | 1 | 1 | | | | |
| 17 | 1W1-16356-02 | VARILLA DE EMPUJE 1 | 1 | 1 | | | | |
| 18 | 92907-06200 | ARANDELA | 1 | 1 | | | | |
| 19 | 95307-06600 | TUERCA | 1 | 1 | | | | |
| 20 | 2X3-16357-00 | VARILLA DE EMPUJE 2 | 1 | 1 | | | | |
| 21 | 93503-16003 | BOLA | 1 | 1 | | | | |
| 22 | 18G-16380-02 | LEVA DE EMPUJE COMPLETA | 1 | 1 | | | | |
| 23 | 90508-20345 | RESORTE DE TORSION | 1 | 1 | | | | |
| 24 | 90201-14217 | ARANDELA PLANA | 1 | 1 | | | | |
| 25 | 90430-08216 | JUNTA | 1 | 1 | | | | |

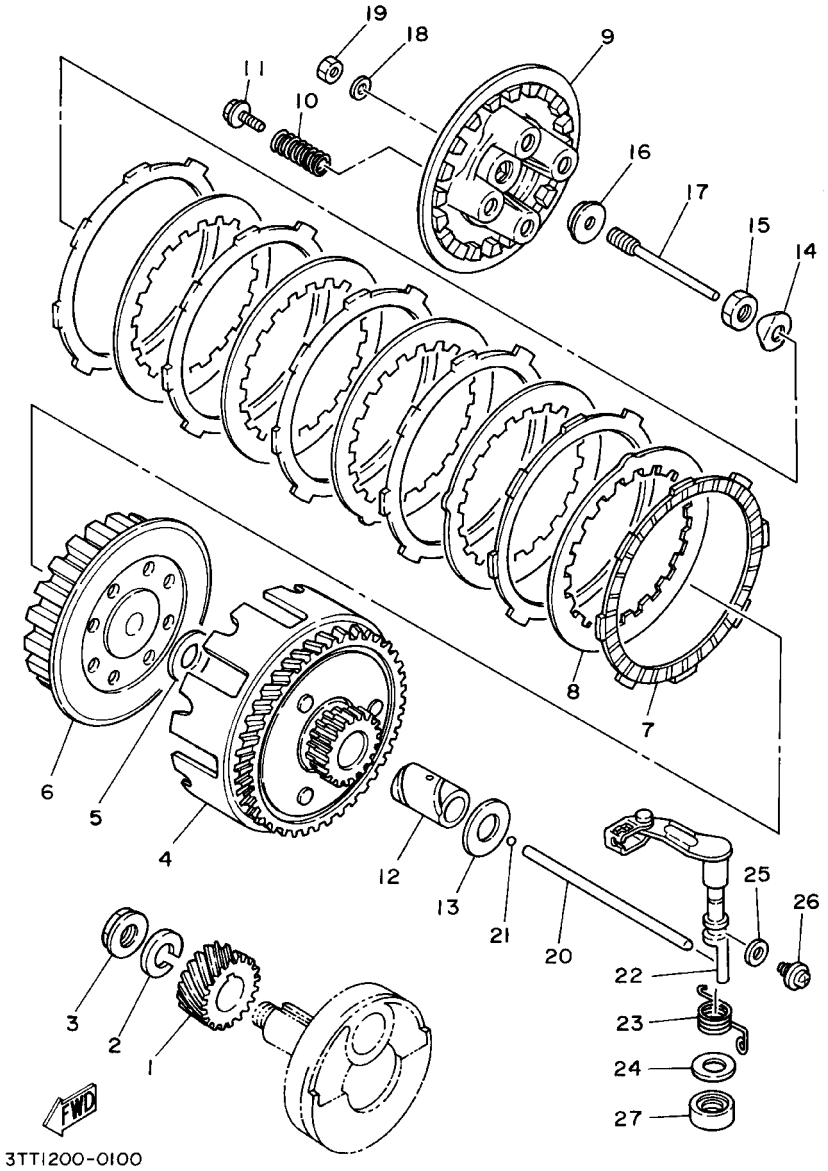


## FIG. 10 EMBRAGUE

| REF. NO. | CODIGO NO. | DESCRIPCION | 5GP3 | 3TK7 | | | | OBSERVACION |
|---|---|---|---|---|---|---|---|---|
| 26 | 90149–08108 | TORNILLO DE REGLAJE | 1 | 1 | | | | |
| 27 | 93104–14004 | SELLO ACEITE | 1 | 1 | | | | |

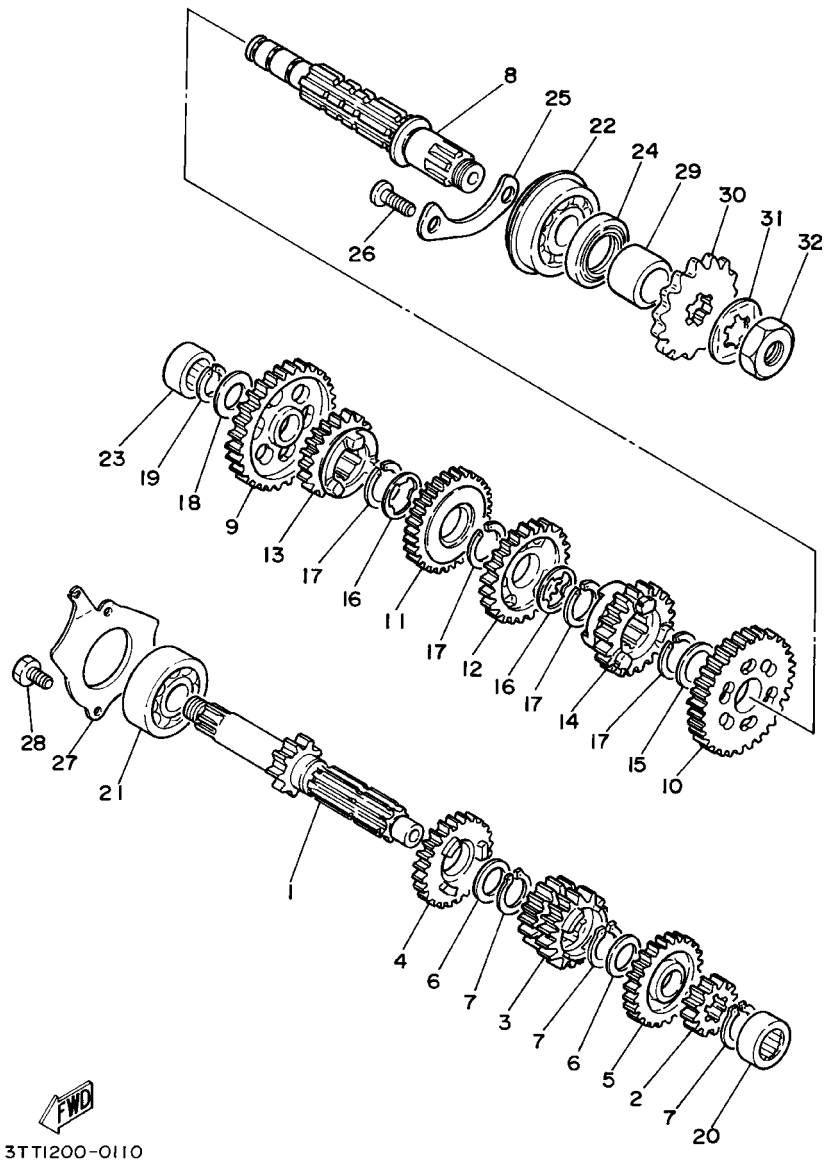


## FIG. 11 TRANSMISION

| REF. NO. | CODIGO NO. | DESCRIPCION | 5GP3 | 3TK7 | | | | OBSERVACION |
|---|---|---|---|---|---|---|---|---|
| 1 | 4J3-17411-00 | EJE PRIMARIO (11T) | 1 | 1 | | | | |
| 2 | 4J3-17121-00 | ENGRANAJE DE PINON DE 2DA (15T) | 1 | 1 | | | | |
| 3 | 4J3-17131-00 | ENGRANAJE PINON DE 3RA/4TA (19/22T) | 1 | 1 | | | | |
| 4 | 4J3-17151-01 | ENGRANAJE PINON DE 5TA (23T) | 1 | 1 | | | | |
| 5 | 4J3-17161-00 | ENGRANAJE PINON 6TA (25T) | 1 | 1 | | | | |
| 6 | 90201-20266 | ARANDELA, PLACA (T=1.0) | 2 | 2 | | | | |
| 7 | 93410-20038 | BOLA | 3 | 3 | | | | |
| 8 | 2A6-17421-00 | EJE SECUNDARIO | 1 | 1 | | | | |
| 9 | 4J3-17211-00 | ENGRANAJE RUEDA DE 1RA (35T) | 1 | 1 | | | | |
| 10 | 4J3-17221-00 | ENGRANAJE RUEDA DE 2DA (29T) | 1 | 1 | | | | |
| 11 | 4J3-17231-00 | ENGRANAJE RUEDA DE 3RA (26T) | 1 | 1 | | | | |
| 12 | 4J3-17241-00 | ENGRANAJE DE RUEDA 4TA (24T) | 1 | 1 | | | | |
| 13 | 4J3-17251-00 | ENGRANAJE RUEDA DE 5TA (22T) | 1 | 1 | | | | |
| 14 | 4J3-17261-00 | ENGRANAJE RUEDA DE 6TA (21T) | 1 | 1 | | | | |
| 15 | 90201-22555 | ARANDELA PLANA | 1 | 1 | | | | |
| 16 | 90209-18135 | ARANDELA DE SEPARACION | 2 | 2 | | | | |
| 17 | 93410-22039 | BOLA | 4 | 4 | | | | |
| 18 | 90201-15700 | ARANDELA PLANA | 1 | 1 | | | | |
| 19 | 93440-15012 | BOLA | 1 | 1 | | | | |
| 20 | 93311-41530 | COJINETE | 1 | 1 | | | | |
| 21 | 93306-30304 | COJINETE (B6303Z) | 1 | 1 | | | | |
| 22 | 93306-30411 | COJINETE (B6304) | 1 | 1 | | | | |
| 23 | 93311-31515 | COJINETE | 1 | 1 | | | | |
| 24 | 93102-26042 | SELLO ACEITE | 1 | 1 | | | | |
| 25 | 1W1-15381-00 | PLACA CUBTA.RESPIRADERO | 1 | 1 | | | | |
| 26 | 98707-06012 | TORNILLO DE CABEZA PLANA | 2 | 2 | | | | |
| 27 | 1W1-17471-01 | PLACA, DE CUBIERTA | 1 | 1 | | | | |

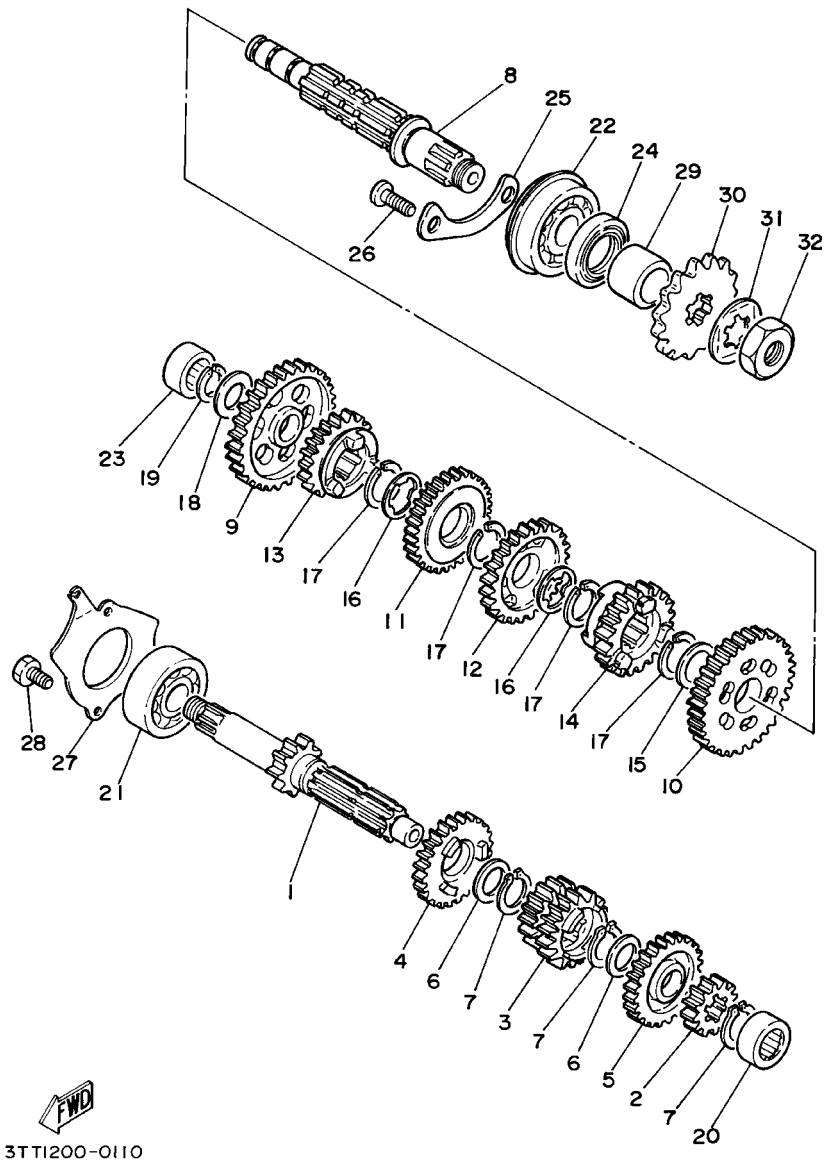


## FIG. 11 TRANSMISION

| REF. NO. | CODIGO NO. | DESCRIPCION | 5GP3 | 3TK7 | | | | OBSERVACION |
|---|---|---|---|---|---|---|---|---|
| 28 | 97027–06012 | PERNO | 2 | 2 | | | | |
| 29 | 90387–202A0 | COLLAR | 1 | 1 | | | | |
| 30 | 93822–15065 | RUEDA DENTADA (15T)(1741746150) | 1 | | | | | |
| | 93822–16093 | RUEDA DENTADA (16T)(1741746160) | | 1 | | | | |
| 31 | 90215–16127 | ARANDELA DE CIERRE | 1 | 1 | | | | |
| 32 | 90179–16226 | TUERCA | 1 | 1 | | | | |

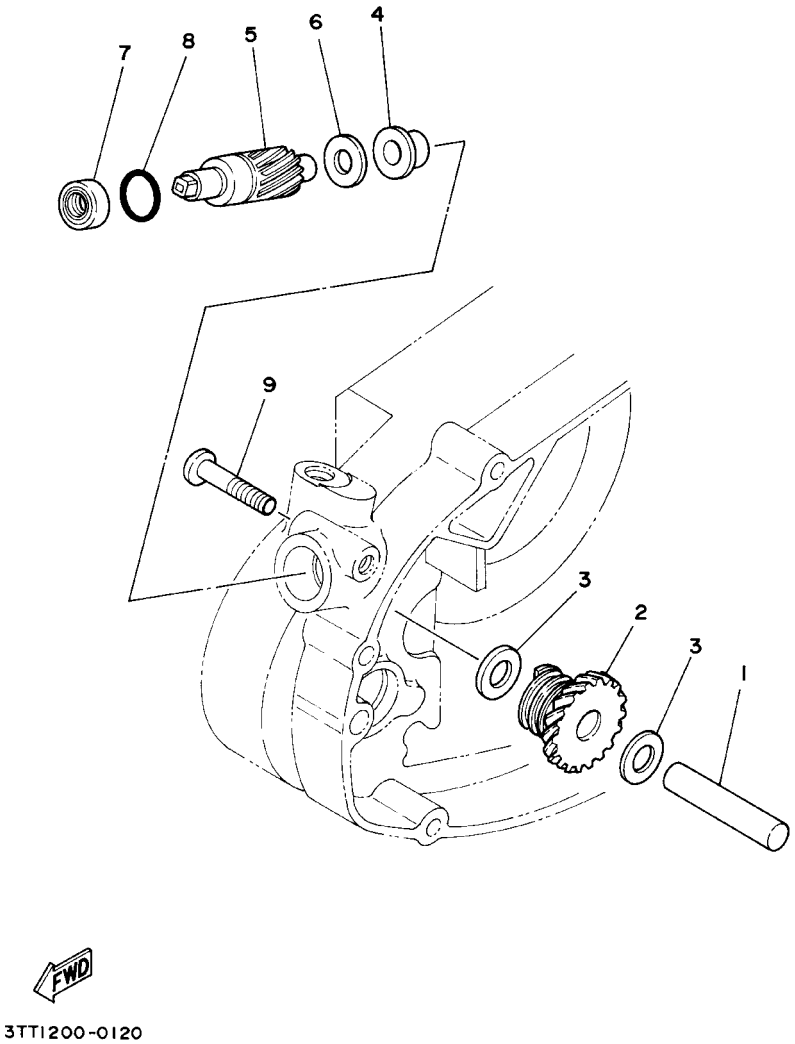


## FIG. 12 ENGR. DE TACOMETRO

| REF. NO. | CODIGO NO. | DESCRIPCION | 5GP3 | 3TK7 | | | | OBSERVACION |
|---|---|---|---|---|---|---|---|---|
| 1 | 248–17861–00 | EJE DE ENGRANAJE DE TRACCION | 1 | 1 | | | | |
| 2 | 2A6–17831–01 | ENGRANAJE DE TRACCION | 1 | 1 | | | | |
| 3 | 90201–10123 | ARANDELA PLANA | 2 | 2 | | | | |
| 4 | 90381–08002 | BUJE SOLIDO | 1 | 1 | | | | |
| 5 | 2A6–17841–00 | ENGRANAJE DE TRACCION (13T) | 1 | 1 | | | | |
| 6 | 90201–12163 | ARANDELA PLANA | 1 | 1 | | | | |
| 7 | 93109–08017 | SELLO ACEITE | 1 | 1 | | | | |
| 8 | 93210–14104 | ANILLO O | 1 | 1 | | | | |
| 9 | 98507–06030 | TORNILLO DE CABEZA CON PLANA | 1 | 1 | | | | |

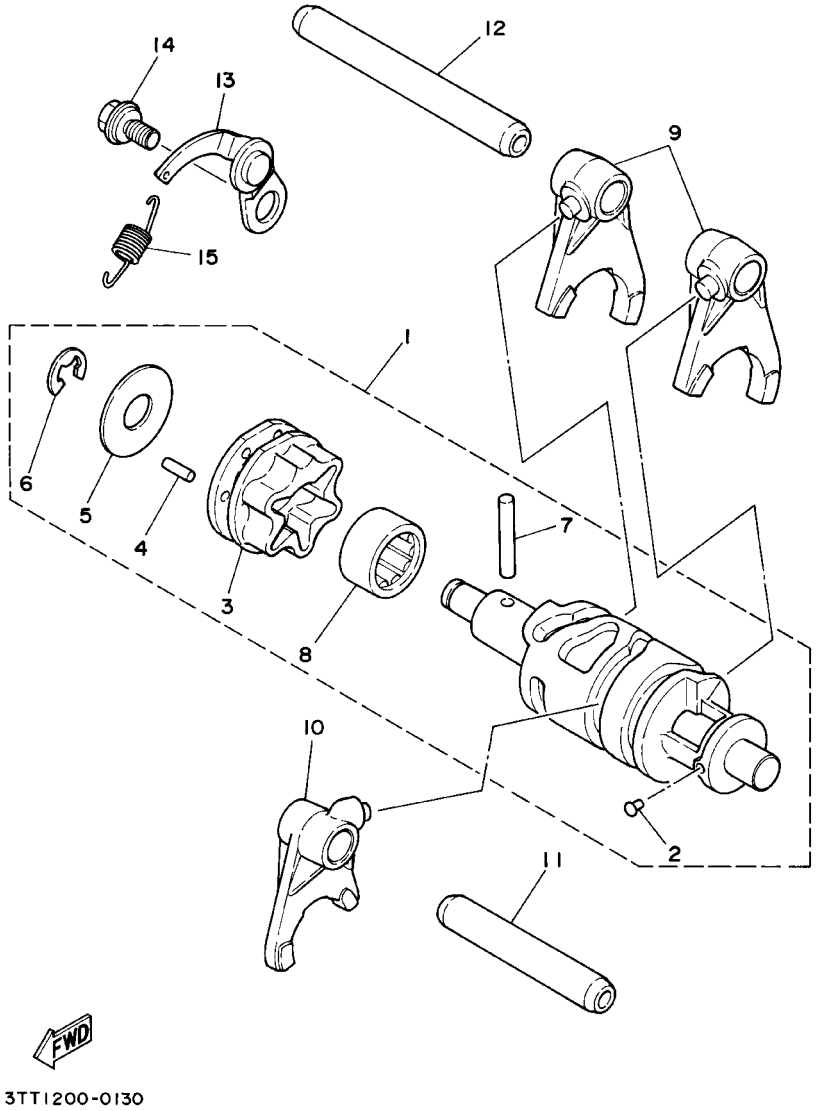


## FIG. 13 LEVA DE CAMBIO. HORQ

| REF. NO. | CODIGO NO. | DESCRIPCION | 5GP3 | 3TK7 | | | | OBSERVACION |
|---|---|---|---|---|---|---|---|---|
| 1 | 1W1–18540–00 | LEVADEL CAMBIO COMPLETA | 1 | 1 | | | | |
| 2 | 136–18542–00 | .PUNTO MVERTO | 1 | 1 | | | | |
| 3 | 1W1–18185–00 | .SEGMENTO DE RETENCION | 1 | 1 | | | | |
| 4 | 93604–12037 | .PASADOR DE CLAVIJA | 6 | 6 | | | | |
| 5 | 1W1–18561–00 | .PLACA LATERAL 1 | 1 | 1 | | | | |
| 6 | 93430–08006 | .BOLA | 1 | 1 | | | | |
| 7 | 93604–30018 | .PASADOR DE CLAVIJA | 1 | 1 | | | | |
| 8 | 93315–21813 | .COJINETE | 1 | 1 | | | | |
| 9 | 2A6–18511–00 | HORQUILLA DEL CAMBIO 1 | 2 | 2 | | | | |
| 10 | 2A6–18512–00 | HORQUILLA DEL CAMBIO 2 | 1 | 1 | | | | |
| 11 | 2A6–18531–00 | BARRA GUIA HORQ. CAMBIO 1 | 1 | 1 | | | | |
| 12 | 2A6–18535–00 | BARRA GUIA HORQ.CAMBIO 2 | 1 | 1 | | | | |
| 13 | 1W1–18140–00 | PALANCA DE TOPE COMPLETA | 1 | 1 | | | | |
| 14 | 90109–063F7 | PERNO | 1 | 1 | | | | |
| 15 | 90506–09156 | RESORTE DE TENSION | 1 | 1 | | | | |

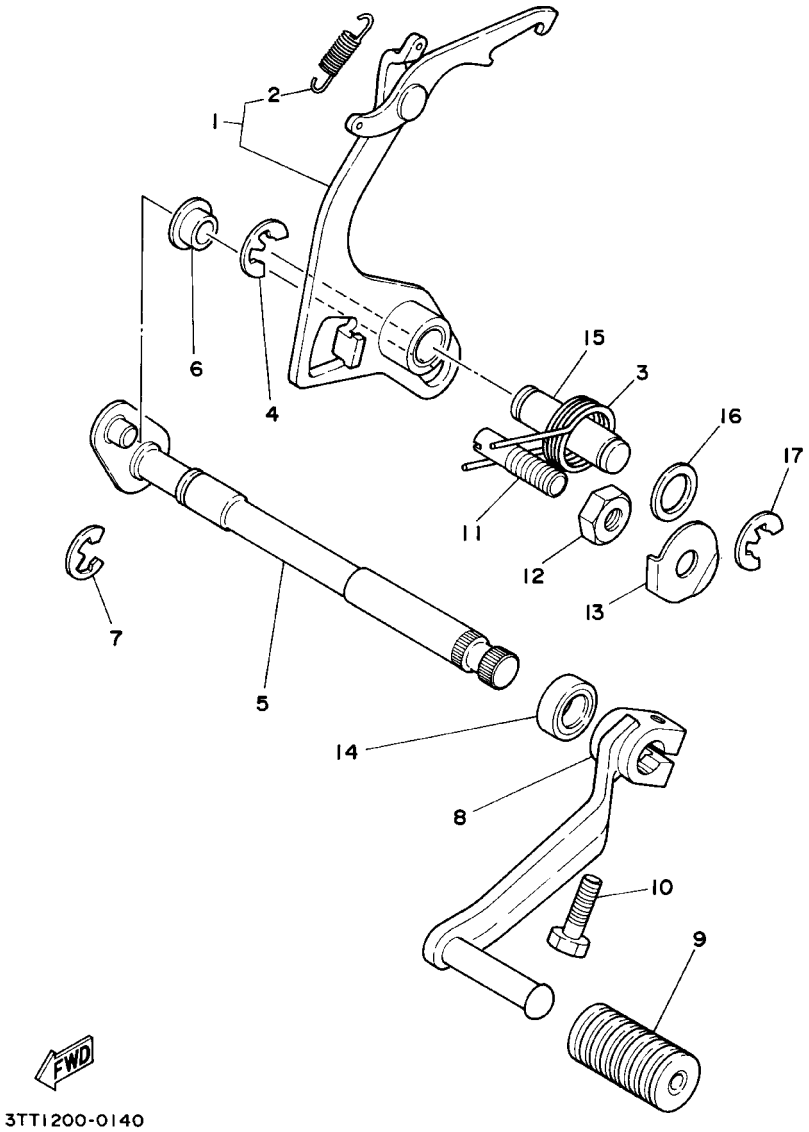


## FIG. 14 EJE DE CAMBIO. PEDAL

| REF. NO. | CODIGO NO. | DESCRIPCION | 5GP3 | 3TK7 | | | | OBSERVACION |
|---|---|---|---|---|---|---|---|---|
| 1 | 4F2–18120–00 | PALANCA DE SELECTOR COMPLETO | 1 | 1 | | | | |
| 2 | 90506–08155 | .RESORTE DE TENSION | 1 | 1 | | | | |
| 3 | 90508–32349 | RESORTE DE TORSION | 1 | 1 | | | | |
| 4 | 99001–10600 | PRESILLA REDONDA | 1 | 1 | | | | |
| 5 | 4F2–18101–02 | EJE SELECTOR COMPLETO | 1 | 1 | | | | |
| 6 | 401–18178–00 | RODILLO DE PALANCA DE CAMBIOS | 1 | 1 | | | | |
| 7 | 99001–10600 | PRESILLA REDONDA | 1 | 1 | | | | |
| 8 | 3TL–E8111–00 | PEDAL DEL CAMBIO | 1 | 1 | | | | |
| 9 | 2E8–E8113–00 | FUNDA DEL PEDAL DEL CAMBIO | 1 | 1 | | | | |
| 10 | 97021–06020 | PERNO | 1 | 1 | | | | |
| 11 | 90149–08111 | TORNILLO DE REGLAJE | 1 | 1 | | | | |
| 12 | 90170–08029 | TUERCA | 1 | 1 | | | | |
| 13 | 90215–08014 | ARANDELA DE CIERRE | 1 | 1 | | | | |
| 14 | 93101–12173 | SELLO ACEITE | 1 | 1 | | | | |
| 15 | 1W1–18197–01 | EJE | 1 | 1 | | | | |
| 16 | 90201–12163 | ARANDELA PLANA | 1 | 1 | | | | |
| 17 | 99001–10600 | PRESILLA REDONDA | 1 | 1 | | | | |

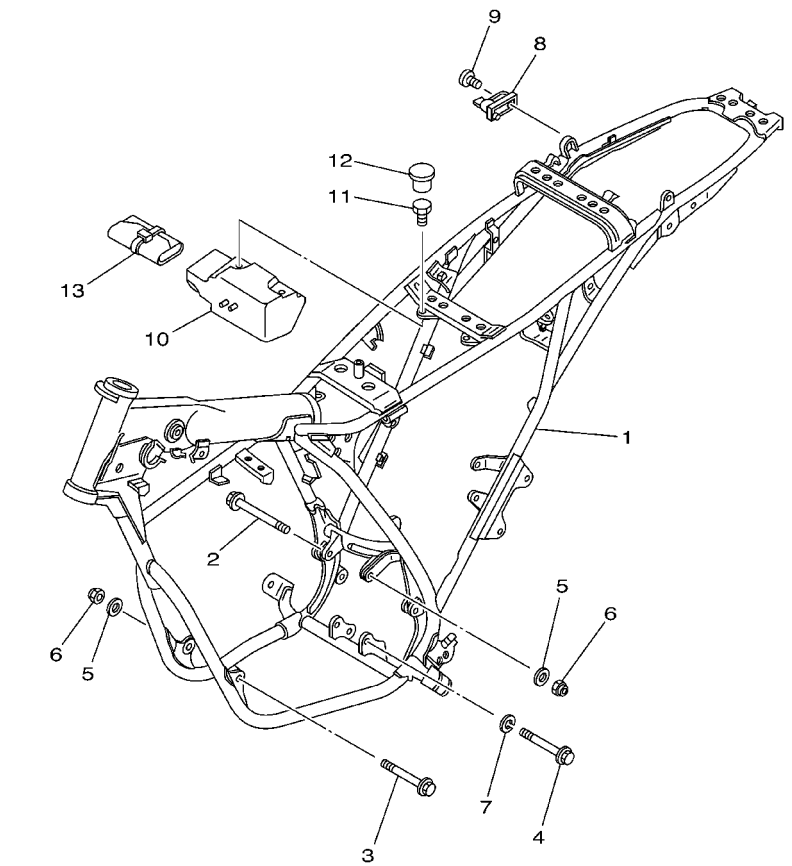


5GP2261-0150

## FIG. 15 CUADRO

| REF. NO. | CODIGO NO. | DESCRIPCION | 5GP3 | 3TK7 | | | | OBSERVACION |
|---|---|---|---|---|---|---|---|---|
| 1 | 3TL–F1110–21–33 | ARMAZON COMPLETO | 1 | 1 | | | | UR YB PARA SW, VRC7,CM3 |
| | 3TL–F1110–21–P0 | ARMAZON COMPLETO | 1 | 1 | | | | UR DPBMC |
| 2 | 90105–08099 | TORNILLO | 1 | 1 | | | | |
| 3 | 90105–08120 | TORNILLO | 1 | 1 | | | | |
| 4 | 90105–10037 | TORNILLO | 1 | 1 | | | | |
| 5 | 92907–08200 | ARANDELA | 2 | 2 | | | | |
| 6 | 90185–08089 | TUERCA AUTOBLOCANTE | 2 | 2 | | | | |
| 7 | 92907–10100 | ARANDELA | 1 | 1 | | | | |
| 8 | 5H0–21308–01 | PORTACASCO COMPLETO | 1 | 1 | | | | |
| 9 | 98707–06020 | TORNILLO DE CABEZA PLANA | 1 | 1 | | | | |
| 10 | 3TL–F1107–00 | CAJA DE HERRAMIENTAS COMPL. | 1 | 1 | | | | |
| 11 | 90101–06529 | TORNILLO | 2 | 2 | | | | |
| 12 | 90338–18122 | TAPON | 2 | 2 | | | | |
| 13 | 3TL–F8100–10 | JUEGO DE HERRAMIENTAS | 1 | 1 | | | | |

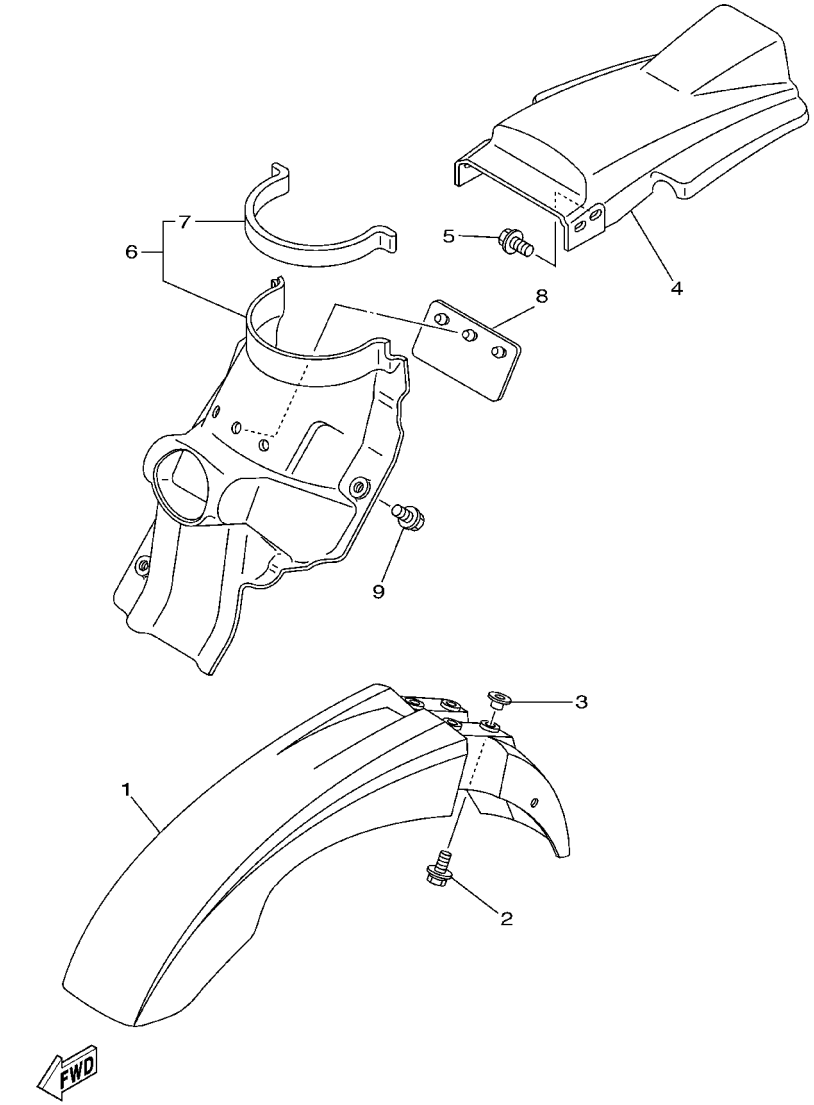


## FIG. 16 GUARDABARRO

| REF. NO. | CODIGO NO. | DESCRIPCION | 5GP3 | 3TK7 | | | | OBSERVACION |
|---|---|---|---|---|---|---|---|---|
| 1 | 4BE–21511–00 | GUARDABARRO DELANTERO | 1 | 1 | | | | UR PWS1 PARA SW, VRC7 |
| | 4BE–21511–20 | GUARDABARRO DELANTERO | 1 | 1 | | | | UR YB PARA CM3 |
| | 4BE–21511–10 | GUARDABARRO DELANTERO | 1 | 1 | | | | UR DPBSE PARA DPBMC |
| 2 | 90119–06063 | TORNILLO CON ARANDELA | 4 | 4 | | | | |
| 3 | 90387–06681 | COLLAR | 4 | 4 | | | | |
| 4 | 37N–21611–20 | GUARDABARRO TRASERO | 1 | 1 | | | | UR YB PARA SW,CM3 |
| | 37N–21611–50 | GUARDABARRO TRASERO | 1 | 1 | | | | UR PWS1 PARA VRC7, DPBMC |
| 5 | 90119–06044 | TORNILLO CON ARANDELA | 4 | 4 | | | | |
| 6 | 18G–21620–20 | GUARDAFANGO COMPLETO | 1 | 1 | | | | |
| 7 | 2A6–21639–00 | .AMORTIGUADOR 2 | 1 | 1 | | | | |
| 8 | 3TL–F1621–00 | CHARNELA | 1 | 1 | | | | |
| 9 | 90119–06044 | TORNILLO CON ARANDELA | 3 | 3 | | | | |

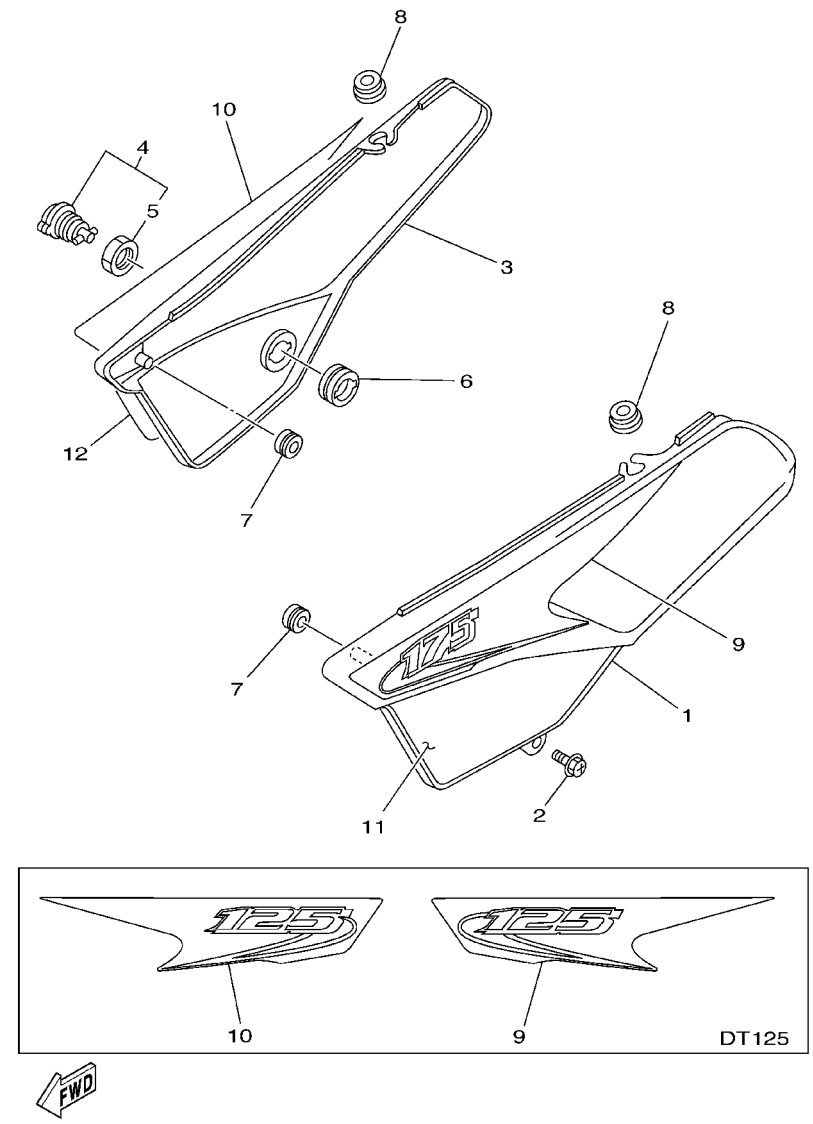


## FIG. 17 CUBIERTA LATERAL

| REF. NO. | CODIGO NO. | DESCRIPCION | 5GP3 | 3TK7 | | | | OBSERVACION |
|---|---|---|---|---|---|---|---|---|
| 1 | 18G–21711–20 | JUEGO DE GRAFICOS 1 | 1 | 1 | | | | UR YB PARA SW,CM3 |
| | 18G–21711–10 | JUEGO DE GRAFICOS 1 | 1 | 1 | | | | UR PWS1 PARA VRC7, DPBMC |
| 2 | 90159–06013 | TORNILLO CON VALONA | 1 | 1 | | | | |
| 3 | 18G–21721–20 | JUEGO DE GRAFICOS 2 | 1 | 1 | | | | UR YB PARA SW,CM3 |
| | 18G–21721–10 | JUEGO DE GRAFICOS 2 | 1 | 1 | | | | UR PWS1 PARA VRC7, DPBMC |
| 4 | 3TL–21708–00 | CUBIERTA 2 | 1 | 1 | | | | |
| 5 | 90480–24186 | .TAPON | 1 | 1 | | | | |
| 6 | 90170–22187 | TUERCA | 1 | 1 | | | | |
| 7 | 90480–12053 | TAPON | 2 | 2 | | | | |
| 8 | 90480–13197 | TAPON | 2 | 2 | | | | |
| 9 | 3TT–F173E–A0 | GRAFICO 1 | 1 | | | | | UR PARA SW |
| | 3TS–F173E–A0 | GRAFICO 1 | | 1 | | | | UR PARA SW |
| | 3TT–F173E–B0 | GRAFICO 1 | 1 | | | | | UR PARA VRC7 |
| | 3TS–F173E–B0 | GRAFICO 1 | | 1 | | | | UR PARA VRC7 |
| | 3TT–F173E–C0 | GRAFICO 1 | 1 | | | | | UR PARA CM3 |
| | 3TS–F173E–C0 | GRAFICO 1 | | 1 | | | | UR PARA CM3 |
| | 3TT–F173E–D0 | GRAFICO 1 | 1 | | | | | UR PARA DPBMC |
| | 3TS–F173E–D0 | GRAFICO 1 | | 1 | | | | UR PARA DPBMC |
| 10 | 3TT–F173F–A0 | GRAFICO | 1 | | | | | UR PARA SW |
| | 3TS–F173F–A0 | GRAFICO | | 1 | | | | UR PARA SW |
| | 3TT–F173F–B0 | GRAFICO | 1 | | | | | UR PARA VRC7 |
| | 3TS–F173F–B0 | GRAFICO | | 1 | | | | UR PARA VRC7 |
| | 3TT–F173F–C0 | GRAFICO | 1 | | | | | UR PARA CM3 |
| | 3TS–F173F–C0 | GRAFICO | | 1 | | | | UR PARA CM3 |
| | 3TT–F173F–D0 | GRAFICO | 1 | | | | | UR PARA DPBMC |
| | 3TS–F173F–D0 | GRAFICO | | 1 | | | | UR PARA DPBMC |
| 11 | 3TT–2174G–00 | GRAFICO 3 | 1 | 1 | | | | PARA VRC7,DPBMC |

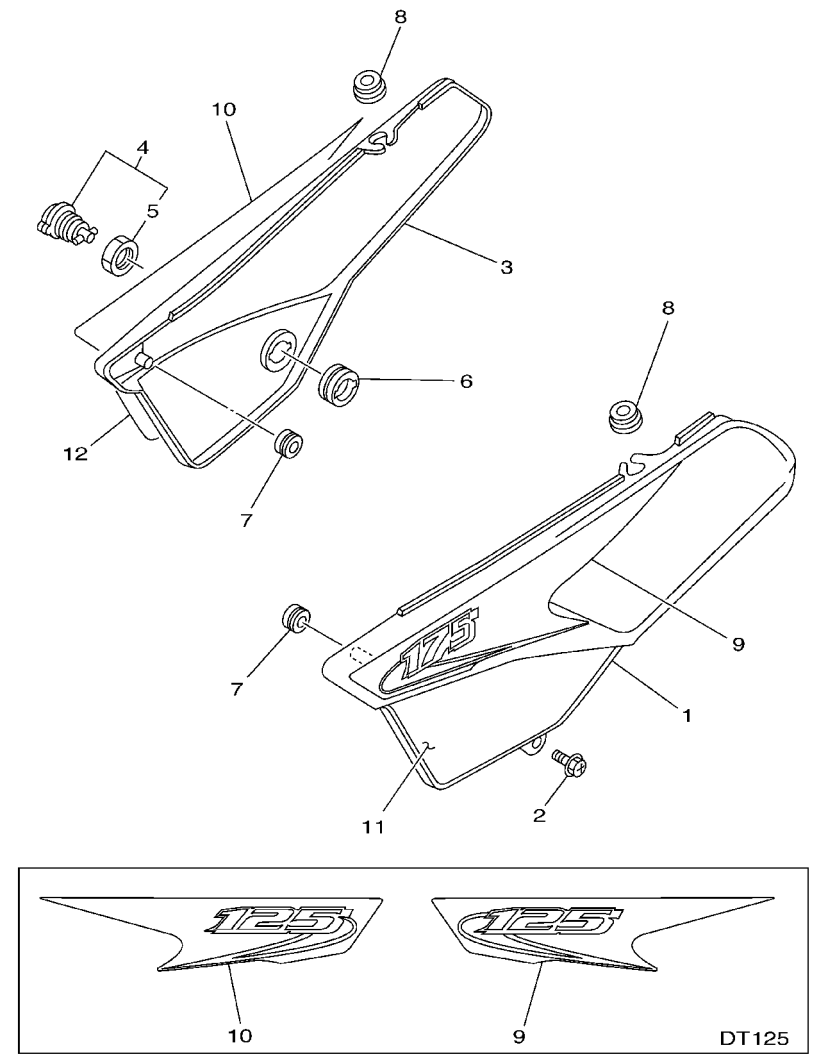


5GP3261-A170

## FIG. 17 CUBIERTA LATERAL

| REF. NO. | CODIGO NO. | DESCRIPCION | 5GP3 | 3TK7 | | | | OBSERVACION |
|---|---|---|---|---|---|---|---|---|
| 12 | 3TT–2174H–00 | CALCO 4 | 1 | 1 | | | | PARA VRC7,DPBMC |

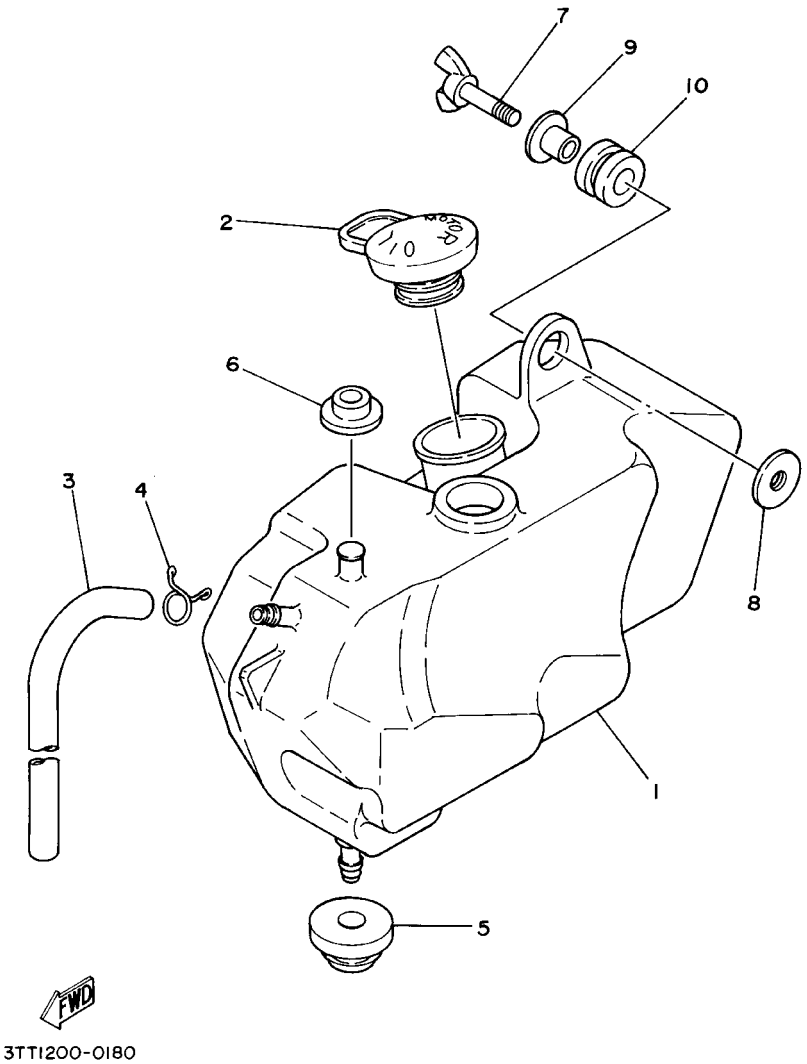


## FIG. 18 DEPOSITO DE ACEITE

| REF. NO. | CODIGO NO. | DESCRIPCION | 5GP3 | 3TK7 | | | | OBSERVACION |
|---|---|---|---|---|---|---|---|---|
| 1 | 3TL–F1751–00 | DEPOSITO DE ACEITE | 1 | 1 | | | | |
| 2 | 3TL–F1771–00 | TAPON DEPOSITO ACEITE | 1 | 1 | | | | |
| 3 | 90445–083J7 | TUBO (L485) | 1 | 1 | | | | |
| 4 | 90467–08075 | PRESILLA | 1 | 1 | | | | |
| 5 | 90480–18171 | TAPON | 1 | 1 | | | | |
| 6 | 90480–13253 | TAPON | 1 | 1 | | | | |
| 7 | 90122–06001 | PERNO MARIPOSA | 1 | 1 | | | | |
| 8 | 90179–06013 | TUERCA | 1 | 1 | | | | |
| 9 | 90387–07391 | COLLAR | 1 | 1 | | | | |
| 10 | 90480–14102 | TAPON | 1 | 1 | | | | |

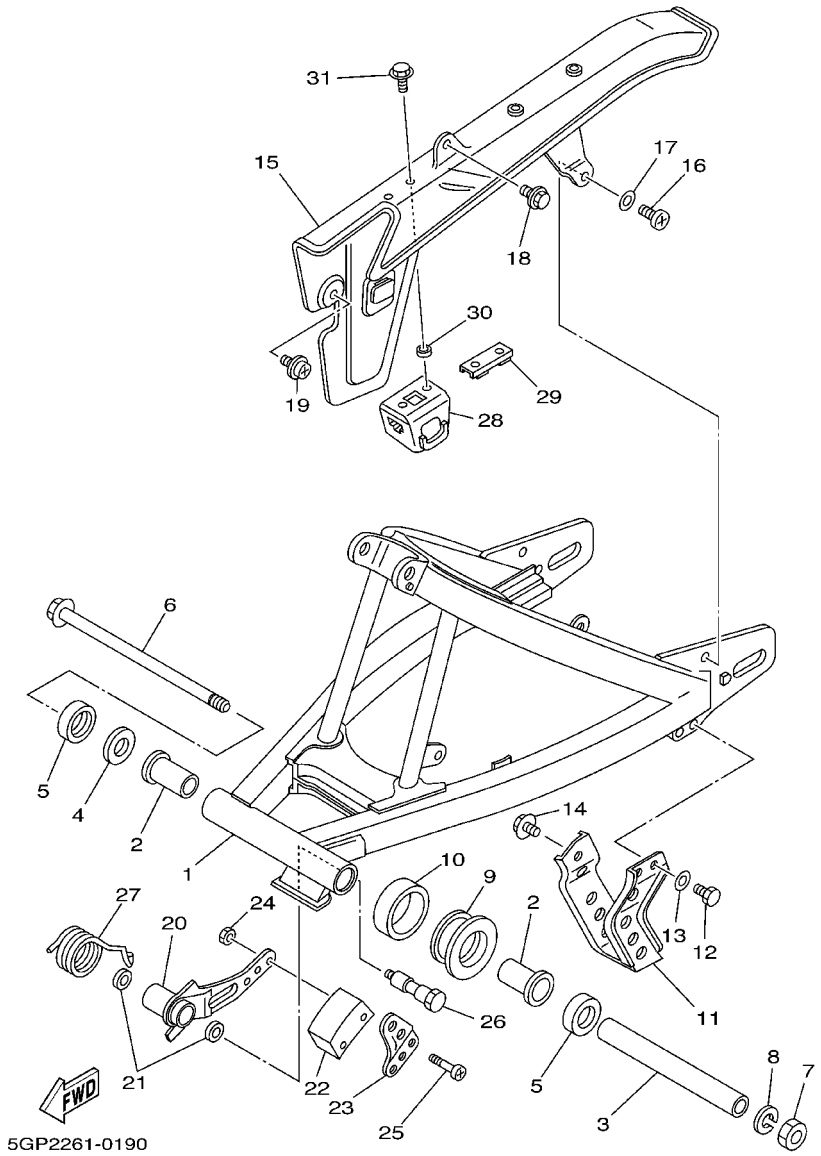


## FIG. 19 BRAZO TRASERO

| REF. NO. | CODIGO NO. | DESCRIPCION | 5GP3 | 3TK7 | | | | OBSERVACION |
|---|---|---|---|---|---|---|---|---|
| 1 | 3TK–F2110–10 | BRAZO TRASERO COMPLETO | 1 | 1 | | | | |
| 2 | 90386–18028 | BUJE | 2 | 2 | | | | |
| 3 | 18G–22124–00 | BUJE 2 | 1 | 1 | | | | |
| 4 | 401–22127–00 | CUNA | 1 | | | | | UN |
| 5 | 401–22128–01 | TAPA DE EMPIJE 1 | 2 | 2 | | | | |
| 6 | 3TL–F2141–00 | EJE DEL BARCULANTE | 1 | 1 | | | | |
| 7 | 90185–12046 | TUERCA AUTOBLOCANTE | 1 | 1 | | | | |
| 8 | 92907–12100 | ARANDELA | 1 | 1 | | | | |
| 9 | 3TL–F2151–00 | SELLO DE GUARDA | 1 | 1 | | | | |
| 10 | 3TL–F2152–00 | SELLO DE GUARDA | 1 | 1 | | | | |
| 11 | 3TL–F2318–00 | GUARDACADENA | 1 | 1 | | | | |
| 12 | 97007–06016 | PERNO | 2 | 2 | | | | |
| 13 | 92907–06600 | ARANDELA | 2 | 2 | | | | |
| 14 | 95807–08012 | TUERCA DE REBORDE | 1 | 1 | | | | |
| 15 | 4F2–22311–01 | CABRECADENA | 1 | 1 | | | | |
| 16 | 98507–05016 | TORNILLO DE CABEZA CON PLANA | 1 | 1 | | | | |
| 17 | 92907–05600 | ARANDELA | 1 | 1 | | | | |
| 18 | 90119–05059 | TORNILLO CON ARANDELA | 1 | 1 | | | | |
| 19 | 90159–05018 | TORNILLO CON VALONA | 1 | 1 | | | | |
| 20 | 3TL–F2179–00 | BRAZO DE TENSOR | 1 | 1 | | | | |
| 21 | 93109–14021 | SELLO ACEITE | 2 | 2 | | | | |
| 22 | 3TL–F2178–00 | TENSOR | 1 | 1 | | | | |
| 23 | 3TL–F2187–00 | GUIA DE CADENA | 1 | 1 | | | | |
| 24 | 95307–05700 | TUERCA | 2 | 2 | | | | |
| 25 | 98507–05035 | TORNILLO DE CABEZA CON PLANA | 2 | 2 | | | | |
| 26 | 90109–10533 | PERNO | 1 | 1 | | | | |
| 27 | 90508–35350 | RESORTE DE TORSION | 1 | 1 | | | | |

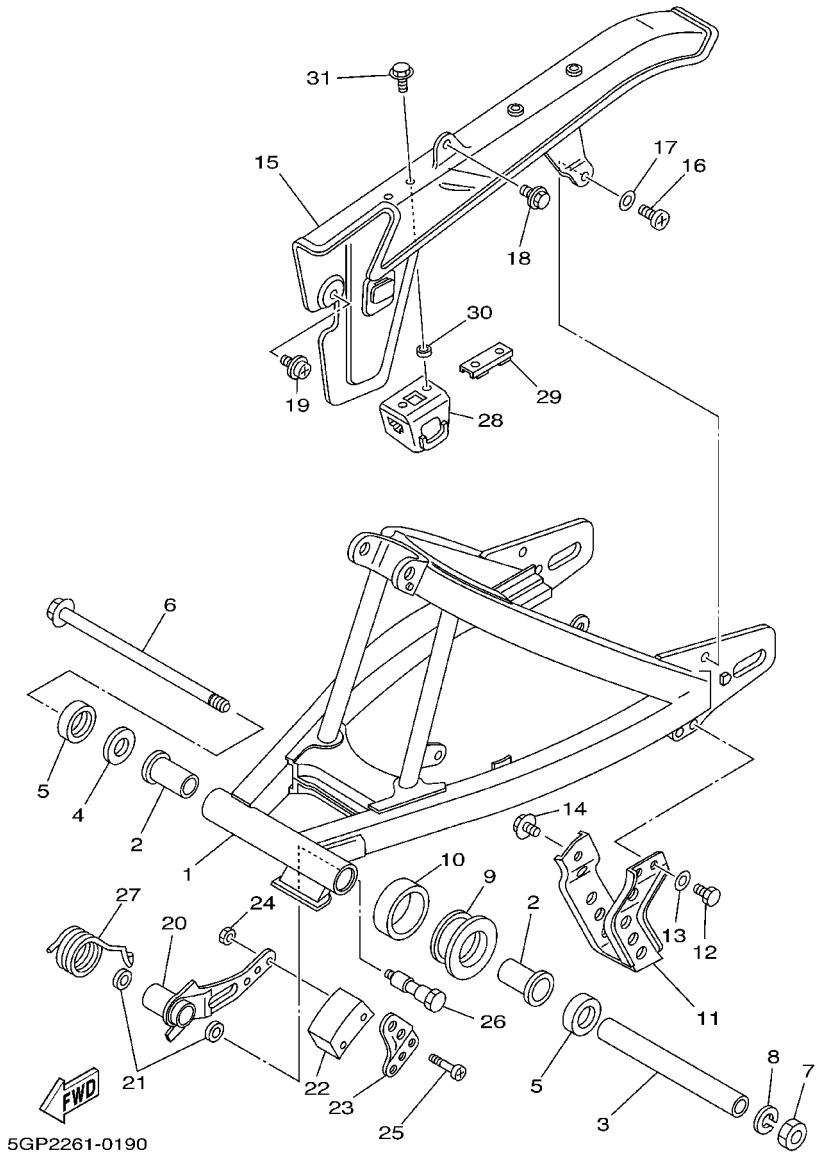


## FIG. 19 BRAZO TRASERO

| REF. NO. | CODIGO NO. | DESCRIPCION | 5GP3 | 3TK7 | | | | OBSERVACION |
|---|---|---|---|---|---|---|---|---|
| 28 | 3TL–F2147–00 | PROTECTOR DE CADENA | 1 | 1 | | | | |
| 29 | 3TL–F2131–00 | SOPORTE DE CAJA DE CADENA 2 | 1 | 1 | | | | |
| 30 | 90387–05682 | COLLAR | 2 | 2 | | | | |
| 31 | 90119–05193 | TORNILLO CON ARANDELA | 2 | 2 | | | | |

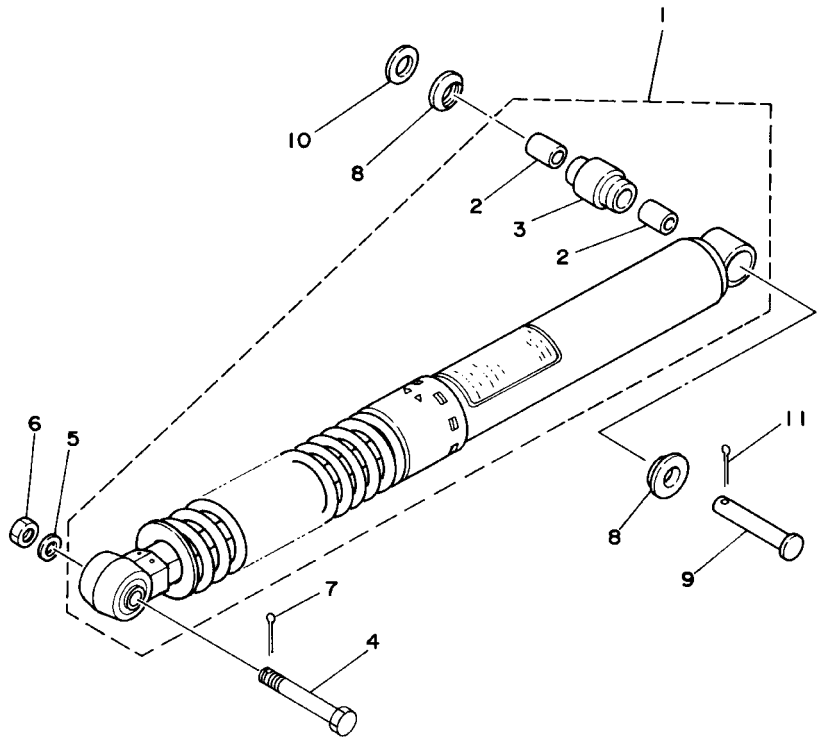

3TT3200-4200

## FIG. 20 SUSPENSION TRASERO

| REF. NO. | CODIGO NO. | DESCRIPCION | 5GP3 | 3TK7 | | | | OBSERVACION |
|---|---|---|---|---|---|---|---|---|
| 1 | 18G–22210–02 | AMORTIGUADOR TRASERO COMPLETO | 1 | 1 | | | | |
| 2 | 90380–12051 | .CASQUILLO SOLIDO | 2 | 2 | | | | |
| 3 | 3R4–22226–00 | .BUJE DE AMORTIGUADOR INFERIO | 1 | 1 | | | | |
| 4 | 90109–10453 | PERNO | 1 | 1 | | | | |
| 5 | 92907–10200 | ARANDELA | 1 | 1 | | | | |
| 6 | 95307–10700 | TUERCA | 1 | 1 | | | | |
| 7 | 91401–20025 | PASADOR DE CHAVETA | 1 | 1 | | | | |
| 8 | 1W1–22128–00 | TAPA DE EMPIJE 1 | 2 | 2 | | | | |
| 9 | 90240–12092 | PASADOR CON HOYO | 1 | 1 | | | | |
| 10 | 92907–12600 | ARANDELA | 1 | 1 | | | | |
| 11 | 91401–25020 | PASADOR DE CHAVETA | 1 | 1 | | | | |

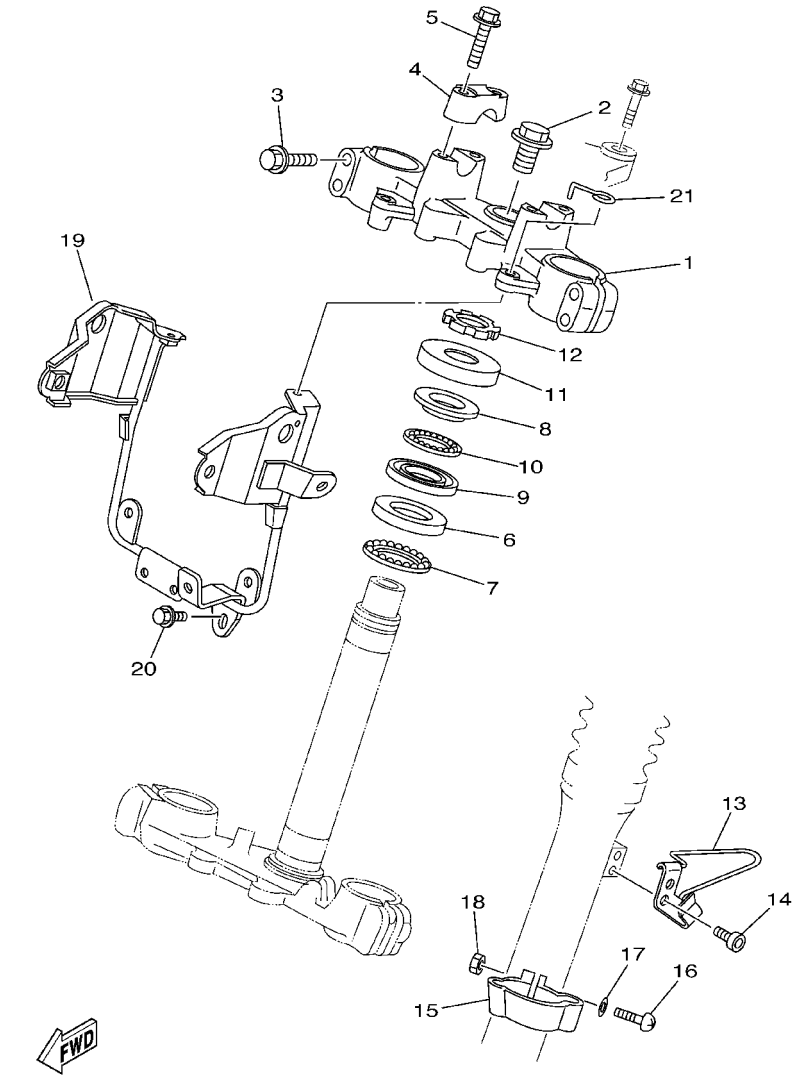


3FJE700-A210

## FIG. 21 DIRECCION

| REF. NO. | CODIGO NO. | DESCRIPCION | 5GP3 | 3TK7 | | | | OBSERVACION |
|---|---|---|---|---|---|---|---|---|
| 1 | 3TS–23435–00 | PLATINA SUPERIOR | 1 | 1 | | | | |
| 2 | 90105–14220 | TORNILLO | 1 | 1 | | | | |
| 3 | 95027–08040 | PERNO, DE BRIDA | 4 | 4 | | | | |
| 4 | 1E6–23441–10–98 | SOPORTE DE MANUBRIO | 2 | 2 | | | | LGB |
| 5 | 95827–08035 | TUERCA DE REBORDE | 4 | 4 | | | | |
| 6 | 156–23412–00 | PISTA DE BOLAS 2 | 1 | 1 | | | | |
| 7 | 156–2341E–00 | BUTTE DE ROULEMENT | 1 | 1 | | | | |
| 8 | 22F–23411–01 | PISTA DE BOLAS 1 | 1 | 1 | | | | |
| 9 | 22F–23412–01 | PISTA DE BOLAS 2 | 1 | 1 | | | | |
| 10 | 22F–2341E–00 | BUTTE DE ROULEMENT | 1 | 1 | | | | |
| 11 | 583–23416–01 | CUBIERTA DE BASE DE BOLA 2 | 1 | 1 | | | | |
| 12 | 90179–25033 | TUERCA | 1 | 1 | | | | |
| 13 | 34X–25876–00 | SOPORTE DE MANGUERA FRENO 2 | 1 | 1 | | | | |
| 14 | 91317–06010 | PERNO | 2 | 2 | | | | |
| 15 | 34X–23317–00 | SOSTEN DE CABLE | 1 | 1 | | | | |
| 16 | 98507–05018 | TORNILLO DE CABEZA CON PLANA | 1 | 1 | | | | |
| 17 | 92907–05600 | ARANDELA | 1 | 1 | | | | |
| 18 | 95307–05600 | TUERCA | 1 | 1 | | | | |
| 19 | 5GP–F3174–00 | SOPORTE DEL FARO DELANTERO | 1 | 1 | | | | |
| 20 | 95807–06010 | TUERCA DE REBORDE | 1 | 1 | | | | |
| 21 | 18G–2331E–00 | GUIA DE CABLE | 1 | 1 | | | | |

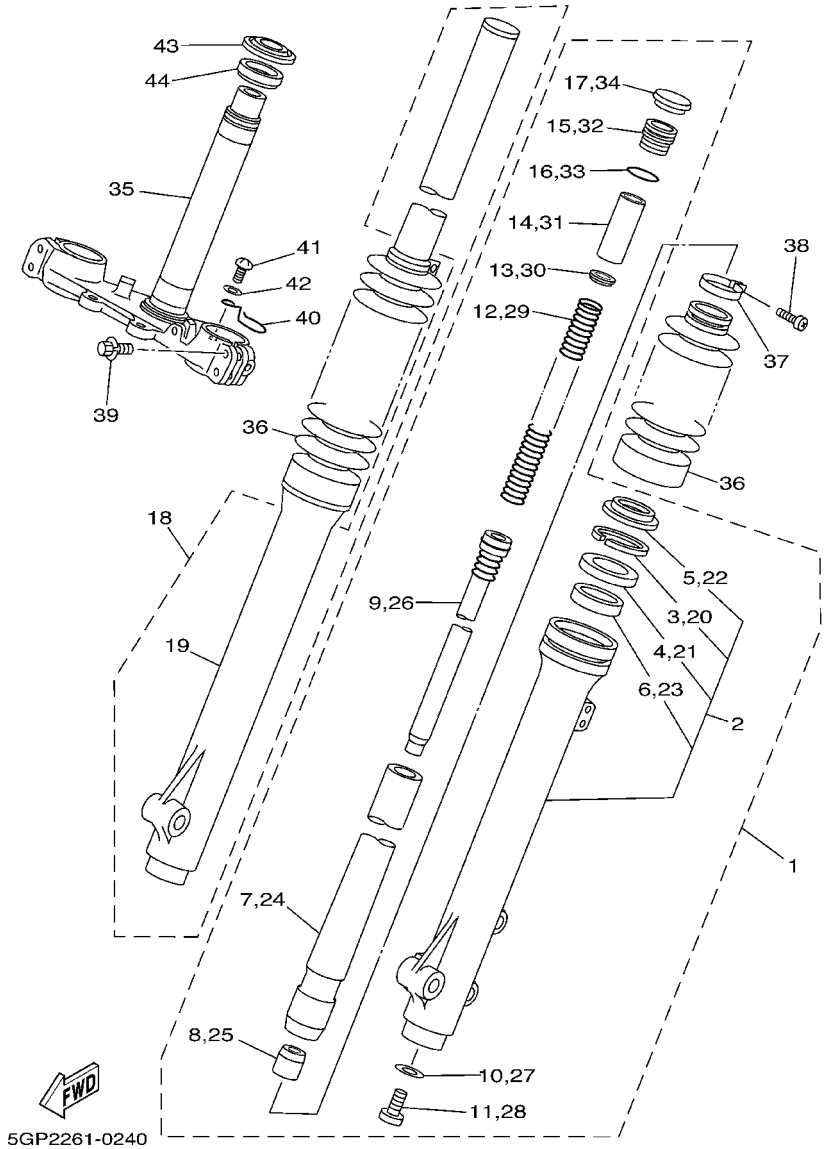


## FIG. 22 HORQUILLA DELANTERA

| REF. NO. | CODIGO NO. | DESCRIPCION | 5GP3 | 3TK7 | | | | OBSERVACION |
|---|---|---|---|---|---|---|---|---|
| 1 | 3TS–23102–00 | HORQUILLA DELANTERA COMPL.(MI) | 1 | 1 | | | | |
| 2 | 3TS–23106–00 | .TUBO EXTERIOR COMPLETO 1 | 1 | 1 | | | | |
| 3 | 4A1–23156–00 | ..PRESILLA DEL RETEN DE ACEITE | 1 | 1 | | | | |
| 4 | 1T3–23145–00 | ..RETEN DE ACEITE | 1 | 1 | | | | |
| 5 | 3R2–23144–00 | ..GUARDAPOLVO | 1 | 1 | | | | |
| 6 | 1H3–23125–00 | ..METAL CORREDIZO 1 | 1 | 1 | | | | |
| 7 | 18G–23110–00 | .TUBO INTERIOR COMPLETO 1 | 1 | 1 | | | | |
| 8 | 1W1–23173–L0 | .VASTAGO AHUSADO | 1 | 1 | | | | |
| 9 | 18G–23170–00 | .CILINDRO COMPL DE HORQ DELAN | 1 | 1 | | | | |
| 10 | 509–23158–L0 | .EMPAQUE | 1 | 1 | | | | |
| 11 | 278–23181–50 | .TORNILLO CABEZAHEXAGONAL | 1 | 1 | | | | |
| 12 | 18G–23141–00 | .RESORTE HORQUILLA DELANT. | 1 | 1 | | | | |
| 13 | 3DM–23149–10 | .ARANDELA DE RESORTE SUPERIOR | 1 | 1 | | | | |
| 14 | 5N8–23118–00 | .SEPARADOR | 1 | 1 | | | | |
| 15 | 1U6–23111–M1 | .TAPON | 1 | 1 | | | | |
| 16 | 240–23114–00 | .EMPAQUE | 1 | 1 | | | | |
| 17 | 1U6–23168–M0 | .TAPA DE HORQUILLA DELANTERA | 1 | 1 | | | | |
| 18 | 3TS–23103–00 | HORQUILLA DELANTERA COMPL.(MD) | 1 | 1 | | | | |
| 19 | 3TS–23107–00 | .TUBO EXTERIOR COMPLETO 2 | 1 | 1 | | | | |
| 20 | 4A1–23156–00 | ..PRESILLA DEL RETEN DE ACEITE | 1 | 1 | | | | |
| 21 | 1T3–23145–00 | ..RETEN DE ACEITE | 1 | 1 | | | | |
| 22 | 3R2–23144–00 | ..GUARDAPOLVO | 1 | 1 | | | | |
| 23 | 1H3–23125–00 | ..METAL CORREDIZO 1 | 1 | 1 | | | | |
| 24 | 18G–23110–00 | .TUBO INTERIOR COMPLETO 1 | 1 | 1 | | | | |
| 25 | 1W1–23173–L0 | .VASTAGO AHUSADO | 1 | 1 | | | | |
| 26 | 18G–23170–00 | .CILINDRO COMPL DE HORQ DELAN | 1 | 1 | | | | |
| 27 | 509–23158–L0 | .EMPAQUE | 1 | 1 | | | | |

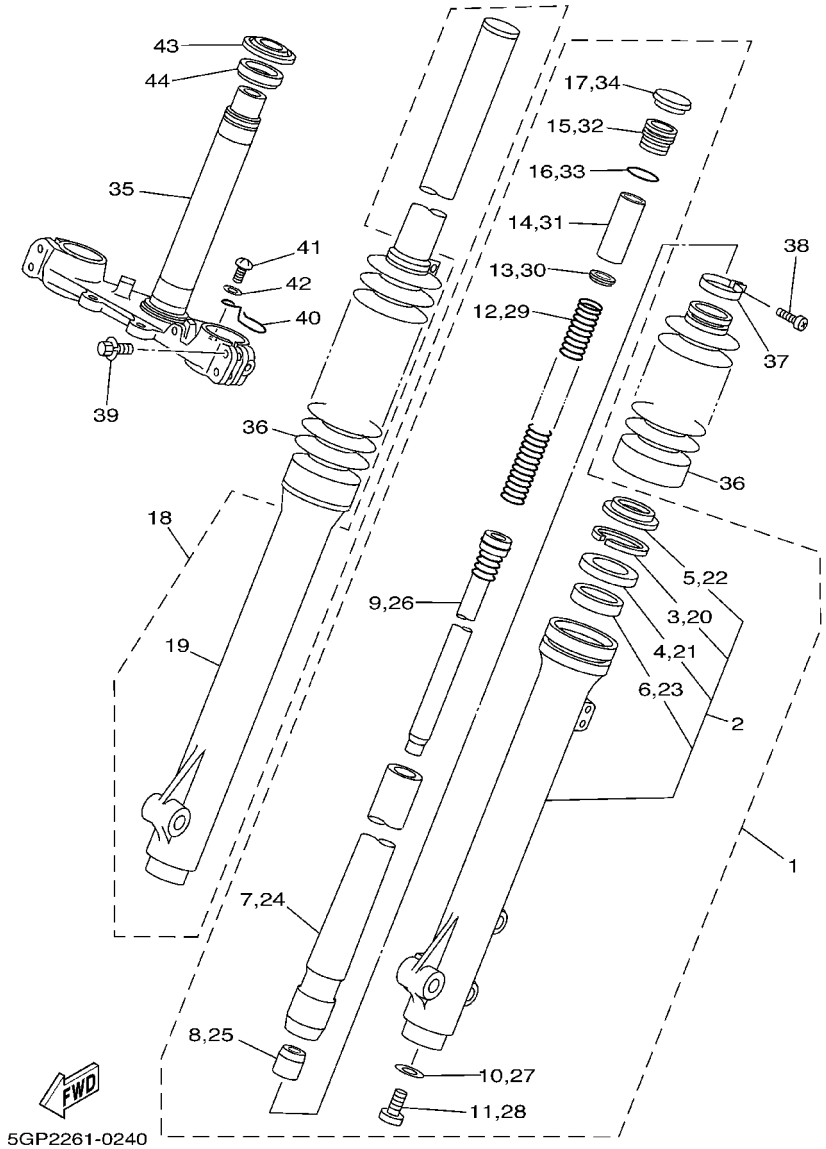


## FIG. 22 HORQUILLA DELANTERA

| REF. NO. | CODIGO NO. | DESCRIPCION | 5GP3 | 3TK7 | | | | OBSERVACION |
|---|---|---|---|---|---|---|---|---|
| 28 | 278–23181–50 | .TORNILLO CABEZAHEXAGONAL | 1 | 1 | | | | |
| 29 | 18G–23141–00 | .RESORTE HORQUILLA DELANT. | 1 | 1 | | | | |
| 30 | 3DM–23149–10 | .ARANDELA DE RESORTE SUPERIOR | 1 | 1 | | | | |
| 31 | 5N8–23118–00 | .SEPARADOR | 1 | 1 | | | | |
| 32 | 1U6–23111–M1 | .TAPON | 1 | 1 | | | | |
| 33 | 240–23114–00 | .EMPAQUE | 1 | 1 | | | | |
| 34 | 1U6–23168–M0 | .TAPA DE HORQUILLA DELANTERA | 1 | 1 | | | | |
| 35 | 3TS–23340–00 | PLATINA INFERIOR COMPLETA | 1 | 1 | | | | |
| 36 | 18G–23191–00 | FUNDA | 2 | 2 | | | | |
| 37 | 18G–23192–00 | BANDA | 2 | 2 | | | | |
| 38 | 509–23194–L0 | TORNILLO DE BANDA DE FUNDA | 2 | 2 | | | | |
| 39 | 18G–23128–00 | PERNO DE SOSTEN DE EJE | 4 | 4 | | | | |
| 40 | 10V–2331E–02 | GUIA DE CABLE | 1 | 1 | | | | |
| 41 | 98517–06012 | TORNILLO DE CABEZA CON PLANA | 1 | 1 | | | | |
| 42 | 92901–06100 | ARANDELA | 1 | 1 | | | | |
| 43 | 156–23411–00 | PISTA DE BOLAS 1 | 1 | 1 | | | | |
| 44 | 164–23462–00 | RETEN DE DIRECCION | 1 | 1 | | | | |

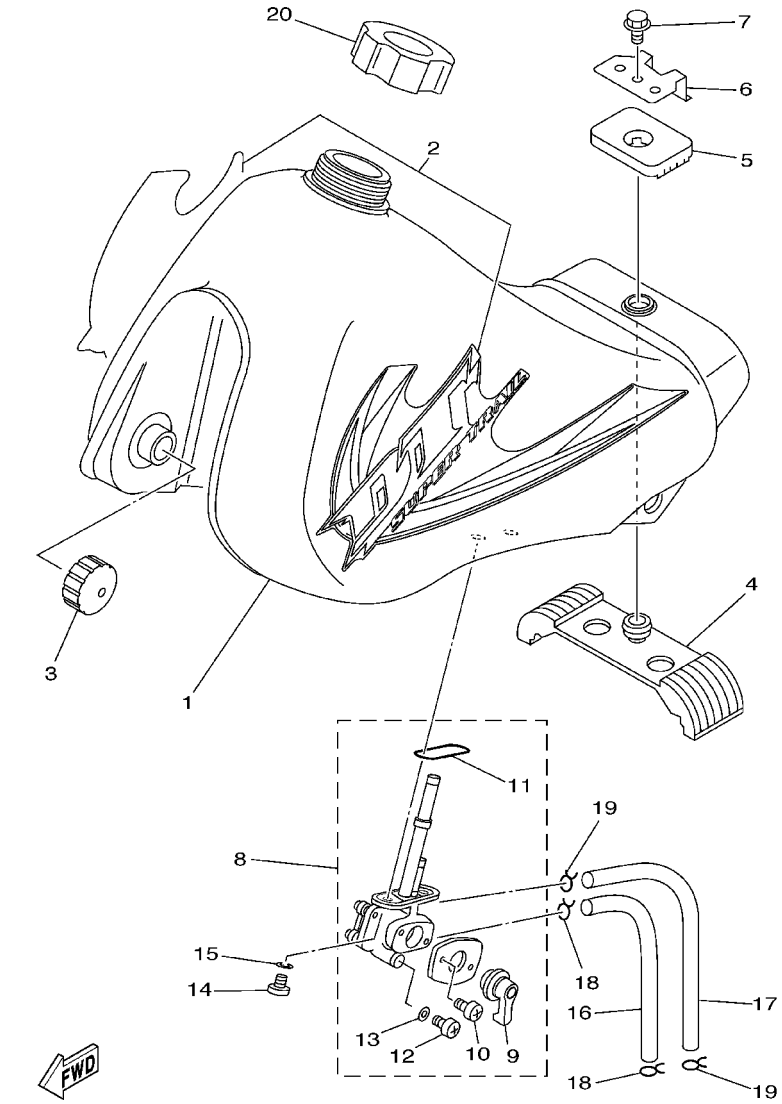


## FIG. 23 DEPOSITO DE COMBUSTIBLE

| REF. NO. | CODIGO NO. | DESCRIPCION | 5GP3 | 3TK7 | | | | OBSERVACION |
|---|---|---|---|---|---|---|---|---|
| 1 | 3TL–F4110–10–GE | DEPOSITO DE COMBUSTIBLE COMP. | 1 | 1 | | | | UR SW |
| | 3TL–F4110–10–P6 | DEPOSITO DE COMBUSTIBLE COMP. | 1 | 1 | | | | UR VRC7 |
| | 3TL–F4110–10–P4 | DEPOSITO DE COMBUSTIBLE COMP. | 1 | 1 | | | | UR CM3 |
| | 3TL–F4110–10–P0 | DEPOSITO DE COMBUSTIBLE COMP. | 1 | 1 | | | | UR DPBMC |
| 2 | 3TT–F4240–60 | JUEGO DE CALCOMANIAS | 1 | 1 | | | | UR PARA SW |
| | 3TT–F4240–70 | JUEGO DE CALCOMANIAS | 1 | 1 | | | | UR PARA VRC7 |
| | 3TT–F4240–80 | JUEGO DE CALCOMANIAS | 1 | 1 | | | | UR PARA CM3 |
| | 3TT–F4240–90 | JUEGO DE CALCOMANIAS | 1 | 1 | | | | UR PARA DPBMC |
| 3 | 3TL–F4181–00 | AMORTIGUADOR DE MONTAJE 1 | 2 | 2 | | | | |
| 4 | 3TL–F4182–00 | AMORTIGUADOR DE MONTAJE 2 | 1 | 1 | | | | |
| 5 | 3TL–F4183–00 | AMORTIGUADOR DE MONTAJE 3 | 1 | 1 | | | | |
| 6 | 3TL–F4186–00 | ARANDELA ESPECIAL | 1 | 1 | | | | |
| 7 | 95807–06010 | TUERCA DE REBORDE | 1 | 1 | | | | |
| 8 | 18G–24500–02 | GRIFO DE COMBUSTIBLE 1 | 1 | 1 | | | | |
| 9 | 3H3–W0092–00 | .JUEGO DE VALVULAS DE GRIFO | 1 | 1 | | | | |
| 10 | 98501–03008 | .TORNILLO DE CABEZA CON PLANA | 2 | 2 | | | | |
| 11 | 2W6–24512–00 | .EMPAQUE | 1 | 1 | | | | |
| 12 | 92502–06008 | .TORNILLO CABEZA CONICA PLANA | 1 | 1 | | | | |
| 13 | 2G2–24522–00 | .EMPAQUE | 1 | 1 | | | | |
| 14 | 90149–06011 | TORNILLO DE REGLAJE | 2 | 2 | | | | |
| 15 | 90202–05193 | ARANDELA DE PLANA | 2 | 2 | | | | |
| 16 | 90445–104H8 | TUBO (L185) | 1 | 1 | | | | |
| 17 | 90445–095A1 | TUBO (L185) | 1 | 1 | | | | |
| 18 | 90467–09006 | PRESILLA | 2 | 2 | | | | |
| 19 | 90467–08075 | PRESILLA | 2 | 2 | | | | |
| 20 | 11H–24602–03 | TAPON COMPLETO | 1 | 1 | | | | |

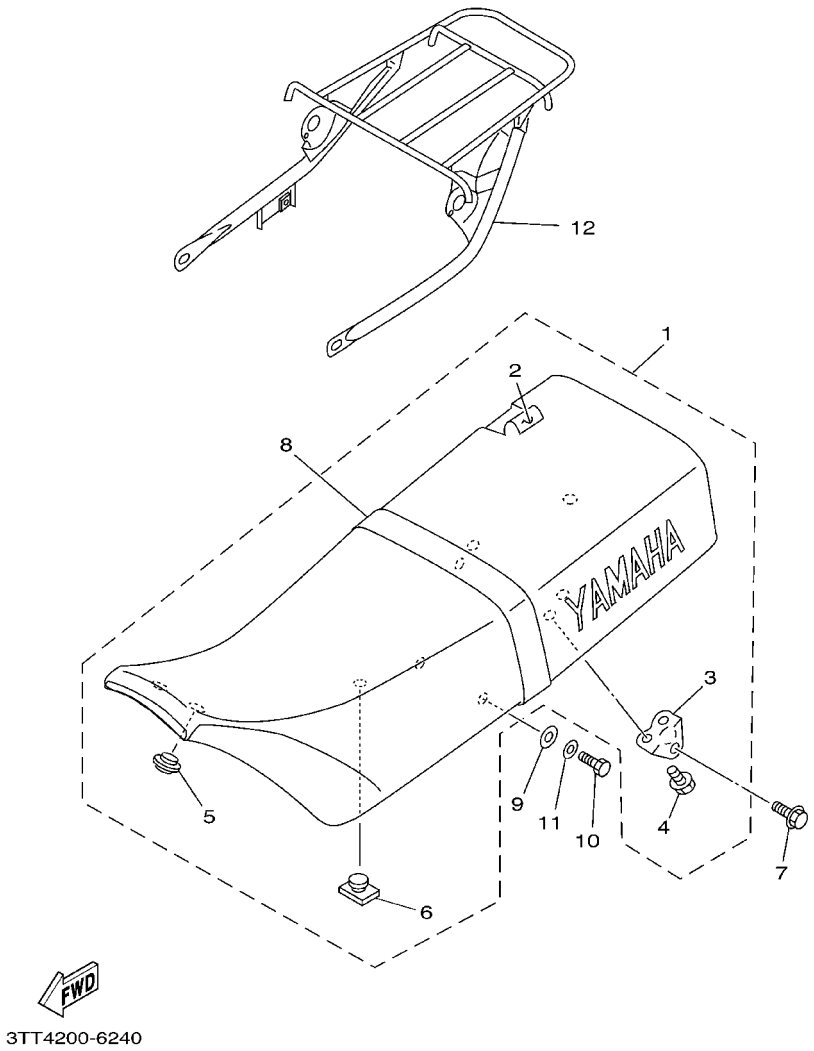


## FIG. 24 ASIENTO

| REF. NO. | CODIGO NO. | DESCRIPCION | 5GP3 | 3TK7 | | | | OBSERVACION |
|---|---|---|---|---|---|---|---|---|
| 1 | 3TL–F4770–B0 | ASIENTO SEMI–DOBLE COMPLETO | 1 | 1 | | | | UR PARA SW,VRC7 |
| | 3TL–F4770–10 | ASIENTO SEMI–DOBLE COMPLETO | 1 | 1 | | | | UR PARA CM3 |
| | 3TL–F4770–90 | ASIENTO SEMI–DOBLE COMPLETO | 1 | 1 | | | | UR PARA DPBMC |
| 2 | 3TL–F4731–R0 | .FUNDA DE SILLIN | 1 | 1 | | | | |
| 3 | 3TL–F4738–00 | .SOPORTE DE ASIENTO | 2 | 2 | | | | |
| 4 | 95807–06012 | .TUERCA DE REBORDE | 4 | 4 | | | | |
| 5 | 3NX–F4723–00 | .AMORTIGUADOR DE ASIENTO | 1 | 1 | | | | |
| 6 | 3TL–F4724–00 | .AMORTIGUADOR DE ASIENTO | 2 | 2 | | | | |
| 7 | 95807–08045 | TUERCA DE REBORDE | 2 | 2 | | | | |
| 8 | 3TL–F4734–B0 | BANDA DE ASIENTO | 1 | 1 | | | | UR PARA SW,VRC7 |
| | 3TL–F4734–10 | BANDA DE ASIENTO | 1 | 1 | | | | UR YB PARA CM3 |
| | 3TL–F4734–90 | BANDA DE ASIENTO | 1 | 1 | | | | UR PARA DPBMC |
| 9 | 92907–08200 | ARANDELA | 2 | 2 | | | | |
| 10 | 97007–08016 | PERNO | 2 | 2 | | | | |
| 11 | 92907–08600 | ARANDELA | 2 | 2 | | | | |
| 12 | 3TL–F4830–00 | SUBPORTADOR COMPLETO | 1 | 1 | | | | |

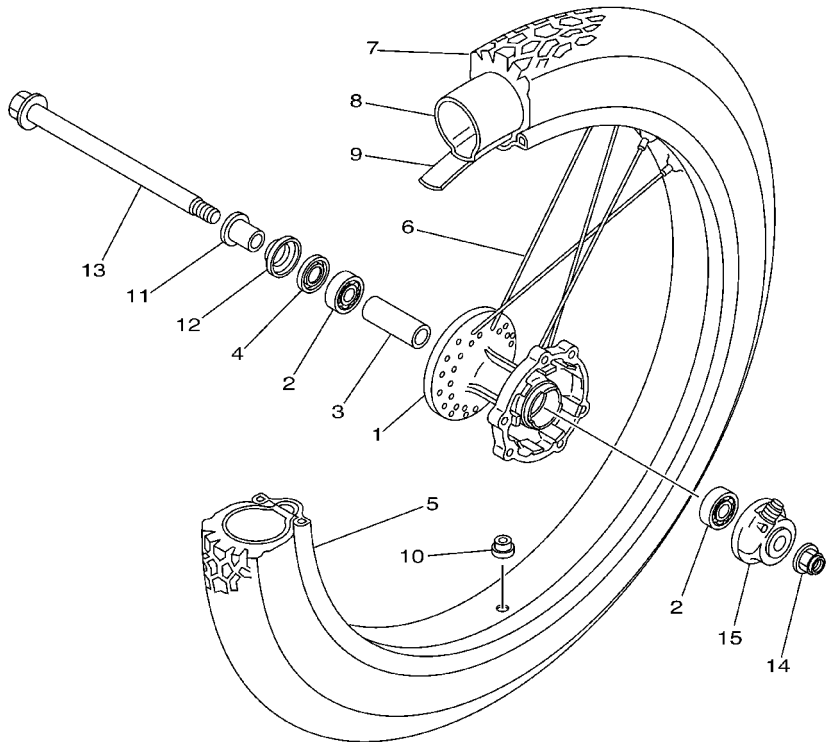

3TT5200-9280

## FIG. 25 RUEDA DELANTERA

| REF. NO. | CODIGO NO. | DESCRIPCION | 5GP3 | 3TK7 | | | | OBSERVACION |
|---|---|---|---|---|---|---|---|---|
| 1 | 34X–25111–02–35 | MASA DELANTERA | 1 | 1 | | | | SL |
| 2 | 93306–20205 | COJINETE (B6202) | 2 | 2 | | | | |
| 3 | 90560–15290 | SEPARADOR | 1 | 1 | | | | |
| 4 | 93102–20281 | SELLO ACEITE (SD 20–35–5) | 1 | 1 | | | | |
| 5 | 94416–21007 | ARO (1.60–21) | 1 | 1 | | | | |
| 6 | 5GP–F5104–00 | JUEGO DE RAYOS DELANTERO | 1 | 1 | | | | |
| 7 | 94127–21779 | NEUMATICO (MCS 2.75–21 4PR) | 1 | 1 | | | | UR BRIDGESTONE |
| | 94127–210A1 | NEUMATICO (2.75–21) | 1 | 1 | | | | UR YOKOHAMA |
| 8 | 94227–21123 | TUBO (2.75–21) | 1 | 1 | | | | UR BRIDGESTONE |
| | 94225–21186 | TUBO (2.50–21) | 1 | 1 | | | | UR YOKOHAMA |
| 9 | 94330–21084 | BANDA DE ARO (3.00–21) | 1 | 1 | | | | UR BRIDGESTONE |
| | 94325–21117 | BANDA DE ARO (2.50–21) | 1 | 1 | | | | UR YOKOHAMA |
| 10 | 90338–09130 | TAPON | 1 | 1 | | | | |
| 11 | 90387–15600 | COLLAR | 1 | 1 | | | | |
| 12 | 322–25118–00 | CUBIERTA DE MASA PARA POLVO | 1 | 1 | | | | |
| 13 | 5GP–F5181–00 | EJE DE LA RUEDA | 1 | 1 | | | | |
| 14 | 95604–14200 | TUERCA DE AUTO–CIERRE | 1 | 1 | | | | |
| 15 | 34X–25190–01 | UNIDAD DE ENGRANAJE COMPLETA | 1 | 1 | | | | |

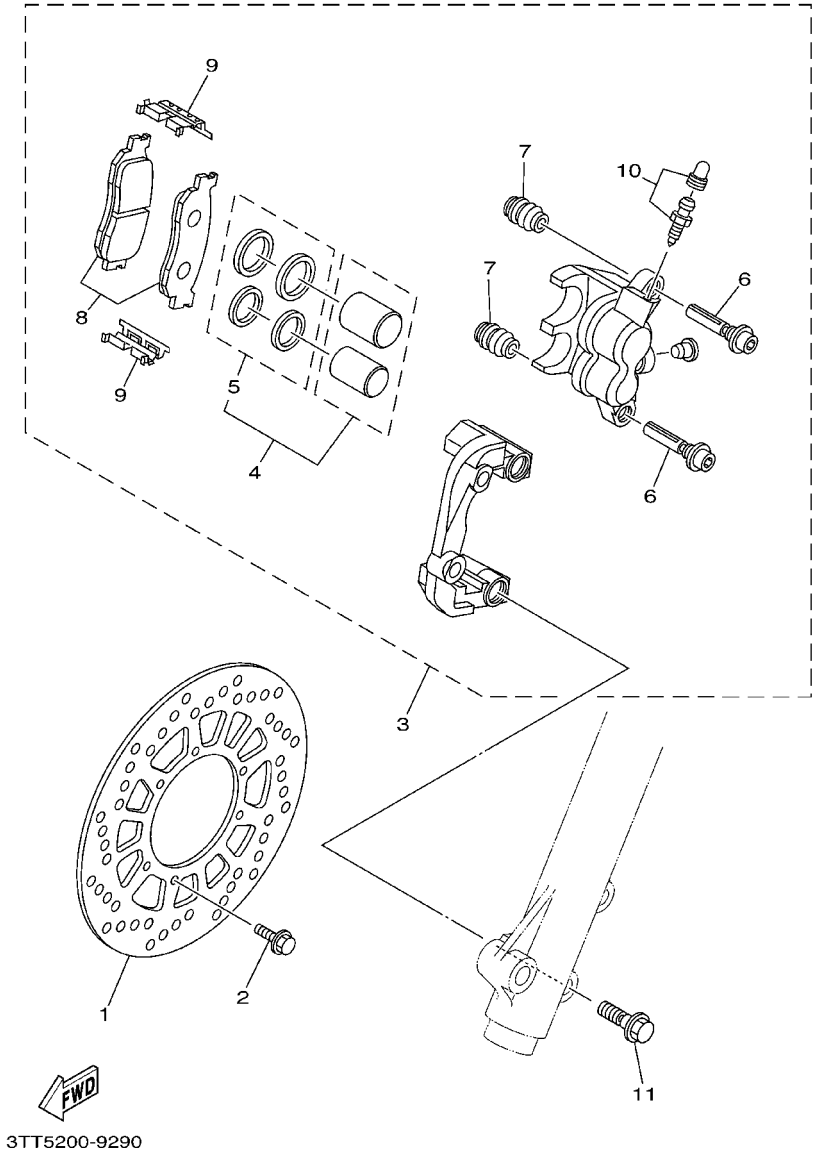


## FIG. 26 CALIBRE FRENO DELANTERA

| REF. NO. | CODIGO NO. | DESCRIPCION | 5GP3 | 3TK7 | | | | OBSERVACION |
|---|---|---|---|---|---|---|---|---|
| 1 | 4JG-2582T-10 | DISCO DE FRENO (IZQUIERDO) | 1 | 1 | | | | |
| 2 | 90109-065G4 | PERNO | 6 | 6 | | | | |
| 3 | 4JG-2580T-00 | CALIBRE COMPLETO (IZQUIERDO) | 1 | 1 | | | | |
| 4 | 4JG-W0057-00 | .PISTON COMPLETO PINZA | 1 | 1 | | | | |
| 5 | 4JG-W0047-00 | ..JUEGO DE RETENES DE PINZA | 1 | 1 | | | | |
| 6 | 5JW-25914-00 | .PASADOR | 2 | 2 | | | | |
| 7 | 4TT-25937-00 | .FUNDA | 2 | 2 | | | | |
| 8 | 4JG-W0045-00 | .JUEGO DE COJIN DE FRENO | 1 | 1 | | | | |
| 9 | 4TT-25919-00 | .SOPORTE DE PASTILLAS | 2 | 2 | | | | |
| 10 | 51L-W0048-00 | .CJTO TORNILLO DE PURGA | 1 | 1 | | | | |
| 11 | 90105-10638 | TORNILLO CON ARANDELA | 2 | 2 | | | | |

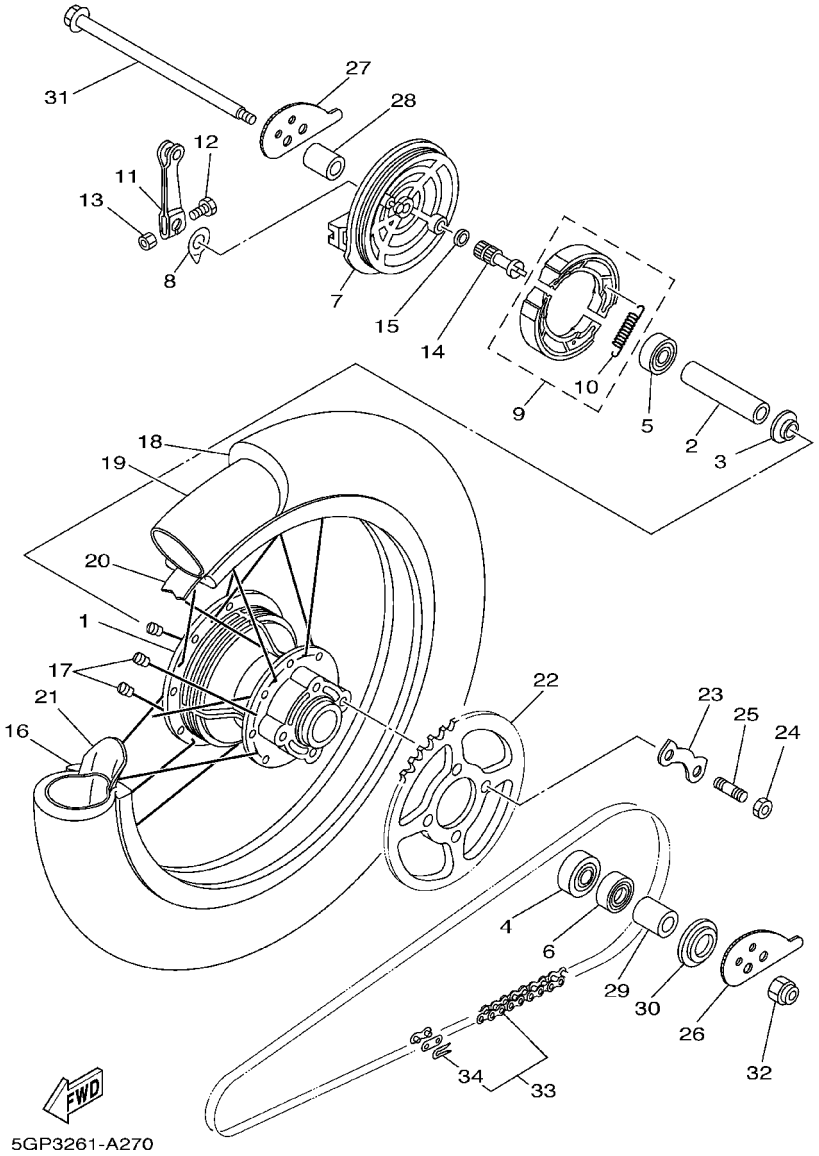


## FIG. 27 RUEDA TRASERA

| REF. NO. | CODIGO NO. | DESCRIPCION | 5GP3 | 3TK7 | | | | OBSERVACION |
|---|---|---|---|---|---|---|---|---|
| 1 | 10V–25311–00–35 | MASA TRASERA | 1 | 1 | | | | SL |
| 2 | 90560–15313 | SEPARADOR | 1 | 1 | | | | |
| 3 | 148–25115–00 | BRIDA DE ESPACIADOR 1 | 1 | 1 | | | | |
| 4 | 93306–30212 | COJINETE | 1 | 1 | | | | |
| 5 | 93306–20212 | COJINETE | 1 | 1 | | | | |
| 6 | 93106–26005 | SELLO ACEITE | 1 | 1 | | | | |
| 7 | 10V–25321–00–35 | PLACA DE ZAPATA DE FRENO | 1 | 1 | | | | SL |
| 8 | 3Y6–2533A–01 | PLACA INDICADOR | 1 | 1 | | | | |
| 9 | 3KG–W253E–00 | JUEGO DE ZAPATA DE FRENO | 1 | 1 | | | | |
| 10 | 90506–15260 | .RESORTE DE TENSION | 2 | 2 | | | | |
| 11 | 1E2–25155–00 | PALANCA DE ARBOL DE LEVAS | 1 | 1 | | | | |
| 12 | 90101–06278 | TORNILLO | 1 | 1 | | | | |
| 13 | 95307–06600 | TUERCA | 1 | 1 | | | | |
| 14 | 248–25351–10 | ARBOL DE LEVAS | 1 | 1 | | | | |
| 15 | 148–25359–00 | SELLO DE ARBOL DE LEVAS | 1 | 1 | | | | |
| 16 | 94418–18007 | ARO (1.85–18) | 1 | 1 | | | | |
| 17 | 5GP–F5304–00 | JUEGO DE RAYOS TRASEROS | 1 | 1 | | | | |
| 18 | 94141–18780 | NEUMATICO (MCS 4.10–18 ) | 1 | 1 | | | | UR BRIDGESTONE |
| | 94141–180A2 | NEUMATICO (4.10–18) | 1 | 1 | | | | UR YOKOHAMA |
| 19 | 94241–18153 | TUBO (4.10–18) | 1 | 1 | | | | UR BRIDGESTONE |
| | 94235–18085 | TUBO (3.50–18) | 1 | 1 | | | | UR YOKOHAMA |
| 20 | 94330–18087 | BANDA DE ARO (3.00–18) | 1 | 1 | | | | UR BRIDGESTONE |
| | 94340–18065 | BANDA DE ARO (4.00–18) | 1 | 1 | | | | UR YOKOHAMA |
| 21 | 1T2–25394–00 | ESPACIDOR DE BANCADA | 1 | 1 | | | | |
| 22 | 3TL–F5447–00 | CORONA (47T) | 1 | | | | | |
| | 3TK–F5449–00 | CORONA (49T) | | 1 | | | | |
| 23 | 3TL–F5412–00 | ARANDELA | 2 | 2 | | | | |

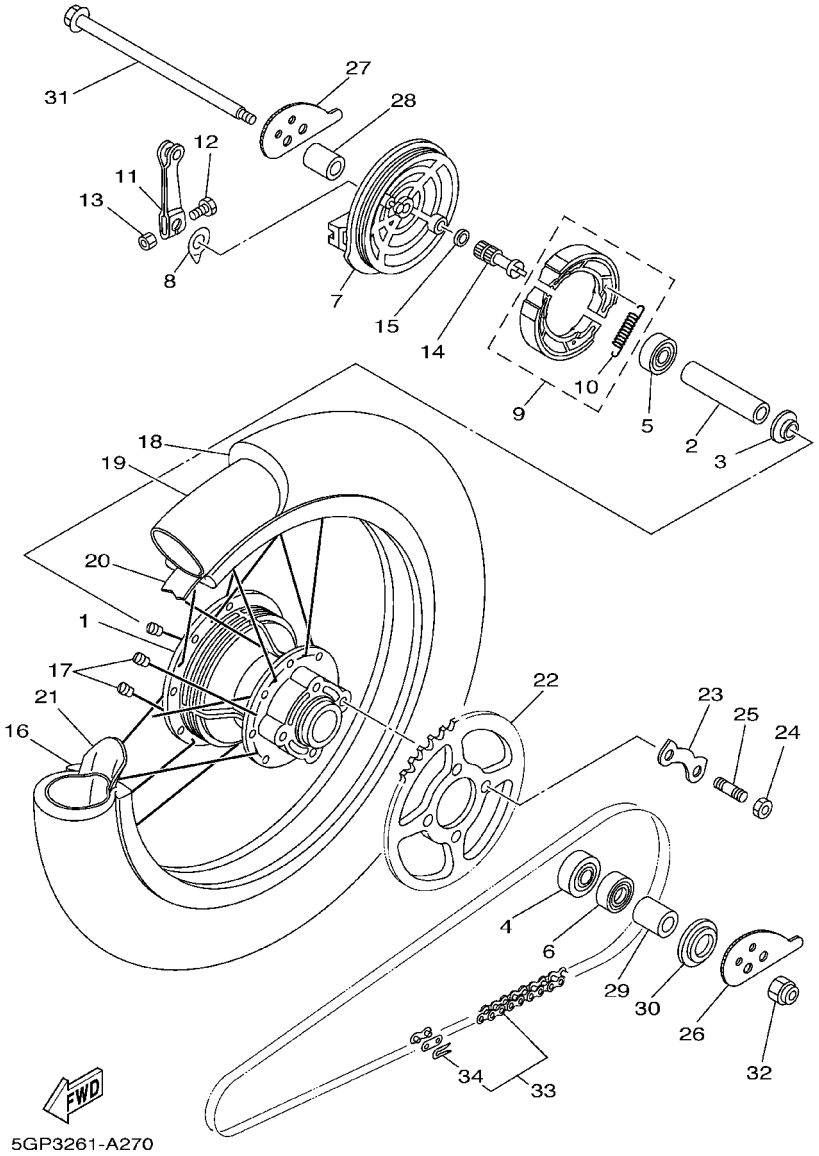


## FIG. 27 RUEDA TRASERA

| REF. NO. | CODIGO NO. | DESCRIPCION | 5GP3 | 3TK7 | | | | OBSERVACION |
|---|---|---|---|---|---|---|---|---|
| 24 | 90170–10219 | TUERCA | 4 | 4 | | | | |
| 25 | 90116–10390 | ESPARRAGO | 4 | 4 | | | | |
| 26 | 3TL–F5388–00 | TIRADOR DE CADENA 1 | 1 | 1 | | | | |
| 27 | 3TL–F5389–00 | TIRADOR DE CADENA 2 | 1 | 1 | | | | |
| 28 | 90387–157F0 | COLLAR | 1 | 1 | | | | |
| 29 | 90387–157F0 | COLLAR | 1 | 1 | | | | |
| 30 | 401–25367–00 | CUBIERTA DE MASA PARA POLVO | 1 | 1 | | | | |
| 31 | 5GP–F5381–00 | EJE DE RUEDA | 1 | 1 | | | | |
| 32 | 95604–14200 | TUERCA DE AUTO–CIERRE | 1 | 1 | | | | |
| 33 | 94580–88116 | CADENA (DID428HG–116LL) | 1 | | | | | |
| | 94580–88118 | CADENA (DID428HG–118L) | | 1 | | | | |
| 34 | 94680–88001 | .CONECTOR DE CADENA (DID 428HG) | 1 | 1 | | | | |

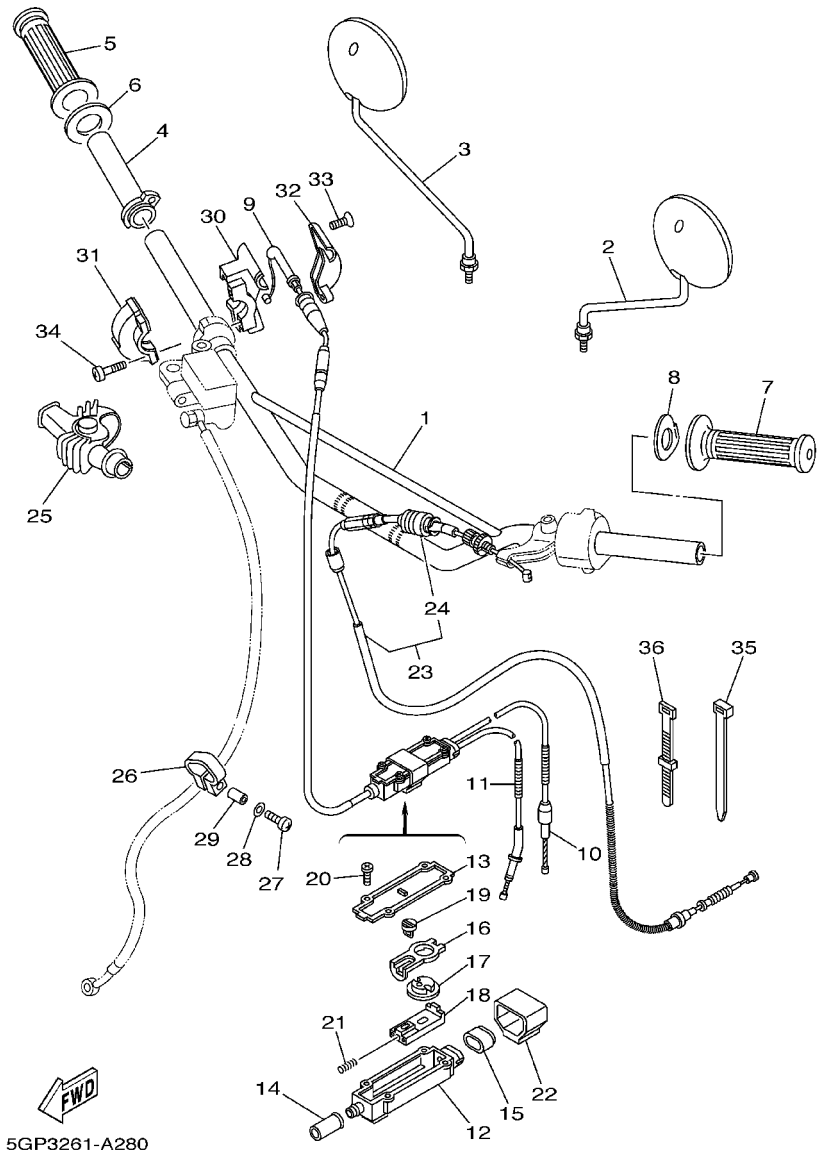


## FIG. 28 MANUBRIO. CABLE

| REF. NO. | CODIGO NO. | DESCRIPCION | 5GP3 | 3TK7 | | | | OBSERVACION |
|---|---|---|---|---|---|---|---|---|
| 1 | 3TK-F6111-00 | MANUBRIO | 1 | 1 | | | | |
| 2 | 4E9-F6290-00 | ESPEJO COMPLETO (MI) | 1 | 1 | | | | |
| 3 | 4E9-F6290-10 | ESPEJO COMPLETO (MD) | 1 | 1 | | | | |
| 4 | 3TK-F6243-00 | TUBO DE GUIA DE OBTURADOR | 1 | 1 | | | | |
| 5 | 3TL-F6242-00 | EMPUNADURA (MD) | 1 | 1 | | | | |
| 6 | 3TL-F6249-00 | ANILLO DE FLEJE | 1 | 1 | | | | |
| 7 | 3TL-F6241-00 | EMPUNADURA | 1 | 1 | | | | |
| 8 | 4RR-26129-00 | ARANDELA | 1 | 1 | | | | |
| 9 | 3TS-26311-00 | CABLE DE ACELERADOR 1 | 1 | 1 | | | | |
| 10 | 3J1-26312-01 | CABLE DE ACELERADOR 2 | 1 | 1 | | | | |
| 11 | 18G-26321-10 | CABLE DE BOMBA | 1 | | | | | |
| | 18L-26321-10 | CABLE DE BOMBA | | 1 | | | | |
| 12 | 3J0-26261-00 | CONECTOR DE CABLE | 1 | 1 | | | | |
| 13 | 3J0-26262-00 | TAPA DE CABLE CONECTOR | 1 | 1 | | | | |
| 14 | 156-26329-00 | TAPA DE ANILLO PROTECTOR | 1 | 1 | | | | |
| 15 | 3J0-26272-00 | TAPON | 1 | 1 | | | | |
| 16 | 2T5-26274-00 | GUIA DE ROTOR | 1 | 1 | | | | |
| 17 | 2T5-26273-00 | ROTOR | 1 | 1 | | | | |
| 18 | 2T5-26244-00 | CORREDERA DE OBTURADOR | 1 | 1 | | | | |
| 19 | 2T5-26267-00 | PASADOR | 1 | 1 | | | | |
| 20 | 90167-03004 | TORNILLO DE ROSCA HEMBRA | 4 | 4 | | | | |
| 21 | 90501-05512 | RESORTE DE COMPRESION | 1 | 1 | | | | |
| 22 | 3J0-26393-00 | SOPORTE | 1 | 1 | | | | |
| 23 | 3TS-26335-00 | CABLE DE EMBRAGUE | 1 | 1 | | | | |
| 24 | 1E6-26342-00 | .FUNDA DE CABLE | 1 | 1 | | | | |
| 25 | 1T5-26372-00 | CUBIERTA DE PALANCA DE MANUB 1 | 1 | 1 | | | | |
| 26 | 3TB-23467-01 | GRAMPA | 1 | 1 | | | | |

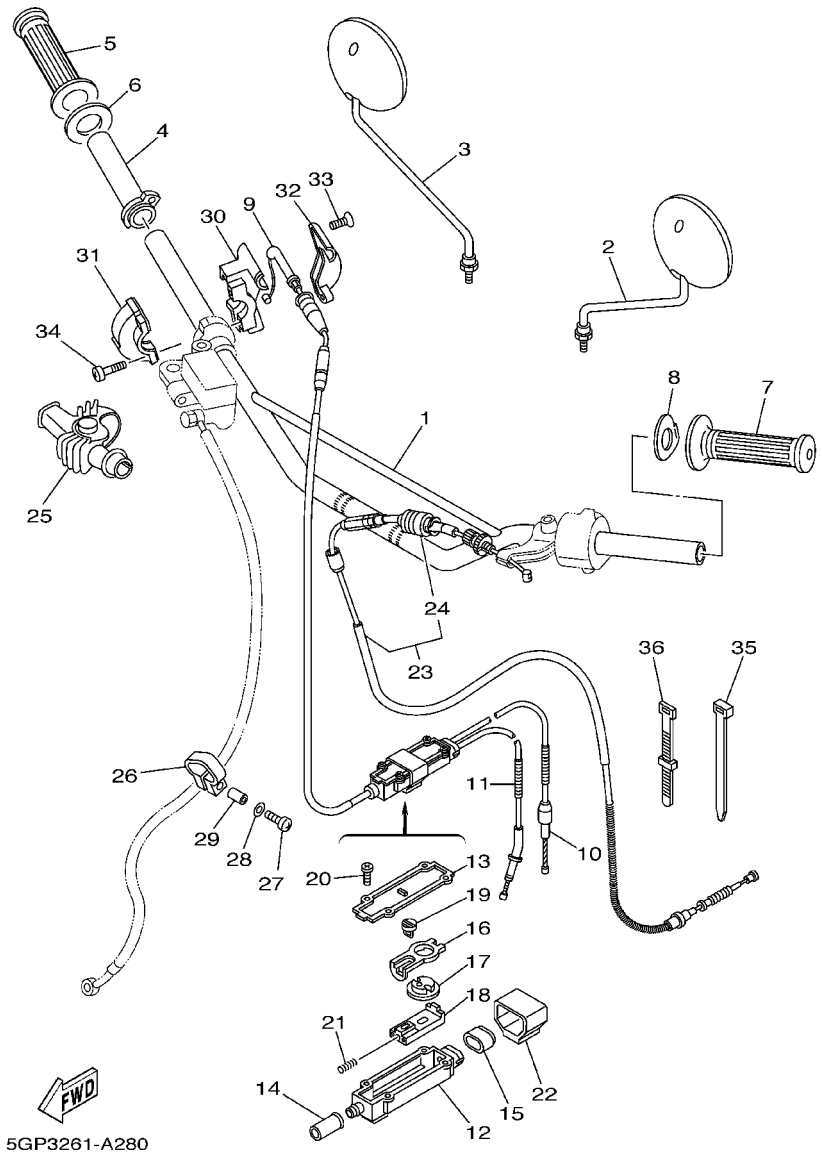


## FIG. 28 MANUBRIO. CABLE

| REF. NO. | CODIGO NO. | DESCRIPCION | 5GP3 | 3TK7 | | | | OBSERVACION |
|---|---|---|---|---|---|---|---|---|
| 27 | 98507–04018 | TORNILLO DE CABEZA CON PLANA | 1 | 1 | | | | |
| 28 | 92907–04600 | ARANDELA | 1 | 1 | | | | |
| 29 | 90445–057G5 | TUBO (L10) | 1 | 1 | | | | |
| 30 | 5X2–26281–00 | TAPA DE EMPUNADURA SUPERIOR | 1 | 1 | | | | |
| 31 | 322–26282–00 | TAPA DE EMPUNADURA INFERIOR | 1 | 1 | | | | |
| 32 | 5X2–2628H–01 | TAPA CABLE | 1 | 1 | | | | |
| 33 | 98707–04012 | TORNILLO DE CABEZA PLANA | 2 | 2 | | | | |
| 34 | 98507–05016 | TORNILLO DE CABEZA CON PLANA | 2 | 2 | | | | |
| 35 | 1UA–82591–00 | BANDA | 1 | 1 | | | | |
| 36 | 437–83936–11 | BANDA DE CABLE DE INTERRUPTOR | 1 | 1 | | | | |

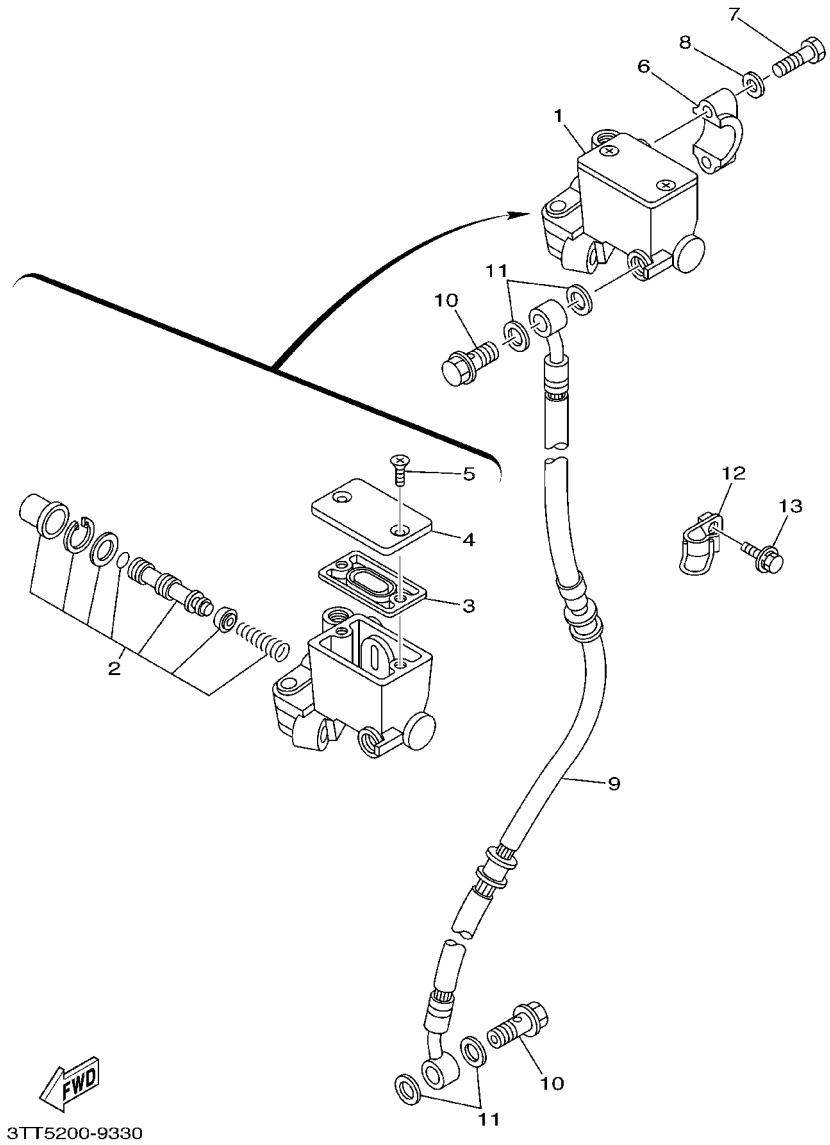


## FIG. 29 CILINDRO MAESTRO DELANTERO

| REF. NO. | CODIGO NO. | DESCRIPCION | 5GP3 | 3TK7 | | | | OBSERVACION |
|---|---|---|---|---|---|---|---|---|
| 1 | 5RS-25870-00 | CILINDRO MAESTRO COMPLETO | 1 | 1 | | | | |
| 2 | 3RW-W0041-02 | .JUEGO DE CILINDRO MAESTRO | 1 | 1 | | | | |
| 3 | 5RB-25854-00 | .DIAFRAGMA TANQUE RESERVA | 1 | 1 | | | | |
| 4 | 4GY-25852-01 | .TAPA DE TANQUE DE RESERVA | 1 | 1 | | | | |
| 5 | 36Y-2589H-00 | .TORNILLO | 2 | 2 | | | | |
| 6 | 3RW-25867-00 | SOPORTE DE CILINDRO MAESTRO | 1 | 1 | | | | |
| 7 | 97007-06025 | PERNO | 2 | 2 | | | | |
| 8 | 92907-06600 | ARANDELA | 2 | 2 | | | | |
| 9 | 3TS-25872-00 | MANGUERA DE FRENO 1 | 1 | 1 | | | | |
| 10 | 90401-10159 | PERNO DE UNION | 2 | 2 | | | | |
| 11 | 90201-10118 | ARANDELA PLANA | 4 | 4 | | | | |
| 12 | 3RW-25875-00 | SOPORTE DE MANGUERA FRENO 1 | 1 | 1 | | | | |
| 13 | 90119-06018 | TORNILLO CON ARANDELA | 1 | 1 | | | | |

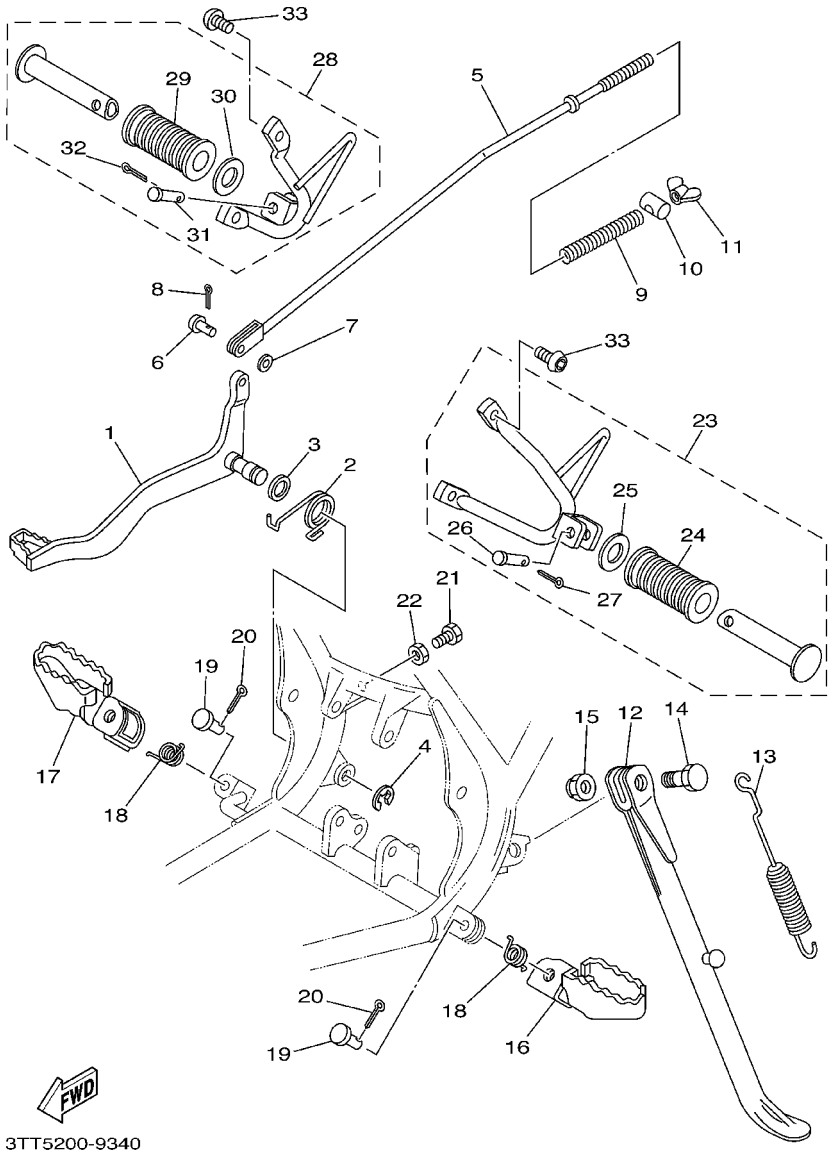


## FIG. 30 SOPORTE. APOYAPIE

| REF. NO. | CODIGO NO. | DESCRIPCION | 5GP3 | 3TK7 | | | | OBSERVACION |
|---|---|---|---|---|---|---|---|---|
| 1 | 3TL–F7211–00 | PEDAL DE FRENO | 1 | 1 | | | | |
| 2 | 90508–32354 | RESORTE DE TORSION | 1 | 1 | | | | |
| 3 | 90201–14212 | ARANDELA PLANA | 1 | 1 | | | | |
| 4 | 93430–10015 | BOLA | 1 | 1 | | | | |
| 5 | 1YX–F7231–00 | VARILLA DE FRENO | 1 | 1 | | | | |
| 6 | 90240–06006 | PASADOR CON HOYO | 1 | 1 | | | | |
| 7 | 92907–06200 | ARANDELA | 1 | 1 | | | | |
| 8 | 91401–20012 | PASADOR DE CHAVETA | 1 | 1 | | | | |
| 9 | 90501–10245 | RESORTE DE COMPRESION | 1 | 1 | | | | |
| 10 | 90249–12008 | PASADOR | 1 | 1 | | | | |
| 11 | 90175–06013 | TUERCA MARIPOSA | 1 | 1 | | | | |
| 12 | 21K–F7311–00 | PUNTAL LATERAL | 1 | 1 | | | | |
| 13 | 90507–29042 | RESORTE DE TENSION | 1 | 1 | | | | |
| 14 | 90109–10473 | PERNO | 1 | 1 | | | | |
| 15 | 90185–10037 | TUERCA AUTOBLOCANTE | 1 | 1 | | | | |
| 16 | 31U–F7411–00–90 | APOYAPIE 1 | 1 | 1 | | | | ZK |
| 17 | 31U–F7421–00–90 | APOYAPIE 2 | 1 | 1 | | | | ZK |
| 18 | 90508–20023 | RESORTE DE TORSION | 2 | 2 | | | | |
| 19 | 90240–08084 | PASADOR CON HOYO | 2 | 2 | | | | |
| 20 | 91401–25015 | PASADOR DE CHAVETA | 2 | 2 | | | | |
| 21 | 97007–06020 | PERNO | 1 | 1 | | | | |
| 22 | 95307–06700 | TUERCA | 1 | 1 | | | | |
| 23 | 3TL–F7430–00 | APOYAPIE POSTERIOR COMPLETO 1 | 1 | 1 | | | | |
| 24 | 59L–F7433–00 | .CUBIERTA APOYAPIE TRASERO | 1 | 1 | | | | |
| 25 | 90201–20279 | .ARANDELA PLANA | 1 | 1 | | | | |
| 26 | 90240–06052 | .PASADOR CON HOYO | 1 | 1 | | | | |
| 27 | 91401–20012 | .PASADOR DE CHAVETA | 1 | 1 | | | | |

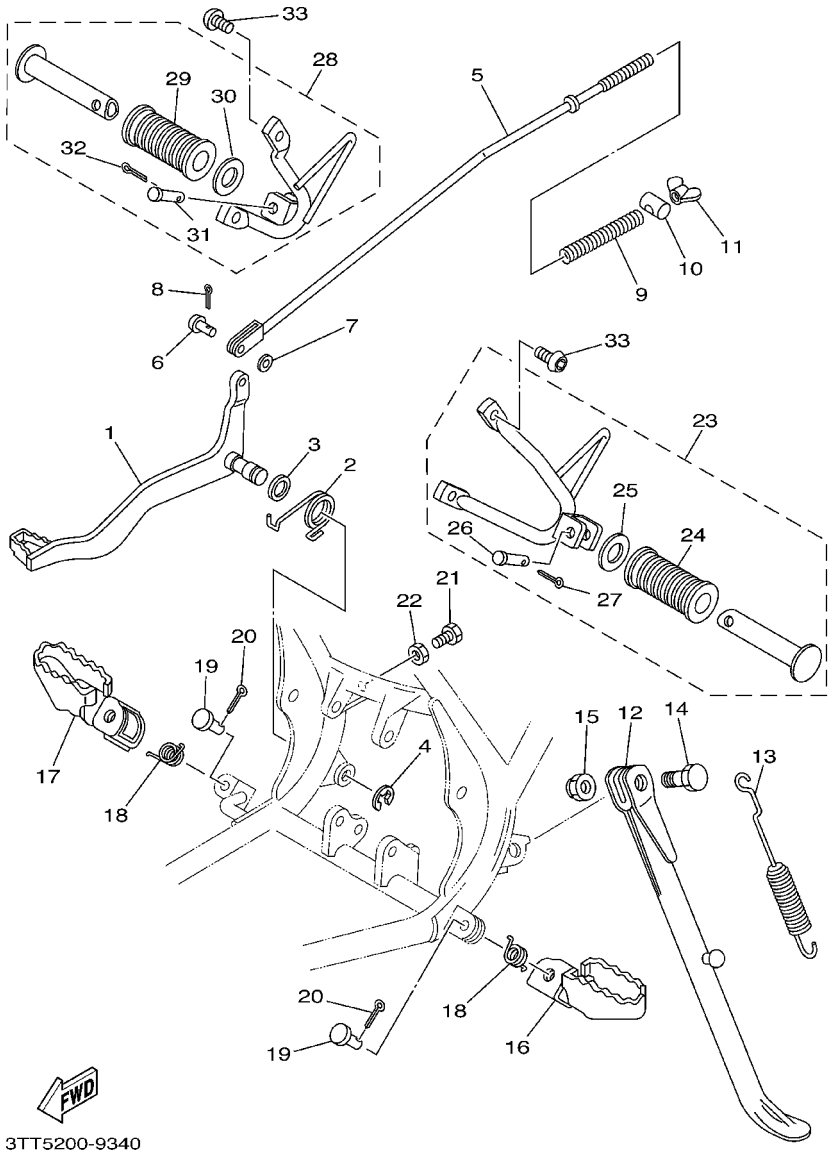


## FIG. 30 SOPORTE. APOYAPIE

| REF. NO. | CODIGO NO. | DESCRIPCION | 5GP3 | 3TK7 | | | | OBSERVACION |
|---|---|---|---|---|---|---|---|---|
| 28 | 3TL–F7440–00 | APOYAPIE POSTERIOR COMPLETO 2 | 1 | 1 | | | | |
| 29 | 59L–F7433–00 | .CUBIERTA APOYAPIE TRASERO | 1 | 1 | | | | |
| 30 | 90201–20279 | .ARANDELA PLANA | 1 | 1 | | | | |
| 31 | 90240–06052 | .PASADOR CON HOYO | 1 | 1 | | | | |
| 32 | 91401–20012 | .PASADOR DE CHAVETA | 1 | 1 | | | | |
| 33 | 92017–08016 | PERNO | 4 | 4 | | | | |

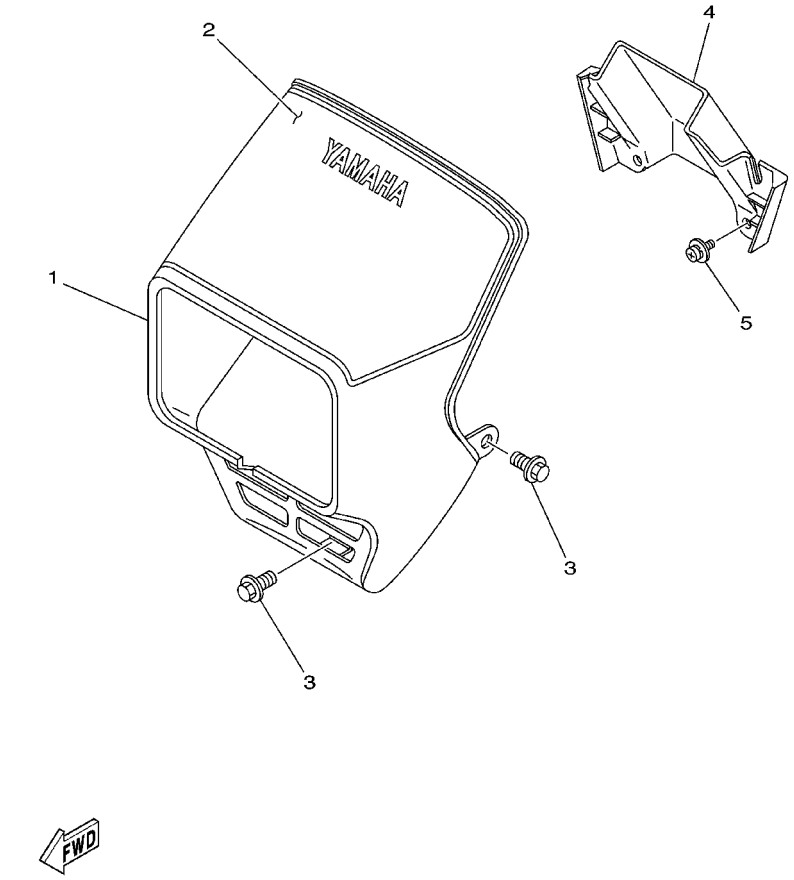


## FIG. 31 BOVEDA 1

| REF. NO. | CODIGO NO. | DESCRIPCION | 5GP3 | 3TK7 | | | | OBSERVACION |
|---|---|---|---|---|---|---|---|---|
| 1 | 18G–28351–10 | CUERPO DE COBERTURA | 1 | 1 | | | | UR PARA SW,VRC7 |
| | 18G–28351–20 | CUERPO DE COBERTURA | 1 | 1 | | | | UR PARA CM3 |
| | 3TK–F8351–00–P0 | CUERPO DE COBERTURA | 1 | 1 | | | | UR DPBMC |
| 2 | 3TT–F8391–00 | CALCOMANIA DE BOVEDA 1 | 1 | 1 | | | | UR PARA SW |
| | 3TT–F8391–10 | CALCOMANIA DE BOVEDA 1 | 1 | 1 | | | | UR PARA VRC7 |
| | 3TT–F8391–20 | CALCOMANIA DE BOVEDA 1 | 1 | 1 | | | | UR PARA CM3 |
| | 3TT–F8391–30 | CALCOMANIA DE BOVEDA 1 | 1 | 1 | | | | UR PARA DPBMC |
| 3 | 90119–06044 | TORNILLO CON ARANDELA | 3 | 3 | | | | |
| 4 | 3TL–F8361–00 | PLACA DELANTERA | 1 | 1 | | | | |
| 5 | 90159–06013 | TORNILLO CON VALONA | 2 | 2 | | | | |

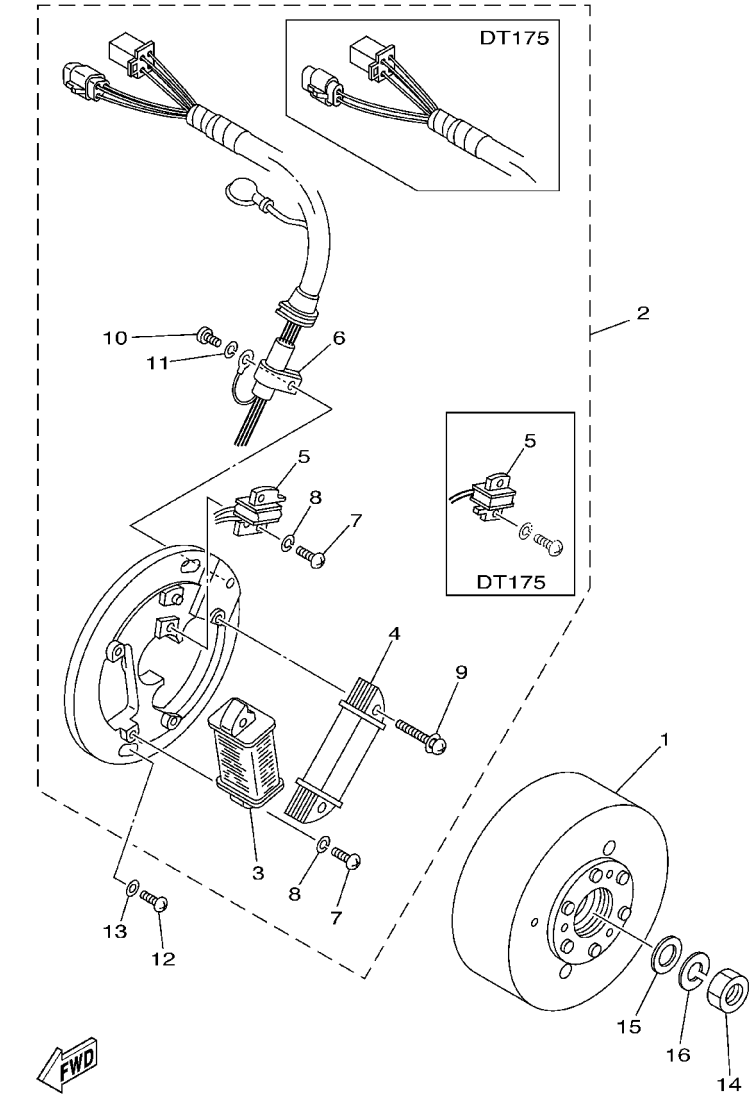


## FIG. 32 GENERADOR

| REF. NO. | CODIGO NO. | DESCRIPCION | 5GP3 | 3TK7 | | | | OBSERVACION |
|---|---|---|---|---|---|---|---|---|
| 1 | 4AR–85550–00 | ROTOR COMPLETO | 1 | | | | | |
| | 3FJ–85550–00 | ROTOR COMPLETO | | 1 | | | | |
| 2 | 3TT–85510–00 | ESTATOR COMPLET | 1 | | | | | |
| | 3TS–85510–00 | ESTATOR COMPLET | | 1 | | | | |
| 3 | 3FJ–85512–00 | .BOBINA DE FUENTE | 1 | 1 | | | | |
| 4 | 3FJ–85513–00 | .BOBINA DE LUZ 1 | 1 | 1 | | | | |
| 5 | 18G–85580–20 | .BOBINA DE PULSACION | 1 | | | | | |
| | 3FJ–85580–00 | .BOBINA DE PULSACION | | 1 | | | | |
| 6 | 104–81328–20 | .GRAMPA | 1 | 1 | | | | |
| 7 | 98501–04014 | .TORNILLO DE CABEZA CON PLANA | 3 | 3 | | | | |
| 8 | 92901–04100 | .ARANDELA | 3 | 3 | | | | |
| 9 | 97601–04132 | .TORNILLO CAB CON PLANA C/ARAN | 2 | 2 | | | | |
| 10 | 98501–04008 | .TORNILLO DE CABEZA CON PLANA | 1 | 1 | | | | |
| 11 | 92901–04100 | .ARANDELA | 1 | 1 | | | | |
| 12 | 98507–06016 | TORNILLO DE CABEZA CON PLANA | 2 | 2 | | | | |
| 13 | 92907–06600 | ARANDELA | 2 | 2 | | | | |
| 14 | 90170–12347 | TUERCA | 1 | 1 | | | | |
| 15 | 90201–12593 | ARANDELA PLANA | 1 | 1 | | | | |
| 16 | 92907–12100 | ARANDELA | 1 | 1 | | | | |

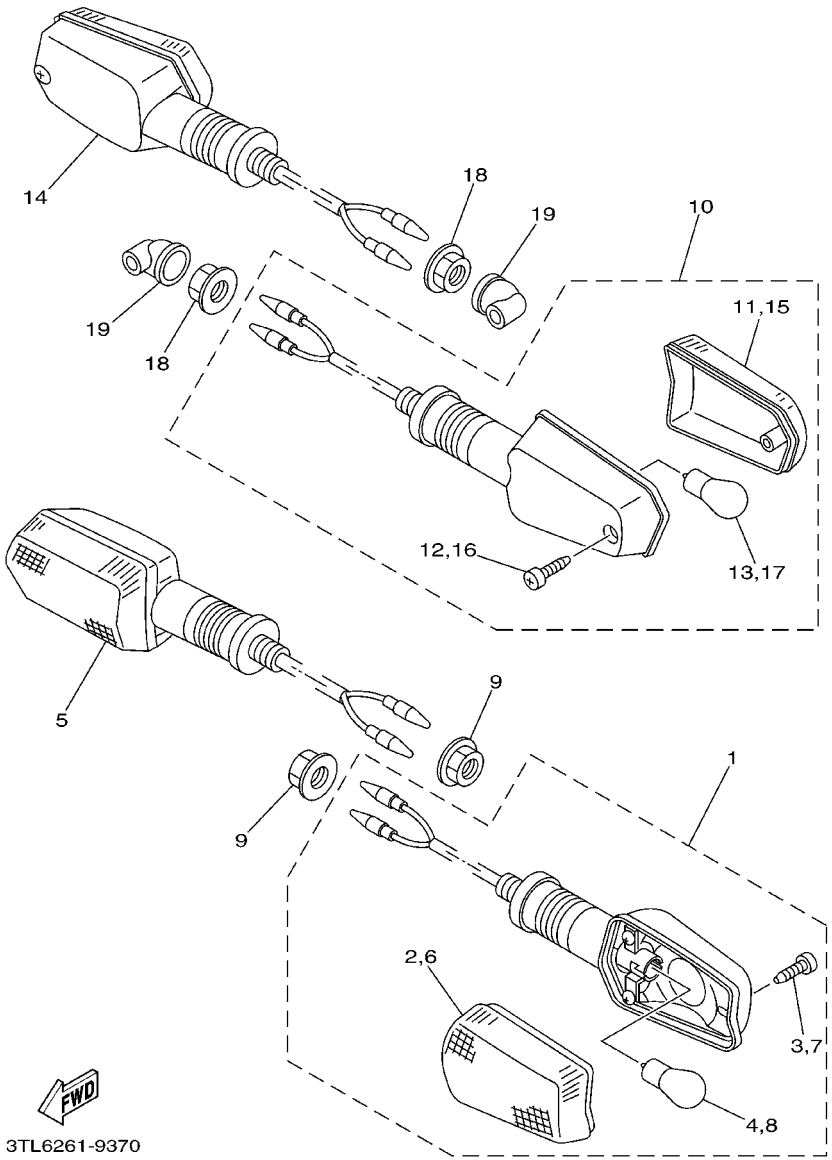


## FIG. 33 LUZ DE DESTELLADOR

| REF. NO. | CODIGO NO. | DESCRIPCION | 5GP3 | 3TK7 | | | | OBSERVACION |
|---|---|---|---|---|---|---|---|---|
| 1 | 3TL–H3310–00 | DESTELLADOR DE LUZ DELANT. | 1 | 1 | | | | |
| 2 | 3TL–H3312–00 | .LENTE DE DESTELLADOR | 1 | 1 | | | | |
| 3 | 3TL–H3317–00 | .PERNO DE INTERMITENTE 1 | 1 | 1 | | | | |
| 4 | 3TL–H3311–00 | .BOMBILLA (12V–21W) | 1 | 1 | | | | |
| 5 | 3TL–H3320–00 | DESTELLADOR DE LUZ DELANT. | 1 | 1 | | | | |
| 6 | 3TL–H3322–00 | .LENTE DE INTERMITENTE 2 | 1 | 1 | | | | |
| 7 | 3TL–H3317–00 | .PERNO DE INTERMITENTE 1 | 1 | 1 | | | | |
| 8 | 3TL–H3311–00 | .BOMBILLA (12V–21W) | 1 | 1 | | | | |
| 9 | 95707–12500 | TUERCA DE BRIDA | 2 | 2 | | | | |
| 10 | 3TL–H3330–00 | DESTELLADOR DE LUZ TRAS.COMPL. | 1 | 1 | | | | |
| 11 | 3TL–H3332–00 | .LENTE DE DESTELLADOR | 1 | 1 | | | | |
| 12 | 3TL–H3317–00 | .PERNO DE INTERMITENTE 1 | 1 | 1 | | | | |
| 13 | 3TL–H3311–00 | .BOMBILLA (12V–21W) | 1 | 1 | | | | |
| 14 | 3TL–H3340–00 | DESTELLADOR DE LUZ COMPL. | 1 | 1 | | | | |
| 15 | 3TL–H3342–00 | .LENTE DE DESTELLADOR | 1 | 1 | | | | |
| 16 | 3TL–H3317–00 | .PERNO DE INTERMITENTE 1 | 1 | 1 | | | | |
| 17 | 3TL–H3311–00 | .BOMBILLA (12V–21W) | 1 | 1 | | | | |
| 18 | 95707–12500 | TUERCA DE BRIDA | 2 | 2 | | | | |
| 19 | 3TL–H3365–00 | TAPON | 2 | 2 | | | | |

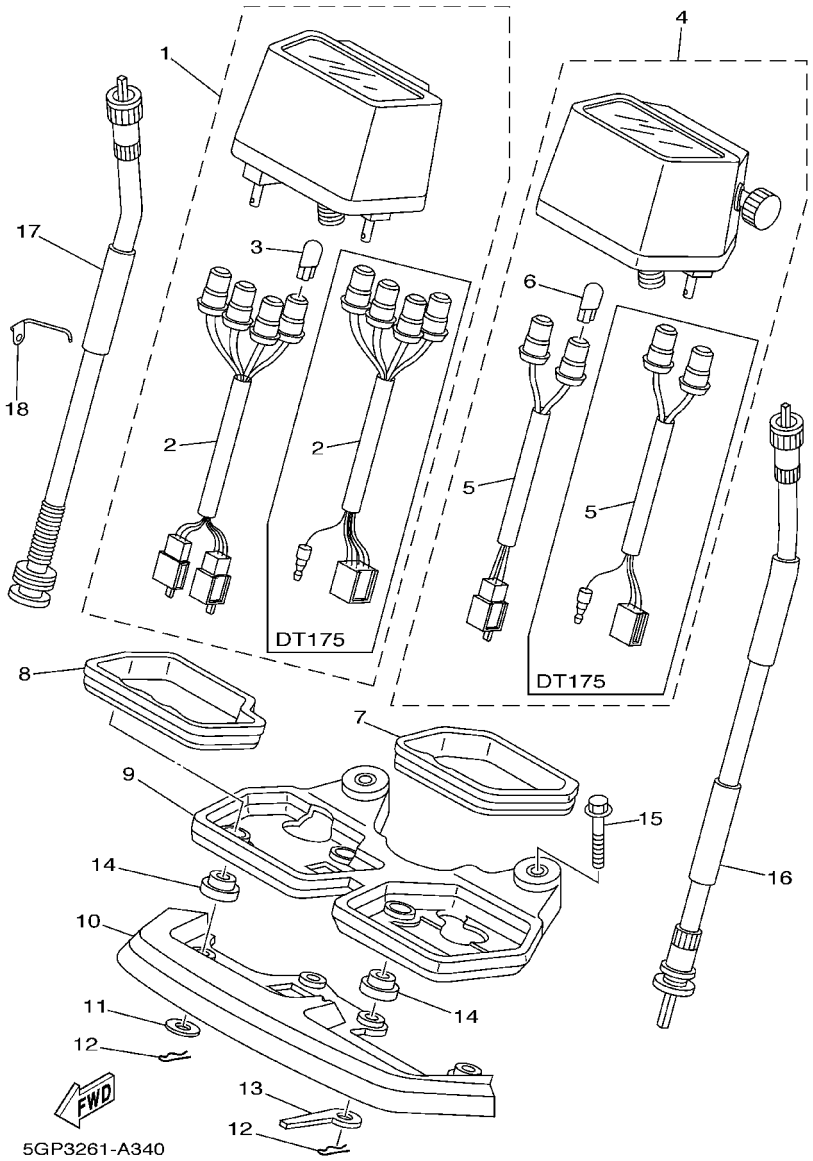


## FIG. 34 MEDIDOR

| REF. NO. | CODIGO NO. | DESCRIPCION | 5GP3 | 3TK7 | | | | OBSERVACION |
|---|---|---|---|---|---|---|---|---|
| 1 | 3TT–83540–10 | TACOMETRO COMPLETO | 1 | | | | | |
| | 3FJ–83540–10 | TACOMETRO COMPLETO | | 1 | | | | |
| 2 | 3TT–83520–00 | .ENCASTRE COMPLETO | 1 | | | | | |
| | 18G–83520–00 | .ENCASTRE COMPLETO | | 1 | | | | |
| 3 | 4R0–83517–00 | .AMPOLLETA (12V–3.4W T10) | 4 | 4 | | | | |
| 4 | 3TT–83570–10 | VELOCIMETRO COMPLETO | 1 | | | | | |
| | 3FJ–83570–10 | VELOCIMETRO COMPLETO | | 1 | | | | |
| 5 | 3TT–83536–00 | .ENCASTRE DE MEDIDOR | 1 | | | | | |
| | 18G–83536–00 | .ENCASTRE DE MEDIDOR | | 1 | | | | |
| 6 | 4R0–83517–00 | .AMPOLLETA (12V–3.4W T10) | 2 | 2 | | | | |
| 7 | 5Y1–83513–00 | AMORTIGUADOR | 1 | 1 | | | | |
| 8 | 5Y1–83541–00 | AMORTIGUADOR | 1 | 1 | | | | |
| 9 | 5Y1–83519–00 | SOPORTE DE MEDIDOR | 1 | 1 | | | | |
| 10 | 18G–83559–00 | CUBIERTA DE MEDIDOR | 1 | 1 | | | | |
| 11 | 90201–05033 | ARANDELA PLANA | 2 | 2 | | | | |
| 12 | 437–83525–00 | PRESILLA | 4 | 4 | | | | |
| 13 | 18G–83524–00 | ARANDELA ESPECIAL | 2 | 2 | | | | |
| 14 | 1M1–83526–00 | AMORTIGUADOR 2 | 4 | 4 | | | | |
| 15 | 95807–06050 | TUERCA DE REBORDE | 2 | 2 | | | | |
| 16 | 3Y0–83550–01 | CABLE DE VELOCIMETRO COMPLETO | 1 | 1 | | | | |
| 17 | 18G–83560–02 | CABLE DE TACOMETRO COMPLETO | 1 | 1 | | | | |
| 18 | 3TT–83599–00 | GUIA DE CABLE | 1 | 1 | | | | |

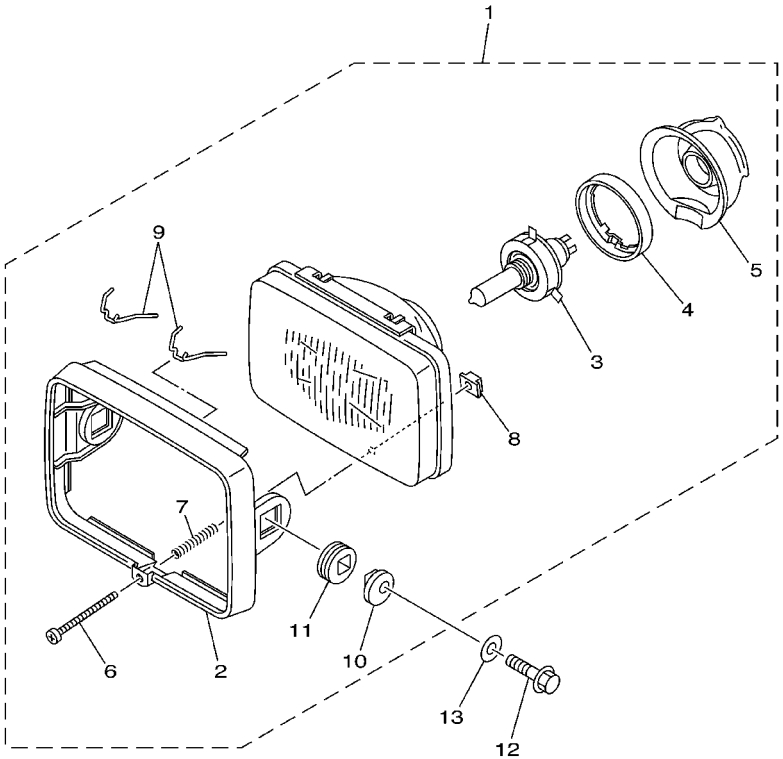

3TT5200-9390

## FIG. 35 FARO DELANTERO

| REF. NO. | CODIGO NO. | DESCRIPCION | 5GP3 | 3TK7 | | | | OBSERVACION |
|---|---|---|---|---|---|---|---|---|
| 1 | 3TT–84310–00 | UNIDAD DE FARO DELANTERO COMPL | 1 | 1 | | | | |
| 2 | 18G–84115–00 | .ARO DE FARO DELANTERO | 1 | 1 | | | | |
| 3 | 1FM–84314–H0 | .BOMBILLA DE FARO DELANTERO | 1 | 1 | | | | HALOGENOUS |
| 4 | 2F9–84375–00 | .PLACA FIXATION DE BOMBILLO | 1 | 1 | | | | |
| 5 | 2F9–84379–01 | .CUBIERTA 2 | 1 | 1 | | | | |
| 6 | 43F–84131–00 | .TORNILLO AJUSTADOR DE ARO | 1 | 1 | | | | |
| 7 | 5G2–84332–60 | .RESORTE DE TORNILLO | 1 | 1 | | | | |
| 8 | 198–84334–60 | .TUERCA DE AJUSTE | 1 | 1 | | | | |
| 9 | 1M1–84124–60 | .JUEGO DE RESORTES | 2 | 2 | | | | |
| 10 | 584–84345–60 | .AMORT DE FARO DELANTERO | 2 | 2 | | | | |
| 11 | 584–84338–60 | .COLLAR ACCESORIO DE CUERPO | 2 | 2 | | | | |
| 12 | 90105–08486 | TORNILLO | 2 | 2 | | | | |
| 13 | 90201–08612 | ARANDELA PLANA | 2 | 2 | | | | |

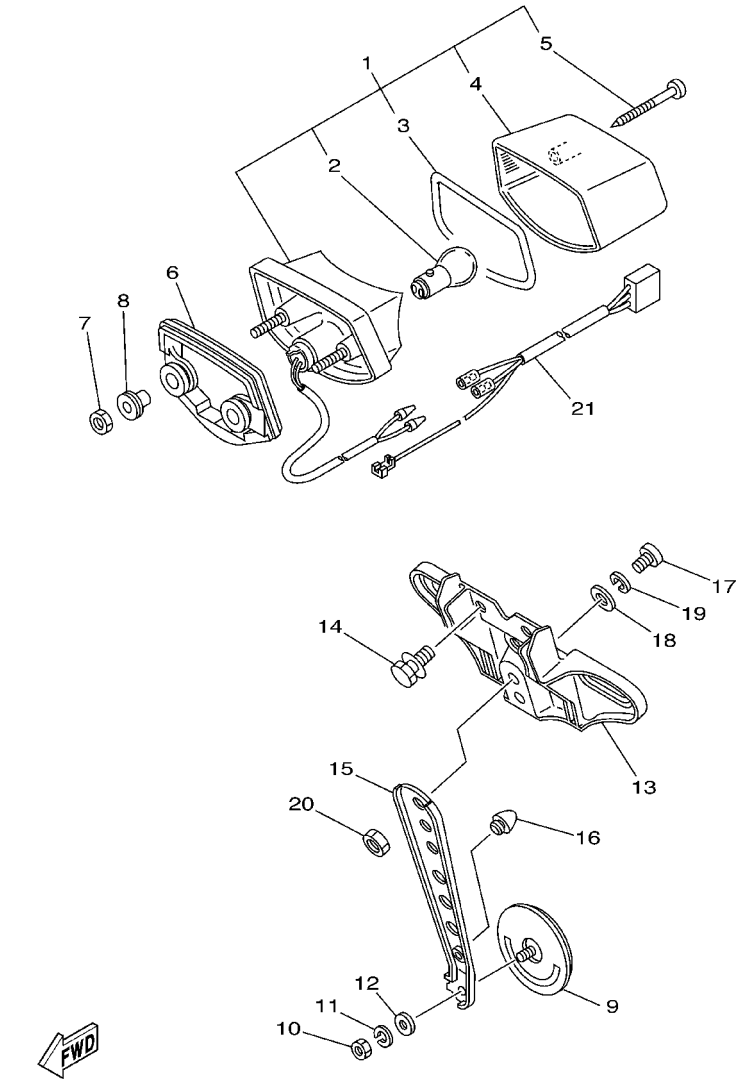


3TT5200-9400

## FIG. 36 LUZ DE COLA

| REF. NO. | CODIGO NO. | DESCRIPCION | 5GP3 | 3TK7 | | | | OBSERVACION |
|---|---|---|---|---|---|---|---|---|
| 1 | 3TK–H4710–00 | CONJT. FARO TRASERO | 1 | 1 | | | | |
| 2 | 1A2–84714–41 | .AMPOLLETA (12V–21/5W) | 1 | 1 | | | | |
| 3 | 10V–84523–00 | .EMPAQUE DE LENTE | 1 | 1 | | | | |
| 4 | 37E–84721–E1 | .LENTE DE FARO TRASERO | 1 | 1 | | | | |
| 5 | 97701–40530 | .TORNILLO ROSCA HEMBRA | 2 | 2 | | | | |
| 6 | 3TL–H4736–00 | AMORTIGUADOR DE COLA | 1 | 1 | | | | |
| 7 | 95307–06600 | TUERCA | 2 | 2 | | | | |
| 8 | 3TT–84557–00 | COLLAR | 2 | 2 | | | | |
| 9 | 3TM–H5131–00 | REFLECTOR TRASERO 1 | 1 | 1 | | | | |
| 10 | 95307–05700 | TUERCA | 1 | 1 | | | | |
| 11 | 92907–05100 | ARANDELA | 1 | 1 | | | | |
| 12 | 92907–05200 | ARANDELA | 1 | 1 | | | | |
| 13 | 3TL–H4551–00 | SOPORTE DE LICENCIA | 1 | 1 | | | | |
| 14 | 90119–06044 | TORNILLO CON ARANDELA | 3 | 3 | | | | |
| 15 | 3TL–H5132–00 | SOPORTE DE REFLECTOR 1 | 1 | 1 | | | | |
| 16 | 3TL–F1639–00 | AMORTIGUADOR 2 | 1 | 1 | | | | |
| 17 | 98507–06016 | TORNILLO DE CABEZA CON PLANA | 2 | 2 | | | | |
| 18 | 90201–062A8 | ARANDELA PLANA | 2 | 2 | | | | |
| 19 | 92907–06100 | ARANDELA | 2 | 2 | | | | |
| 20 | 95307–06600 | TUERCA | 2 | 2 | | | | |
| 21 | 3TL–H4517–10 | CABLE DE FARO TRASERO | 1 | 1 | | | | |

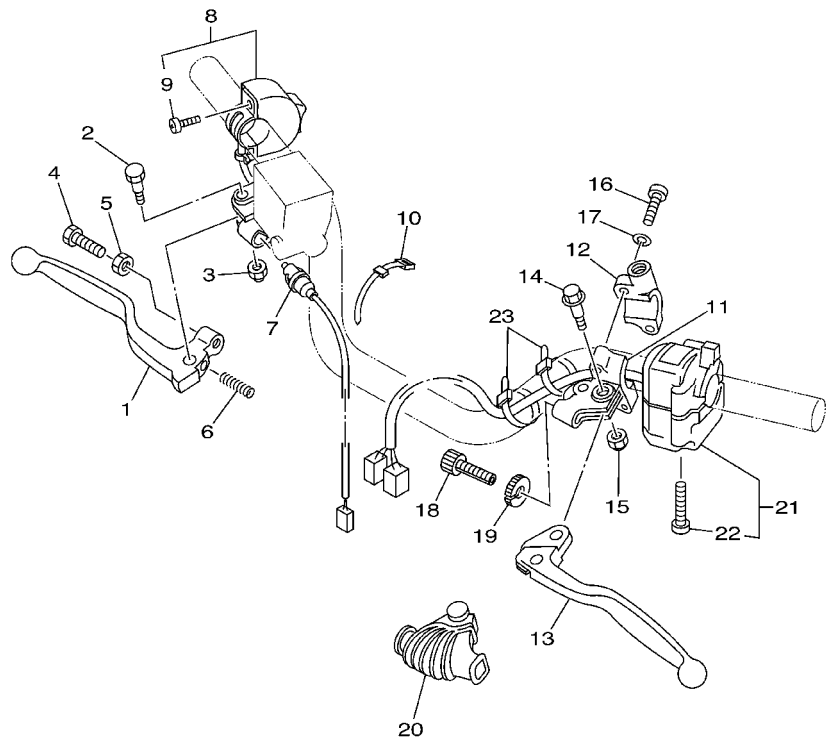

3TT5200-9420

## FIG. 37 INTERRUPTOR DE MANIJA. PALANCA

| REF. NO. | CODIGO NO. | DESCRIPCION | 5GP3 | 3TK7 | | | | OBSERVACION |
|---|---|---|---|---|---|---|---|---|
| 1 | 55Y-83922-00 | PALANCA 2 | 1 | 1 | | | | |
| 2 | 90109-06577 | PERNO | 1 | 1 | | | | |
| 3 | 95607-06100 | TUERCA AUTOBLOCANTE | 1 | 1 | | | | |
| 4 | 90149-06131 | TORNILLO DE REGLAJE | 1 | 1 | | | | |
| 5 | 90170-06010 | TUERCA | 1 | 1 | | | | |
| 6 | 90501-10312 | RESORTE DE COMPRESION | 1 | 1 | | | | |
| 7 | 3TS-83980-00 | INTERRUP.PARADA DELANTERO | 1 | 1 | | | | |
| 8 | 3TS-83976-00 | INTERRUPTOR MANIJA 1 | 1 | 1 | | | | |
| 9 | 98507-04014 | .TORNILLO DE CABEZA CON PLANA | 2 | 2 | | | | |
| 10 | 437-83936-01 | BANDA DE CABLE DE INTERRUPTOR | 2 | 2 | | | | |
| 11 | 1LN-82911-00 | SOPORTE DE LEVA 1 | 1 | 1 | | | | |
| 12 | 33G-82913-01 | SOPORTE DE LEVA INFERIOR 1 | 1 | 1 | | | | |
| 13 | 23X-83912-00 | PALANCA 1 | 1 | 1 | | | | |
| 14 | 90109-06799 | PERNO | 1 | 1 | | | | |
| 15 | 95607-06100 | TUERCA AUTOBLOCANTE | 1 | 1 | | | | |
| 16 | 98507-05020 | TORNILLO DE CABEZA CON PLANA | 2 | 2 | | | | |
| 17 | 92907-05100 | ARANDELA | 2 | 2 | | | | |
| 18 | 90123-08046 | PERNO | 1 | 1 | | | | |
| 19 | 90179-08148 | TUERCA | 1 | 1 | | | | |
| 20 | 1E6-26372-00 | CUBIERTA DE PALANCA DE MANUB 1 | 1 | 1 | | | | |
| 21 | 3TS-83972-00 | INTERRUPTOR DE MANIJA 4 | 1 | 1 | | | | |
| 22 | 98507-05030 | .TORNILLO DE CABEZA CON PLANA | 2 | 2 | | | | |
| 23 | 437-83936-01 | BANDA DE CABLE DE INTERRUPTOR | 2 | 2 | | | | |

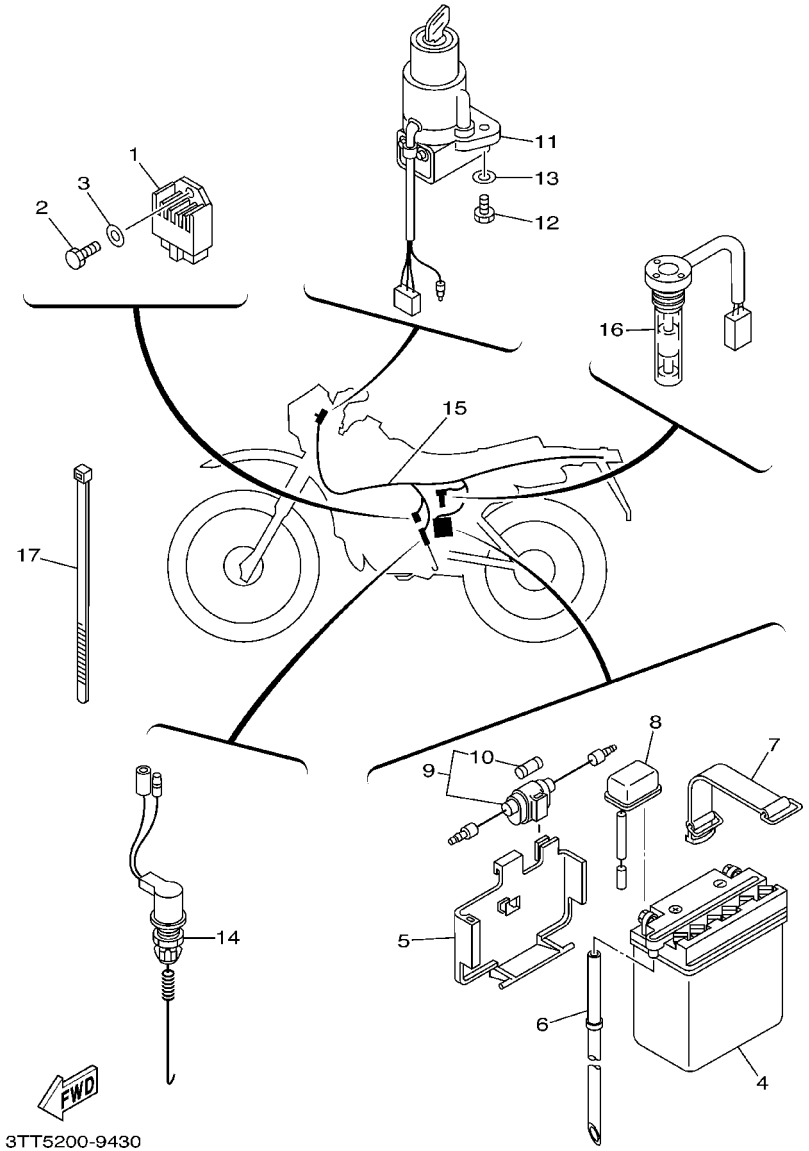


## FIG. 38 EQUIPO ELECTRICO 1

| REF. NO. | CODIGO NO. | DESCRIPCION | 5GP3 | 3TK7 | | | | OBSERVACION |
|---|---|---|---|---|---|---|---|---|
| 1 | 4CK–81960–01 | RECTIFICADOR Y REGULADOR | 1 | 1 | | | | |
| 2 | 97007–06014 | PERNO | 1 | 1 | | | | |
| 3 | 92907–06600 | ARANDELA | 1 | 1 | | | | |
| 4 | 30W–82110–01 | BATERIA COMPLETA (GM3–3B) | 1 | 1 | | | | |
| 5 | 3TL–H2122–01 | ASIENTO DE BATERIA | 1 | 1 | | | | |
| 6 | 90445–08357 | TUBO (L350) | 1 | 1 | | | | |
| 7 | 18G–82131–00 | TIRANTE DE BATERIA | 1 | 1 | | | | |
| 8 | 3TL–H2115–00 | CABLE CONDUCTOR POSITIVO | 1 | | | | | |
| | 3TL–H2115–10 | CABLE CONDUCTOR POSITIVO | | 1 | | | | |
| 9 | 55K–82150–01 | PORTA–FUSIBLES COMPLETO | 1 | 1 | | | | |
| 10 | 116–82151–00 | .FUSIBLE (10A) | 2 | 2 | | | | |
| 11 | 3TT–82501–00 | LLAVE DE IGNICION COMPLT | 1 | 1 | | | | |
| 12 | 97007–06016 | PERNO | 2 | 2 | | | | |
| 13 | 92907–06600 | ARANDELA | 2 | 2 | | | | |
| 14 | 3J0–82530–02 | INTERRUPTOR DE PARADA COMPLETO | 1 | 1 | | | | |
| 15 | 3TL–H2590–20 | CONJUNTO DE CABLES | 1 | | | | | |
| | 3TK–H2590–20 | CONJUNTO DE CABLES | | 1 | | | | |
| 16 | 3J0–85720–00 | MEDIDOR DE NIVEL DE ACEITE | 1 | 1 | | | | |
| 17 | 1UA–82591–00 | BANDA | 8 | 8 | | | | |

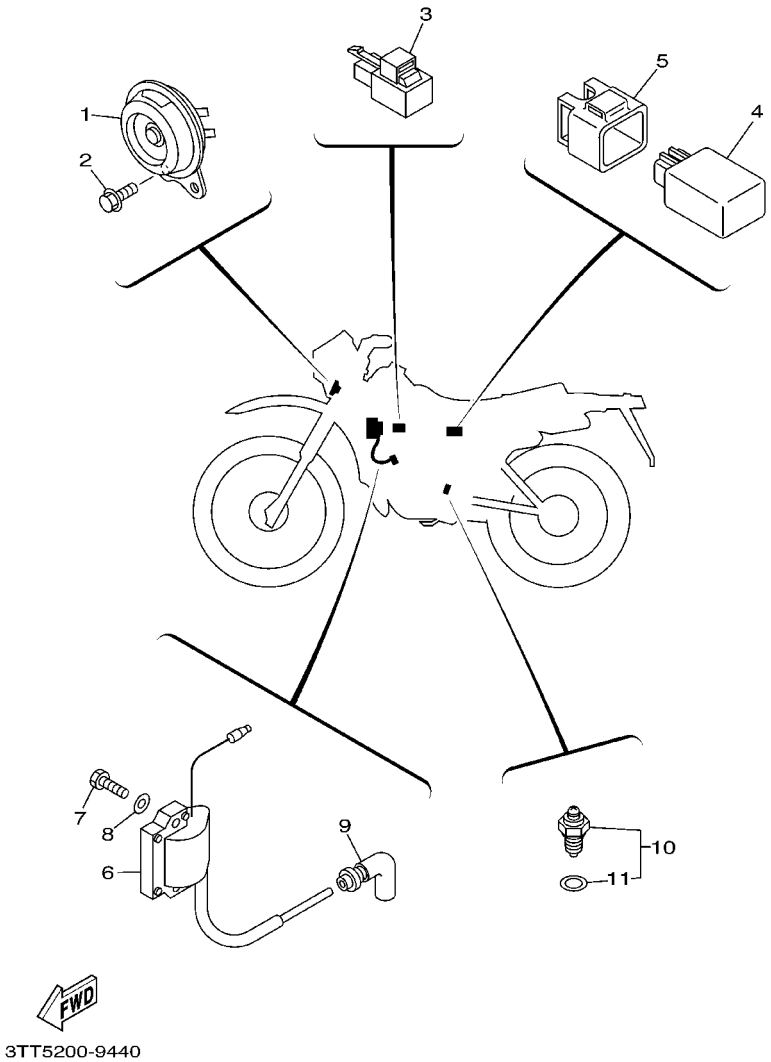


## FIG. 39 EQUIPO ELECTRICO 2

| REF. NO. | CODIGO NO. | DESCRIPCION | 5GP3 | 3TK7 | | | | OBSERVACION |
|---|---|---|---|---|---|---|---|---|
| 1 | 4GL–83371–00 | BOCINA | 1 | 1 | | | | |
| 2 | 95807–06010 | TUERCA DE REBORDE | 2 | 2 | | | | |
| 3 | 3GM–83350–01 | RELE DE DESTELLADOR COMPL. | 1 | 1 | | | | |
| 4 | 4AR–85540–00 | UNIDAD C.D.I. COMPLETA | 1 | | | | | |
| | 3TS–85540–00 | UNIDAD C.D.I. COMPLETA | | 1 | | | | |
| 5 | 3TL–H5546–00 | BANDA | 1 | 1 | | | | |
| 6 | 3TT–82310–00 | BOBINA DE ENCENDIDO COMPLETA | 1 | 1 | | | | |
| 7 | 97007–06020 | PERNO | 2 | 2 | | | | |
| 8 | 92907–06600 | ARANDELA | 2 | 2 | | | | |
| 9 | 1M1–82370–30 | TAPON DE BUJIA COMPLT | 1 | 1 | | | | |
| 10 | 136–82540–03 | INTERRUPTOR NEUTRAL COMPL | 1 | 1 | | | | |
| 11 | 136–82543–00 | .EMPAQUE | 1 | 1 | | | | |

## INDICE NUMERICO


| CODIGO NO. | REF. NO. |
|---|---|
| 18G−E4610−01 | 6 − 1 |
| 18L−E4610−01 | 6 − 1 |
| 18G−E4753−00 | 6 − 10 |
| 3TL−E5455−00 | 8 − 2 |
| 3TL−E5456−00 | 8 − 14 |
| 5GP−E5620−00 | 9 − 10 |
| 3TL−E8111−00 | 14 − 8 |
| 2E8−E8113−00 | 14 − 9 |
| 3TL−F1107−00 | 15 − 10 |
| 3TL−F1110−21−P0 | 15 − 1 |
| 3TL−F1110−21−33 | 15 − 1 |
| 3TL−F1621−00 | 16 − 8 |
| 3TL−F1638−00 | 6 − 11 |
| 3TL−F1639−00 | 36 − 16 |
| 3TS−F173E−A0 | 17 − 9 |
| 3TS−F173E−B0 | 17 − 9 |
| 3TS−F173E−C0 | 17 − 9 |
| 3TS−F173E−D0 | 17 − 9 |
| 3TT−F173E−A0 | 17 − 9 |
| 3TT−F173E−B0 | 17 − 9 |
| 3TT−F173E−C0 | 17 − 9 |
| 3TT−F173E−D0 | 17 − 9 |
| 3TS−F173F−A0 | 17 − 10 |
| 3TS−F173F−B0 | 17 − 10 |
| 3TS−F173F−C0 | 17 − 10 |
| 3TS−F173F−D0 | 17 − 10 |
| 3TT−F173F−A0 | 17 − 10 |
| 3TT−F173F−B0 | 17 − 10 |
| 3TT−F173F−C0 | 17 − 10 |
| 3TT−F173F−D0 | 17 − 10 |
| 3TL−F1751−00 | 18 − 1 |
| 3TL−F1771−00 | 18 − 2 |
| 3TK−F2110−10 | 19 − 1 |
| 3TL−F2131−00 | 19 − 29 |
| 3TL−F2141−00 | 19 − 6 |
| 3TL−F2147−00 | 19 − 28 |
| 3TL−F2151−00 | 19 − 9 |
| 3TL−F2152−00 | 19 − 10 |
| 3TL−F2178−00 | 19 − 22 |
| 3TL−F2179−00 | 19 − 20 |
| 3TL−F2187−00 | 19 − 23 |
| 3TL−F2318−00 | 19 − 11 |
| 5GP−F3174−00 | 21 − 19 |
| 3TL−F4110−10−GE | 23 − 1 |
| 3TL−F4110−10−P0 | 23 − 1 |
| 3TL−F4110−10−P4 | 23 − 1 |
| 3TL−F4110−10−P6 | 23 − 1 |
| 3TL−F4181−00 | 23 − 3 |

| CODIGO NO. | REF. NO. |
|---|---|
| 3TL−F4182−00 | 23 − 4 |
| 3TL−F4183−00 | 23 − 5 |
| 3TL−F4186−00 | 23 − 6 |
| 3TT−F4240−60 | 23 − 2 |
| 3TT−F4240−70 | 23 − 2 |
| 3TT−F4240−80 | 23 − 2 |
| 3TT−F4240−90 | 23 − 2 |
| 3NX−F4723−00 | 24 − 5 |
| 3TL−F4724−00 | 24 − 6 |
| 3TL−F4731−R0 | 24 − 2 |
| 3TL−F4734−B0 | 24 − 8 |
| 3TL−F4734−10 | 24 − 8 |
| 3TL−F4734−90 | 24 − 8 |
| 3TL−F4738−00 | 24 − 3 |
| 3TL−F4770−B0 | 24 − 1 |
| 3TL−F4770−10 | 24 − 1 |
| 3TL−F4770−90 | 24 − 1 |
| 3TL−F4830−00 | 24 − 12 |
| 5GP−F5104−00 | 25 − 6 |
| 5GP−F5181−00 | 25 − 13 |
| 5GP−F5304−00 | 27 − 17 |
| 5GP−F5381−00 | 27 − 31 |
| 3TL−F5388−00 | 27 − 26 |
| 3TL−F5389−00 | 27 − 27 |
| 3TL−F5412−00 | 27 − 23 |
| 3TL−F5447−00 | 27 − 22 |
| 3TK−F5449−00 | 27 − 22 |
| 3TK−F6111−00 | 28 − 1 |
| 3TL−F6241−00 | 28 − 7 |
| 3TL−F6242−00 | 28 − 5 |
| 3TK−F6243−00 | 28 − 4 |
| 3TL−F6249−00 | 28 − 6 |
| 4E9−F6290−00 | 28 − 2 |
| 4E9−F6290−10 | 28 − 3 |
| 3TL−F7211−00 | 30 − 1 |
| 1YX−F7231−00 | 30 − 5 |
| 21K−F7311−00 | 30 − 12 |
| 31U−F7411−00−90 | 30 − 16 |
| 31U−F7421−00−90 | 30 − 17 |
| 3TL−F7430−00 | 30 − 23 |
| 59L−F7433−00 | 30 − 24 |
| | 30 − 29 |
| 3TL−F7440−00 | 30 − 28 |
| 3TL−F8100−10 | 15 − 13 |
| 3TK−F8351−00−P0 | 31 − 1 |
| 3TL−F8361−00 | 31 − 4 |
| 3TT−F8391−00 | 31 − 2 |
| 3TT−F8391−10 | 31 − 2 |

| CODIGO NO. | REF. NO. |
|---|---|
| 3TT−F8391−20 | 31 − 2 |
| 3TT−F8391−30 | 31 − 2 |
| 3TL−H2115−00 | 38 − 8 |
| 3TL−H2115−10 | 38 − 8 |
| 3TL−H2122−01 | 38 − 5 |
| 3TK−H2590−20 | 38 − 15 |
| 3TL−H2590−20 | 38 − 15 |
| 3TL−H3310−00 | 33 − 1 |
| 3TL−H3311−00 | 33 − 4 |
| | 33 − 8 |
| | 33 − 13 |
| | 33 − 17 |
| 3TL−H3312−00 | 33 − 2 |
| 3TL−H3317−00 | 33 − 3 |
| | 33 − 7 |
| | 33 − 12 |
| | 33 − 16 |
| 3TL−H3320−00 | 33 − 5 |
| 3TL−H3322−00 | 33 − 6 |
| 3TL−H3330−00 | 33 − 10 |
| 3TL−H3332−00 | 33 − 11 |
| 3TL−H3340−00 | 33 − 14 |
| 3TL−H3342−00 | 33 − 15 |
| 3TL−H3365−00 | 33 − 19 |
| 3TL−H4517−10 | 36 − 21 |
| 3TL−H4551−00 | 36 − 13 |
| 3TK−H4710−00 | 36 − 1 |
| 3TL−H4736−00 | 36 − 6 |
| 3TM−H5131−00 | 36 − 9 |
| 3TL−H5132−00 | 36 − 15 |
| 3TL−H5546−00 | 39 − 5 |
| 3RW−W0041−02 | 29 − 2 |
| 4JG−W0045−00 | 26 − 8 |
| 4JG−W0047−00 | 26 − 5 |
| 51L−W0048−00 | 26 − 10 |
| 4JG−W0057−00 | 26 − 4 |
| 3H3−W0092−00 | 23 − 9 |
| 3KG−W2536−00 | 27 − 9 |
| 18G−11111−00 | 1 − 1 |
| 18L−11111−00 | 1 − 1 |
| 18G−11127−00 | 1 − 9 |
| 18G−11128−00 | 1 − 5 |
| 18G−11161−00 | 1 − 3 |
| 363−11161−00 | 1 − 2 |
| 18G−11162−00 | 1 − 4 |
| 4F2−11162−00 | 1 − 2 |
| 2A6−11181−00 | 1 − 10 |
| 2A7−11181−10 | 1 − 10 |

| CODIGO NO. | REF. NO. |
|---|---|
| 18G−11311−01 | 1 − 6 |
| 18L−11311−00 | 1 − 6 |
| 18G−11351−02 | 1 − 12 |
| 3TN−11351−00 | 1 − 12 |
| 18G−11400−00 | 2 − 1 |
| 1W1−11412−01 | 2 − 2 |
| 1W1−11422−01 | 2 − 3 |
| 3TK−11603−00 | 2 − 9 |
| 3TL−11603−00 | 2 − 9 |
| 3TK−11604−00 | 2 − 9 |
| 3TL−11604−00 | 2 − 9 |
| 3TK−11605−00 | 2 − 9 |
| 3TL−11605−00 | 2 − 9 |
| 18G−11631−01−96 | 2 − 8 |
| 18L−11631−00−97 | 2 − 8 |
| 251−11633−00 | 2 − 11 |
| 4Y2−11633−00 | 2 − 11 |
| 18G−11635−01 | 2 − 8 |
| 18L−11635−00 | 2 − 8 |
| 18G−11636−01 | 2 − 8 |
| 18L−11636−00 | 2 − 8 |
| 4Y2−11651−00 | 2 − 4 |
| 3M5−11681−00 | 2 − 5 |
| 18G−13101−00 | 3 − 1 |
| 18L−13101−00 | 3 − 1 |
| 126−13116−01 | 3 − 15 |
| 363−13133−01 | 3 − 22 |
| 137−13137−00−03 | 3 − 8 |
| 137−13137−00−05 | 3 − 8 |
| 137−13137−00−10 | 3 − 8 |
| 137−13138−01 | 3 − 7 |
| 18G−13174−00 | 3 − 30 |
| 275−13175−01 | 3 − 13 |
| 522−13175−01 | 3 − 13 |
| 137−13176−00 | 3 − 18 |
| 2A6−13178−00 | 3 − 19 |
| 402−13552−00 | 3 − 2 |
| 10V−13565−01 | 4 − 7 |
| 18G−13581−00 | 4 − 25 |
| 18G−13584−00 | 4 − 27 |
| 10V−13610−01 | 4 − 1 |
| 10V−13613−01 | 4 − 2 |
| 10V−13616−01 | 4 − 3 |
| 3TT−13621−00 | 4 − 6 |
| 3TK−14101−00 | 5 − 1 |
| 3TL−14101−01 | 5 − 1 |
| 18G−14103−00 | 5 − 15 |
| 10W−14104−00 | 5 − 20 |

| CODIGO NO. | REF. NO. |
|---|---|
| 10X−14106−00 | 5 − 16 |
| 314−14112−15 | 5 − 18 |
| 314−14112−25 | 5 − 18 |
| 500−14115−00 | 5 − 12 |
| 2A6−14126−00 | 5 − 21 |
| 2N4−14131−00 | 5 − 22 |
| 2F5−14141−36 | 5 − 9 |
| 2F5−14141−38 | 5 − 9 |
| 260−14142−22 | 5 − 2 |
| 260−14142−25 | 5 − 2 |
| 137−14143−33 | 5 − 3 |
| 137−14143−34 | 5 − 3 |
| 2N4−14145−00 | 5 − 11 |
| 214−14147−00 | 5 − 10 |
| 558−14147−00 | 5 − 13 |
| 1M1−14169−00 | 5 − 19 |
| 4U5−14171−00 | 5 − 17 |
| 304−14184−00 | 5 − 14 |
| 314−14185−00 | 5 − 7 |
| 127−14186−00 | 5 − 5 |
| 1V0−14190−25 | 5 − 4 |
| 10V−14190−20 | 5 − 4 |
| 214−14195−00 | 5 − 6 |
| 183−14196−00 | 5 − 23 |
| 18G−1441K−00 | 4 − 26 |
| 18G−14411−00 | 4 − 11 |
| 18G−14412−00 | 4 − 12 |
| 3TK−14451−00 | 4 − 13 |
| 18G−14452−00 | 4 − 16 |
| 18G−14453−01 | 4 − 17 |
| 18G−14458−00 | 4 − 14 |
| 18G−14465−00 | 4 − 28 |
| 3TK−14472−00 | 4 − 20 |
| 18G−14493−00 | 4 − 15 |
| 3PA−14613−10 | 6 − 2 |
| 1W2−14714−00 | 6 − 15 |
| 18G−14718−00 | 6 − 7 |
| 10V−14758−00 | 6 − 17 |
| 2A6−14772−00 | 6 − 4 |
| 18G−1490J−00 | 5 − 8 |
| 18L−1490J−00 | 5 − 8 |
| 18L−15111−01 | 7 − 1 |
| 2A6−15111−03 | 7 − 1 |
| 18L−15121−01 | 7 − 2 |
| 2A6−15121−02 | 7 − 2 |
| 304−15128−00 | 7 − 16 |
| 328−15316−00 | 7 − 5 |
| 401−15317−00 | 7 − 6 |

| CODIGO NO. | REF. NO. |
|---|---|
| 18G−15362−00 | 8 − 11 |
| 2N4−15371−00 | 7 − 12 |
| 1W1−15381−00 | 11 − 25 |
| 2A7−15411−01 | 8 − 1 |
| 18G−15416−00 | 8 − 13 |
| 18G−15431−01 | 8 − 6 |
| 18G−15451−03 | 8 − 7 |
| 2A6−15484−01 | 8 − 5 |
| 1W1−15618−01 | 9 − 17 |
| 156−15618−01 | 9 − 16 |
| 1W1−15621−01 | 9 − 11 |
| 1W1−15641−00 | 9 − 2 |
| 525−15651−00 | 9 − 7 |
| 4F2−15660−01 | 9 − 1 |
| 1W1−15666−00 | 9 − 6 |
| 401−15676−00 | 9 − 4 |
| 2A6−16111−00 | 10 − 1 |
| 2JK−16111−01 | 10 − 1 |
| 3TL−16150−00 | 10 − 4 |
| 598−16321−01 | 10 − 7 |
| 1V1−16324−00 | 10 − 8 |
| 18G−16351−00 | 10 − 9 |
| 1W1−16356−02 | 10 − 17 |
| 2X3−16357−00 | 10 − 20 |
| 1W1−16358−01 | 10 − 16 |
| 18G−16371−00 | 10 − 6 |
| 18L−16371−00 | 10 − 6 |
| 18G−16380−02 | 10 − 22 |
| 4J3−17121−00 | 11 − 2 |
| 4J3−17131−00 | 11 − 3 |
| 4J3−17151−01 | 11 − 4 |
| 4J3−17161−00 | 11 − 5 |
| 4J3−17211−00 | 11 − 9 |
| 4J3−17221−00 | 11 − 10 |
| 4J3−17231−00 | 11 − 11 |
| 4J3−17241−00 | 11 − 12 |
| 4J3−17251−00 | 11 − 13 |
| 4J3−17261−00 | 11 − 14 |
| 4J3−17411−00 | 11 − 1 |
| 137−17417−00−05 | 9 − 8 |
| 137−17417−00−06 | 9 − 8 |
| 137−17417−00−07 | 9 − 8 |
| 137−17417−00−10 | 9 − 8 |
| 137−17417−00−12 | 9 − 8 |
| 2A6−17421−00 | 11 − 8 |
| 1W1−17471−01 | 11 − 27 |
| 2A6−17831−01 | 12 − 2 |
| 2A6−17841−00 | 12 − 5 |

## INDICE NUMERICO


| CODIGO NO. | REF. NO. |
|---|---|
| 248−17861−00 | 12 − 1 |
| 4F2−18101−02 | 14 − 5 |
| 4F2−18120−00 | 14 − 1 |
| 1W1−18140−00 | 13 − 13 |
| 401−18178−00 | 14 − 6 |
| 1W1−18185−00 | 13 − 3 |
| 1W1−18197−01 | 14 − 15 |
| 2A6−18511−00 | 13 − 9 |
| 2A6−18512−00 | 13 − 10 |
| 2A6−18531−00 | 13 − 11 |
| 2A6−18535−00 | 13 − 12 |
| 1W1−18540−00 | 13 − 1 |
| 136−18542−00 | 13 − 2 |
| 1W1−18561−00 | 13 − 5 |
| 5H0−21308−01 | 15 − 8 |
| 4BE−21511−00 | 16 − 1 |
| 4BE−21511−10 | 16 − 1 |
| 4BE−21511−20 | 16 − 1 |
| 37N−21611−20 | 16 − 4 |
| 37N−21611−50 | 16 − 4 |
| 18G−21620−20 | 16 − 6 |
| 168−21638−00 | 6 − 11 |
| 2A6−21639−00 | 16 − 7 |
| 3TL−21708−00 | 17 − 4 |
| 18G−21711−10 | 17 − 1 |
| 18G−21711−20 | 17 − 1 |
| 18G−21721−10 | 17 − 3 |
| 18G−21721−20 | 17 − 3 |
| 3TT−2174G−00 | 17 − 11 |
| 3TT−2174H−00 | 17 − 12 |
| 18G−22124−00 | 19 − 3 |
| 401−22127−00 | 19 − 4 |
| 1W1−22128−00 | 20 − 8 |
| 401−22128−01 | 19 − 5 |
| 18G−22210−02 | 20 − 1 |
| 3R4−22226−00 | 20 − 3 |
| 4F2−22311−01 | 19 − 15 |
| 3TS−23102−00 | 22 − 1 |
| 3TS−23103−00 | 22 − 18 |
| 3TS−23106−00 | 22 − 2 |
| 3TS−23107−00 | 22 − 19 |
| 18G−23110−00 | 22 − 7 |
| | 22 − 24 |
| 1U6−23111−M1 | 22 − 15 |
| | 22 − 32 |
| 240−23114−00 | 22 − 16 |
| | 22 − 33 |
| 5N8−23118−00 | 22 − 14 |
| 5N8−23118−00 | 22 − 31 |
| 1H3−23125−00 | 22 − 6 |
| | 22 − 23 |
| 18G−23128−00 | 22 − 39 |
| 18G−23141−00 | 22 − 12 |
| | 22 − 29 |
| 3R2−23144−00 | 22 − 5 |
| | 22 − 22 |
| 1T3−23145−00 | 22 − 4 |
| | 22 − 21 |
| 3DM−23149−10 | 22 − 13 |
| | 22 − 30 |
| 4A1−23156−00 | 22 − 3 |
| | 22 − 20 |
| 509−23158−L0 | 22 − 10 |
| | 22 − 27 |
| 1U6−23168−M0 | 22 − 17 |
| | 22 − 34 |
| 18G−23170−00 | 22 − 9 |
| | 22 − 26 |
| 1W1−23173−L0 | 22 − 8 |
| | 22 − 25 |
| 278−23181−50 | 22 − 11 |
| | 22 − 28 |
| 18G−23191−00 | 22 − 36 |
| 18G−23192−00 | 22 − 37 |
| 509−23194−L0 | 22 − 38 |
| 10V−2331E−02 | 22 − 40 |
| 18G−2331E−00 | 21 − 21 |
| 34X−23317−00 | 21 − 15 |
| 3TS−23340−00 | 22 − 35 |
| 156−2341E−00 | 21 − 7 |
| 22F−2341E−00 | 21 − 10 |
| 156−23411−00 | 22 − 43 |
| 22F−23411−01 | 21 − 8 |
| 156−23412−00 | 21 − 6 |
| 22F−23412−01 | 21 − 9 |
| 583−23416−01 | 21 − 11 |
| 3TS−23435−00 | 21 − 1 |
| 1E6−23441−10−98 | 21 − 4 |
| 164−23462−00 | 22 − 44 |
| 3TB−23467−01 | 28 − 26 |
| 18G−24500−02 | 23 − 8 |
| 2W6−24512−00 | 23 − 11 |
| 2G2−24522−00 | 23 − 13 |
| 11H−24602−03 | 23 − 20 |
| 34X−25111−02−35 | 25 − 1 |
| 148−25115−00 | 27 − 3 |
| 322−25118−00 | 25 − 12 |
| 1E2−25155−00 | 27 − 11 |
| 34X−25190−01 | 25 − 15 |
| 10V−25311−00−35 | 27 − 1 |
| 10V−25321−00−35 | 27 − 7 |
| 3Y6−2533A−01 | 27 − 8 |
| 248−25351−10 | 27 − 14 |
| 148−25359−00 | 27 − 15 |
| 401−25367−00 | 27 − 30 |
| 1T2−25394−00 | 27 − 21 |
| 4JG−2580T−00 | 26 − 3 |
| 4JG−2582T−10 | 26 − 1 |
| 4GY−25852−01 | 29 − 4 |
| 5RB−25854−00 | 29 − 3 |
| 3RW−25867−00 | 29 − 6 |
| 5RS−25870−00 | 29 − 1 |
| 3TS−25872−00 | 29 − 9 |
| 3RW−25875−00 | 29 − 12 |
| 34X−25876−00 | 21 − 13 |
| 36Y−2589H−00 | 29 − 5 |
| 5JW−25914−00 | 26 − 6 |
| 4TT−25919−00 | 26 − 9 |
| 4TT−25937−00 | 26 − 7 |
| 4RR−26129−00 | 28 − 8 |
| 2T5−26244−00 | 28 − 18 |
| 3J0−26261−00 | 28 − 12 |
| 3J0−26262−00 | 28 − 13 |
| 2T5−26267−00 | 28 − 19 |
| 3J0−26272−00 | 28 − 15 |
| 2T5−26273−00 | 28 − 17 |
| 2T5−26274−00 | 28 − 16 |
| 5X2−2628H−01 | 28 − 32 |
| 5X2−26281−00 | 28 − 30 |
| 322−26282−00 | 28 − 31 |
| 3TS−26311−00 | 28 − 9 |
| 3J1−26312−01 | 28 − 10 |
| 18G−26321−10 | 28 − 11 |
| 18L−26321−10 | 28 − 11 |
| 156−26329−00 | 28 − 14 |
| 3TS−26335−00 | 28 − 23 |
| 1E6−26342−00 | 28 − 24 |
| 1E6−26372−00 | 37 − 20 |
| 1T5−26372−00 | 28 − 25 |
| 3J0−26393−00 | 28 − 22 |
| 18G−28351−10 | 31 − 1 |
| 18G−28351−20 | 31 − 1 |
| 104−81328−20 | 32 − 6 |
| 4CK−81960−01 | 38 − 1 |
| 30W−82110−01 | 38 − 4 |
| 18G−82131−00 | 38 − 7 |
| 55K−82150−01 | 38 − 9 |
| 116−82151−00 | 38 − 10 |
| 3TT−82310−00 | 39 − 6 |
| 1M1−82370−30 | 39 − 9 |
| 3TT−82501−00 | 38 − 11 |
| 3J0−82530−02 | 38 − 14 |
| 136−82540−03 | 39 − 10 |
| 136−82543−00 | 39 − 11 |
| 1UA−82591−00 | 28 − 35 |
| | 38 − 17 |
| 1LN−82911−00 | 37 − 11 |
| 33G−82913−01 | 37 − 12 |
| 3GM−83350−01 | 39 − 3 |
| 4GL−83371−00 | 39 − 1 |
| 5Y1−83513−00 | 34 − 7 |
| 4R0−83517−00 | 34 − 3 |
| | 34 − 6 |
| 5Y1−83519−00 | 34 − 9 |
| 18G−83520−00 | 34 − 2 |
| 3TT−83520−00 | 34 − 2 |
| 18G−83524−00 | 34 − 13 |
| 437−83525−00 | 34 − 12 |
| 1M1−83526−00 | 34 − 14 |
| 18G−83536−00 | 34 − 5 |
| 3TT−83536−00 | 34 − 5 |
| 3FJ−83540−10 | 34 − 1 |
| 3TT−83540−10 | 34 − 1 |
| 5Y1−83541−00 | 34 − 8 |
| 3Y0−83550−01 | 34 − 16 |
| 18G−83559−00 | 34 − 10 |
| 18G−83560−02 | 34 − 17 |
| 3FJ−83570−10 | 34 − 4 |
| 3TT−83570−10 | 34 − 4 |
| 3TT−83599−00 | 34 − 18 |
| 23X−83912−00 | 37 − 13 |
| 55Y−83922−00 | 37 − 1 |
| 437−83936−01 | 37 − 10 |
| | 37 − 23 |
| 437−83936−11 | 28 − 36 |
| 3TS−83972−00 | 37 − 21 |
| 3TS−83976−00 | 37 − 8 |
| 3TS−83980−00 | 37 − 7 |
| 18G−84115−00 | 35 − 2 |
| 1M1−84124−60 | 35 − 9 |
| 43F−84131−00 | 35 − 6 |
| 3TT−84310−00 | 35 − 1 |
| 1FM−84314−H0 | 35 − 3 |
| 5G2−84332−60 | 35 − 7 |
| 198−84334−60 | 35 − 8 |
| 584−84338−60 | 35 − 11 |
| 584−84345−60 | 35 − 10 |
| 2F9−84375−00 | 35 − 4 |
| 2F9−84379−01 | 35 − 5 |
| 10V−84523−00 | 36 − 3 |
| 3TT−84557−00 | 36 − 8 |
| 1A2−84714−41 | 36 − 2 |
| 37E−84721−E1 | 36 − 4 |
| 3TS−85510−00 | 32 − 2 |
| 3TT−85510−00 | 32 − 2 |
| 3FJ−85512−00 | 32 − 3 |
| 3FJ−85513−00 | 32 − 4 |
| 3TS−85540−00 | 39 − 4 |
| 4AR−85540−00 | 39 − 4 |
| 3FJ−85550−00 | 32 − 1 |
| 4AR−85550−00 | 32 − 1 |
| 18G−85580−20 | 32 − 5 |
| 3FJ−85580−00 | 32 − 5 |
| 3J0−85720−00 | 38 − 16 |
| 90101−06278 | 27 − 12 |
| 90101−06529 | 15 − 11 |
| 90105−08099 | 15 − 2 |
| 90105−08120 | 15 − 3 |
| 90105−08486 | 35 − 12 |
| 90105−10037 | 15 − 4 |
| 90105−10638 | 26 − 11 |
| 90105−14220 | 21 − 2 |
| 90109−063F7 | 13 − 14 |
| 90109−065G4 | 26 − 2 |
| 90109−06577 | 37 − 2 |
| 90109−06799 | 37 − 14 |
| 90109−10453 | 20 − 4 |
| 90109−10473 | 30 − 14 |
| 90109−10533 | 19 − 26 |
| 90116−06016 | 1 − 8 |
| 90116−08394 | 1 − 7 |
| 90116−10278 | 1 − 13 |
| 90116−10279 | 1 − 14 |
| 90116−10390 | 27 − 25 |
| 90119−05020 | 10 − 11 |
| 90119−05059 | 19 − 18 |
| 90119−05193 | 19 − 31 |
| 90119−06018 | 29 − 13 |
| 90119−06044 | 16 − 5 |
| | 16 − 9 |
| 90119−06044 | 31 − 3 |
| | 36 − 14 |
| 90119−06056 | 4 − 29 |
| 90119−06063 | 16 − 2 |
| 90122−06001 | 18 − 7 |
| 90123−08046 | 37 − 18 |
| 90149−06011 | 23 − 14 |
| 90149−06131 | 37 − 4 |
| 90149−08108 | 10 − 26 |
| 90149−08111 | 14 − 11 |
| 90157−08131 | 7 − 17 |
| 90159−05018 | 19 − 19 |
| 90159−06013 | 17 − 2 |
| | 31 − 5 |
| 90167−03004 | 28 − 20 |
| 90170−06010 | 37 − 5 |
| 90170−08029 | 14 − 12 |
| 90170−10219 | 27 − 24 |
| 90170−12347 | 32 − 14 |
| 90170−14171 | 10 − 15 |
| 90170−22187 | 17 − 6 |
| 90175−06013 | 30 − 11 |
| 90179−06013 | 18 − 8 |
| 90179−08148 | 37 − 19 |
| 90179−08299 | 1 − 11 |
| 90179−10279 | 1 − 16 |
| 90179−12659 | 10 − 3 |
| 90179−16226 | 11 − 32 |
| 90179−25033 | 21 − 12 |
| 90185−08089 | 15 − 6 |
| 90185−10037 | 30 − 15 |
| 90185−12046 | 19 − 7 |
| 90201−05033 | 34 − 11 |
| 90201−062A8 | 36 − 18 |
| 90201−08612 | 35 − 13 |
| 90201−08624 | 3 − 14 |
| 90201−10118 | 29 − 11 |
| 90201−10123 | 12 − 3 |
| 90201−12163 | 12 − 6 |
| | 14 − 16 |
| 90201−12541 | 9 − 14 |
| 90201−12593 | 32 − 15 |
| 90201−14212 | 30 − 3 |
| 90201−14217 | 10 − 24 |
| 90201−15700 | 11 − 18 |
| 90201−17550 | 10 − 5 |
| | 10 − 13 |
| 90201−20266 | 11 − 6 |

## INDICE NUMERICO


| CODIGO NO. | REF. NO. |
|---|---|
| 90201−20279 | 30 − 25 |
| | 30 − 30 |
| 90201−22555 | 11 − 15 |
| 90202−05187 | 6 − 9 |
| | 6 − 19 |
| 90202−05193 | 23 − 15 |
| 90204−12007 | 10 − 2 |
| 90209−18135 | 11 − 16 |
| 90209−22071 | 2 − 6 |
| 90215−08014 | 14 − 13 |
| 90215−14122 | 10 − 14 |
| 90215−16127 | 11 − 31 |
| 90240−06006 | 30 − 6 |
| 90240−06052 | 30 − 26 |
| | 30 − 31 |
| 90240−08084 | 30 − 19 |
| 90240−12092 | 20 − 9 |
| 90249−12008 | 30 − 10 |
| 90280−03017 | 2 − 19 |
| 90282−05005 | 2 − 20 |
| 90338−09130 | 25 − 10 |
| 90338−18122 | 15 − 12 |
| 90340−12005 | 7 − 14 |
| 90380−12051 | 20 − 2 |
| 90381−08002 | 12 − 4 |
| 90386−18028 | 19 − 2 |
| 90387−05682 | 19 − 30 |
| 90387−06681 | 16 − 3 |
| 90387−07391 | 4 − 19 |
| | 18 − 9 |
| 90387−093H1 | 6 − 12 |
| 90387−15600 | 25 − 11 |
| 90387−157F0 | 27 − 28 |
| | 27 − 29 |
| 90387−202A0 | 11 − 29 |
| 90387−20488 | 2 − 18 |
| 90401−10159 | 29 − 10 |
| 90430−04004 | 3 − 5 |
| 90430−08216 | 10 − 25 |
| 90430−12227 | 7 − 15 |
| 90445−05681 | 3 − 11 |
| 90445−057G5 | 28 − 29 |
| 90445−07340 | 7 − 13 |
| 90445−083J4 | 3 − 27 |
| 90445−083J7 | 18 − 3 |
| 90445−08357 | 38 − 6 |
| 90445−095A1 | 23 − 17 |
| 90445−104H8 | 23 − 16 |

| CODIGO NO. | REF. NO. |
|---|---|
| 90450−44046 | 4 − 8 |
| 90460−37026 | 6 − 16 |
| 90460−49058 | 4 − 21 |
| 90467−08075 | 3 − 28 |
| | 3 − 29 |
| | 18 − 4 |
| | 23 − 19 |
| 90467−09006 | 23 − 18 |
| 90467−13073 | 4 − 31 |
| 90467−20050 | 4 − 30 |
| 90468−02033 | 3 − 12 |
| | 3 − 26 |
| 90468−08086 | 3 − 25 |
| 90468−26183 | 9 − 3 |
| 90480−12053 | 17 − 7 |
| 90480−13197 | 17 − 8 |
| 90480−13253 | 18 − 6 |
| 90480−14102 | 4 − 18 |
| | 18 − 10 |
| 90480−18171 | 4 − 22 |
| | 18 − 5 |
| 90480−24186 | 17 − 5 |
| 90501−02217 | 3 − 4 |
| 90501−05512 | 28 − 21 |
| 90501−10245 | 30 − 9 |
| 90501−10312 | 37 − 6 |
| 90501−10459 | 9 − 12 |
| 90501−20568 | 10 − 10 |
| 90506−08155 | 14 − 2 |
| 90506−09156 | 13 − 15 |
| 90506−15260 | 27 − 10 |
| 90507−29042 | 30 − 13 |
| 90508−20023 | 30 − 18 |
| 90508−20345 | 10 − 23 |
| 90508−26450 | 9 − 5 |
| 90508−32349 | 14 − 3 |
| 90508−32354 | 30 − 2 |
| 90508−35350 | 19 − 27 |
| 90560−15290 | 25 − 3 |
| 90560−15313 | 27 − 2 |
| 90560−17147 | 10 − 12 |
| 91317−06010 | 21 − 14 |
| 91317−08025 | 9 − 18 |
| 91401−20012 | 30 − 8 |
| | 30 − 27 |
| | 30 − 32 |
| 91401−20025 | 20 − 7 |
| 91401−25015 | 30 − 20 |

| CODIGO NO. | REF. NO. |
|---|---|
| 91401−25020 | 20 − 11 |
| 92017−08016 | 30 − 33 |
| 92502−06008 | 23 − 12 |
| 92901−04100 | 32 − 8 |
| | 32 − 11 |
| 92901−05100 | 3 − 9 |
| 92901−06100 | 22 − 42 |
| 92902−04100 | 5 − 25 |
| 92907−03100 | 4 − 5 |
| 92907−04600 | 28 − 28 |
| 92907−05100 | 36 − 11 |
| | 37 − 17 |
| 92907−05200 | 36 − 12 |
| 92907−05600 | 19 − 17 |
| | 21 − 17 |
| 92907−06100 | 4 − 24 |
| | 36 − 19 |
| 92907−06200 | 10 − 18 |
| | 30 − 7 |
| 92907−06600 | 4 − 10 |
| | 19 − 13 |
| | 29 − 8 |
| | 32 − 13 |
| | 38 − 3 |
| | 38 − 13 |
| | 39 − 8 |
| 92907−08100 | 6 − 14 |
| 92907−08200 | 15 − 5 |
| | 24 − 9 |
| 92907−08600 | 3 − 23 |
| | 24 − 11 |
| 92907−10100 | 15 − 7 |
| 92907−10200 | 20 − 5 |
| 92907−12100 | 19 − 8 |
| | 32 − 16 |
| 92907−12600 | 20 − 10 |
| 93101−10001 | 3 − 17 |
| 93101−12173 | 14 − 14 |
| 93101−17062 | 9 − 19 |
| 93102−20281 | 25 − 4 |
| 93102−25061 | 2 − 15 |
| 93102−26042 | 11 − 24 |
| 93103−28011 | 2 − 16 |
| 93104−14004 | 10 − 27 |
| 93106−26005 | 27 − 6 |
| 93109−08017 | 12 − 7 |
| 93109−14021 | 19 − 21 |
| 93210−07100 | 3 − 24 |

| CODIGO NO. | REF. NO. |
|---|---|
| 93210−11073 | 7 − 7 |
| 93210−14104 | 12 − 8 |
| 93210−18023 | 2 − 17 |
| 93210−21190 | 8 − 12 |
| 93306−20205 | 25 − 2 |
| 93306−20212 | 27 − 5 |
| 93306−20529 | 2 − 13 |
| | 2 − 14 |
| 93306−30212 | 27 − 4 |
| 93306−30304 | 11 − 21 |
| 93306−30411 | 11 − 22 |
| 93306−30421 | 2 − 13 |
| | 2 − 14 |
| 93310−216A3 | 2 − 10 |
| 93310−216E1 | 2 − 10 |
| 93310−42231 | 2 − 7 |
| 93311−31515 | 11 − 23 |
| 93311−41530 | 11 − 20 |
| 93315−21813 | 13 − 8 |
| 93410−20038 | 11 − 7 |
| 93410−22039 | 11 − 17 |
| 93430−08006 | 13 − 6 |
| 93430−08007 | 9 − 15 |
| 93430−10015 | 30 − 4 |
| 93440−15012 | 9 − 9 |
| | 11 − 19 |
| 93450−17025 | 2 − 12 |
| 93450−17044 | 2 − 12 |
| 93503−16003 | 9 − 13 |
| | 10 − 21 |
| 93505−32002 | 3 − 3 |
| 93603−22028 | 3 − 20 |
| 93604−12037 | 13 − 4 |
| 93604−30018 | 13 − 7 |
| 93822−15065 | 11 − 30 |
| 93822−16093 | 11 − 30 |
| 94127−210A1 | 25 − 7 |
| 94127−21779 | 25 − 7 |
| 94141−180A2 | 27 − 18 |
| 94141−18780 | 27 − 18 |
| 94225−21186 | 25 − 8 |
| 94227−21123 | 25 − 8 |
| 94235−18085 | 27 − 19 |
| 94241−18153 | 27 − 19 |
| 94325−21117 | 25 − 9 |
| 94330−18087 | 27 − 20 |
| 94330−21084 | 25 − 9 |
| 94340−18065 | 27 − 20 |

| CODIGO NO. | REF. NO. |
|---|---|
| 94416−21007 | 25 − 5 |
| 94418−18007 | 27 − 16 |
| 94580−88116 | 27 − 33 |
| 94580−88118 | 27 − 33 |
| 94680−88001 | 27 − 34 |
| 94701−00045 | 1 − 17 |
| 95027−08012 | 6 − 6 |
| 95027−08040 | 21 − 3 |
| 95301−05600 | 3 − 10 |
| 95307−05600 | 21 − 18 |
| 95307−05700 | 19 − 24 |
| | 36 − 10 |
| 95307−06600 | 10 − 19 |
| | 27 − 13 |
| | 36 − 7 |
| | 36 − 20 |
| 95307−06700 | 30 − 22 |
| 95307−10700 | 20 − 6 |
| 95604−14200 | 25 − 14 |
| | 27 − 32 |
| 95607−06100 | 37 − 3 |
| | 37 − 15 |
| 95707−06500 | 6 − 3 |
| 95707−12500 | 33 − 9 |
| | 33 − 18 |
| 95807−06010 | 21 − 20 |
| | 23 − 7 |
| | 39 − 2 |
| 95807−06012 | 24 − 4 |
| 95807−06050 | 34 − 15 |
| 95807−08012 | 6 − 5 |
| | 19 − 14 |
| 95807−08045 | 24 − 7 |
| 95827−08035 | 21 − 5 |
| 97007−06014 | 38 − 2 |
| 97007−06016 | 19 − 12 |
| | 38 − 12 |
| 97007−06020 | 30 − 21 |
| | 39 − 7 |
| 97007−06025 | 4 − 9 |
| | 4 − 23 |
| | 29 − 7 |
| 97007−08016 | 24 − 10 |
| 97007−08025 | 6 − 13 |
| 97021−06020 | 14 − 10 |
| 97027−06012 | 11 − 28 |
| 97601−04132 | 32 − 9 |
| 97701−40530 | 36 − 5 |

| CODIGO NO. | REF. NO. |
|---|---|
| 98501−03008 | 23 − 10 |
| 98501−04008 | 32 − 10 |
| 98501−04014 | 32 − 7 |
| 98502−04016 | 5 − 24 |
| 98507−03008 | 4 − 4 |
| 98507−04014 | 37 − 9 |
| 98507−04018 | 28 − 27 |
| 98507−05014 | 3 − 16 |
| 98507−05016 | 19 − 16 |
| | 28 − 34 |
| 98507−05018 | 21 − 16 |
| 98507−05020 | 37 − 16 |
| 98507−05030 | 37 − 22 |
| 98507−05035 | 19 − 25 |
| 98507−06016 | 32 − 12 |
| | 36 − 17 |
| 98507−06025 | 8 − 3 |
| | 8 − 4 |
| 98507−06030 | 8 − 9 |
| | 8 − 15 |
| | 8 − 16 |
| | 12 − 9 |
| 98507−06040 | 8 − 10 |
| 98507−06050 | 7 − 8 |
| 98507−06060 | 7 − 9 |
| 98507−06070 | 7 − 10 |
| 98507−06075 | 7 − 11 |
| 98517−06012 | 22 − 41 |
| 98707−04012 | 28 − 33 |
| 98707−06012 | 11 − 26 |
| 98707−06020 | 15 − 9 |
| 98901−04008 | 3 − 6 |
| 98907−06008 | 6 − 8 |
| | 6 − 18 |
| 99001−08600 | 3 − 21 |
| 99001−10600 | 14 − 4 |
| | 14 − 7 |
| | 14 − 17 |
| 99530−10114 | 7 − 3 |
| | 8 − 8 |
| 99530−14016 | 1 − 15 |
| 99530−20020 | 7 − 4 |